Analog & Interface Products

LINEAR
- Amplifiers
- Comparators

INTERFACE
- CAN, CAN FD, LIN
- HV Interface
- USB and I/O Expanders
- Ethernet
- Wireless
- High Speed Data/Video
- Real Time Clock/Calendar

POWER MANAGEMENT
- DC/DC Converters
- PWM Controllers
- Battery Chargers
- Power Modules
- Power MOSFET Drivers
- Power MOSFETs
- Motor Drivers
- System Supervisors Voltage Detectors
- Power Switches
- Hot Swap Power Controllers
- DDR & SCSI Terminators
- Display/LED Drivers

THERMAL MANAGEMENT
- Temperature Sensors
- Fan Control & Management

CLOCK AND TIMING
- Oscillators
- Clock Generators
- Clock & Data Distribution

MIXED SIGNAL
- A/D Converters
- Current/DC Power Measurement ICs
- Power Monitoring & Metering
- DACs & Digital Potentiometers
- Voltage References

CO & FIRE DETECTION ICs
- Smoke Detector ICs
- Piezoelectric Horn Drivers

ULTRASOUND
- Ultrasound Products

Analog & Interface Products

线性产品
- 放大器
- 比较器

接口产品
- CAN, CAN FD, LIN
- 高电压接口IC
- USB及I/O扩展器
- 以太网产品
- 无线产品
- 实时时钟/日历

电源管理
- DC/DC转换器
- PWM控制器
- 电池充电器
- 电源模块
- 功率MOSFET驱动器
- 功率MOSFET
- 电机驱动器
- 系统监控器及电压检测器
- 电源开关IC
- 热插拔控制器
- DDR & SCSI终结器
- 显示/LED驱动器

温度管理
- 温度传感器
- 风扇控制及管理

时钟与定时
- 振荡器
- 时钟脉冲发生器
- 时钟和数据分配

混合信号
- 模数转换器
- 电流/DC功率检测IC
- 功率监控及电表IC
- 数模转换器及数字电位器
- 参考电压

一氧化碳及火灾探测IC
- 烟雾探测器IC
- 压电蜂鸣器驱动器

超声波
- 超声波产品

Treelink Updates

Product Tree

The latest version of Treelink is available at www.microchip.com/treelink

Check for latest revision

Online version of Treelinnk”
www.microchip.com/treelinktool

Click for online version

Release Notes

- New Products
  - Ethernet Controller / EtherCAT Eval Boards
  - LAN9250 10/100
  - KSZ8567, KSZ9897, KSZ9567, KSZ9477
  - MCP19122/3, MCP19214/5

<< BACK

Oscillators

Product Tree

Oscillators

- **Ultra-Low Power MEMS** (<1.3mA)
- **Low-Power MEMS** (< 5mA)
- **Low-Jitter MEMS** (<1ps)
- **Ultra-Low Jitter** (<0.2ps)
- **High-Frequency TCXO**
- **Multi-Output Oscillators**
- **Oscillator Die**

<< BACK to Oscillator Tools

<< BACK

Ultra-Low Power MEMS Oscillators

Product Tree

Ultra-Low Power MEMS Oscillators

DSC6000

<< BACK

Low-Power MEMS Oscillators

Product Tree

Low-Power MEMS Oscillators

- **DSC1001**
  15pF Drive Strength
- **DSC1003**
  25pF Drive Strength
- **DSC1004**
  40pF Drive Strength

ClockWorks CONFIGURATOR

<< BACK

Low-Jitter MEMS Oscillators

Product Tree

Low-Jitter MEMS Oscillators

- **DSC1101/1121** LVSMOS
- **DSC1102/1122** LVPECL
- **DSC1103/1123** LVDS
- **DSC1104/1124** HSCL

ClockWorks CONFIGURATOR

<< BACK

Ultra-Low Jitter Oscillators

Product Tree

Ultra-Low Jitter Oscillators

- **MX55/57**
  1 Output, 200fs RMS Jitter
- **MX85**
  5 Outputs, 200fs RMS Jitter

ClockWorks CONFIGURATOR

<< BACK

High-Frequency TCXO Oscillators

Product Tree

High-Frequency TCXO Oscillators

MXT57
1 Output, 200fs RMS Jitter, ±2.5ppm

ClockWorks CONFIGURATOR

<< BACK

Multi-Output Oscillators

Product Tree

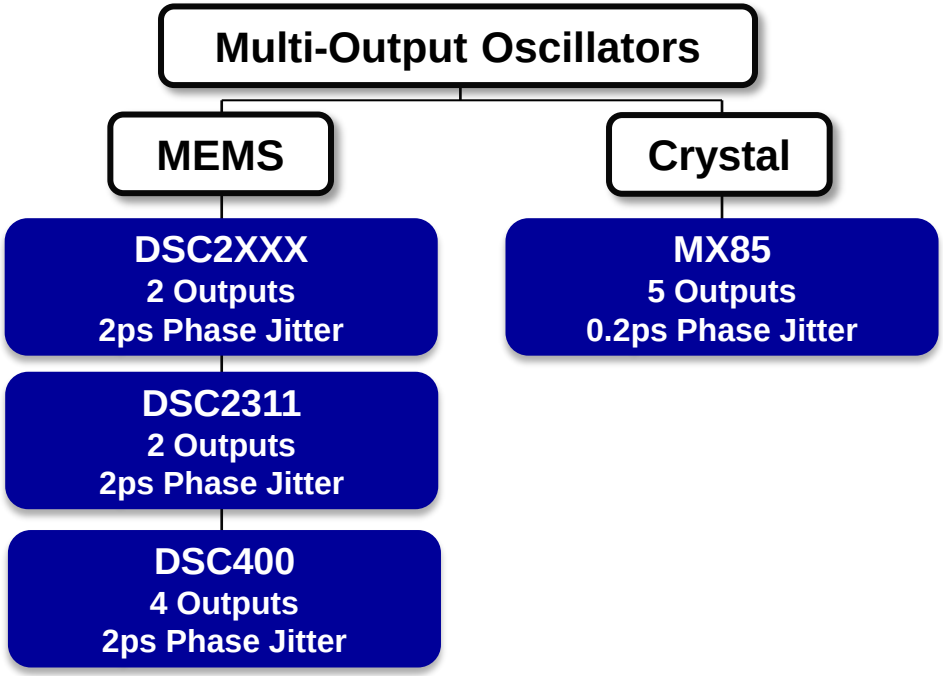

ClockWorks CONFIGURATOR

<< BACK

Oscillator Die

Product Tree

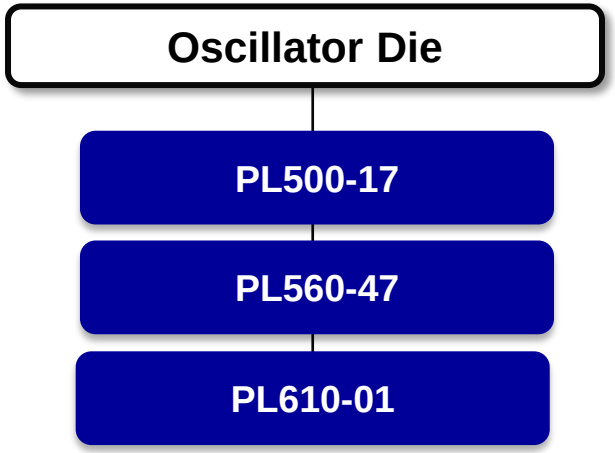

<< BACK

Clock Generators

Product Tree

Clock Generators

- **Ultra-Low Jitter** (<0.1ps)
- **Low Jitter** (1ps)
- **Low Power** (<2mA)
- **PCIe Clock Generators**
- **Clock Conditioning**
- **Clock Synthesizers**
- **Timers**

<< BACK to Clock Generator Tools

<< BACK

Ultra-Low Jitter Clock Generators

Product Tree

Ultra-Low Jitter Clock Generators

- **MX85**
  5 Outputs, Int. Resonator
- **SM802**
  8 Outputs,
  < 200fs Typ. Phase Jitter
- **SM803**
  12 Outputs,
  < 200fs Typ. Phase Jitter
- **SM813**
  8 Outputs,
  < 120fs Typ. Phase Jitter

ClockWorks CONFIGURATOR

<< BACK

Low Jitter Clock Generators

Product Tree

Low Jitter Clock Oscillators

MEMS

- **DSC2XXX**
  2 Outputs
  2ps Phase Jitter
- **DSC2311**
  2 Outputs
  2ps Phase Jitter
- **DSC400**
  4 Outputs
  2ps Phase Jitter

Crystal

- **PL602-03**
  XO, X4 Multiplier
- **PL602-37/38/39**
  XO Divider (to %16)
  Multiplier (to x32)
- **PL611-01**
  Programmable, OE, or FSEL or CLK 2
- **PL611-30**
  Programmable, SE or Diff
- **PL611-31**
  Programmable, SE or Diff w/ Long Divider

ClockWorks CONFIGURATOR

<< BACK

Low Power Clock Generators

Product Tree

Low Power Clock Generators

- **PL611-01**
  3 Outputs
- **PL611-30**
  2 Outputs
- **PL611s-02**
  2 Outputs
- **PL611s-18**
  2 Outputs
- **PL611s-19**
  2 Outputs
- **PL613-01**
  8 Outputs

ClockWorks CONFIGURATOR

<< BACK

PCIe Clock Generators

Product Tree

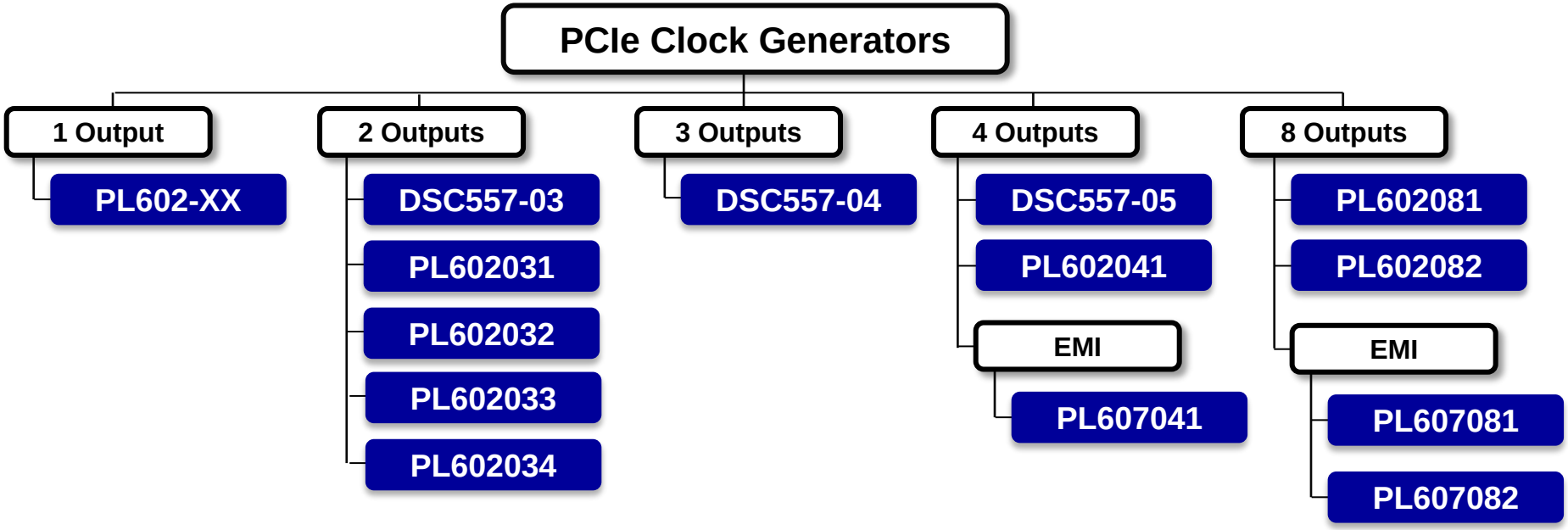

<< BACK

Clock Conditioning

Product Tree

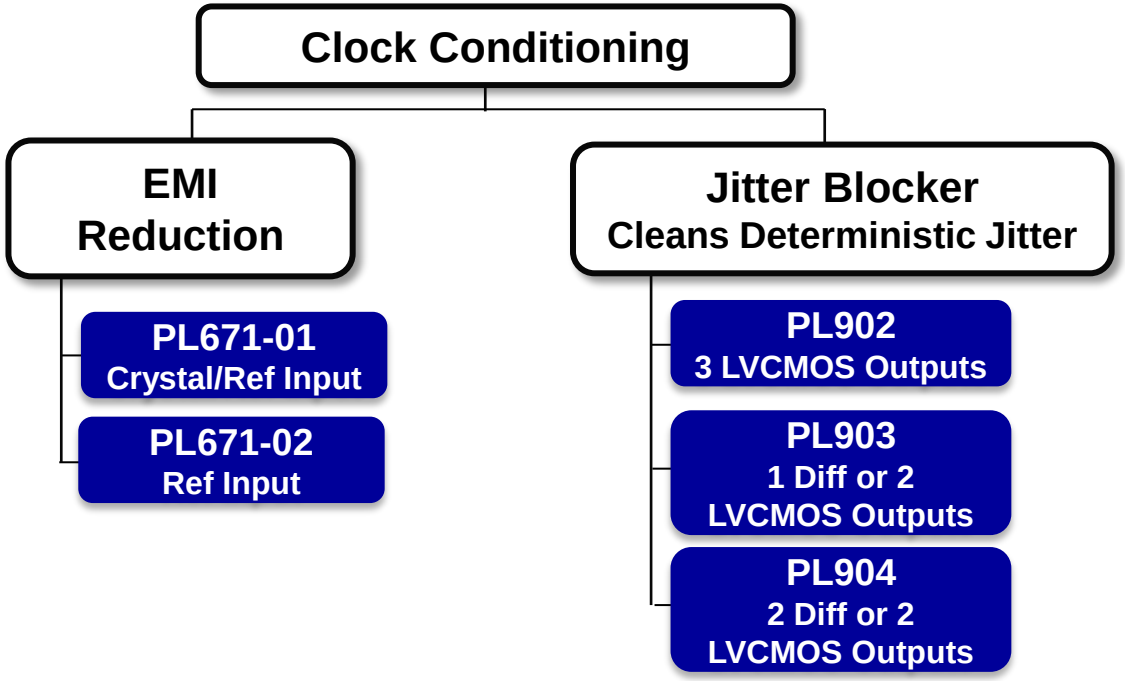

<< BACK

Clock Synthesizers

Product Tree

- **Fractional N Synthesizer**
  - **1 Output**
    - **SY87729L**
      3.3V, 10MHz to 365MHz
    - **SY87739L**
      3.3V, 10MHz to 365MHz
  - **7 Output**
    - **SY89537L**
      3 LVPECL & 4 LVDS
      87.15 to 700MHz

<< BACK

Timers

Product Tree

<< BACK

Clock & Data Distribution

Product Tree

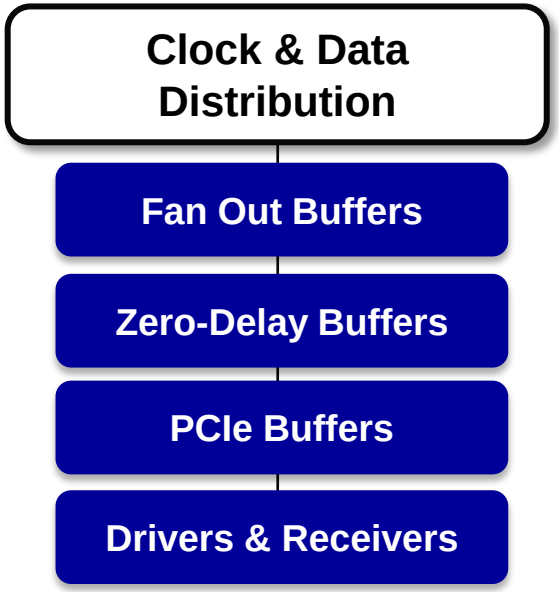

<< BACK

Fanout Buffers

Product Tree

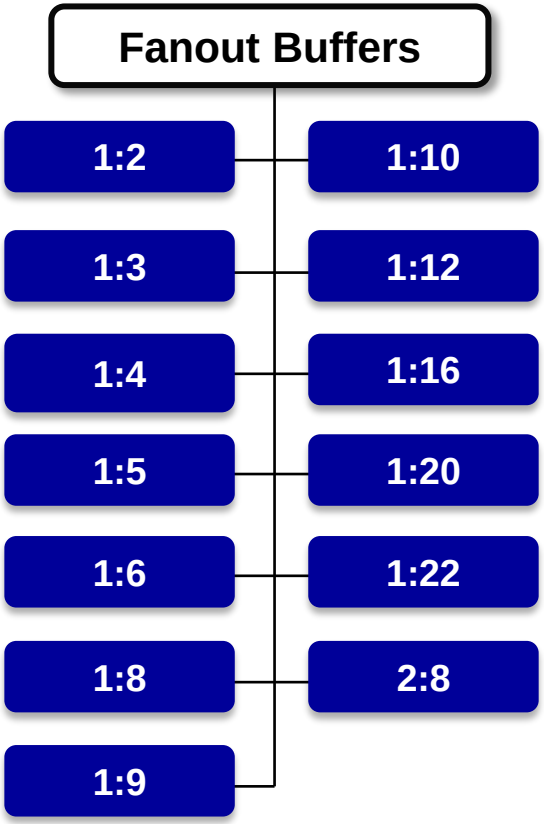

<< BACK

1:2 Fanout Buffers

Product Tree

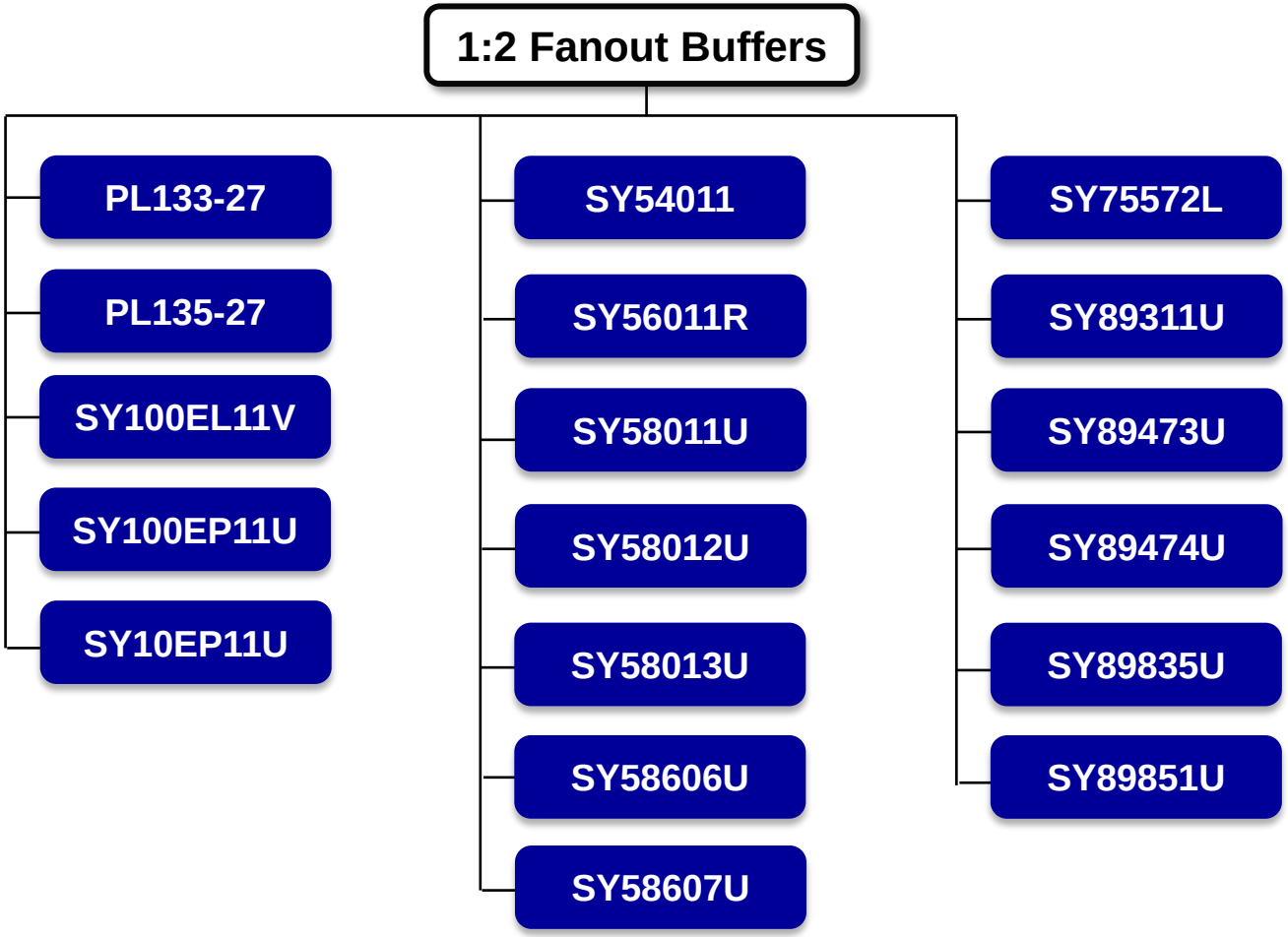

<< BACK

1:3 Fanout Buffers

Product Tree

1:3 Fanout Buffers

- PL133-37
- PL135-37

<< BACK

1:4 Fanout Buffers

Product Tree

1:4 Fanout Buffers

- PL133-47
- PL138-48
- SY100EL15L
- SY100EL16V
- SY100EP15V
- SY54020A
- SY54020R
- SY56020R
- SY58020U
- SY58021U
- SY58022U
- SY75576L
- SY89645L
- SY89830U
- SY89831U
- SY89832U
- SY89833AL
- SY89833L
- SY89834U
- SY898533L
- SY898535XL
- SY89854U

<< BACK

1:5 Fanout Buffers

Product Tree

- 1:5 Fanout Buffers
  - SY100EL14
  - SY100EP14U
  - SY89846U
  - SY89847U

<< BACK

1:6 Fanout Buffers

Product Tree

- 1:6 Fanout Buffers
  - PL133-67
  - PL135-67
  - SY58034U
  - SY58035U
  - SY58036U
  - SY89856U

<< BACK

1:8 Fanout Buffers

Product Tree

1:8 Fanout Buffers

- SY58031U
- SY58032U
- SY58033U
- SY75578L
- SY89837U
- SY89838U
- SY89858U

<< BACK

1:9 Fanout Buffers

Product Tree

1:9 Fanout Buffers

- PL133-97
- SY89809AL

<< BACK

1:10 Fanout Buffers

Product Tree

- 1:10 Fanout Buffers
  - SY100EP111U
  - SY89464U
  - SY89465U
  - SY89828L
  - SY89829U

<< BACK

1:12 Fanout Buffers

Product Tree

1:12 Fanout Buffers

- SY89112U
- SY89113U

<< BACK

1:16 Fanout Buffers

Product Tree

1:16 Fanout Buffers

SY898530U

<< BACK

1:20 Fanout Buffers

Product Tree

1:20 Fanout Buffers

- SY89467U
- SY89468U

<< BACK

1:22 Fanout Buffers

Product Tree

1:22 Fanout Buffers

- SY89825U
- SY89826L

<< BACK

2:8 Fanout Buffers

Product Tree

2:8 Fanout Buffers

SY100E310L

<< BACK

Zero-Delay Buffers

Product Tree

- Zero-Delay Buffers
  - PL102-10
  - PL123-05
  - PL123-09
  - PL123E-05
  - PL123E-09
  - MDB1900Z

<< BACK

PCIe Buffers

Product Tree

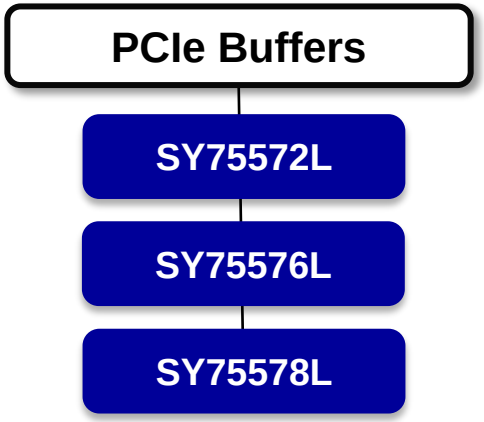

<< BACK

Drivers & Receivers

Product Tree

Drivers

- SY89850U
- SY10EP89

Receivers

- SY100EL16V
- SY100EL17
- SY58016L
- SY89251V

<< BACK

Step-Down (Buck) Internal SW 5.5V – 6V

Product Tree

- **10A**
  - MIC22950
- **7A**
  - MIC22700
  - MIC22705
- **6A**
  - MIC22600
  - MIC22601
  - MIC22602
  - MIC23603
- **5A**
  - MIC4950
- **4A**
  - MIC22400
  - MIC22405
- **3A**
  - MIC2207
  - MIC4930
  - MIC23303
  - MIC38300
  - MIC4722
  - MIC4723
  - MIC4724, 6V
- **2A**
  - MIC4720
  - MIC2267
  - MIC22200
  - MIC22205
  - MIC23150
  - MIC23153
  - MIC23155
  - MIC23201
- **1.5A**
  - MIC4721
  - MIC23156
  - MIC38150
- **1A**
  - MCP1612
  - TC105 300kHz
- **600mA**
  - MIC2202
  - MIC2204
  - MIC2205
  - MIC2206
  - MIC2285A
  - MIC23050
  - MIC23051
- **500mA**
  - MIC2245
  - MIC2285
  - MCP1601 Sync
  - MCP1602 2.0 MHz w/Power-Good
  - MCP1603 Sync
- **400mA**
  - MIC23030
  - MIC23031
- **300mA**
  - MIC2203

<< BACK

Step-Down (Buck) Internal SW Up to 75V

Product Tree

- **50V - 75V**
  - 4A
    - MIC28500, 75V
    - MIC28510, 75V
  - 3A
    - MIC28511, 60V
  - 2A
    - MIC28512, 70V
  - 0.6A
    - MCP16331, 50V
- **30V – 45V**
  - 7A
    - MIC27600
  - 4A
    - MIC28513, 45V
  - 2A
    - MIC4684, 30V
  - 2A
    - MCP16311/2, 30V
  - 0.6A
    - MCP16301H, 36V
    - MCP16301, 30V
- **26V - 28V**
  - 12A
    - MIC261201, 28V
    - MIC261203/-ZA, 28V
    - MIC26950, 26V
  - 9A
    - MIC26901, 28V
    - MIC26903/-ZA, 28V
  - 7A
    - MIC26600, 26V
  - 6A
    - MIC26601, 28V
    - MIC26603/-ZA, 28V
  - 5A
    - MIC26400, 26V
- **19V**
  - 12A
    - MIC24055/56, 19V
  - 9A
    - MIC24053/54, 19V
  - 6A
    - MIC24051/52, 19V
  - 5A
    - MIC24046, 19V
    - MIC24045, 19V I2C Bus Comm.

<< BACK

Step-Down (Buck) External SW

Product Tree

75V

- **MIC2103/4** COT, HLL, HS 3X3 QFN
- **MIC2176-1/2/3** COT, HS 100/200/300 KHZ, 10 pin MSOP
- **MIC2128** COT, HS, SS, 3X3 QFN
- **MIC2127A** 75V, COT, HLL, HS, 3X3 QFN

40V

- **MIC2130/1** VM, Low EMI 4x4mm QFN

38V

- **MIC2101/2** COT, HLL, HS 3x3 QFN

32V

- **MIC2182** CM/Skip mode, 300KHZ, low IQ, SOP
- **MIC2198** CM, 500 Khz, 4X4 QFN
- **MIC2199** CM, 300 Khz, 4X4 QFN

30V

- **MCP19035** VM, 300/600kHz, 3x3 DFN

28V

- **MIC2164/-2/-3/C,** COT, 1% Vref, 270/300/600kHz/1MHz, 10pin MSOP
- **MIC2165,** COT, 1% Vref, 600kHz, 10pin MSOP
- **MIC2166,** COT, 1% Vref, 600kHz, 10pin MSOP
- **MIC2125,** COT, 1% Vref, 600kHz, Int LDO, 10pin MSOP
- **MIC2126,** COT, HS/HLL, 200/750kHz, 0.6V vref, 3x3 QFN

18V

- **MIC2124,** CM, 1% Vref, 300kHz, 0.8V Vref, 10pin MSOP

16V

- **MCP1631HV,** Prog. Charger, 2MHz, 4x4 QFN, 20LTSSOP

15V

- **MIC2168/A,** Sych Buck, 1MHz, 10pin MSOP
- **MIC2169/A/B,** Sych Buck, 500kHz, 10pin MSOP

14.5V

2 Phase

- **MIC2155/56** 14.5V, 2 phase w/ SYNC 300/500Khz, 25A/Ø, 5X5 QFN

Dual Output

- **MIC2150/51** 14.5V, Dual Output 300/500Khz, 20A/Ø, 4X4 QFN

14V

- **MIC2183,** 2.9V to 14V 400/600Khz, W/Sync, 16L SOIC
- **MIC2184,** 2.9V to 14V non Synch 400/600Khz, W/Sync, 16L SOIC
- **MIC2193,** 2.9V to 14V 400Khz, 100% Duty cycle, 8L SOIC
- **MIC2194,** 2.9V to 14V, Non Synch 400Khz, 100% Duty cycle, 8L SOIC

6V

- **MIC2111B** Multi-mode, Driverless 0.6V vref, 200Khz/2Mhz 3x3mm QFN

<< BACK

Step-Down (Buck) Multi-Output

Product Tree

- 15V
  - 2.5A / 2.5A
    - MIC24420/1
- 6V
  - 2A / 2A
    - MIC4782
- 5.5V
  - 2A / 2A / 2A
    - MIC23450
    - MIC23451
  - 2A / 2A
    - MIC23158/9
    - MIC4744
    - MIC4742
  - 800mA/800mA
    - MIC2238
    - MIC2230
  - 400mA/400mA
    - MIC23254
    - MIC23250

<< BACK

Step-Up (Boost) Internal SW

Product Tree

40V $V_{OUT} \leq 65V$

- **MIC2171, 2.5A**
- **MIC2172, 1.25A**
  f_{SW} SYNC pin
- **MIC3172, 1.25A**

20V $V_{OUT} \leq 40V$

- **MIC2601/2, 1.2A**
  1.2MHz/2MHz
- **MIC2605/6, 0.5A**
  Int. Schottky
  1.2MHz/2MHz

16V $V_{OUT} \leq 16V$

- **MIC2145, 0.9A**
  Pgm I-Limit

15V $V_{OUT} \leq 36V$

- **MIC2570, 1A**
  f_{SW} SYNC pin
- **MIC2571, 1A**
  V_{IN}(min)=0.9V
  f_{SW} SYNC pin

14V $V_{OUT} \leq 22V$

- **MIC2141, 1A**
  DAC-controlled V_{OUT}

10V $V_{OUT} \leq 34V$

- **MIC2253, 3.5A**
  $V_{OUT} \leq 30V$
- **MIC2288, 1.2A**
- **MIC2290, 0.75A**
  Int. Schottky
- **MIC2295, 1.2A**
  1.2MHz
- **MIC2296, 1.2A**
  600kHz

6.5V

- **MIC2619, 0.35A**

5.5V $V_{OUT} \leq 5.5V$

- **MIC2875, 4.8A** *
  BM, TLD
  Min f_{SW} = 45kHz
- **MIC2876, 4.8A** *
  BM, TLD
- **MCP1623/4, 0.425A** *
  TLD, Startup @ 0.65V
- **MCP16251/2, 0.65A** *
  I_Q=4µA
  TLD (16251), IB (16252)
- **MCP1640/B/C/D,0.8A** *
  Startup @ 0.65V
  TLD (1640/B), IB (1640C/D)
- **MCP1642B/D, 1.8A** *
  Startup @ 0.65V
  TLD (1642B), IB (1642D)

5.5V $V_{OUT} \leq 37V$

- **MIC2250, 2A**
  Dithering, $V_{OUT} \leq 32V$
- **MIC2251, 2A**
  Dithering, $V_{OUT} \leq 37V$
- **MCP1661, 1.3A**
  $V_{OUT} \leq 32V$
- **MCP1663 1.8A**
  $V_{OUT} \leq 32V$

* = Synchronous
= Light Load Mode (HLL/PFM)
BM = Bypass Mode
IB = Input Bypass (shutdown)
TLD = True Load Disconnect (shutdown)

<< BACK

Boost/SEPIC/Flyback/Forward & Push-Pull Controllers

Product Tree

- Offline Controllers
  - Push-Pull
    - MIC3808/9
    - MIC3838/9
  - Forward / Flyback
    - MIC38C42/43/44/45
    - MIC38C42A/43A/44A/45A
    - MIC38HC42/43/44/45
  - 180V
    - 1A
      - MIC9130
      - MIC9131
- Boost, SEPIC, Flyback
  - 5.5V
    - MCP1630 / V
    - MCP1631 / V
    - MCP1632
  - 16V
    - MCP1631HV / VHV
- Boost
  - From $2.7V_{IN}$, 6V to $500V_{OUT}$
    - HV9150
  - 14V
    - MIC2185
    - MIC2186
    - MIC2196
- High Voltage Flyback
  - 80V
    - HV9112
  - 120V
    - HV9110
    - HV9113
  - 450V
    - HV9120
    - HV9123

<< BACK

Low Dropout Regulators 6V – 8V Input

Product Tree

5A
- MIC37501/2, 7pin SPAK
- MIC49500, 1.4Vin 7pin SPAK

3A
- MIC49300, 1.4Vin 5pin SPAK
- MIC47300, 1.4Vin 5pin TO252
- MIC35302, adj 5pin SPAK DDPAK
- MIC37300/1/2/3, Rev Current prot. SOIC, SPAK, VDFN

2 - 2.5A
- MIC37252, 2.5A
- MIC49200, 1.4Vin, 83dB 5pin SPAK

1.5A
- MIC37150/1/2/3, rev batt and curr prot
- MIC47150,1.4Vin, adj 5pin TO-252
- MIC49150, 1.4Vin, 5pin TO-252
- MCP1727 DFN8
- MCP1827/S TO220, DDPAK

1A
- MIC37100/1/2, rev batt. Curr. Prot. SOT223-3, SOIC8, SPAK
- MCP1726, DFN8
- MCP1826/S, TO220

800mA
- TC1264/5
- TC2117, 80uA Iq

750mA
- MIC3775

500mA
- MCP1725, 2.3Vin, 0.5% acc. DFN8, SOIC8
- TC1262/3, 80 uA Iq, TO-220, SOT-223
- MCP1825/S, 2.1Vin, 60dB, TO220, DDPAK, SOT223

300mA
- MIC5249, MSOP8
- MIC5259, 1.5% acc. 70 dB VDFN
- MIC5318, 110mV Vdo, 75dB, UDFN6
- TC1107/8, 50uA Iq, MSOP8
- TC1173/4, MSOP SOIC8
- TC1269, 0.5% acc. MSOP
- MCP1824/S, 2.1Vin, 0.4% acc. SOT23, SOIC, SOT223
- MIC5353, 60dB, UDFN6

250mA
- MCP1700, TO-92, SOT-89, SOT23

150mA
- MIC5247, SOT23-5/6, VDFN6
- MIC5248, 63dB, VDFN6, SOT23-5
- MIC5238, 1.5Vin, 23uA Iq, SOT23-5
- MIC5252, 135mV Vdo, VDFN6, SOT23-5
- MIC5255, VDFN6, SOT23-5
- MIC5256, SOT23-5
- MIC5258, 85uA Iq, SOT23-5
- MIC5317, 32uA Iq, 80dB, DFN4, SOT23-5
- MCP1711, 0.6uA, capless DFN4
- TC1185/6/7, 0.5% acc. SOT23-5
- TC2185/6, 0.4% acc, SOT23-5
- TC1017, 53uA Iq, SC-70, SOT23-5
- TC1188/9, 120mA Iout

100mA
- TC1016, 80mA
- TC1015/55/71, 0.5% acc, SOT23-5
- TC2015/55, 0.4% acc. SOT23-5
- TC1073, 64dB, SOT23-6
- TC1224, SOT23-5

50mA
- TC1014/54/70, 64 dB, SOT23-5
- TC1072, SOT23-6
- TC2014/54, 0.4% acc. SOT23-5
- TC1223

10mA
- MIC5232, 7V

<< BACK

Low Dropout Regulators 12V – 16V Input

Product Tree

- **7.5A**
  - MIC29712
- **5A**
  - MIC29510/2, load dump, rev curr prot. TO220
  - MIC39500/1, 400mV Vdo, Rev batt, curr prot, TO263
- **3A**
  - MIC29302A, adj, rev batt, curr prot. DDPAK, TO252
  - MIC29310/12, load dump, rev curret prot, TO220
  - MIC39300/1/2, 2.25Vin, 385mV Vdo, TO220, DDPAK
- **1.5A**
  - MIC39150/1/2
- **1A**
  - MIC39100/1/2
- **750mA**
  - MIC3975
- **500mA**
  - MIC5209, 75dB VDFN8, SOIC, SOT223
  - MIC5237, Rev batt prot, TO263, TO220
  - MIC5216, 12V, MSOP, SOT23
  - MIC5219, 12V, UDFN6, SOT23
- **300mA**
  - MCP1755/S 16V
- **250mA**
  - MCP1702 13.2V
  - MCP1703A 16V
  - MCP1754/S 16V, High PSRR
- **180mA**
  - MIC5207
- **150mA**
  - MIC5205, SOT23-5
  - MIC5206, MSOP, SOT23-5
  - MIC5225, 29 uA Iq, SOT23-5
- **80mA**
  - MIC5203, SOT143-4, SOT23-5
  - MIC5213, SC70-5
- **10mA**
  - MIC5231, 12V
- **LDO Combo ICs**
  - TC1300, baypass, delay reset, MSOP8
  - TC1307, quad LDO, QSOP16
  - TC1303/4 LDO + Switcher
  - TC1313 LDO + Switcher

<< BACK

Low Dropout Regulators 24-120V

Product Tree

- **120V**
  - 150mA
    - MIC5283
  - 50mA
    - MIC5282
  - 25mA
    - MIC5281, 90dB, MSOP8
    - MIC5280, 4.5Vin, SOIC8
- **Automotive* 120V**
  - 150mA
    - MAQ5283
  - 50mA
    - MAQ5282
  - 25mA
    - MAQ5281, 90dB, MSOP8
    - MAQ5280, 4.5Vin, SOIC8
- **30V - 36V**
  - 500mA
    - MIC5239, 30V
  - 250mA
    - MIC2954, 30V
  - 150mA
    - MIC5234, adj, 20uA Iq, SOIC8
    - MIC5236, 300mV Vdo, SOIC8, MSOP8
    - MIC2951, 2Vin, MSOP8, SOIC8, PDIP8
  - 100mA
    - MIC5233, 18uA Iq, SOT223, SOT23
    - LP2951, 0.5% acc. 70dB, SOIC8, PDIP8
  - 70mA
    - MCP1790/1* 30V Automotive
- **24V - 26V**
  - 5A
    - MIC29500/1/2/3
  - 3A
    - MIC29300/1/2/3
  - 1.5A
    - MIC29150/1/2
  - 1.25A
    - MIC2940A/41A
  - 750mA
    - MIC2937A/1/2
  - 400mA
    - MIC2920A/1/2/4
  - 200mA
    - MIC5201
  - 150mA
    - MIC5235, 18uA Iq, SOT23-5
    - MIC5295 50dB, TO252-5
    - MCP1804, 28V
  - 100mA
    - MIC5200

<< BACK

* Please refer to our Microchip Automotive Recommended Product Selector Guide for additional LDOs for AEC-Q100 status

Low Dropout Regulators -16V – 5.5V

Product Tree

5.5V

- 5A
  - MIC69502
- 4A
  - MIC68400
  - MIC68401
- 3A
  - MIC69301/2/3
- 2A
  - MIC68200
- 1.5A
  - MIC69153
- 1A
  - MIC69101/3
- 500mA
  - MIC5319, 70dB, VDFN6, SOT23-5
  - MIC5524, 38uA Iq, UDFN4
  - MIC5528, 70dB, UDFN6
- 400mA
  - MIC5325
- 300mA
  - MIC5323 80dB, UDFN6/SOT23
  - MIC5363/4 80dB, UDFN6
  - MIC5303 100mV Vdo, UDFN4
  - MIC5307, 20uA Iq, SOT23-5
  - MIC5309 1.7Vin, 90dB, UDFN/SOT23
  - MIC5327 0.5% acc. UDFN4
  - MIC5337 UDFN4
  - MIC5501/2/3/4 1x1DFN
  - MIC5512/4, UDFN6
  - MAQ5300 Q100
- 200mA
  - MIC5367/8
- 150mA
  - MIC5265 UDFN6
  - MIC5301 40mV Vdo, UDFN6
  - MIC5302, 50mV Vdo, UDFN4
  - MIC5304, 0.5% acc. UDFN6
  - MIC5305, 60mV Vdo, 85dB, VDFN6
  - MIC5306, 45mV, 16uA, SOT23-5
  - MIC5308, 90dB, UDFN6
  - MIC5365/66 32 uA, 80 dB, UDFN4
  - MIC5376/7/8 UDFN
  - MCP1810 20nA Iq, DFN
- 100mA
  - MIC5253

3.6V – 3.8V

- 3A
  - MIC59300, DDPAK
  - MIC61300, VDFN10
- 1.5A
  - MIC59150, SOIC8
  - MIC61150, VDFN10
- 1A
  - MIC47100, 3.6V
- 500mA
  - MIC47050 44mV, 6uA, VDFN6
  - MIC47053 44mV, 6uA, UDFN8

-16V

- 100mA
  - MIC5270
  - MIC5271

<< BACK

Dual Output Linear Regulators

Product Tree

- 5.5V
  - 2A
    - MIC68220
  - 500mA
    - MIC5355
    - MIC5356
    - MIC5357
  - 200mA
    - MIC5388/9
  - 150mA / 300mA
    - MIC2210
    - MIC2211
    - MIC2212
    - MIC2213
    - MIC2214
    - MIC2219
    - TC1301/2
  - 150mA
    - MIC5310
    - MIC5320
    - MIC5321
    - MIC5322
    - MIC5370/1
    - MIC5380/1
    - MIC5264
    - MIC5392/3
  - 300mA
    - MIC5311
    - MIC5312
    - MIC5315
    - MIC5316
    - MIC5330
    - MIC5331
    - MIC5332
    - MIC5333
    - MIC5335
    - MIC5338/9
    - MIC5396/7/8/9
  - 300mA / 500mA
    - MIC5350
- 16V
  - 500mA
    - MIC5212
  - 150mA
    - MIC5210
  - 80mA
    - MIC5211
  - 50mA
    - MIC5208
- 26V
  - 100mA
    - MIC5202

<< BACK

Multi-Output LDOs

Product Tree

- **5.5V**
  - **200mA / 200mA / 200mA / 1mA**
    - **MIC5374** Active High Enable
    - **MIC5384** Active Low Enable
  - **250mA / 250mA / 250mA**
    - **MIC2215**
  - **200mA / 200mA / 200mA**
    - **MIC5373/83**
  - **150mA / 150mA / 150mA**
    - **MIC5385** 2x2 DFN
    - **MIC5387** 1.6x1.6 DFN

<< BACK

Linear Regulator Controllers

Product Tree

36V

- **MIC5156/57/58**
  8pin DIP/SOP, 14pin DIP/SOP

5.5V

- **MIC5159**
  Prog. Iout, up to 10A. SOT23-6
- **MIC5190**
  Ultra High Speed, 10A. 3x3 DFN, MSOP10
- **MIC5191**
  Ultra High Speed, High Current Active Filter 3x3 DFN, MSOP10

<< BACK

Linear Power Filters Ripple Blocker™

Product Tree

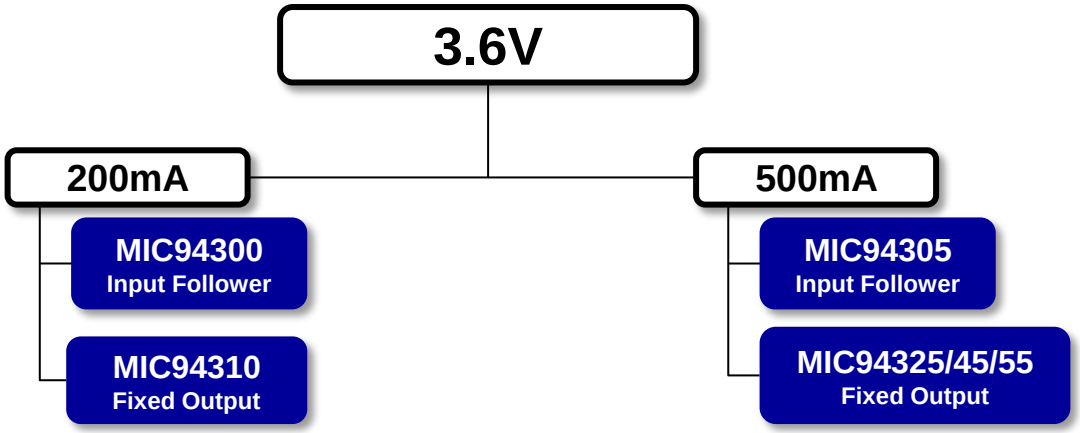

<< BACK

Power Modules

Product Tree

Low Voltage V_{IN} = 2.7V to 5.5V

- **3A HeLDO™**
  - **MIC38300** Low Noise, 4X6mm
- **1.5A HeLDO™**
  - **MIC38150** Low Noise, 4X6mm
- **1.2A**
  - **MIC33153** Low Ripple, 3X3.5mm
- **600mA**
  - **MIC33050** Low Ripple, 3X3mm
  - **MIC3385** 8 Mhz, Light load LDO mode, 3X3.5mm
- **400mA**
  - **MIC33030** 8Mhz Ultra Fast, 2.5X2mm

Medium Voltage V_{IN} = 4.5V to 26V

- **14A**
  - **MIC45212** 200-600Khz Hyper speed, Light load, 12x12x4mm
- **10A**
  - **MIC45208** 200-600Khz Hyper speed, Light load, 10x10x3mm
- **6A**
  - **MIC45205** 200-600Khz Hyper speed, Light load, 8x8x3mm
  - **MIC45116** 600Khz Fixed Hyper speed, Light load, 8x8x3mm
- **5A**
  - **MIC45404** 19V, Low Profile, Pin selectable VOUT 10x10x2mm

High Voltage V_{IN} = 4.5V to 50V

- **3A**
  - **MIC28303** 200-600Khz, 50V Hyper speed, Light load, 12x12x3mm

High Voltage V_{IN} = 4.5V to 70V

- **3A**
  - **MIC28304** 200-600Khz, 70V Hyper speed, Light load, 12x12x3mm

<< BACK to Power Modules Demo & Eval Boards

<< BACK

PMICs

Product Tree

5.5V

MIC7401
Configurable PMIC, five-channel 4MHz buck regulators, one 2MHz boost regulator, I²C Control, global enable

MIC7400
Configurable PMIC, five-channel 4MHz buck regulators, one 2MHz boost regulator, I²C Control

MIC2225
Digital PMIC, 2MHz DC/DC converter w/LDO and independent enable

MIC23060
4MHz 600mA DC/DC Regulator w/300mA LDO, sequencing feature

MIC2800
Digital PMIC, 2MHz DC/DC converter w/2 LDOs

MIC2807
RF PMIC, 600mA DC/DC w/DAC output to PA, 200mA RF LDO, 30mA PA LDO

MIC2826
4MHz DC/DC HyperLight Load® with Dynamic Voltage Scaling and 2 LDOs

MIC2821
Digital PMIC, 2MHz DC/DC with 3 LDOs

MIC2811
Digital PMIC, 2MHz DC/DC with 3 LDOs

MIC2810
Digital PMIC, 2MHz with 2 LDOs. LDO1 has a separate VIN pin

1.6V

MIC23099
Single AA/AAA Cell Step-Up/Step-Down Regulators with Battery Monitoring

<< BACK

Half-Bridge MOSFET Drivers

Product Tree

- **600V**
  - MIC4608
- **100V**
  - MIC4100/1 2A/2A Peak Current
  - MIC4102 2A/2A Peak Current Adaptive Dead Time
  - MIC4103/4 3A/2A Peak Current
- **85V**
  - MIC4604
  - MIC4605 Adaptive Dead Time
- **36V**
  - MCP14700
  - MCP14628 Adaptive Dead Time
- **28V**
  - MIC4600 Internal LDO Programmable Dead Time

<< BACK

Full-Bridge MOSFET Drivers

Product Tree

85V

MIC4606

<< BACK

Three-Phase MOSFET Drivers

Product Tree

- 3 Phase Drivers
  - 85V
    - MIC4607
  - 600V
    - MIC4609

<< BACK

MOSFET Drivers High/Low Side

Product Tree

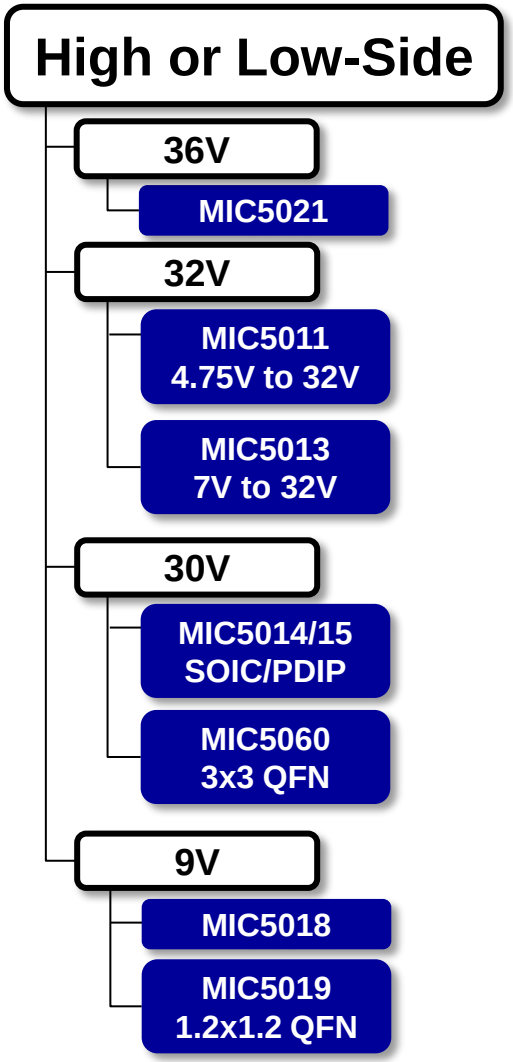

<< BACK

Single Output MOSFET Drivers Low-Side

Product Tree

- 50V
  - MIC5020
- 30V
  - 1.5A
    - TC4431/2
- 20V
  - 6A
    - MIC4120/9
- 18V
  - 12A
    - MIC4451/2 ★
    - TC4451/2 Cost Sensitive
  - 9A
    - MIC4421A/2A ★
    - TC4421A/2A Cost Sensitive
  - 6A
    - MCP1406/7
    - MIC4420/9
    - MCP14A0601/2 Low Logic Thresholds Enable ★
  - 4.5A
    - MCP14A0451/2 Low Logic Thresholds Enable ★
  - 1.5A
    - MIC4414/5 1.2x1.2 QFN
    - MCP1415/6 SOT-23
    - MCP14A0151/2 Low Logic Thresholds Enable ★
  - 1.2A
    - MIC4416/7
  - 0.5A
    - MCP1401/2
    - MCP14A0051/2 Low Logic Thresholds Enable ★
- 16V
  - 3A
    - TC1413N
  - 1.2A
    - TC1412N
  - 1A
    - TC1411N
  - 0.5A
    - TC1410N
- 13V
  - 6A
    - MIC44F18/19/20
- 6V
  - 2A
    - TC4626/7

★ = Preferred option within similar products

<< BACK

Dual Output MOSFET Drivers Low-Side

Product Tree

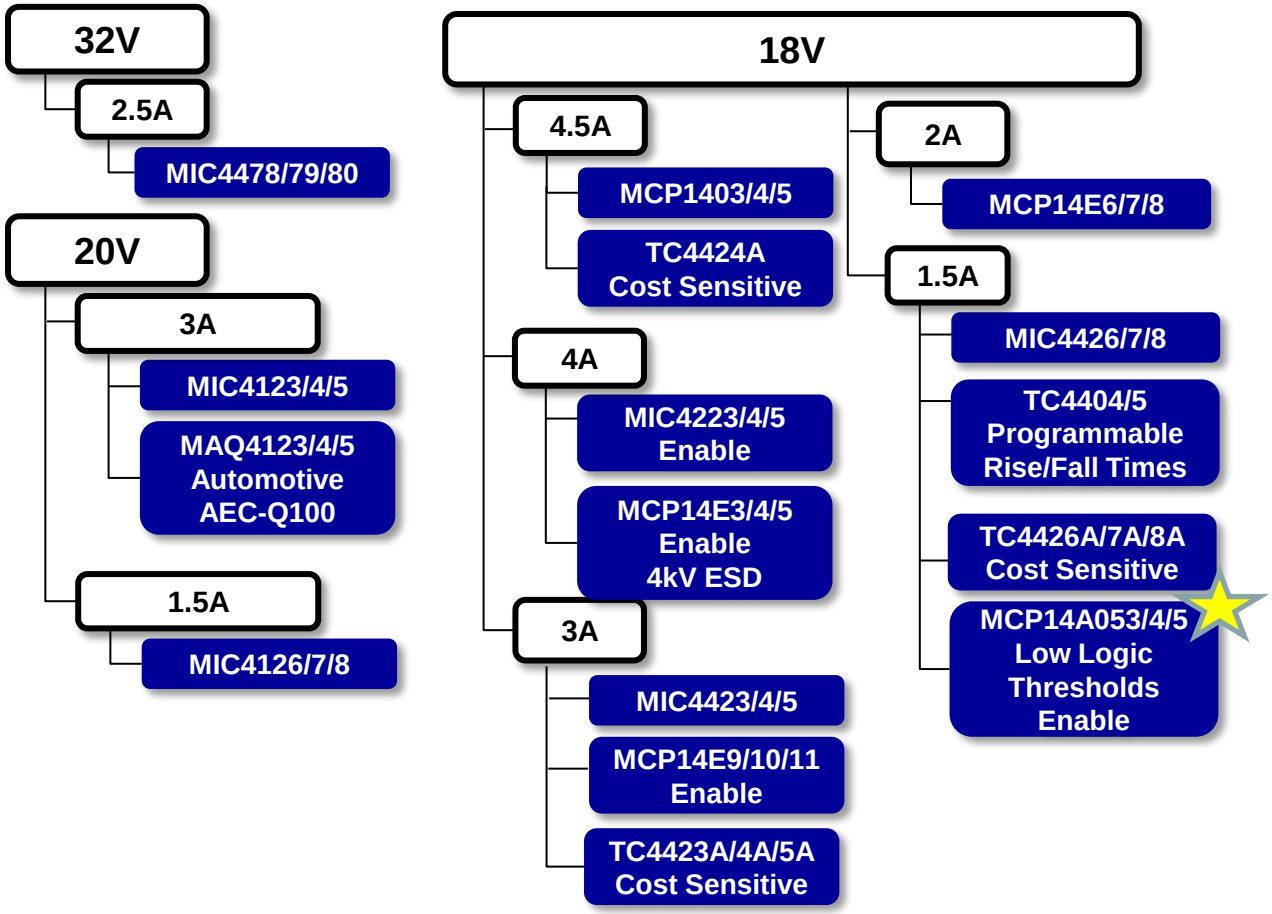

= Preferred option within similar products

<< BACK

Quad Output MOSFET Drivers Low-Side

Product Tree

- 18V
  - 1.2A
    - MIC4467/8/9
    - TC4467/8/9

<< BACK

Hot Swap / Power Controllers

Product Tree

- **Low Voltage (<16V)**
  - 2 Outputs
    - MIC2584
  - 1 Output
    - MIC2085/6
    - MIC2582/3/3R
    - MIC2310
- **High Voltage (>16V)**
  - 1 Output
    - MIC2587
    - MIC2588/94
    - MIC2595
- **Compact PCI/PCI-X/PCI Express**
  - 6 Outputs
    - MIC2342
    - MIC2591B

<< BACK

DDR / SCSI Terminators

Product Tree

- DDR
  - 6V
    - ± 7A
      - MIC5162
      - MIC5163
      - MIC5164
      - MIC5165
  - 5.5V
    - ± 6A
      - MIC5167
  - 3.6V
    - ± 3A
      - MIC5166
- SCSI
  - MIC5204

<< BACK

LED Backlight Drivers

Product Tree

- **Off Line**
  - HV9911, 250V
  - HV9912, 100V
  - HV9961, 450V
  - HV9963 SEPIC
  - HV9967B, Int SW
  - HV9980, 3CH
- **40V**
  - I_{LIM} = 2.4A
    - MIC3263 6CH Boost
    - HV9985 3-Ch SEPIC
- **20V**
  - I_{LIM} = 3.5A
    - MIC3223
- **15V**
  - I_{LIM} = 750mA
    - MIC2282
    - HV9803 ±2% accuracy
- **10V**
  - I_{LIM} = 4.75A
    - MIC2298, 1MHz
    - MIC2299, 2MHz
  - I_{LIM} = 1.7A
    - MIC2297, 600kHz
  - I_{LIM} = 1.2A
    - MIC2291, 1.2MHz
  - I_{LIM} = 750mA
    - MIC2287, 1.2MHz
    - MIC2287C, 1.2MHz
    - MIC2289, Int Diode
    - MIC2289C, Int Diode
    - MIC2292/3, 1.6MHz
    - MIC2292C/3C, 2MHz
- **7V**
  - I_{LIM} = 750mA
    - MIC3289, diode
  - I_{LIM} = 350mA
    - MIC3287, Vo=36

<< BACK

General Purpose & Automotive LED Drivers

Product Tree

Off Line

- HV9801A 4-Level Switch
- HV9805 PFC + Linear
- HV9861A +/-3% accuracy
- HV9910B Vin = 8 to 450V
- HV9910C Vin = 15 to 450V
- HV9921/2/3 3-pin, Fixed IO
- HV9925 Programmable IO
- HV9930 Hysteric
- HV9931 Single SW PFC
- HV98100/101 PFC Buck-Boost

Internal SW

- 1A Buck
  - MIC3202/-1, 37V
  - MIC3201, 20V
- 700mA Buck
  - HV9918 PWM Dimming
- Boost
  - MCP1643 1 MHz, 1.6A
  - MCP1662 500 kHz, 1.3A
  - MCP1664 500 kHz, 1.8A

External SW

- Boost
  - MIC3230/1/2, 45V
- Buck
  - MIC3203/-1, 42V
  - MIC3205, 40V
  - HV9919B PWM Dimming
  - HV9803B, 16V

Automotive

- Buck
  - AT9919, 2MHz
  - MAQ3203, 42V
- Ćuk & SEPIC
  - AT9917, 40V
  - AT9932, Low EMI
  - AT9933, 75V

<< BACK

Linear LED Drivers

Product Tree

5.5V

- 6 LEDs @ 100mA
  - MIC4812
- 6 LEDs @ 50mA
  - MIC4811
- 6 LEDs @ 20mA
  - MIC2843, PWM
    MIC2843A, DAM™
  - MIC2844A, 1-wire
  - MIC2846A, LDO
- 4 LEDs @ 20mA
  - MIC2841A, PWM
  - MIC2842A, 1-wire
- 2 LEDs @ 30.2mA
  - MIC2860-2D, 1-wire
  - MIC2860-2P, PWM
- 1 LED @ 800mA
  - MIC4802
- 1 LED @ 600mA
  - MIC4801

Sequential Linear

- CL8800, 6-Stage, $230V_{AC}$, QFN-33
- CL8801, 4-Stage, $230V_{AC}$, QFN-33
- CL88020, 4-Tap, $120V_{AC}$, SOIC-8 EP

<< BACK

Camera Flash Drivers & Display Drivers

Product Tree

- **Display Drivers**
  - 11V
    - MM5450/1
  - 5.5V
    - MIC5400
- **Flash Drivers**
  - 5.5V, 1.2A
    - MIC2874, 1-wire CSP
    - MIC2873, I^2C CSP
    - MIC2871, 1-wire DFN
  - 5V, 1.5A
    - MIC2870, I^2C DFN

<< BACK

Single & Dual High-Side Power Switches

Product Tree

- **Single 13.5V**
  - 1A
    - MIC94030
- **Single 5.5V**
  - 7A
    - MIC95410
  - 3A
    - MIC94161/2/3/4/5
    - MIC94040/1/2/3
    - MIC94044/5
  - 2A
    - MIC94052/3
    - MIC94060/1/2/3
    - MIC94064/5
    - MIC94080/1/2/3/4/5
  - 1.8A
    - MIC94050/1
  - 1.2A
    - MIC94070/1/2/3
    - MIC94090/1/2/3/4/5
- **Dual 5.5V**
  - 2A
    - MIC94066/7/8/9

<< BACK

USB Power Switches

Product Tree

Single 5.5V

- Adj. to 6A
  - MIC2044/45
- Adj. to 3A
  - MIC2545A/49A
  - MIC2042/43
- Adj. to 2.5A
  - MIC2039
- Adj. to 2A
  - MIC2007/17
    MIC2008/18
    MIC2009/19
- Adj. to 1.5A
  - MIC2544/48
  - MIC2544A/48A ★
  - MIC2040/41
- Adj. to 0.9A
  - MIC2009A
- 0.5A, 0.8A, 1A, 1.2A
  - MIC2033
- 0.5A, 0.8A, 1.2A
  - MIC2003/13
    MIC2004/14
    MIC2005/15
- 0.5A, 0.9A, Adj. to 1.1A
  - MIC2095/7/8/9
- 500mA
  - MIC2025/75
- 100mA
  - MIC2091
- 50mA
  - MIC2090

Single 13.5V

- 400mA
  - MIC2514

Single 7.5V

- 2A
  - MIC2505/-1/-2

Quad 5.5V

- 500mA
  - MIC2027/77
- 100mA
  - MIC2537

Dual 7.5V

- 1A
  - MIC2506

Dual 5.5V

- 3A
  - UCS2112
  - UCS2113 ★
- Adj. to 1.5A
  - MIC2546/47
- 500mA
  - MIC2026/76
  - MIC2026A/76A ★
- 100mA
  - MIC2536

★ = Preferred option within similar products

<< BACK

USB Transceivers

Product Tree

USB Transceivers

- MIC2550A
- MIC2551A
- MIC2551A-2.5
- MIC2555

<< BACK

PCMCIA / CableCARD

Product Tree

- Single Slot
  - MIC2560
  - MIC2561
  - MIC2562A
  - MIC2569
  - MIC2557
- Dual Slot
  - MIC2563A
  - MIC2558

<< BACK

Voltage References

Product Tree

- $5V_{DD}$
  - ± 0.10%
    - MCP1501
  - ± 1%
    - MCP1524/41
- $10V_{DD}$
  - ± 1%
    - MIC4043
- $15V_{DD}$
  - ± 0.5%
    - LM4040/1C
  - ± 1%
    - LM4040/1D

<< BACK

DACs & Digital Potentiometers

Product Tree

D/A Converters

Products

Digital Potentiometers

Products

<< BACK

Ultrasound MOSFET Products

Product Tree

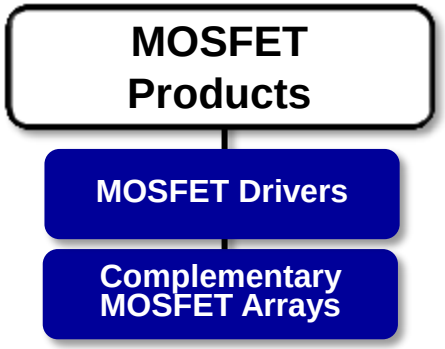

<< BACK

High Voltage Interface

Product Tree

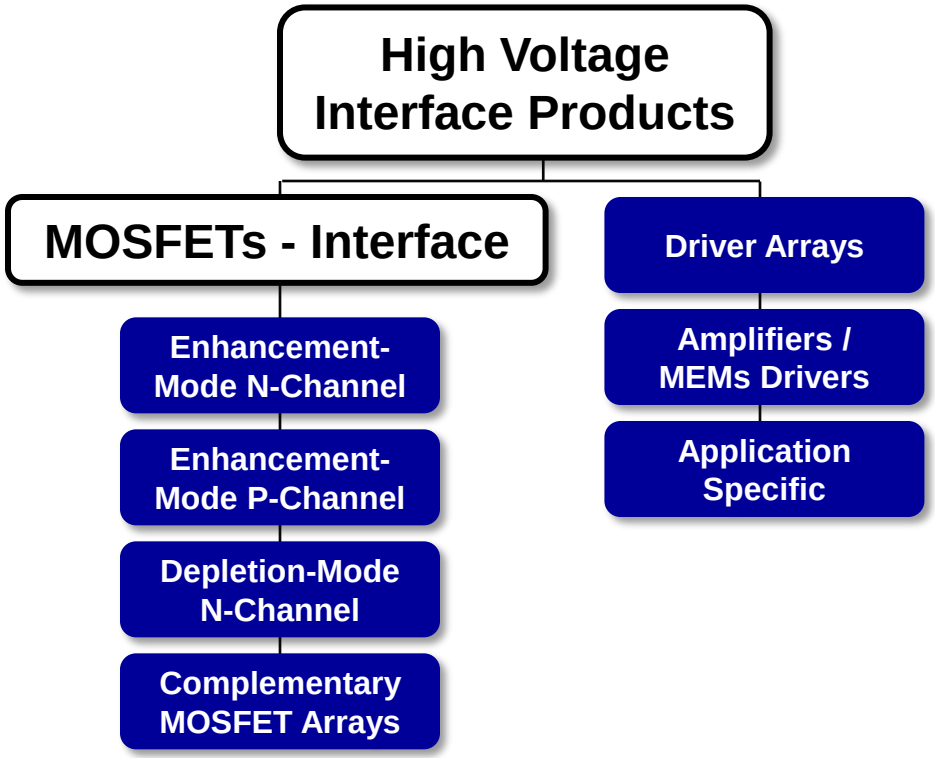

<< BACK

Display/LED Drivers

Product Tree

Display and LED Drivers

- Electroluminescent Backlight Drivers
- LED Backlight Drivers
- Linear Current Regulators
- Linear LED Drivers
- General Purpose and Automotive LED Drivers
- Camera Flash Drivers and Display Drivers

<< BACK to Display and LED Demo & Eval Boards

<< BACK

Analog-to-Digital Converters

Product Tree

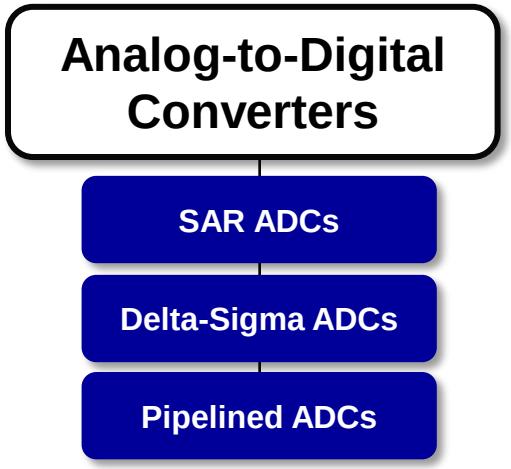

<< BACK

Pipelined A/D Converters

Product Tree

Standard Pipelined ADCs

- **16-bit**
  - MCP37231-200
    200 Msps, 8-ch mux
- **14-bit**
  - MCP37221-200
    200 Msps, 8-ch mux
  - MCP37220-200
    1-ch, low power
- **12-bit**
  - MCP37211-200
    200 Msps, 1,2,4,8-ch
  - MCP37210-200
    1-ch, low power

ADC with Integrated Digital Down-converter

- MCP37D31-200
  200 Msps, 16-bit, 8-ch mux
- MCP37D21-200
  200 Msps, 14-bit, 8-ch mux
- MCP37D20-200
  200 Msps, 14-bit, 1-ch low pwr
- MCP37D11-200
  200 Msps, 12-bit, 1,2,4,8-ch
- MCP37D10-200
  200 Msps, 12-bit, 1-ch low pwr

<< BACK to ADC Demo & Eval Boards

<< BACK

Complementary MOSFET Arrays

Product Tree

N-Channel

TD9944
240BV_{DSS}, 6Ω $R_{DS(ON)}$

Complementary

TC1550
N-CH: 500V BV_{DSS}, 60Ω $R_{DS(ON)}$
P-CH: -500V BV_{DSS}, 125Ω $R_{DS(ON)}$

TC2320
N-CH: 200V BV_{DSS}, 7Ω $R_{DS(ON)}$
P-CH: -200V BV_{DSS}, 12Ω $R_{DS(ON)}$

TC6215
N-CH: 150V BV_{DSS}, 4Ω $R_{DS(ON)}$
P-CH: -150V BV_{DSS}, 7Ω $R_{DS(ON)}$

TC6320
N-CH: 200V BV_{DSS}, 7Ω $R_{DS(ON)}$
P-CH: -200V BV_{DSS}, 8Ω $R_{DS(ON)}$

TC7920
N-CH: 200V BV_{DSS}, 13Ω $R_{DS(ON)}$
P-CH: -200V BV_{DSS}, 15Ω $R_{DS(ON)}$

TC8020
N-CH: 200V BV_{DSS}, 8Ω $R_{DS(ON)}$
P-CH: -200V BV_{DSS}, 9.5Ω $R_{DS(ON)}$

TC8220
N-CH: 200V BV_{DSS}, 5.3Ω $R_{DS(ON)}$
P-CH: -200V BV_{DSS}, 6.5Ω $R_{DS(ON)}$

<< BACK to Ultrasound

<< BACK

Ultrasound Transmit/Receive Switch ICs

Product Tree

- 1-Channel
  - MD0100
- 2-Channel
  - MD0100D
- 4-Channel
  - MD0101
  - MD0105

<< BACK to Ultrasound Transmit /Receive Switch Ics Demo & Eval Boards

<< BACK

Ultrasound MOSFET Drivers

Product Tree

- 2-Channel
  - MD1210
  - MD1211
  - MD1213
- 4-Channel
  - MD1810
  - MD1811
  - MD1812
  - MD1813
  - MD1820
  - MD1821
  - MD1822
- 12-Channel
  - 5-Level
    - MD1711
    - MD1712
    - MD1715
  - 3-Level
    - MD1716

<< BACK to Ultrasound MOSFET Driver Demo & Eval Boards

<< BACK

Ultrasound Transmit ICs

Product Tree

- Beamformers
  - MD2131
  - MD2134
  - MD1730
- Continuous Wave
  - CW01
- Transmit Pulsers
  - 1-Channel
    - HV7360
    - HV7361
  - 4-Channel
    - HV748
    - HV7321
  - 8-Channel
    - HV7350
    - HV7351
    - HV7355

<< BACK to Ultrasound Transmit IC Demo & Eval Boards

<< BACK

Ultrasound Products

Product Tree

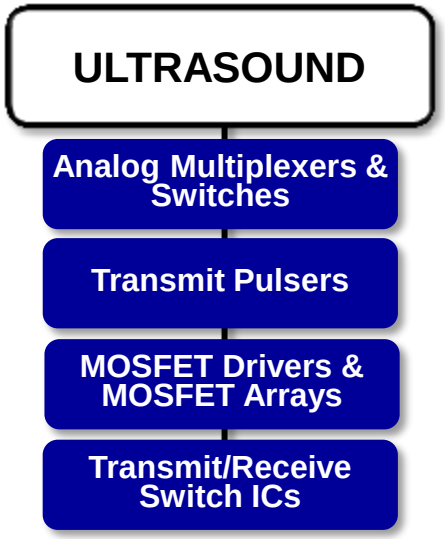

<< BACK

Ultrasound Analog Multiplexers & Switches

Product Tree

- 8-Channel
  - 8 x SPST
    - HV2201 / HV2301
    - HV2321 Unipolar
    - HV20220
    - HV20320
    - HV232
    - HV2221 Unipolar
    - HV219
- 12-Channel
  - 6 x 2:1 MUX
    - HV209
- 16-Channel
  - 8 x SPDT
    - HV2733
  - 16 x SPST
    - HV2601 / HV2701
    - HV2605 / HV2705
  - 2 Bank of 8 x SPST
    - HV20822
    - HV238
    - HV2631 / HV2731
- 24-Channel
  - 24 x SPST
    - HV2662 / HV2762
  - 8 x 3:1 MUX
    - HV2661 / HV2761
- 32-Channel
  - 2 Bank of 16 x SPST
    - HV2808
    - HV2809
  - 16 x 2:1 MUX
    - HV2801 / HV2901
  - 32 x SPST
    - HV2802/HV2902

<< BACK

Application Specific

Product Tree

- High Side Current Monitors
  - HV7800
  - HV7801
  - HV7802
  - Mixed Signal Current Sensors
- Lens Drivers
  - HV892
- Complementary MOSFET Level Translator and Driver
  - HT0440
  - HT0740
- Relay Driver & Controller
  - HV9901
- Fault Protection
  - FP0100

<< BACK to Application Specific Demo & Eval Boards

<< BACK

Driver Arrays

Product Tree

Source-Sink Outputs

- HV3418 (64/180/±5)
- HV507 (64/300/±1)
- HV513 (8/250/±20,*)
- HV518 (32/80/-25,+2,*)
- HV5308 (32/80/±20)
- HV5408 (32/80/±20)
- HV574 (80/80/-3,+15)
- HV57708 (64/80/-15,+12)
- HV57908 (64/80/-15, +12)
- HV508 (2/45/-2.8,+0.38,*)
- HV5812 (20/80/-25,+1)
- HV582 (96/80/±75)
- HV583 (128/80/±30)
- HV66 (32/60/±5)
- HV6810 (10/80/-25,+0.1)
- HV7022 (34/230/±70,*)
- HV7224 (40/240/±70)
- HV7620 (32/200/±50)
- HV9308 (32/80/-20,+5)
- HV9408 (32/80/-20,+5)
- HV9808 (32/80/-20,+5)

Source Only Outputs

- HV57009 (64/85/-2)
- MIC2981/2 (8/35/-2)
- MIC5891 (8/35/-500)

Sink Only Outputs

- MIC5800/1 (4,8/50/500)
- MIC5821 (8/35/500)
- MIC5822 (8/50/500)
- MIC5841 (8/35/500)
- MIC5842 (8/50/500)
- MIC58P01 (8/80/500,*)
- MIC58P42 (8/50/500,*)
- MIC59P50 (8/80/500,*)
- MIC59P60 (8/50/500,*)
- HV5122 (32/225/100)
- HV5222 (32/225/100)
- HV5522 (32/220/100)
- HV5523 (32/220/100)
- HV5530 (32/300/100)
- HV5622 (32/220/100)
- HV5623 (32/220/100)
- HV5630 (32/300/100)

NOTE: #/#/# below part number are Channel Count/Voltage Out (Operating)/Current per Channel (mA), and * if there is are notes in mouse-over text. Each have their own considerations w.r.t. digital controls.

<< BACK

Amplifiers / MEMS Drivers

Product Tree

- Amplifiers / MEMS Drivers
  - HV254
  - HV256
  - HV257
  - HV264

<< BACK to Amplifiers / MEMs Drivers Demo & Eval Boards

<< BACK

Electroluminescent (EL) Backlight Drivers

Product Tree

Single Lamp

- HV816 (42)
- HV823 (23)
- HV825 (3.0)
- HV830 (25)
- HV833 (12)
- HV857 (5.0)
- HV857L (5.0)
- HV859 (5.0)
- HV860 (5.0)
- MIC4826 (3.0)
- MIC4827 (3.0)
- MIC4830 (4.0)
- MIC4832 (3.0)
- MIC4833 (4.0)

Inductorless

- HV850 (1.5)
- HV852 (1.5)
- HV853 (1.5)

Dual Lamp

- HV861 (5.0)

16-Segment

- HV509 (6.5)
- HV528 (6.5)

Offline

- HV809 (100)

NOTE: # in brackets indicates est. maximum screen size to be driven

<< BACK

Linear Current Regulators

Product Tree

Dimming

External FET

- **CL2**
  Vo = 90V, Io = 20mA
- **CL25**
  Vo = 90V, Io = 25mA
- **CL220**
  Vo = 220V, Io = 20mA

PWM

- **CL320**
  Vo = 90V, Io = 20mA
- **CL325**
  Vo = 90V, Io = 25mA
- **CL330**
  Vo = 90V, Io = 30mA

Low Dropout

- **CL520**
  Vo = 90V, Io = 20mA
- **CL525**
  Vo = 90V, Io = 25mA

High Output Current

- **CL6**
  Vo = 90V, Io = 100mA
- **CL7**
  Vo = 90V, Io = 100mA
  PWM Dimming

<< BACK

P-Channel Enhancement Mode MOSFETs

Product Tree

P-Channel

Vertical

- VP0104 -40V BV_{DSS}, 8Ω $R_{DS(ON)}$
- VP0106 -60V BV_{DSS}, 8Ω $R_{DS(ON)}$
- VN0109 -90V BV_{DSS}, 8Ω $R_{DS(ON)}$
- VP0550 -500V BV_{DSS}, 125Ω $R_{DS(ON)}$
- VP0808 -80V BV_{DSS}, 5Ω $R_{DS(ON)}$
- VP2106 -60V BV_{DSS}, 12Ω $R_{DS(ON)}$
- VP2110 -100V BV_{DSS}, 12Ω $R_{DS(ON)}$
- VP2206 -60V BV_{DSS}, 0.9Ω $R_{DS(ON)}$
- VP2450 -500V BV_{DSS}, 30Ω $R_{DS(ON)}$
- VP3203 -30V BV_{DSS}, 0.6Ω $R_{DS(ON)}$

Lateral

- LP0701 -16.5V BV_{DSS}, 1.5Ω $R_{DS(ON)}$

Low Threshold

- TP0604 -40V BV_{DSS}, 2Ω $R_{DS(ON)}$
- TP0610 -60V BV_{DSS}, 10Ω $R_{DS(ON)}$
- TP0620 -200V BV_{DSS}, 12Ω $R_{DS(ON)}$
- TP2104 -40V BV_{DSS}, 6Ω $R_{DS(ON)}$
- TP2424 -240V BV_{DSS}, 8Ω $R_{DS(ON)}$
- TP2435 -350V BV_{DSS}, 15Ω $R_{DS(ON)}$
- TP2502 -20V BV_{DSS}, 2Ω $R_{DS(ON)}$
- TP2510 -100V BV_{DSS}, 3.5Ω $R_{DS(ON)}$
- TP2520 -200V BV_{DSS}, 12Ω $R_{DS(ON)}$
- TP2522 -220V BV_{DSS}, 12Ω $R_{DS(ON)}$
- TP2535 -350V BV_{DSS}, 25Ω $R_{DS(ON)}$
- TP2540 -400V BV_{DSS}, 25Ω $R_{DS(ON)}$
- TP2635 -350V BV_{DSS}, 15Ω $R_{DS(ON)}$
- TP2640 -400V BV_{DSS}, 15Ω $R_{DS(ON)}$
- TP5322 -220V BV_{DSS}, 12Ω $R_{DS(ON)}$
- TP5335 -350V BV_{DSS}, 30Ω $R_{DS(ON)}$

<< BACK

N-Channel Enhancement Mode MOSFETs

Product Tree

N-Channel

Vertical

- 2N6660 — 60V BV_{DSS}, 3Ω $R_{DS(ON)}$
- 2N6661 — 90V BV_{DSS}, 4Ω $R_{DS(ON)}$
- 2N7000 — 60V BV_{DSS}, 5Ω $R_{DS(ON)}$
- 2N7002 — 60V BV_{DSS}, 7.5Ω $R_{DS(ON)}$
- 2N7008 — 60V BV_{DSS}, 7.5Ω $R_{DS(ON)}$
- VN0104 — 40V BV_{DSS}, 3Ω $R_{DS(ON)}$
- VN0106 — 60V BV_{DSS}, 3Ω $R_{DS(ON)}$
- VN0109 — 90V BV_{DSS}, 3Ω $R_{DS(ON)}$
- VN0300 — 30V BV_{DSS}, 1.2Ω $R_{DS(ON)}$
- VN0550 — 500V BV_{DSS}, 60Ω $R_{DS(ON)}$
- VN0606 — 60V BV_{DSS}, 3Ω $R_{DS(ON)}$
- VN0808 — 80V BV_{DSS}, 4Ω $R_{DS(ON)}$
- VN10K — 60V BV_{DSS}, 5Ω $R_{DS(ON)}$
- VN1206 — 120V BV_{DSS}, 6Ω $R_{DS(ON)}$
- VN2106 — 60V BV_{DSS}, 4Ω $R_{DS(ON)}$
- VN2110 — 100V BV_{DSS}, 4Ω $R_{DS(ON)}$
- VN2210 — 100V BV_{DSS}, 0.35Ω $R_{DS(ON)}$
- VN2222 — 60V BV_{DSS}, 7.5Ω $R_{DS(ON)}$
- VN2224 — 240V BV_{DSS}, 1.25Ω $R_{DS(ON)}$
- VN2406 — 240V BV_{DSS}, 6Ω $R_{DS(ON)}$
- VN2410 — 240V BV_{DSS}, 10Ω $R_{DS(ON)}$
- VN2450 — 500V BV_{DSS}, 13Ω $R_{DS(ON)}$
- VN2460 — 600V BV_{DSS}, 20Ω $R_{DS(ON)}$
- VN3205 — 50V BV_{DSS}, 0.3Ω $R_{DS(ON)}$
- VN4012 — 400V BV_{DSS}, 12Ω $R_{DS(ON)}$

Low Threshold

- TN0104 — 40V BV_{DSS}, 1.8Ω $R_{DS(ON)}$
- TN0106 — 60V BV_{DSS}, 3Ω $R_{DS(ON)}$
- TN0110 — 100V BV_{DSS}, 3Ω $R_{DS(ON)}$
- TN0604 — 40V BV_{DSS}, 0.75Ω $R_{DS(ON)}$
- TN0606 — 60V BV_{DSS}, 1.5Ω $R_{DS(ON)}$
- TN0610 — 100V BV_{DSS}, 1.5Ω $R_{DS(ON)}$
- TN0620 — 200V BV_{DSS}, 6Ω $R_{DS(ON)}$
- TN0702 — 20V BV_{DSS}, 1.3Ω $R_{DS(ON)}$
- TN2106 — 60V BV_{DSS}, 2.5Ω $R_{DS(ON)}$
- TN2124 — 240V BV_{DSS}, 15Ω $R_{DS(ON)}$
- TN2130 — 300V BV_{DSS}, 25Ω $R_{DS(ON)}$
- TN2425 — 250V BV_{DSS}, 3.5Ω $R_{DS(ON)}$
- TN2435 — 350V BV_{DSS}, 6Ω $R_{DS(ON)}$
- TN2501 — 18V BV_{DSS}, 2.5Ω $R_{DS(ON)}$
- TN2504 — 40V BV_{DSS}, 1Ω $R_{DS(ON)}$
- TN2510 — 100V BV_{DSS}, 1.5Ω $R_{DS(ON)}$
- TN2524 — 240V BV_{DSS}, 6Ω $R_{DS(ON)}$
- TN2540 — 400V BV_{DSS}, 12Ω $R_{DS(ON)}$
- TN2640 — 400V BV_{DSS}, 5Ω $R_{DS(ON)}$
- TN5325 — 250V BV_{DSS}, 7Ω $R_{DS(ON)}$
- TN5335 — 350V BV_{DSS}, 15Ω $R_{DS(ON)}$

<< BACK

Depletion Mode MOSFETs

Product Tree

N-Channel

Vertical

- DN1509 — 90V BV_{DSX}, 6Ω $R_{DS(ON)}$
- DN2450 — 500V BV_{DSX}, 10Ω $R_{DS(ON)}$
- DN2470 — 700V BV_{DSX}, 42Ω $R_{DS(ON)}$
- DN2530 — 300V BV_{DSX}, 12Ω $R_{DS(ON)}$
- DN2535 — 350V BV_{DSX}, 25Ω $R_{DS(ON)}$
- DN2540 — 400V BV_{DSX}, 25Ω $R_{DS(ON)}$
- DN2625 — 250V BV_{DSX}, 3.5Ω $R_{DS(ON)}$
- DN3135 — 350V BV_{DSX}, 35Ω $R_{DS(ON)}$
- DN3145 — 450V BV_{DSX}, 60Ω $R_{DS(ON)}$
- DN3525 — 250V BV_{DSX}, 10Ω $R_{DS(ON)}$
- DN3535 — 350V BV_{DSX}, 10Ω $R_{DS(ON)}$
- DN3545 — 450V BV_{DSX}, 20Ω $R_{DS(ON)}$
- DN3765 — 650V BV_{DSX}, 8.0Ω $R_{DS(ON)}$

Lateral

- LND01 — 9V BV_{DSX}, 1.4Ω $R_{DS(ON)}$
- LND150 — 500V BV_{DSX}, 1000Ω $R_{DS(ON)}$

<< BACK

Inductorless Off-Line Regulators

Product Tree

AC = Offline Capable

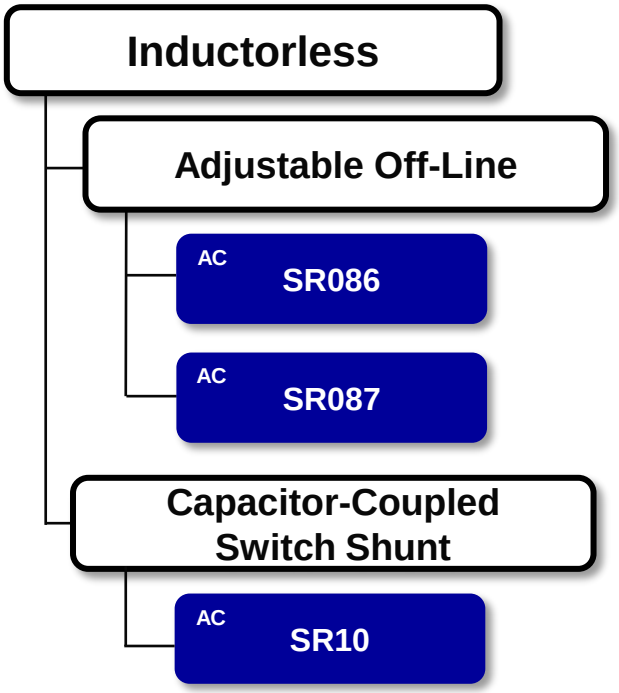

<< BACK to Inductorless Regulator Demo & Eval Boards

<< BACK

High Voltage Linear Regulators

Product Tree

AC = Offline Capable

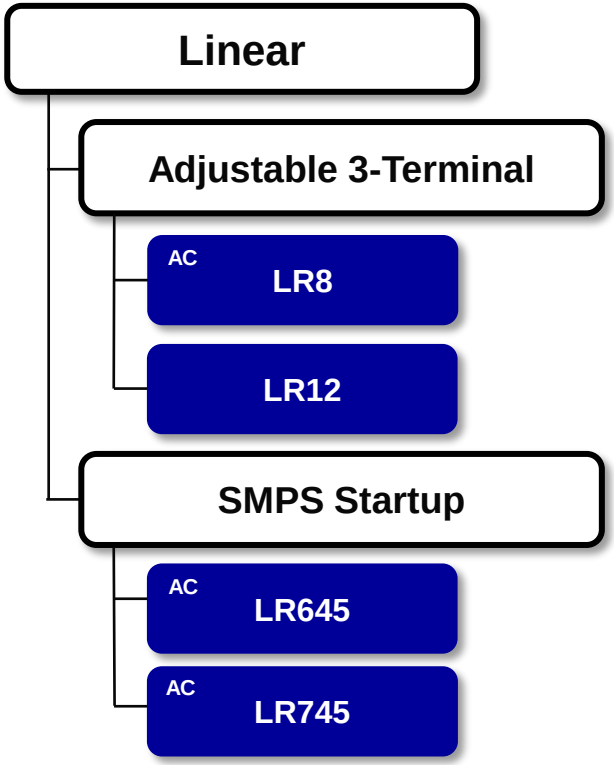

<< BACK

Temperature Sensors

Product Tree

Logic Output

- **TC620** – Dual Trip Point, Internal TS
- **TC621** – Dual Trip Point, Thermistor
- **TC623** – Dual Trip Point, Resistor Set
- **MCP9501/2/3/4** – Temp Switch, Factory Set
- **MCP9509/10** – Temp Switch, Resistor Set\
- **TC622** – Temp Switch Resistor Set , 18V

Voltage Output

- **MCP9700/A** – 10.0 mV/°C
- **MCP9701/A** – 19.5 mV/°C

Specialty

- **MCP9600 Thermocouple** – EMF V to ° C

Digital Output

SMBus/I²C™

Remote Monitors with Alerts

- **MCP9902/3/4** – 2-4 Channel, For Cold Apps
- **EMC1412** – 2 Channel, Alert/Therm
- **MIC184** – 2 Channel, LM75 Compatible
- **MIC280** – 2 Channel, SOT23
- **EMC1413** – 3 Channel, Alert/Therm
- **EMC1414** – 4 Channel, Alert/Therm
- **EMC1422/3/4** – 2-4 Channel, Alert/Shdn
- **EMC1182/3/4** – 2-4 Channel, 1.8V Comm
- **EMC1186/7/8** – 2-4 Channel, 1.8V Comm
- **EMC1428/38** – 8 Channel, Alert/Shdn

Local Monitors with Alerts

- **TC74** – 2°C, SOT, TO-220
- **TCN75A** – Lowest Cost
- **AT30TS74** – 2°C Max , -10°C to 100°C, WLCSP
- **AT30TS75A** – 1°C Max, 0°C to 85°C, 1.7V to 5.5V
- **AT30TS750A** – 1°C Max , 0°C to 85°C, NV Reg
- **MCP9800/1/2/3** – 1°C Max , -10°C to 85°C
- **MCP9804** – 1°C Max, -40°C to 125°C
- **MCP9808** – 0.5°C Max -40°C to 125°C
- **MCP9844** – TSE2004
- **EMC1001** – 2 Alerts

SPI

- **TC72** – 10 bit, 2°C
- **TC77** – 13 bit, 1°C

With EEPROM

- **MCP98243** – 2k EEPROM with SPD
- **AT30TSE002B** – 2k EEPROM with SPD
- **MCP98244** – 4k EEPROM with SPD
- **AT30TSE004A** – 4k EEPROM with SPD
- **AT30TSE752/4/8A** – 2/4/8k EEPROM, NV Registers

Multi-Temp Polling

- **EMC1043/53/63** – 3 channel
- **EMC1046** – 6 Channel
- **EMC1047** – 7 Channel

<< BACK to Thermal Demo & Eval Boards

<< BACK

Fan Control and Hardware Management

Product Tree

Closed Loop Fan Controllers With SMBus/I2C

PWM Drive, Multi-Temp & Hardware Mgt

- EMC2103 Single Fan, 2/4 Temp
- EMC2113 Single Fan, 4 Temp
- EMC2104 Dual Fan, 5 Temp

Linear Drive, Multi-Temp & Hardware Mgt

- EMC2112 Single Fan, 4 Temp
- EMC2105 Single Fan, 5 Temp
- EMC2106 Dual Fan, 5 Temp

PWM Fan Speed Controllers

- EMC2301 Single Fan
- EMC2302 Dual Fan
- EMC2303 Triple Fan
- EMC2305 Five Fan

Open Loop Fan Controllers

SMBus/I2C and Alert

- EMC2101 Single PWM, 2 Temp
- EMC6D103S Triple PWM, 3 Temp
- EMC2300 Triple PWM, 3 Temp
- TC654/55 1 PWM, Dual Thermistor
- TC664/65 1 PWM, Thermistor Input

With Alert

- TC642/6/7/8/9 Single ,Thermistor Input
- TC642/6/7/8/9B Single, Thermistor & Restart
- TC650/1/2/3 Single, Integrated Temp

Fan Fault Detection/Prediction

- TC670 Wear Out Detection

GPIO Expander Fan Controller

- MIC74

<< BACK to Fan Control Demo & Eval Boards

<< BACK

Amplifiers

Product Tree

Operational Amplifiers

- General Purpose Op Amps (V_{os} > 1 mV)
- Precision Op Amps (V_{os} < 1 mV)

Instrumentation Amplifiers

- MCP6N11
  Low Power
  Gain Options: 1, 2, 5, 10 or 100 V/V
- MCP6N16
  High Precision
  Gain Options: 1, 10, or 100 V/V

PGA/SGA

- MCP6S21/2/6/8
  1/2/6/8-ch, low offset
- MCP6S91/2/3
  1/2/3-ch, low cost
- MCP6G01/2/3/4
  1/2/4-ch, fixed gain

<< BACK to Linear Demo & Eval Boards

<< BACK

General Purpose Op Amps

Product Tree

GBWP < 1 MHz

V_{DD} max < 7V

- MCP6441/2/4 GBWP: 9 kHz, I_Q: 450 nA
- MCP6041/2/3/4 GBWP: 14 kHz
- MCP6421/2/4 GBWP: 90 kHz, Vos: 1mV EMI Rejection
- MCP6141/2/3/4 GBWP: 100 kHz
- MCP6231/2/4 GBWP: 300 kHz
- MIC861 GBWP: 400 kHz
- MIC863 GBWP: 450 kHz
- MCP6241/2/4 GBWP: 550 kHz,

7V< V_{DD} max <18V

- MIC7111 GBWP: 25 kHz
- MIC7300 GBWP: 500kHz
- LMC7101 GBWP: 500kHz
- MIC7122 GBWP: 750kHz

GBWP = 1 to 10 MHz

V_{DD} max < 7V

- MCP6001/2/4 GBWP: 1 MHz
- MCP6401/2/4 GBWP: 1 MHz, I_Q : 45 uA
- MCP6471/2/4 GBWP: 2 MHz, Vos: 1.5 mv
- MCP6271/2/3/4/5 GBWP: 2 MHz
- MCP601/2/3/4 GBWP: 2.8 MHz, R/R Out
- MIC862 GBWP: 3 MHz
- MCP6286 GBWP: 3.5 MHz, Low Noise
- MCP6481/2/4 GBWP: 4 MHz, Vos: 1.5 mV
- MIC860 GBWP: 4 MHz
- MCP6281/2/3/4 GBWP: 5 MHz
- MCP6491/2/4 GBWP: 7.5 MHz, Vos: 1.5 mV
- MCP6291/2/3/4/5 GBWP: 5 MHz/ 10 MHz

7V< V_{DD} max <32V

- MCP6Hxx GBWP: 1/2/5/10 MHz
- MIC6211 GBWP: 2.5 MHz

GBWP > 10MHz

V_{DD} max < 7V

- MCP631/2/3/4/5/9 GBWP: 24 MHz
- MCP660/1/2/3/4/5/9 GBWP: 60 MHz

V_{DD} max = 18V

- MIC920 High Speed GBWP: 80 MHz

Low Cost Op Amps

- MCP6LXX GBWP: 1/2/10 MHz

Precision Op Amps (V_{os} < 1mV)

<< BACK

Precision Amplifiers

Product Tree

GBWP < 1 MHz

- NVM Trimmed
  - MCP6031/2/3/4
    GBWP: 10 kHz, Vos: 150 uV
  - MCP606/7/8/9
    GBWP: 155 kHz, Vos: 250 uV
  - MCP6051/2/4
    GBWP: 385 kHz, Vos: 150 uV
  - MCP6061/2/4
    GBWP: 730 kHz, Vos: 150 uV
  - Bipolar/ NVM
    - MCP616/7/8/9
      GBWP: 190 kHz, Vos: 150 uV
- Zero-Drift
  - MCP6V11/2/4
    GBWP: 80 kHz, Vos: 8 uV
  - MCP6V31/2/4
    GBWP: 300 kHz, Vos: 8 uV
  - TC7652
    GBWP: 400 kHz, Vos: 5 uV

GBWP = 1 to 10 MHz

- NVM Trimmed
  - MCP6071/2/4
    GBWP: 1.2 MHz, Vos: 250 uV
- Zero-Drift
  - MCP6V61/2/4
    GBWP: 1 MHz, Vos: 8 uV
  - MCP6V01/2/3
    GBWP: 1.3 MHz, Vos: 2 uV
  - MCP6V06/7/8
    GBWP: 1.3 MHz, Vos: 3 uV
  - MCP6V26/7/8
    GBWP: 2 MHz, Vos: 2 uV
  - MCP6V71/2/4
    GBWP: 2 MHz, Vos: 8 uV
  - MCP6V81/2/4
    GBWP: 5 MHz, Vos: 9 uV
  - TC7650
    GBWP: 2 MHz, Vos: 5 uV

GBWP > 10MHz

- NVM Trimmed
  - MCP6021/2/3/4
    GBWP: 10 MHz, Vos: 250 uV
- Zero-Drift
  - MCP6V91/2/4
    GBWP: 10 MHz, Vos: 9 uV
- Calibrated
  - MCP621/1S/2/3/4/5/9
    GBWP: 20 MHz, Vos: 200 uV
  - MCP651/1S/2/3/4/5/9
    GBWP: 50 MHz, Vos: 200 uV

General Purpose Op Amps
(V_{os} > 1mV)

<< BACK

Comparators

Product Tree

Push-Pull Output

- 4µs Prop Delay
  - MCP6541/2/3/4
  - MCP65R41 w/ Reference
- 50ns Prop Delay
  - MCP6561/2/4

Open Drain Output

- 4µs Prop Delay
  - MCP6546/7/8/9
  - MCP65R46 w/ Reference
- 50ns Prop Delay
  - MCP6566/7/9

High Voltage

- 36V
  - MIC6270 300uA, SOT-23
- 10V
  - MIC7211 (Push-pull output) MIC7221 (Open-drain output)

Window Comparator

- 5.5V
  - MIC833 Comparator and Reference with Adj. Hysteresis
  - MIC841/2 Comparator with 1.25% Reference & Adjustable Hysteresis

<< BACK to General Comparator Eval Boards

<< BACK

DC-DC Converters

Product Tree

DC-DC Converters

- **Buck Switching Regulators**
  - 5.5V to 6.0V Input
  - 17V to 75V Input
  - Multiple Output
- Boost Switching Regulators
- Multiple Output Regulators (PMICs)
- Charge Pumps
- Power Modules (Internal Inductor Switching Regulators)
- Inductorless Off-Line Regulators
- **Linear Regulators**
  - Single Output – negative to 5.5V Input
  - Single Output – 6V to 8V Input
  - Single Output – 12V to 16V Input
  - Single Output – 24V to 120V Input
  - Dual Output
  - Three or More Outputs
  - Linear Regulator Controllers
  - Linear Power Filters and Ripple Blockers™
  - High Input Voltage Linear Regulators

<< BACK to DC-DC Demo & Eval Boards

<< BACK

Charge Pumps

Product Tree

- Inverters/Doublers
  - 25mAOutput
    - TC1240/A (4V & 5.5V in)
  - 40mAOutput
    - TC7662A (18V in)
  - 80mAOutput
    - TC962 (18V in)
  - 20mAOutput
    - TC1044S/7660S (12V in)
    - TC7660/H (10V in)
    - TC7662B (15V in)
- Multi Function
  - Vin to -2Vin
    - TC682
- Regulated Charge Pumps
  - Positive Converters
    - MCP1252/3 120mA
    - MCP1256/7/8/9 100mA

<< BACK to Charge Pump Demo & Eval Boards

<< BACK

PWM Controllers

Product Tree

PWM Controllers

- Digitally-Enhanced Power Analog Buck, Boost and Flyback Controllers with Integrated PIC® MCU Cores
- Analog Synchronous and Asynchronous Buck PWM Controllers
- Analog Boost, SEPIC, Flyback, Forward and Push-Pull PWM Controllers

<< BACK to PWM Controller Demo & Eval Boards

<< BACK

Digitally-Enhanced Power Analog Controllers

Product Tree

Mixed High/Low Drive Capability

MCP19110/1
32V Synchronous Controller for Step-Down Topologies
4kw Program Memory

MCP19118/19 ★
40V Synchronous Controller for Step-Down Topologies
4kw Program Memory

MCP19122/3 ★
40V Synchronous Controller for Step-Down Topologies
4kw Program Memory

Low-Side Drive Capability

MCP19114/5
42V Synchronous Controller for Step-Up Topologies
4kw Program Memory

MCP19116/7 ★
42V Synchronous Controller for Step-Up Topologies
8kw Program Memory &
Improved Regulation Accuracy

MCP19124/5 ★
42V Synchronous Controller for Step-Up Topologies
4kw Program Memory
Voltage & Current Regulation

MCP19214/5 ★
42V Synchronous Controller for Step-Up Topologies
8kw Program Memory
Voltage & Current Regulation

★ = Preferred option within similar products

<< BACK to Switching Controller Demo & Eval Boards

<< BACK

System Supervisors & Voltage Detectors

Product Tree

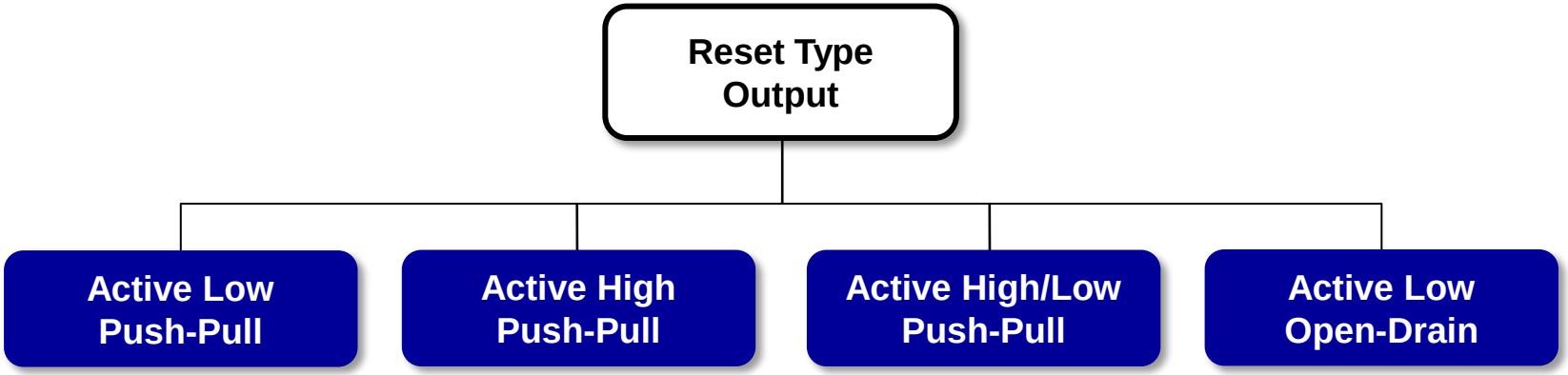

<< BACK to General Purpose Demo & Eval Boards

<< BACK

Active Low Push-Pull

Product Tree

Low Pin Count

- MCP809
  3 pin, 45uA, 350ms
  2.7V to 5V
- MIC809
  3 pin, 5uA, 140ms
  2.7V to 5V
- TCM809 ★
  3 pin, 12uA, 140ms
  2.3V to 5V
- MCP112
  3 pin, 1uA, 0.1ms
  1.95V to 5V
- TC54
  3 pin, 1uA, 0.1ms,
  10V-Vin, 1.4V to 6V
- MCP102/3 ★
  3 pin, 1uA, 120ms
  1.95V to 5V
- MCP100
  3 pin, 45uA, 350ms
  2.7V to 5V
- MIC1815
  3 pin, 5uA, 100ms
  3.3V
- TC1272A
  3 pin, 12uA, 140ms
  2.3V to 5V
- MIC1810
  3 pin, 5uA, 100ms
  5V

Multiple Input

- MIC2774L
  5 pin, MR, Dual Vin
  140ms, 1.8V to 5V
- MIC2776L
  5 pin, MR, VDD & Vin
  140ms, 0.3Vref
- MIC2779L
  5 pin, MR, Vref 1.24V
  Set 2 external threshold
- MIC2785
  5 pin, MR, VDD & Vin
  1.62V

MR = Manual Reset
WDT = Watchdog Timer
PF = Power Fail

★ = Preferred option(s) within similar products

Manual Reset and/or Watchdog

- MCP1316-22
  5 pin, MR, WDT, Many timing/voltage options
- MIC705/6
  8 pin, MR, WDT, PF
  200ms, 4.4V, 4.65V
- TC1270A
  4/5 pin, MR
  280ms, 2.7V to 5V
- MIC8115
  4 pin, MR
  1100ms, 3.3V
- MIC811 ★
  4 pin, MR
  140ms, 2.7V to 5V
- MIC8114
  4 pin, MR, 790ms, 3.3V,
  AMD Elan SC400/410

<< BACK

Active High Push-Pull

Product Tree

Low Pin Count

- MCP101
  3 pin, 45uA, 350ms
  2.7V to 5V
- MIC810
  3 pin, 5uA, 140ms
  2.7V to 5V
- MCP810
  3 pin, 45uA, 350ms
  2.7V to 5V
- TCM810 ★
  3 pin, 12uA, 130ms
  2.3V to 5V

Multiple Input

- MIC2774H
  5 pin, Dual Vin, MR
  140ms, 1.8V to 5V
- MIC2776H
  5 pin, MR, VDD & Vin
  140ms, 0.3Vref
- MIC2779H
  5 pin, MR, Vref 1.24V
  Set 2 external threshold

Manual Reset and/or Watchdog

- MCP1316-22
  5 pin, MR, WDT, Many timing/voltage options
- MIC812 ★
  4 pin, MR
  140ms, 2.7V to 5V
- TC1271A
  4/5 pin, MR
  280ms, 2.7V to 5V

MR = Manual Reset
WDT = Watchdog Timer
PF = Power Fail

★ = Preferred option within similar products

<< BACK

Active High/Low Push-Pull

Product Tree

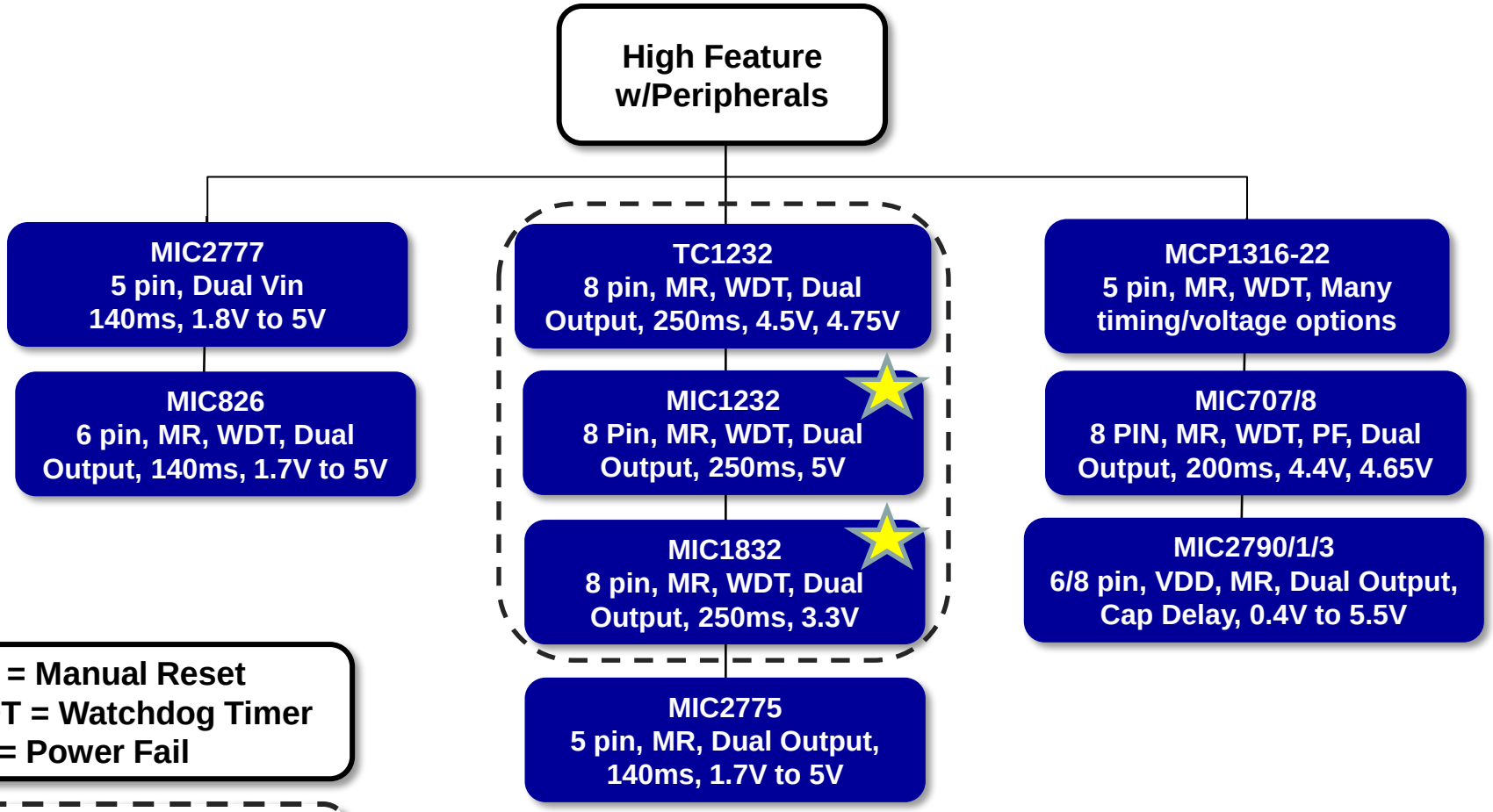

MR = Manual Reset
WDT = Watchdog Timer
PF = Power Fail

= Preferred option within similar products

<< BACK

Active Low Open-Drain

Product Tree

Low Pin Count

- MCP120/130
  3 pin, 45uA, 350ms
  2.7V to 5V
- MCP111 ★
  3 pin, 1uA, 0.1ms
  1.95V to 5V
- MCP121/131
  3 pin, 1uA, 120ms
  1.95V to 5V
- MIC803
  3 pin, 5uA, 140ms,
  1100ms, 2.7V to 5V
- TC54
  3 pin, 1uA, 0.1ms, 10V-Vin, 1.4V to 6V

Multiple Input

- MIC2774N
  5 pin, Dual Vin, MR
  140ms, 1.8V to 5V
- MIC2776N
  5 pin, MR, VDD & Vin
  140ms, 0.3Vref

High Feature w/Peripherals

- MCP1316-22
  5 pin, MR, WDT, Many timing/voltage options
- MIC2772
  8 pin, Dual MR and Vin
  3V, 3.15V, 4.5V, 4.75V
- MIC2782 ★
  6 bump CSP, Dual MR
  Push Button Resets
- TC1270AN
  4/5 pin, MR
  280ms, 2.7V to 5V
- MIC2755
  8 pin, Handheld focus
  Vin thresholds
- MIC2778
  5 pin, Vref 1.24V
  Set 2 external threshold
- MIC6315
  4 pin, MR, 20ms, 140ms,
  1100ms, 3V, 3.3V, 5V
- ATA5021
  8 pin, WDT, Wake,
  Enable Output, Adj.
  WDT time, 5V

★ = Preferred option within similar products

MR = Manual Reset
WDT = Watchdog Timer
PF = Power Fail

<< BACK

Power MOSFET Drivers

Product Tree

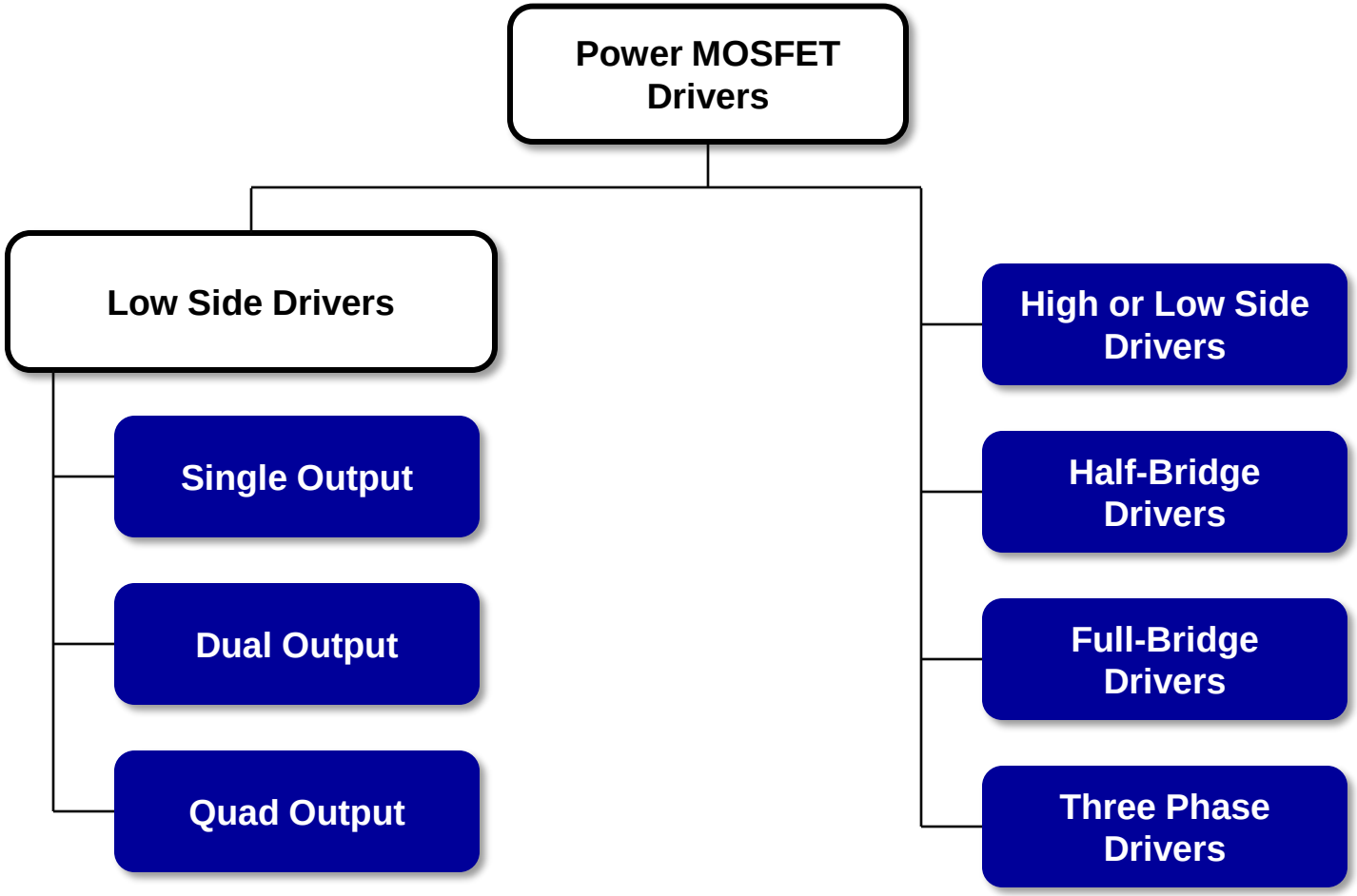

<< BACK to Power MOSFET Drivers Demo & Eval Boards

<< BACK

Power MOSFETs

Product Tree

25Vds, Voltage Rating

- MCP87018
  1.8 mΩ, 5x6 mm PDFN
- MCP87022
  2.2 mΩ, 5x6 mm PDFN
- MCP87030
  3.0 mΩ, 5x6 mm PDFN
- MCP87050
  5.0 mΩ, 5x6 mm PDFN
- MCP87055
  5.5 mΩ, 3.3x3.3mmPDFN
- MCP87090
  9 mΩ, 3.3x3.3/5x6 mm PDFN
- MCP87130
  13 mΩ, 3.3x3.3/5x6 mm PDFN

<< BACK to Switching Controller Demo & Eval Boards

<< BACK

Battery Chargers

Product Tree

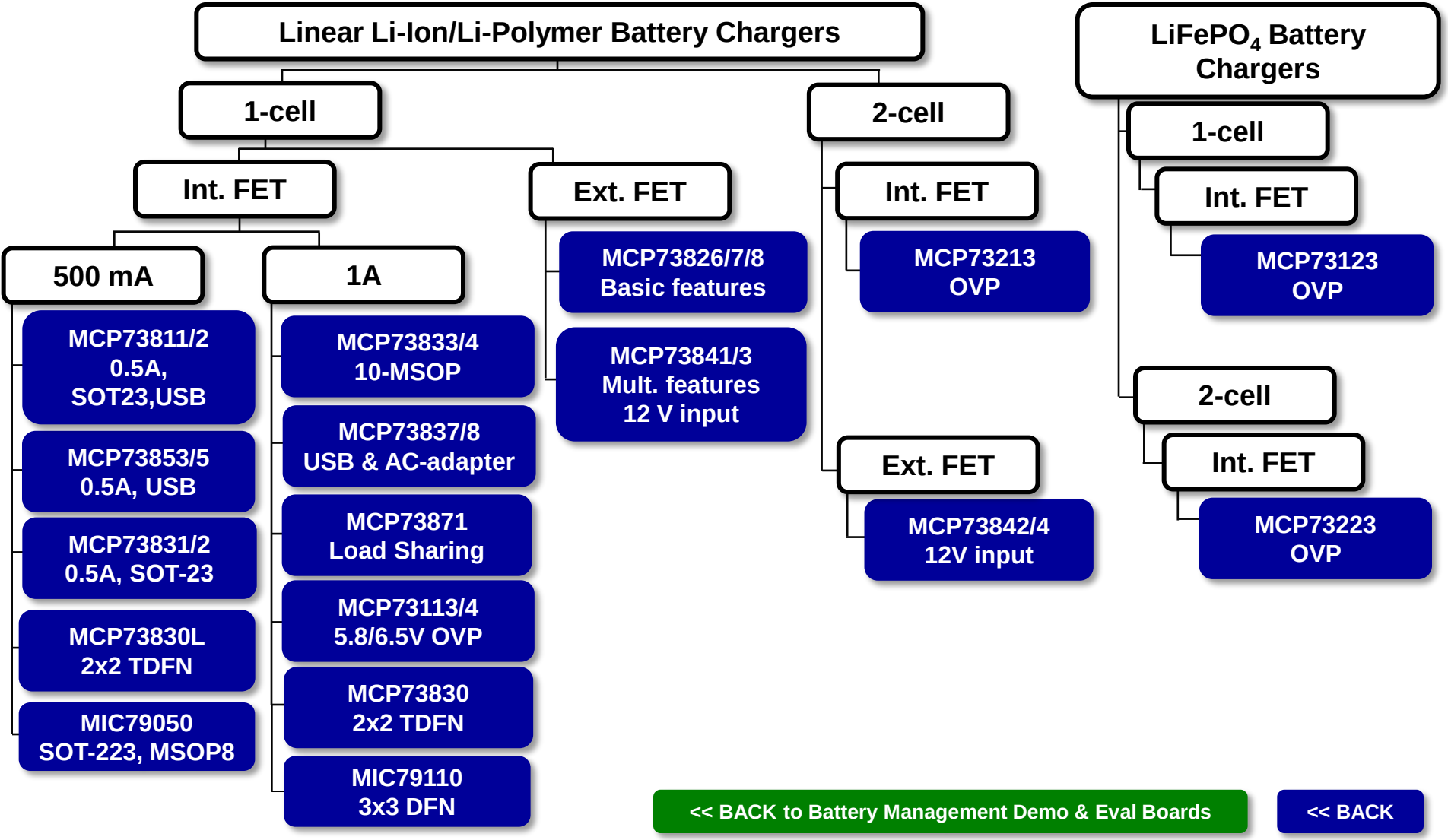

<< BACK to Battery Management Demo & Eval Boards

<< BACK

SAR A/D Converters

Product Tree

- SAR ADCs
  - 13-bit
    - MCP3301/2/4
      100 ksps, diff input
  - 12-bit
    - MCP3221
      22 ksps, I^2C, SOT-23
    - MCP3201/2/4/8
      100 ksps, SPI
  - 10-bit
    - MCP3021
      22 ksps, I^2C, SOT-23
    - MCP3001/2/4/8
      200 ksps, SPI

<< BACK to ADC Demo & Eval Boards

<< BACK

Delta-Sigma A/D Converters

Product Tree

Delta-Sigma ADCs

- **MCP3550**
  22-bit, 13 sps,
  50 or 60 Hz rejection
- **MCP3551**
  22-bit, 15 sps,
  50 & 60 Hz rejection
- **MCP3553**
  20-bit, 60 sps
- **MCP3421**
  18-bit, SOT23, I^2C
- **MCP3422/3/4**
  18-bit, 2/4-ch I^2C
- **MCP3425**
  16-bit, SOT23, I^2C
- **MCP3426/7/8**
  16-bit, 2/4-ch I^2C

<< BACK to ADC Demo & Eval Boards

<< BACK

Power Monitoring & Metering ICs

Product Tree

Power & Energy Meter ICs

Single Phase

- MCP39F511N
  UART, Dual-Load
- MCP39F511
  UART
- MCP39F521
  I2C
- MCP39F501
  UART (Power Only)
- ATM90E26
  UART/SPI/Pulse
- MCP3905A/06
  Active Power Pulse

Poly-Phase

- ATM90E32AS
  Meter IC
- ATM90E36A
  Meter IC w/ Harmonics

Analog-Front-Ends

- MCP3918
  1-Ch AFE
- ATSENSE101/201/301
  3/4/7-Ch AFE
- MCP3910
  2-Ch AFE
- MCP3911
  2-Ch AFE
- MCP3919
  3-Ch AFE
- MCP3912
  4-Ch AFE
- MCP3913
  6-Ch AFE
- MCP3914
  8-Ch AFE
- MCP3901/3
  1-Ch/6-Ch 5V AFE

<< BACK to Power Monitor/Meter Demo & Eval Boards

<< BACK

Current/DC Power Measurement ICs

Product Tree

Current/DC Power w/ Temp Measurement

- **EMC1701**
  1 temp, 3-24V, I²C
- **EMC1702**
  2 temp, 3-24V, I²C
- **EMC1704**
  4 temp, 3-24V, I²C

Current/DC Power Measurement

- **PAC1710**
  Single, 0-40V, I²C
- **PAC1720**
  Dual, 0-40V, I²C
- **PAC1921**
  Single, 0-32V w/Analog & Digital
- **High Voltage Analog Current Sensors**

<< BACK to Current/DC Power Demo & Eval Boards

<< BACK

Power Switches

Product Tree

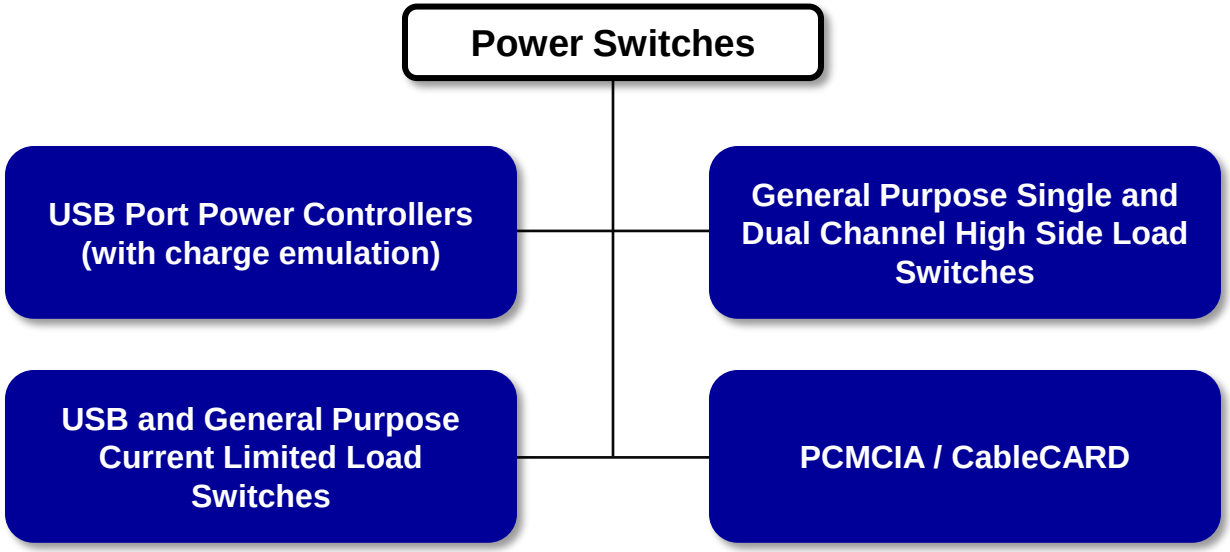

<< BACK to Power Switch Demo & Eval Boards

<< BACK

USB Port Power Controllers

Product Tree

Host Free Controller

UCS1001
- 9-Built in charger emulation profiles
- 2.5A Integrated Vbus power switch
- USB 2.0 Data switch

Programmable Controllers

Standard Versions

UCS1002
- 9-Built in charge emulation profiles
- 1 Programmable profile
- 2.5A Vbus power switch
- USB 2.0 data switch
- Highest current algorithm with SLA

UCS1003
- 9-Built in charge emulation profiles
- 1 Programmable profile
- 2.7A Vbus power switch
- USB 2.0 Data switch
- Highest current algorithm available with SLA

Automotive Versions

UCS81002
- 9-Built in charge emulation profiles
- 1 Programmable profile
- 2.5A Vbus power switch
- USB 2.0 data switch
- Highest current algorithm with SLA

UCS81003
- 9-Built in charge emulation profiles
- 1 Programmable profile
- 2.7A Vbus power switch
- USB 2.0 Data switch
- Highest current algorithm available with SLA

<< BACK to USB Power Control Demo & Eval Boards

<< BACK

Digital Potentiometers

Product Tree

6-bit

- Non- Volatile
  - U/D
    - MCP4021 Pot, 8MSOP
    - MCP4022 Rheo, 6SOT23
    - MCP4023 Pot, 6SOT23
    - MCP4024 Rheo, 5SOT23
- Volatile
  - U/D
    - MCP4011 Pot, 8MSOP
    - MCP4012 Rheo, 6SOT23
    - MCP4013 Pot, 6SOT23
    - MCP4014 Rheo, 5SOT23

7-bit

- Non- Volatile
  - SPI
    - MCP4141/2 Single
    - MCP4241/2 Dual
    - MCP4341/2 Quad
  - I²C
    - MCP4541/2 Single
    - MCP4641/2 Dual
    - MCP4441/2 Quad
- Volatile
  - SPI
    - MCP4131/2 Single
    - MCP4231/2 Dual
    - MCP4331/2 Quad
    - MCP41HV31 36V Single
  - I²C
    - MCP4531/2 Single
    - MCP4631/2 Dual
    - MCP4431/2 Quad
    - MCP40(D)17/8/9 SC-70
    - MCP45HV31 36V Single

8-bit

- Non- Volatile
  - SPI
    - MCP4161/2 Single
    - MCP4261/2 Dual
    - MCP4361/2 Quad
  - I²C
    - MCP4561/2 Single
    - MCP4661/2 Dual
    - MCP4461/2 Quad
- Volatile
  - SPI
    - MCP4151/2 Single
    - MCP4251/2 Dual
    - MCP4351/2 Quad
    - MCP41H51 36V Single
  - I²C
    - MCP4551/2 Single
    - MCP4651/2 Dual
    - MCP4451/2 Quad
    - MCP45HV51 36V Single

<< BACK to Mixed Signal Demo & Eval Boards

<< BACK

D/A Converters

Product Tree

- **8-bit**
  - **1-ch**
    - **SPI**
      - MCP4901
      - MCP4801 w/ Vref.
      - MCP48FEB01 w/ EEPROM
      - MCP48FVB01
    - **I²C**
      - MCP4706 w/ EEPROM
      - MCP47FEB01 w/ EEPROM
      - MCP47FVB01
  - **2-ch**
    - **SPI**
      - MCP4902
      - MCP4802 w/ Vref.
      - MCP48FEB02 w/ EEPROM
      - MCP48FVB02
    - **I²C**
      - MCP47FEB02 w/ EEPROM
      - MCP47FVB02
- **6-bit**
  - **I²C**
    - MCP47A1 Command Code
    - MCP47DA1 Windowed
- **10-bit**
  - **1-ch**
    - **SPI**
      - MCP4911
      - MCP4811 w/ Vref.
      - MCP48FEB11 w/ EEPROM
      - MCP48FVB11
    - **I²C**
      - MCP4716 w/ EEPROM
      - MCP47FEB11 w/ EEPROM
      - MCP47FVB11
  - **2-ch**
    - **SPI**
      - MCP4912
      - MCP4812 w/ Vref.
      - MCP48FEB12 w/ EEPROM
      - MCP48FVB12
    - **I²C**
      - MCP47FEB12 w/ EEPROM
      - MCP47FVB12
- **12-bit**
  - **1-ch**
    - **SPI**
      - MCP4921
      - MCP4821 w/ Vref.
      - MCP48FEB21 w/ EEPROM
      - MCP48FVB21
    - **I²C**
      - MCP4725 w/ EEPROM
      - MCP4726 w/ EEPROM
      - MCP47FEB21 w/ EEPROM
      - MCP47FVB21
  - **>2-ch**
    - **SPI**
      - MCP4922
      - MCP4822 w/ Vref.
      - MCP48FEB22 w/ EEPROM
      - MCP48FVB22
    - **I²C**
      - MCP4728 w/ EEPROM, Vref., 4-ch
      - MCP47FEB22 w/ EEPROM
      - MCP47FVB22

<< BACK to Mixed Signal Demo & Eval Boards

<< BACK

CAN and LIN Products

Product Tree

- CAN 2.0B Controller
  - MCP2515
  - MCP25625 with Integrated Transceiver
- CAN Transceiver
  - CAN Transceivers
- LIN Products
  - LIN Products

<< BACK to CAN and LIN Demo & Eval Boards

<< BACK

CAN Transceiver

Product Tree

- CAN/CAN FD Transceiver (12V)
  - Single Transceiver
    - ATA6560/61
  - Dual Transceiver
    - ATA6565
  - Partial Networking Transceiver
    - ATA6570
- CAN/CAN FD Transceiver (24V)
  - Overview
  - Single Transceiver
    - MCP2561/2
    - MCP2561/2FD
    - MCP2542/4FD
    - MCP2557/8FD
  - Dual Transceiver
    - MCP25612FD

<< BACK

LIN Products

Product Tree

LIN Transceiver

- ATA663211 (G4) Standalone, 8pin ★

Dual Transceiver

- ATA6670 (G3) 2x LIN Trx, 14pin

Stand alone LIN LDO*

- ATA663201
- ATA663203

General purpose LIN SBCs

- ATA663231/54 (G4) LDO, Reset, 8pin ★
- ATA663232/55 (G4) LDO, HV-Wake, 8pin ★
- ATA663431/54 (G4) LDO, WDT, 16pin ★
- ATA6625-Gx (G4) Next gen ATA6625C ★
- ATA6623/25C (G2) LDO, Reset, 8pin
- ATA6622/4/6C (G2) LIN, LDO, WDT, 20pin
- MCP2021A/2A (G3) LDO, TXE/Fault, 8/14 pin
- MCP2025 (G3) LDO, Reset, 8pin
- MCP2050 (G3) LDO, WWDT, 14 pin

Specialized LIN SBCs

- ATA663331/54 (G4) LDO, Relay Drive

LIN System in Package Solutions

- ATA6612/13C
- ATA6614Q
- ATA6616C/17C
- ATSAMHA1GxxA

★ = Preferred option(s) within similar products

G4: LIN IP Generation 4
G3: LIN IP Generation 3
G2: LIN IP Generation 2

* LIN LDO: LDO footprint compatible with LIN SBC ATA663254

<< BACK

Wireless Interface Products

Product Tree

- **Infrared Products**
  - **Infrared Bit Encoder/Decoder**
    - MCP2120
      HW/SW baud select,
      OSC req.
    - MCP2122
      16x clock req., Low cost
  - **IrDA® Protocol Handler + Bit Encoder/Decoder**
    - MCP2140A
      Low speed, power, cost
    - MCP2150/5
      Higher speed,
      Configurable ID
- **Radio Frequency (RF)**
  - Wireless Products
  - Car Access Products
- **Passive Access AFE**
  - MCP2030
  - MCP2035
    Bodycom

<< BACK to Wireless Interface Demo & Eval Boards

<< BACK to RF Wireless Demo & Eval Boards

<< BACK

Wireless Products

Product Tree

- **Wi-Fi**
  - Wi-Fi Controller
  - MCU + Wi-Fi Controller
  - Wi-Fi Transceiver
- **Bluetooth**
  - Bluetooth Classic
  - Bluetooth Low Energy
- **Embedded Wireless**
  - LoRa®
  - Sub-GHz,MiWi & RF Remotes
  - 2.4GHz, 802.15.4, ZigBee & MiWi

<< BACK to RF Wireless Demo & Eval Boards

<< BACK

Car Access Products

Product Tree

- RF Transceivers
  - ATA5831/32/33
- RF Receivers
  - ATA5781/82/3
- RF Transmitters
  - T5750C
  - T5753C
  - T5754C
- LF Transmitters
  - ATA5291
  - ATA5279C
- LF/RF Keyfob IC
  - ATA5702
  - ATA5700

<< BACK

Wi-Fi Transceiver

Product Tree

- Wi-Fi Transceiver
  - ATWILC1000
  - MRF24WN0MA
  - MRF24WG0MA

<< BACK to RF Wireless Demo & Eval Boards

<< BACK

Wi-Fi Controller

Product Tree

- Wi-Fi Controller
  - ATWINC1500
    802.11 b/g/n SoC & Module

<< BACK to RF Wireless Demo & Eval Boards

<< BACK

MCU + Wi-Fi Controller

Product Tree

MCU + Wi-Fi Controller

SAMW25

<< BACK to RF Wireless Demo & Eval Boards

<< BACK

Bluetooth Classic

Product Tree

Bluetooth Classic

- **RN41/RN42**
  BT 2.1 + EDR module
- **RN52**
  BT 3.0 audio module
- **RN41XV/RN42XV**
  BT 2.1 + EDR socket module for 802.15.4 systems
- **RN41SM/RN42SM**
  BT 2.1 + EDR socket modules

<< BACK to RF Wireless Demo & Eval Boards

<< BACK

Bluetooth Low Energy

Product Tree

Bluetooth Low Energy

- SAMB11-MR210CA
  Standalone BLE 4.1
- BTLC1000-MR110CA
  BLE 4.1 Link Controller
- RN4020
  BLE 4.1, ASCII Interface
- BM70
  BLE 4.2, UI Interface
- RN4870
  BLE 4.2, ASCII Interface

Bluetooth Dual Mode

- RN4678
  BT 4.0 Dual Mode, ASCII Interface
- BM78
  BT 4.0 Dual Mode, UI Interface

<< BACK to RF Wireless Demo & Eval Boards

<< BACK

Embedded Wireless

Product Tree

2.4GHz/802.15.4/ZigBee/MiWi

- **MRF24J40**
  IEEE 802.15.4 Transceiver
- **MRF24J40MA**
  IEEE 802.15.4 Transceiver
- **MRF24J40MD**
  IEEE 802.15.4 Transceiver
- **MRF24J40ME**
  IEEE 802.15.4 Transceiver

<< BACK to RF Wireless Demo & Eval Boards

<< BACK

Embedded Wireless

Product Tree

Sub-GHz/MiWi

- MRF49XA
  433/868/915 MHz Transceiver
- MRF89XA
  868/915/950 MHz Transceiver
- MRF89XAM8A
  868/915/950 MHz Transceiver
- MRF89XAM9A
  868/915/950 MHz Transceiver

Sub-GHz RF Remotes

- MICRF114
  285-445 MHz Transmitter
- MICRF113
  300-450 MHz Transmitter
- MICRF112
  300-450 MHz Transmitter
- MICRF219A
  300-450 MHz Receiver
- MICRF220
  300-450 MHz Receiver
- MRF39RA
  433/868/915 MHz Receiver

<< BACK to RF Wireless Demo & Eval Boards

<< BACK

Embedded Wireless

Product Tree

LoRa® Technology

- **RN2483**
  433/868 MHz LoRa modem
- **RN2903**
  915 MHz LoRa modem

<< BACK to RF Wireless Demo & Eval Boards

<< BACK

USB and I/O Expanders

Product Tree

- **USB Controllers**
  - USB2.0 Hubs
  - USB2.0 Card Readers
  - HSIC Hubs and Card Readers
  - USB3.0 Hubs
  - USB-C and Power Delivery
  - USB3.1 Hubs
- **USB Bridges**
  - MCP2200 USB to UART
  - MCP2210 USB to SPI
  - MCP2221 USB to UART/I²C
- **USB Transceivers**
  - USB33xx PHYs
  - USB Switches
  - USB Protection
  - Micrel USB Transceivers
- **I/O Expanders**
  - **8-bit**
    - **SPI**
      - MCP23S08
      - MCP23S09
    - **I²C**
      - MCP23008
      - MCP23009 3.4 MHz
  - **16-bit**
    - **SPI**
      - MCP23S17
      - MCP23S18
    - **I²C**
      - MCP23016
      - MCP23017
      - MCP23018 3.4 MHz

<< BACK to Interface Demo & Eval Boards

<< BACK

Smoke Detector ICs

Product Tree

Ionization Smoke Detector Front Ends

- **RE46C112** 0.25 Detect V
- **RE46C114** 0.5 Detect V
- **RE46C311/12** Low Leakage Op Amp

CO Detector

- **RE46C800** MCU Companion 3V/9V Horn Driver, Op Amp

Ionization Smoke Detector IC

Temporal Horn Pattern

- **RE46C121** Comparator Output
- **RE46C122** Hush Timer

Continuous Horn Pattern

- **RE46C126** Comparator Output
- **RE46C127** Hush Timer
- **RE46C129**

Temporal and Continuous

- **RE46C120** Comparator Output
- **RE46C152** Hush Timer
- **RE46C162/3** Alarm Memory
- **RE46C180** 9V, Programmable, Alarm Memory & Locate

Photoelectric Smoke Detectors

Temporal and Continuous

- **RE46C165/6/7/8** Alarm Memory
- **RE46C191** 3V, Programmable, Alarm Memory
- **RE46C200** 9V, Programmable, Alarm Memory & Alarm Locate

Continuous Horn Pattern

- **RE46C143** Low Battery Adjust
- **RE46C144** Hush Timer

Temporal Horn Pattern

- **RE46C140** Hush Timer
- **RE46C141** Low Battery Adjust
- **RE46C145** Alternate Diagnostic Mode, Hush Timer

<< BACK to Smoke Detector Demo & Eval Boards

<< BACK

Piezoelectric Horn Drivers

Product Tree

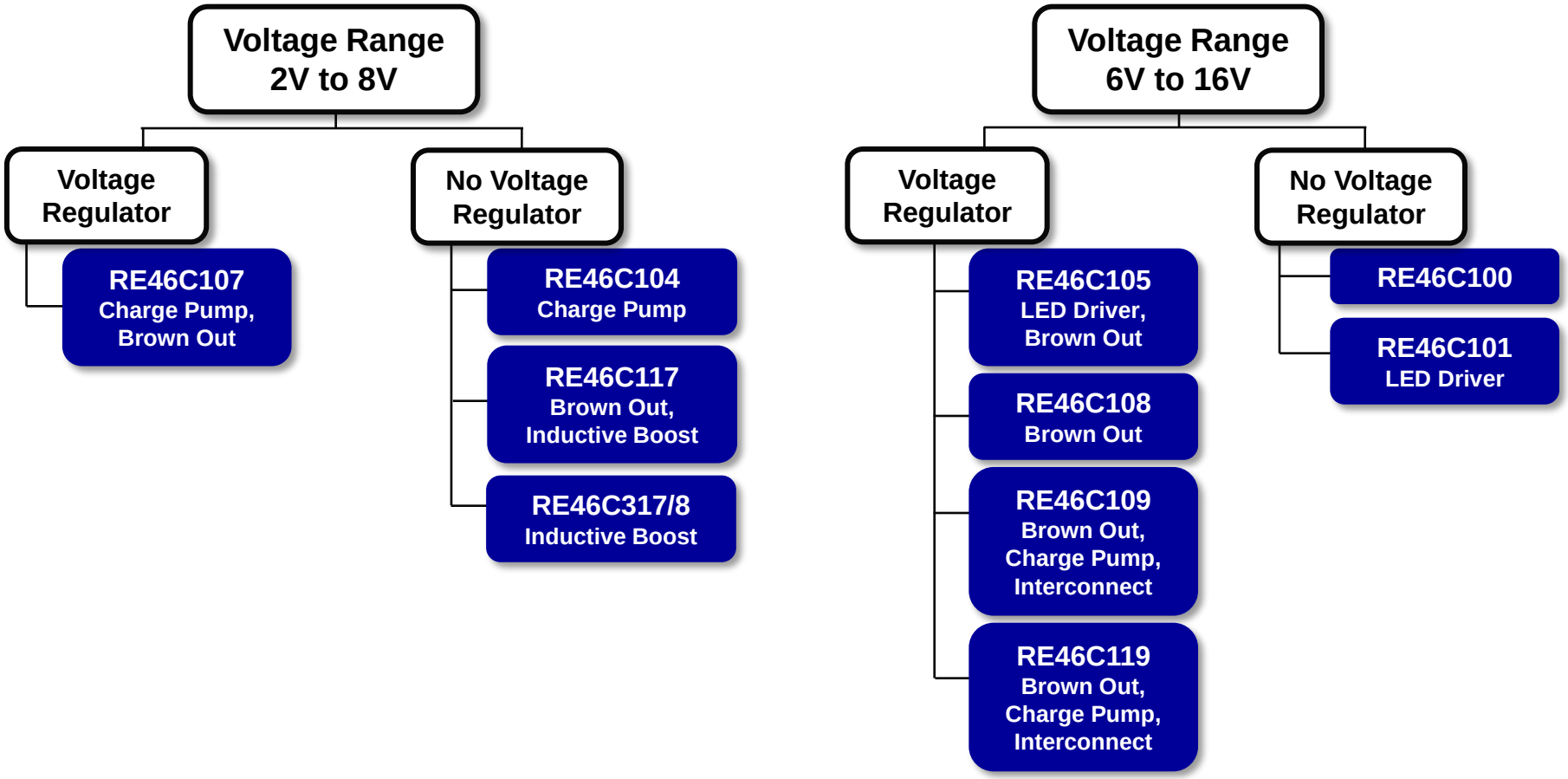

<< BACK

Ethernet

Product Tree

Ethernet Controller

- ENC424J600/ ENC624J600
- ENC28J60
- LAN9217/18
- LAN9220/21
- LAN9250
- LAN9252 EtherCAT®
- KSZ8851

ARCNET Controllers

- COM20019/20/22

USB to Ethernet Controller

- LAN7500
- LAN951X
- LAN9730
- LAN7800/01/50

Ethernet PHYs

- LAN8710A
- LAN8740A/1A/2A
- KSZ8061 Quiet-WIRE®
- KSZ8081
- KSZ8091
- KSZ9031 GigE

Ethernet Switches

- LAN9303/M
- LAN935X
- KSZ8863/73 3-Port
- KSZ8462/3 IEEE1588
- KSZ8864 4-Port
- KSZ8895 5-Port
- KSZ87xx 5-Port GigE Uplink
- KSZ856x 7-Port 10/100 AVB/1588
- KSZ989x 7-Port GigE
- KSZ9567 7-Port GigE AVB/1588
- KSZ9477 7-Port GigE AVB/1588/DLR/HSR

Ethernet PHYs - Coax

- EQCO875SC.3
- EQCO875SC.3-HS
- EQCO850SC.3
- EQCO850SC.3-HS

<< BACK to Ethernet Demo & Eval Boards

<< BACK

Motor Driver ICs

Product Tree

Dual H-Bridge Motor Driver

- MTS62C19A
  10V – 40V, 750mA
- MTS2916A
  10V – 40V, 750mA

Integrated Half-Bridge Motor Drivers

- ATA6826C
  3 Half-bridges
  6.5V – 40V, 1A
- ATA6831/32C
  3 Half-bridges
  6.5V – 40V, 1A
  TJ=150/200°C
- ATA6836/38C
  6 Half-bridges
  6.5V – 40V,
  650/950mA

3Φ Brushless Motor Driver

- MCP8063
  2V – 14V, 1.5A
- MTD6501C/G
  2V – 14V, 800mA
- MTD6501D
  2V – 14V, 500mA
- MTD6502B
  2V – 5.5V, 750mA
- MTD6505
  2V – 5V, 750mA
  Adj. km
- MTD6508
  2V – 5V, 750mA
  Adj. Start-Up

H-Bridge Motor MOSFET Gate Driver

- ATA6823C
  7V – 21V,
  40V Load Dump
  TJ=150°C
  LDO, WWD, LIN
- ATA6824C
  7V – 21V,
  40V Load Dump
  TJ=200°C
  LDO, WWD, SIO

3Φ Brushless Motor MOSFET Gate Driver

- MCP8024
  6V – 28V, 48V Load Dump
  Op Amp & Vreg
- MCP8025
  6V –19V, 48V Load Dump
  Op Amp x 1 & Vreg
- MCP8026
  6V – 28V, 48V Load Dump
  Op Amp x 3 & Vreg

<< BACK to Motor Driver Demo & Eval Boards

<< BACK

High Speed Data/Video

Product Tree

- Serial Digital Interface (SDI)
  - EQCO30T/R5 HD-CCTV
- CoaXPress
  - EQCO31T/R20.3 1.25 to 3.125 Gbps
  - EQCO62T/R20.3 1.25 to 6.25 Gbps

<< BACK to High Speed Data/Video Demo & Eval Boards

<< BACK

Real Time Clock/Calendar

Product Tree

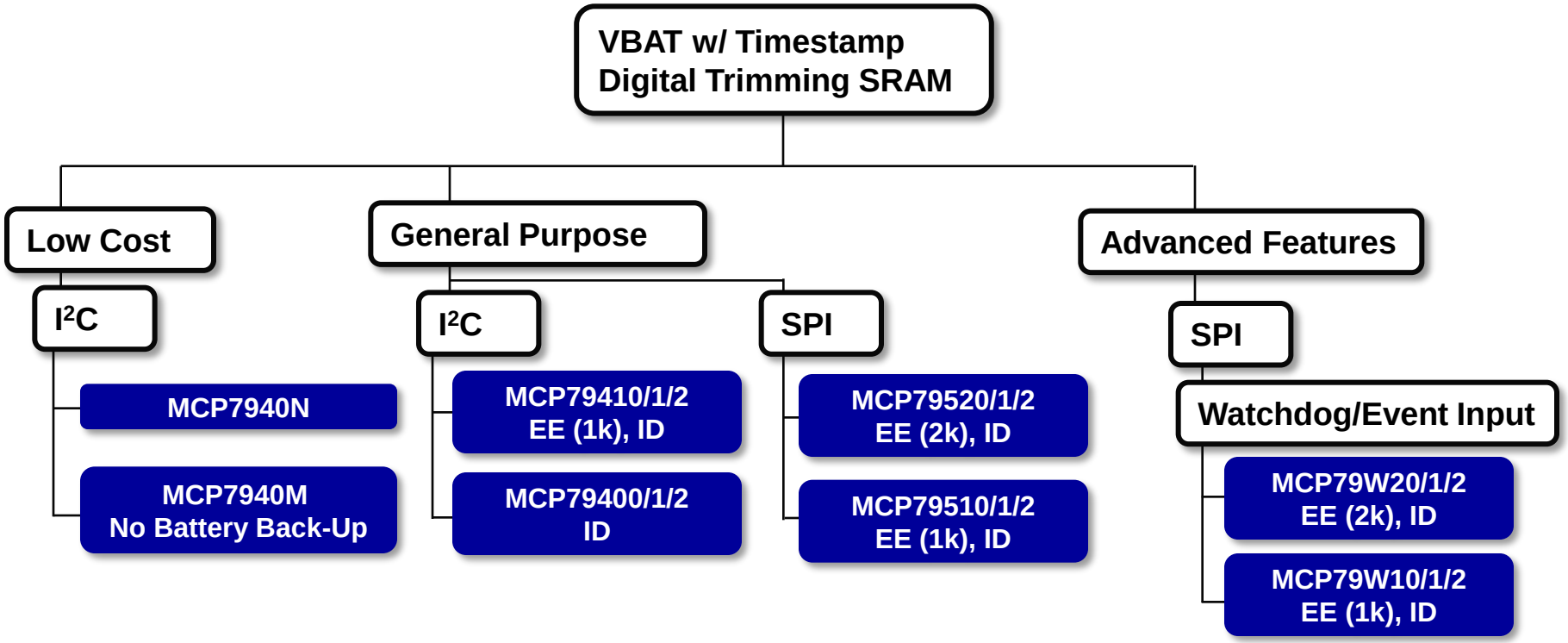

<< BACK to RTCC Demo & Eval Boards

<< BACK

Analog & Interface Demo Boards

Product Tree

LINEAR
- Amplifiers
- Comparators

INTERFACE
- CAN, CAN FD, LIN
- Ethernet
- HV Specialty & Driver
- USB and I/O Expander Products
- High Speed Data/Video
- Real Time Clock/Calendar
- Wireless Products

POWER MANAGEMENT
- DC/DC Convertors
- PWM Controllers
- Battery Chargers
- Power Modules
- Power MOSFET Drivers
- Motor Drivers
- USB Port & Power Controls
- Power Switches
- El Backlight Drivers
- Display/LED Drivers

THERMAL MANAGEMENT
- Temperature Sensors
- Fan Control & Management

CLOCK AND TIMING
- Oscillators/ Clock Generators

MIXED SIGNAL
- A/D Convertors
- Current/DC Power Measurement ICs
- Power Monitoring & Metering
- DACs & Digital Potentiometers

CO & FIRE DETECTION ICs
- Smoke Detector ICs

ULTRASOUND
- Ultrasound Products

CAD/CAE Schematic Symbols & Footprints

Clock & Timing Tools

Development Tools

- ClockWorks Configurator
- TimeFlash Programming Kit

<< BACK to Oscillators

<< BACK to Clock Generators

<< BACK

Voltage Regulator Demo and Eval Boards

AC = Offline Capable

- Inductorless
  - Adjustable Off-Line
    - AC SR086DB1
    - AC SR087DB1
  - Capacitor-Coupled Switch Shunt
    - AC SR10DB1

<< BACK to Inductorless Off-Line Regulators

<< BACK

Ultrasound Demo Boards

Ultrasound MOSFET Drivers

Ultrasound Transmit IC

Ultrasound T/R Switch

<< BACK

Ultrasound MOSFET Driver Demo and Eval Boards

- Dual / 2-Channel
  - MD1213DB1
- Quad / 4-Channel
  - MD1822DB1
  - MD1822DB2
  - MD1822DB3
- 12-Channel
  - 5-Level
    - MD1711DB2
    - MD1715DB2

<< BACK to Ultrasound MOSFET Drivers

<< BACK

EL Backlight Driver Demo and Eval Boards

Single Lamp

- HV816DB2
- HV816DB3
- HV823DB1
- HV825DB1
- HV830DB1
- HV833DB1
- HV857DB1
- HV857LDB1
- HV859DB1
- HV860DB1
- MIC4830
- MIC4832
- MIC4833

Dual Lamp

- HV861DB1

Offline

- HV809DB2

Inductorless

- HV852DB1
- HV853DB1

<< BACK to EL Backlight Products

<< BACK

Thermal Demo and Eval Boards

Serial Output

- TC77 PICtail™ Demo Board
- TC72 PICtail™ Demo Board
- MCP9800 PICtail™ Demo Board
- MCP9800 Data Logger Demo Board 2
- MCP9800 Data Logger Demo Board
- MCP9800 Temp Sensor Demo Bd
- Thermocouple Ref. Design
- EMC1043/53 Eval Board
- EMC1043C Eval Board w/ Off-Board Diode
- EMC1412 Eval Board
- MCP9902 Eval Board

Voltage Output

- MCP9700 PICtail™ Demo Board
- TC1047A PICtail™ Demo Board
- MCP9700 Thermistor Demo Board

Specialty

- MCP9600 Eval Board

General Purpose

- PT100 RTD Eval Board
- PICKit Serial SPI Demo Board
- PICKit Serial I2C Demo Board

<< BACK to Temp Sensor Products

<< BACK

Fan Control
Demo and Eval Boards

Open Loop Fan Controllers

With SMBus/I2C and Alert

EMC2101 Eval Board

<< BACK to Fan Control Products

<< BACK

Current/DC Power Sensor Demo and Eval Boards

Current/DC Power Only

- PAC1710/20 Eval Board
- PAC1921 Eval Board

<< BACK to Current/DC Power Products

<< BACK

USB Port Power Controller Demo & Eval Boards

Host Free Controller

UCS1001 Evaluation Board

Programmable Controllers

UCS1002 Evaluation Board

<< BACK to USB Port Power Controller Products

<< BACK

Linear
Demo and Eval Tools

PGA

- MCP6SX2 Photodiode PICtail™ Demo Board
- MCP6S22 PICtail™ Demo Board
- MCP6S2X Eval Board
- PICKit Serial SPI Demo Board

Amplifiers

- MCP6V01 Thermocouple Auto-Zeroed Reference Design
- MCP6V01 Input Offset Demo Board
- MCP651 Input Offset Evaluation Board
- MCP6031 Photodiode PICtail Plus Demo Board
- MCP661 Line Driver Demo Board
- MCP6N11/MCP6V2x Wheatstone Bridge Ref Design
- MCP6N16 Eval Board
- MCP6421 EMIRR Eval Board
- Humidity Sensor PICtail™ Demo Board
- MCP6XXX Amplifier Evaluation Board 1
- MCP6XXX Amplifier Evaluation Board 2
- MCP6XXX Amplifier Evaluation Board 3
- MCP6XXX Amplifier Evaluation Board 4
- MCP6H04 Evaluation Board
- FilterLab®

<< BACK to Amplifier Products

<< BACK

RF Wireless Demo and Eval Tools

Wireless Evaluation Boards

- Wi-Fi
- Bluetooth
- Sub-GHz/MiWi
- 802.15.4/ZigBee/MiWi
- LoRa®

<< BACK to Wireless Products

<< BACK

Wi-Fi Demo and Eval Boards

MCU + Wi-Fi

- ATSAMW25-XPRO

Wi-Fi Controller

- ATWINC1500-XSTK

Wi-Fi Transceiver

- ATWILC1000-SD Evaluation Kit
- MRF24WN0MA Wi-Fi PICtail/PICtail Plus (AC164153)
- Wi-Fi G Demo Board (DV102412)
- Wi-Fi G PICtail / PICtail Plus (AC164149)

<< BACK to Wireless Products

<< BACK

LoRa™ Development Tools

LoRa™ Technology

- RN2483 PICtail™/PICtail Plus Daughter Board
- RN2483 LoRa™ Mote
- RN2903 PICtail™/PICtail Plus Daughter Board
- RN2903 LoRa® Mote

<< BACK to Wireless Products

<< BACK

Bluetooth Demo Boards

Bluetooth - Data

- ATSAMB11-XPRO
- ATBTLC1000-XSTK
- BM-70-PICtail
- BM-78-PICtail
- RN-41-EK
  RN-42-EK
- RN-4020-PICtail
- RN4678-PICtail
- RN-4870-SNSR

Bluetooth - Audio

- RN52 Bluetooth Audio Evaluation Kit (RN-52-EK)

Bluetooth HCI + PIC32

- PIC32 Bluetooth Audio Development Kit (DV320032)

<< BACK to Wireless Products

<< BACK

RF Wireless Transceivers Demo and Eval Boards

MRF89XA

- MRF89XAM8A PICtail/PICtail Plus Daughter Board (AC164138-1)
- ZENA Wireless Adapter – 915 MHz (AC182015-3)
- ZENA Wireless Adapter – 868 MHz (AC182015-2)

MRF89XAM8A

- MiWi Demo Kit – 868 MHz (DM182016-2)

MRF89XAM9A

- MRF89XAM9A PICtail/PICtail Plus Daughter Board (AC164138-2)
- MiWi Demo Kit – 915 MHz (DM182016-3)

Wireless Network Software

<< BACK to Wireless Products

<< BACK

RF Wireless Transceivers Demo and Eval Boards

MRF24J40

- Remote Control Demo Board with ZENA Wireless Adapter (DM240315-2)
- ZENA Wireless Adapter – 2.4 GHz (AC182015-1)

MRF24J40MA

- MiWi Protocol to Wi-Fi Wireless Demo Kit (DM182018)
- MiWi Demo Kit – 2.4 GHz (DM182016-1)
- MRF24J40MA PICtail / PICtail Plus (AC164134-1)

MRF24J40MD

- MRF24J40MD PICtail / PICtail Plus Daughter Board (AC164134-3)

MRF24J40ME

- MRF24J40ME PICtail / PICtail Plus Daughter Board (AC164143-1)

Wireless Network Software

<< BACK to Wireless Products

<< BACK

DC-DC Converter Demo and Eval Boards

DC-DC Converter Demo & Eval Boards

- Boost Demo & Eval Boards
- Buck Demo & Eval Boards
- Buck-Boost/CUK Demo & Eval Boards
- LDO Demo & Eval Boards
- Charge Pump Demo & Eval Boards
- Multiple Output Regulators Demo & Eval Boards
- Inductorless Off-Line Regulators

<< BACK to DC-DC Converters

<< BACK

LDO Demo and Eval Boards

General Purpose

- SOT223-5 Volt Reg. Eval Bd
- SOT23-3 Volt Reg. Eval Bd
- TO220-3/TO263-3 Volt Reg. Eval Bd
- SOT89-3 Volt Reg. Eval Bd

Evaluation Boards

- MCP1726 Eval Board
- TC1016/17 Eval Board
- MIC38150 Eval Board
- MIC38300 Eval Board
- MIC47050 Eval Board
- MIC47100 Eval Board
- MIC49200 Eval Board
- MIC5165 Eval Board
- MIC5166 Eval Board
- MIC5167 Eval Board
- MIC5234 Eval Board
- MIC59150 Eval Board
- MIC59300 Eval Board
- MIC68400 Eval Board
- MIC69103 Eval Board
- MIC69153 Eval Board
- MIC69302 Eval Board
- MIC69502 Eval Board
- MAQ5280 Eval Board
- MIC5280 Eval Board
- MIC5380 Eval Board
- MIC5301 Eval Board
- MIC5308 Eval Board
- MIC5309 Eval Board
- MIC5365 Eval Board

<< BACK to DC-DC Converters

<< BACK

Charge Pumps
Demo and Eval Boards

Charge Pump

- MCP1256/7/8/9 Eval Bd
- MCP1252 Backlight Demo Bd

<< BACK to DC-DC Converters

<< BACK

Multiple Output Regulators Demo and Eval Boards

Evaluation Boards

- MIC7400
- MIC7401
- MIC23099
- MIC23450
- MIC23451

<< BACK to DC-DC Converters

<< BACK

Buck Switching Regulator Demo and Eval Boards

Evaluation Boards

- MCP1612
- MCP1601
- TC1303B
- TC1303C
- MCP1603
- MCP1602
- MCP16301 600mA Demo
- MCP16301 5V Low Noise Eval Board
- MCP16301 300 mA D2PAK Demo
- MCP16311/2 Sync. Buck Eval Board
- MCP16331 Buck Converter
- MIC2172
- MIC4684
- MIC2207
- MIC22205
- MIC22405
- MIC22705
- MIC4720
- MIC4723
- MIC4724
- MIC4930
- MIC23050
- MIC23031
- MIC23030
- MIC23153
- MIC23158
- MIC23250
- MIC23303
- MIC23603
- MIC2125/6
- MIC24051
- MIC24052
- MIC24053
- MIC24054
- MIC24055
- MIC24056
- MIC28511
- MIC28512

Reference Designs

- MCP1603 Tiny Reference Design

<< BACK to DC-DC Converters

<< BACK

Boost Switching Regulator Demo and Eval Boards

Evaluation Boards

- MCP16251 & MCP1640B Synchronous Boost Eval Board
- MCP1662 LED Driver Eval Board
- MCP1661 HV Boost/SEPIC Board
- MCP1642B 2-Cell to USB Power Eval Board
- MCP1643 1.6A LED Driver Eval Board
- MCP1663 9V/12V/24V Eval Board
- MCP1664 LED Driver Eval Board
- MIC2601
- MIC2605/6
- MIC2619
- MIC2875/6
- MIC2250
- MIC2253
- MIC2295

Reference Designs

- MCP1640 Sync Boost Conv. Eval Board
- MCP1640 Single Quad-A Battery Boost Reference Design
- MCP1640 12V/50mA Two Cells Input Reference Design
- MCP16251 Single Cell Boost w/ Ext. UVLO Reference Design

<< BACK to DC-DC Converters

<< BACK

Buck-Boost/CUK Switching Regulator Demo & Eval Boards

Buck-Boost

- MCP16301 HV Buck-Boost Demo Bd
- MCP16301 High Voltage Cuk LED Driver Board

<< BACK to DC-DC Converters

<< BACK

Battery Management Demo and Eval Boards

Li-Ion Battery Charger

- MCP73831 Eval Kit
- MCP73855 Eval Board
- MCP7382x Eval Board
- MCP73113 Eval Board
- MCP7383x Li-Ion System Power Path Management Ref. Design
- MCP73871 Demo Board with Voltage Prop. Current Control
- MCP73833 Eval Board
- MCP73x23 $LiFePO_4$ Batt. Charger Eval Board
- MCP73837/8 AC/USB Dual Input Battery Charger Eval Bd
- MCP73213 OVP Dual Cell Li-Ion Batt. Charger Eval Brd

PWM Controller Based

- MCP1630 Li-Ion Battery Charger Reference Design
- MCP1630 Li-Ion Battery Charger Multi-Bay Ref. Design
- MCP1630 NiMH Battery Charger Demo Board
- MCP1630V Bidirectional 4-cell Li-Ion Charger Ref Design
- MCP1630 NiMH Battery Charger Reference Design
- MCP1631HV Multi-Chemistry Battery Charger Ref. Design
- MCP1631HV Digitally Controlled Prog. Current Source Ref. Design

<< BACK to Battery Products

<< BACK

Digital Pots and D/A Converter Demo Boards

Digital Pots

- MCP401x/2x Eval Board
- MCP401x Eval Board
- MCP42xx Eval Board
- MCP43xx Eval Board
- MCP46xx Eval Board
- MCP42XX PICtail Plus Daughter Board

General Purpose

- Mixed Signal PICtail™ Demo Bd
- PICKit Serial SPI Demo Board
- PICKit Serial I2C Demo Board

D/A Converter

- MCP4725 Eval Board
- MCP4725 12-bit NV DAC PICtail™ Daughter Board
- MCP47x6 PICtail™ Plus Daughter Board
- MCP4728 Eval board

<< BACK to Digital Pot Products

<< BACK to DAC Products

<< BACK

Power Monitoring & Energy Measurement

Reference Designs

- ATM90E32AS+ SAM4L/SAML22 Poly-Phase Meter
- ATM90E36A+ SAM4L/SAML22 Poly-Phase Meter
- MCP3905A Energy Meter
- MCP3911+PIC18F85K90 Anti-Tamper Meter
- MCP6L2 PIC18F66J93 Low Cost Meter
- MCP39F501 Power Meter Demo
- MCP39F501 Power Monitor PICTail™
- MCP39F511 Power Meter Demo
- MCP39F521 Power Meter Demo
- MCP39F511N Power Meter Demo

Evaluation Boards

- ATSAM4CMS / ATSAM4CMP DB
- MCP3910 Eval board
- MCP3911 Eval board
- MCP3919 Eval board
- MCP3912 Eval board
- MCP3913 Eval board
- MCP3914 Eval board
- MCP3901 Eval board
- MCP3903 Eval board
- ATM90EXX Demo Boards

<< BACK to Power Monitoring/Metering ICs

<< BACK

A/D Converter Demo Boards

Pipelined ADC

- MCP37X3X-200 16-bit ADC Evaluation Board
- MCP37X1X-200 12-bit ADC Evaluation Board
- MCP37XXX-200 14-bit ADC Evaluation Board
- MCP37XXX Data Capture Card

Delta-Sigma ADC

- MCP3421 Battery Fuel Gauge Demo Board
- MCP3421 Weight Scale Demo Board
- MCP3421 SOT-23 Eval Board
- MCP342x Eval Boards
- MCP3551 PICtail™ Demo Board
- MCP355X Tiny App. Sensor Demo Board
- MCP355X Sensor App. Dev Board
- Thermocouple Ref. Design

SAR ADC

- MCP3221 PICtail™ Demo Board
- Mixed Signal PICtail™ Demo Bd

<< BACK to Pipelined A/D Converters
<< BACK to SAR A/D Converters
<< BACK to Delta-Sigma A/D Converters
<< BACK

Interface Demo and Eval Boards

I/O Expander

- MCP23x17 Eval Board
- MCP23x08 Eval Board
- GPIO Expander Keypad Demo Board
- PICKit Serial SPI Demo Board
- PICKit Serial I²C™ Demo Board

Passive Access AFE

- MCP2030 Bidirectional Comm. Demo Kit

Infrared

- MCP2140 Wireless Temp Demo Board

USB Bridges

- MCP2221 Breakout Module
- MCP2200 USB to RS232 demo board
- MCP2200 Breakout Module
- MCP2210 Breakout Module
- MCP2210 Eval Board

USB Controllers

- USB Eval Boards

<< BACK to Wireless Products

<< BACK to USB and I/O Expander Products

<< BACK

Ethernet Demo and Eval Boards

Ethernet

- PICtail Ethernet Board
- PHY (Transceiver) Eval Boards
- Switch Eval Boards
- Controller / EtherCAT Eval Boards
- Ethernet Bridge Eval Boards
- LANCheck
- EQCO-FastECoax-7501.2 Adapters

<< BACK to Ethernet

<< BACK

High Speed Data/Video Demo and Eval Boards

Eval Boards

- EVB-DBSUB1584
- EVB-DBSUB1586

Modules

- EQCO-SDI-30-7502

<< BACK to High Speed Data/Video

<< BACK

CAN and LIN Demo and Eval Boards

CAN

- MCP2515/2510 Developer's Kit
- MCP2515 PICtail™ Demo Board
- MCP2515 PICtail™ Plus Demo Board
- MCP2515 CAN Bus Monitor Demo Board

LIN

- CAN/LIN PICtail Plus Daughter Board
- PICDEM CAN-LIN Demo Boards
- LIN Serial Analyzer
- Automotive Ambient Lighting Module
- ATA663x Demo Board

<< BACK to CAN and LIN Products

<< BACK

Power MOSFET Drivers Demo and Eval Boards

Evaluation Boards

- MIC5060
- MIC4478/79/80
- MIC4102
- MIC4224
- MIC4605
- MIC4606
- MIC4607
- MIC4608
- MIC4414/5
- MIC5019

<< BACK to MOSFET Drivers

<< BACK

Power Modules
Demo and Eval Boards

Evaluation Boards

- MIC45516
- MIC45205
- MIC45208
- MIC45212
- MIC28304
- MIC33030
- MIC33050
- MIC33153
- MIC3385
- MIC45404

<< BACK to Power Modules

<< BACK

Power Switches Demo and Eval Boards

Power Switches

- MIC95410
- MIC9516X

USB Power Switches

- MIC2026A
- MIC2033
- MIC2039
- UCS2112

<< BACK to Power Switches

<< BACK

Switching Controller Demo and Eval Boards

DC/DC Conversion

- MCP1630 Dual Output Buck Converter Reference Design
- MCP1630, 1A Demo Board
- MCP1630 Automotive Boost Conv Demo Board
- MCP1630 Coupled Induct. Boost Conv Demo Board
- MCP1630 Boost Mode LED Driver Demo Board
- MCP1630 Automotive, Triple Conv. Demo Board
- MCP1632 300 kHz Boost Converter Demo Board
- MCP19035 300 kHz Eval Bd
- MCP19035 600 kHz Eval Bd
- MCP19111 Eval Board
- MCP19114 Flyback Standalone Eval Board
- MCP19215 Dual SEPIC Boost Eval Board
- MCP2101/2 Eval Board
- MCP2169 Eval Board
- MIC2196 LED Driver Eval Bd
- MCP2104 Eval Board
- MCP2103 Eval Board
- MCP2130/1 Eval Board
- MCP2176 5A Eval Board

Battery Management

- MCP1630 Li-Ion Battery Charger Reference Design
- MCP1630 Li-Ion Battery Charger Multi-Bay Reference Design
- MCP1630 NiMH Battery Charger Demo Board
- MCP1630V Bidirectional 4-cell Li-Ion Charger Ref Design
- MCP1631HV Multi-Chemistry Battery Charger Ref. Design
- MCP1631HV Digitally Controlled Prog. Current Source Ref. Design

<< BACK to PWM Controllers

<< BACK to Power MOSFETs

<< BACK

Safety & Security

Smoke Detector

- RE46C190/1 Demo Board

<< BACK to Smoke Detector Products

<< BACK

Motor Drive

Dual H-Bridge Driver

- MTS2916A Dual Full-Bridge Stepper Motor Drive Eval Brd

Half-Bridge Drivers

- ATA6826C 3 Half-bridges Eval Board
- ATA6831 / 32C w/ PWM 3 Half-bridges Eval Board
- ATA6831 / 32C BLDC Eval Board
- ATA6836/38C 6 Half-bridges Eval Board

3Φ BLDC Motor Controller

- MTD6505 3-Phase BLDC Sensorless Fan Controller DB
- MCP8024 BLDC Motor Driver Evaluation Board
- MCP8063 12V Sensorless Fan Controller Demo Kit
- MCP8025 BLDC Motor Driver Evaluation Board

H-Bridge Motor Gate Driver

- ATA6823C H-Bridge LDO, WWD, LIN
- ATA6824C H-Bridge TJ=200°C LDO, WWD, SIO

<< BACK to Motor Drive Products

<< BACK

Real Time Clock/Calendar

MCP7941X RTCC PICtail Plus Daughter Board

MCP795XX RTCC PICtail Plus Daughter Board

<< BACK to Real Time Clock/Calendar

<< BACK

Ultrasound Transmit IC Demo and Eval Boards

- **Beamformers**
  - MD2131DB1
  - MD2131DB2
  - MD2134DB1
  - MD2134DB2
- **Continuous Wave**
  - CW01DB1
- **Transmit Pulsers**
  - **4-Channel**
    - HV748DB1
    - AN-H59DB1
  - **8-Channel**
    - HV7350DB1
    - HV7351 DB
    - HV7355DB1

<< BACK to Ultrasound Transmit ICs

<< BACK

Ultrasound Transmit/Receive Switch Demo and Eval Boards

- 1-Channel
  - MD0100DB1
- 4-Channel
  - MD0101DB1

<< BACK to Ultrasound Transmit/Receive Switch ICs

<< BACK

HV Specialty Demo and Eval Boards

Lens Drivers
- HV892DB1

Fan Controller
- HV7100DB1

MEMS Drivers/ HV Array Amplifiers
- HV254DB1
- HV256DB1
- HV257DB2
- HV264DB1

<< BACK to Application Specific
<< BACK to Amplifiers / MEMs Drivers
<< BACK

LED Driver Demo and Eval Boards

General Purpose

- HV9910BDB1
- HV9910BDB2
- HV9910BDB3
- HV9910BDB7
- HV9918DB1
- HV9919BDB1
- HV9921DB1
- HV9922DB1
- HV9922DB2
- HV9861ADB1
- HV9861ADB2
- HV9923DB1
- HV9925DB1
- HV9930DB1
- HV9930DB2
- HV9931DB1
- HV9931DB2
- HV9931DB5
- HV9805 230V Boost
- HV9805 230V SEPIC
- HV9805 120V Boost
- HV980100/101 Eval Brd
- MIC3202 Eval Brd
- MIC3203 Eval Brd
- MIC3223 Eval Brd
- MIC3231 Eval Brd
- MIC3263 Eval Brd
- MIC4801 Eval Brd
- MIC4802 Eval Brd
- MIC4811 Eval Brd
- MIC4812 Eval Brd
- MIC3263 Eval Brd
- MIC2298 Eval Brd
- MIC2299 Eval Brd
- MIC2297 Eval Brd
- MIC2870 Eval Brd
- MIC2874 Eval Brd

<< BACK to LED Drivers

Backlighting

- HV9911DB1
- HV9911DB2
- HV9911DB3
- HV9911DB4
- HV9912DB1
- HV9961DB1
- HV9980DB1
- HV9967BDB1

Sequential Linear

- CL88020 120V_{AC} 8.5W

Automotive

- AT9919DB1
- AT9933DB1
- MAQ3203 Eval Brd

<< BACK

General Purpose Demo and Eval Boards

- 14-pin SOIC/TSSOP/PDIP Eval Board
- 8-pin SOIC/MSOP/TSSOP/PDIP Eval Board
- 5 and 6-pin SOT-23 Eval Board
- 3-pin SOT-23 Eval Board
- PICKit Serial SPI Demo Board
- PICKit Serial I^2C Demo Board
- Magnetic Field Evaluation Board
- Electrical Field Evaluation Board
- PSRR and Digital Noise Evaluation Board
- MICUSB Serial Programmer

<< BACK to Supervisor Products
<< BACK to MOSFET Driver Products
<< BACK

General Purpose Comparator Demo and Eval Boards

- 5 and 6-pin SOT-23 Eval Board
- 8-pin SOIC/MSOP/TSSOP/PDIP Eval Board
- 14-pin SOIC/TSSOP/PDIP Eval Board
- Electrical Field Eval Board
- Magnetic Field Eval Board
- PSRR and Digital Noise Evaluation Board

<< BACK to Comparator Products

<< BACK

Appendix

Product Pages

DSC6000

Ultra-Small, Ultra-Low Power MEMS Oscillator

Online Datasheet

Features:

- Wide Frequency Range:
- DSC60xx: 2kHz to 80MHz
- DSC61xx: 2KHz to 100MHz
- Ultra Low Power Consumption:
  - DSC60xx: 1.25mA/10.5uA (Active/Stdby)
  - DSC61xx: 3mA/10.5uA (Active/Stdby)
- Ultra Small Footprints:
  - 1.6mmx1.2mm, 2.0mmx1.6mm,
  - 2.5mmx2.0mm, 3.2mmx2.5mm
- Frequency Select input supports 2 frequencies
- High Stability: ±25, ±50 ppm
- Excellent Shock & Vibration Immunity
- Qualified to MIL-STD-883
- High Reliability
- 20x better MTF than quartz oscillators
- Supply Range of 1.71 to 3.63 V
- Temperature Range:
  - Industrial: -40° to 85° C Ext.
  - Commercial: -20° to 70° C

DSC6001/03/11/13/21/23/41/43/51/53/61/63

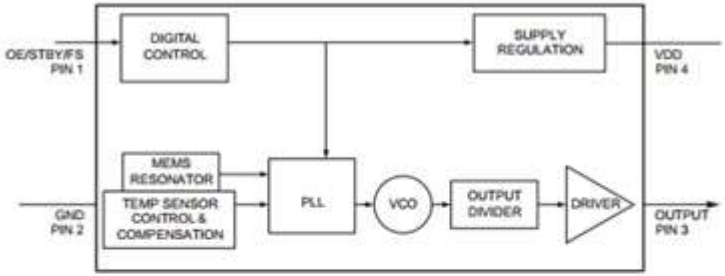

DSC6083 (kHz Output)

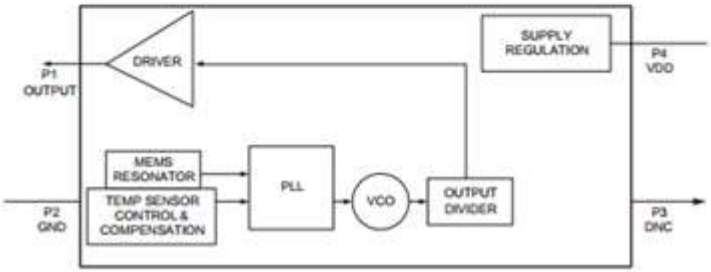

<< BACK

DSC1001/3/4

High performance oscillators

Online Datasheet

Features:

- Frequency Range: 1 to 150MHz
- Drive Strength: 15pF, 25pF, 40pF
- Exceptional Stability over Temperature:
  - ±10 PPM, ±25 PPM, ±50 PPM
- Operating voltage of 1.7V to 3.6V
- Operating Temperature Range:
  - Extended Industrial -40°C to 105°C
  - Industrial -40°C to 85°C
  - Extended Commercial -20°C to 70°C
  - Commercial 0°C to 70°C
- Low Operating and Standby Current:
  - 5mA Operating (40MHz)
  - 15µA Standby
- Ultra Miniature Footprint:
  - 2.5mm x 2.0mm x 0.85mm
  - 3.2mm x 2.5mm x 0.85mm
  - 5.0mm x 3.2mm x 0.85mm
  - 7.0mm x 5.0mm x 0.85mm
- MIL-STD 883 Shock and Vibration Resistant
- AEC-Q100 Qualified

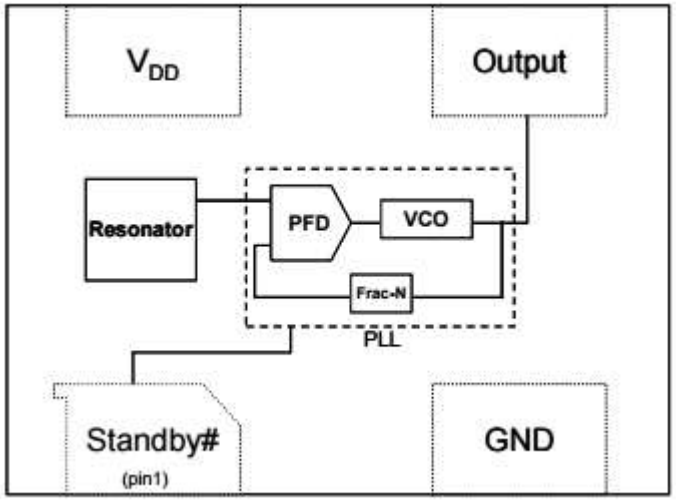

<< BACK

DSC1101/1121

High performance oscillators

Online Datasheet

Features:

- Low RMS Phase Jitter: <1 ps (typ.)
- High Stability: ±10, ±25, ±50 ppm
- Wide Temperature Range:
  - Automotive: -55°C to 125°C
  - Ext. Industrial: -40°C to 105°C
  - Industrial: -40°C to 85°C
  - Ext. commercial: -20°C to 70°C
- High Supply Noise Rejection: -50dBc
- Wide Freq. Range: 2.3 to 170MHz
- Small Industry Standard Footprints:
  - 2.5mm x 2.0mm3.2mm x 2.5mm,
  - 5.0mm x 3.2mm, & 7.0mm x 5.0mm
- Excellent Shock & Vibration Immunity
- Qualified to MIL-STD-883
- High Reliability:
  - 20x better MTF than quartz oscillators
- Low Current Consumption
- Supply Range of 2.25V to 3.6V
- Standby & Output Enable Function

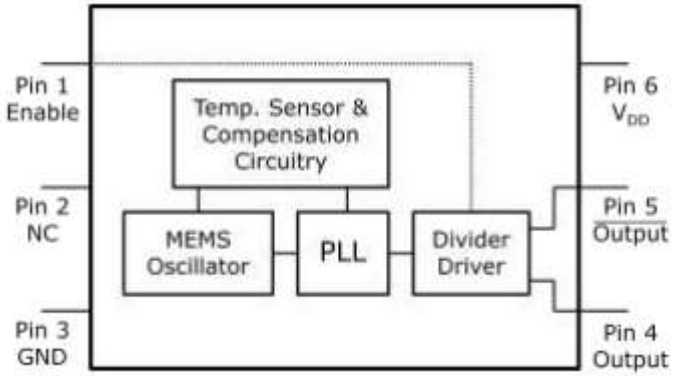

<< BACK

DSC1102/1122

LVPECL

Online Datasheet

Features:

- Low RMS Phase Jitter: <1 ps (typ.)
- High Stability: ±10, ±25, ±50 ppm
- Wide Temperature Range:
  - Industrial: -40°C to 85°C
  - Extended commercial: -20°C to 70°C
- High Supply Noise Rejection: -50dBc
- Wide Freq. Range: 2.3 to 460MHz
- Small Industry Standard Footprints:
  - 2.5mm x 2.0mm3.2mm x 2.5mm,
  - 5.0mm x 3.2mm, & 7.0mm x 5.0mm
- Excellent Shock & Vibration Immunity:
  - Qualified to MIL-STD-883
- High Reliability:
  - 20x better MTF than quartz oscillators
- Low Current Consumption
- Supply Range of 2.25V to 3.6V
- Standby & Output Enable Function
- LVDS & HCSL Versions Available

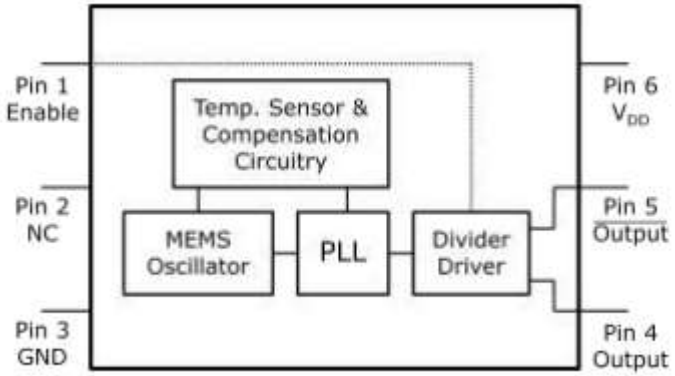

<< BACK

DSC1103/1123

LVDS

Online Datasheet

Features:

- Low RMS Phase Jitter: <1 ps (typ.)
- High Stability: ±10, ±25, ±50 ppm
- Wide Temperature Range:
  - Industrial: -40°C to 85°C
  - Extended commercial: -20°C to 70°C
- High Supply Noise Rejection: -50dBc
- Wide Freq. Range: 2.3 to 460MHz
- Small Industry Standard Footprints:
  - 2.5mm x 2.0mm3.2mm x 2.5mm,
  - 5.0mm x 3.2mm, & 7.0mm x 5.0mm
- Excellent Shock & Vibration Immunity:
  - Qualified to MIL-STD-883
- High Reliability:
  - 20x better MTF than quartz oscillators
- Low Current Consumption
- Supply Range of 2.25V to 3.6V
- Standby & Output Enable Function
- LVPECL & HCSL Versions Available

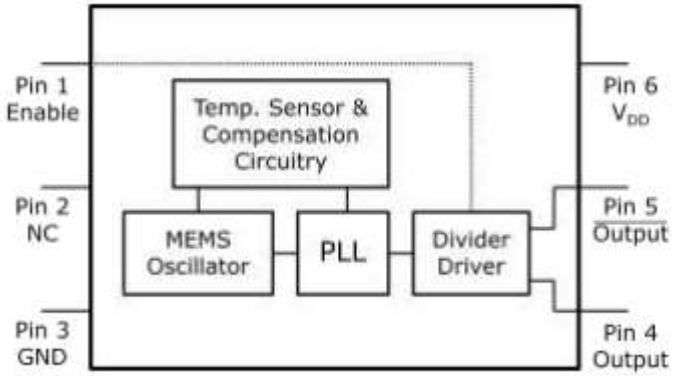

<< BACK

DSC1104/1124

HSCL

Online Datasheet

Features:

- Low RMS Phase Jitter: <1 ps (typ.)
- High Stability: ±10, ±25, ±50 ppm
- Wide Temperature Range
  - Industrial: -40°C to 85°C
  - Extended commercial: -20°C to 70°C
- High Supply Noise Rejection: -50dBc
- Wide Freq. Range: 2.3 to 460MHz
- Small Industry Standard Footprints
  - 2.5mm x 2.0mm3.2mm x 2.5mm,
  - 5.0mm x 3.2mm, & 7.0mm x 5.0mm
- Excellent Shock & Vibration Immunity
  - Qualified to MIL-STD-883
- High Reliability
  - 20x better MTF than quartz oscillators
- Low Current Consumption
- Supply Range of 2.25V to 3.6V
- Standby & Output Enable Function
- LVDS & LVPECL Versions Available

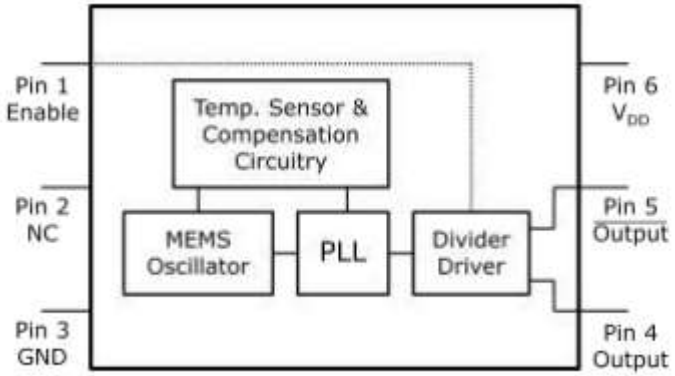

<< BACK

MX55/57

Ultra-low Jitter Industry Standard Crystal Oscillators

Online Datasheet

Features:

- Typical phase jitter ranging from 160fs to 230fs
- Supports 1 output
- Integrated crystal
- Output up to 850MHz
- Programmable output buffers
- O/E Pin selectable
- Industry standard package:
    - MX55 - 3.2mm x 5mm
    - MX57 - 5mm x 7mm

Part Number	Output Frequency (MHz)	Output Format	Frequency Stability (ppm)	Jitter (typ) (ps RMS)	Supply current (mA)	Supply voltage (V)	Temp. Range (°C)	Package size (mmxmm)	Custom Configuration
MX57	<840	LVCMOS LVPECL LVDS HSCL	±50	0.2	70	2.25 to 3.63	-20 to 70 -40 to 85	7.0x5.0 6L	ClockWorks Web tool
MX55	<840							5.0x3.2 6L	
MX85	<840			0.2	90			7.0x5.0 38-PIN LGA	

<< BACK

MX85

HSCL

Online Datasheet

Features:

- 230fs RMS Phase Jitter of Fanout
- Supports 5 outputs and 2 distinct frequencies up to –
  - 840MHz
- Independently configurable output buffers:
  - LVDS, LVPECL, HCSL, CMOS
- Complete clocking solution integrates the -
  - crystal, synthesizer, and fanout
- OTP configurable, customized samples within days
- FSEL enables in-circuit frequency selection
- 3.3V or 2.5V operation
- -40°C to +85°C ambient temperature range

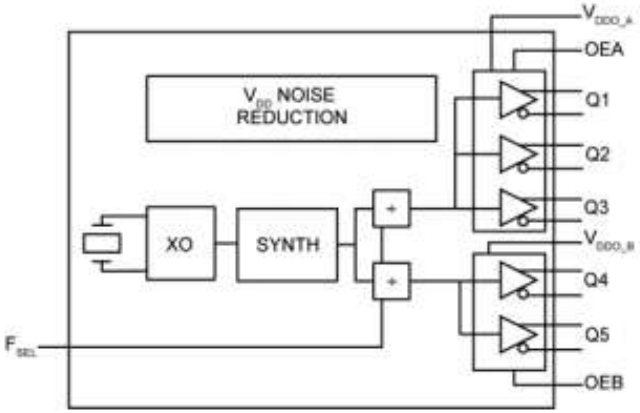

Part Number	Output Frequency (MHz)	Output Format	Frequency Stability (ppm)	Jitter (typ) (ps RMS)	Supply current (mA)	Supply voltage (V)	Temp. Range (°C)	Package size (mmxmm)	Custom Configuration
MX57	<840	LVCMOS LVPECL LVDS HSCL	±50	0.2	70	2.25 to 3.63	-20 to 70 -40 to 85	7.0x5.0 6L	ClockWorks Web tool
MX55	<840							5.0x3.2 6L	
MX85	<840			0.2	90			7.0x5.0 38-PIN LGA	

<< BACK

MXT57

High-Frequency TCXO Oscillator

Online Datasheet

Features:

- Supports 1 LVCMOS/LVPECL/LVDS/HSCL output
- Typical phase jitter: 0.2ps
- Guaranteed ±2.5ppm over -40°C to +85°C
- ±5ppm total frequency stability
- Integrated crystal
- Output up to 850MHz
- Programmable output buffers
- O/E Pin selectable
- Industry standard 6-Pin 7mm x 5mm LGA package

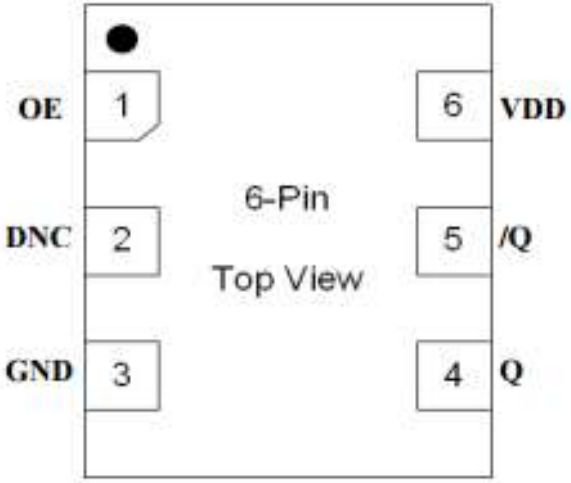

<< BACK

DSC2XXX

Low-Jitter Configurable Dual LVDS Oscillator

Online Datasheet

Features:

- Low RMS Phase Jitter: 1.5 ps (typ.)
- High Stability: ±10, ±25, ±50 ppm
- Wide Temperature Range: -20°C to 105°C
- High Supply Noise Rejection: -50dBc
- Two configurable independent outputs:
- LVCMOS, LVPECL, LVDS, HCSL
- Pin-Selectable Configurations:
- 3-bit Output Frequency Combinations
- Short Lead Times: 2 Weeks
- Wide Freq. Range: 2.3 to 460MHz
- Miniature Footprint of 3.2mm x 2.5mm
- Excellent Shock & Vibration Immunity
- Qualified to MIL-STD-883
- High Reliability:
    - 20x better MTF than quartz oscillators
- Supply Range of 2.25V to 3.6V
- DSC20XX supports pin control
- DSC21xx supports I²C interface
- DSC22XX supports SPI interface

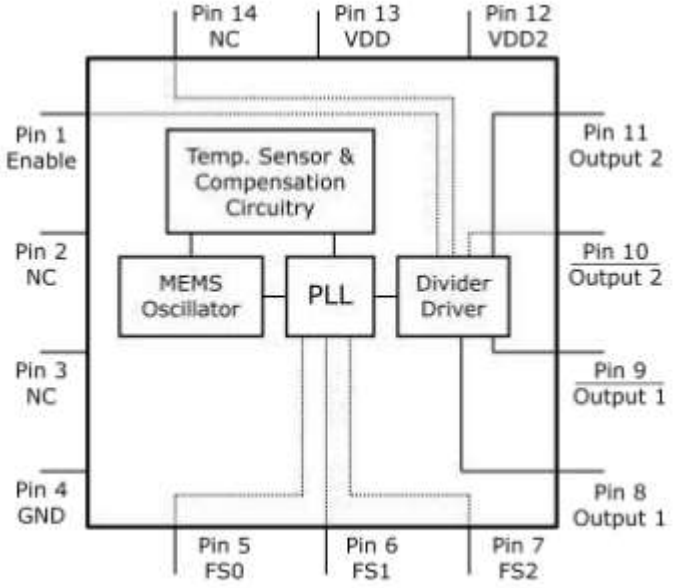

<< BACK

DSC2311

Crystal-less™ Configurable Two-Output Clock Generator

Online Datasheet

Features:

- Two Simultaneous CMOS Outputs:
  - Output 1 Range: 2.3 to 170MHz
  - Output 2 Range: 2.3 to 170MHz
- Low RMS Phase Jitter: <1 ps (typ.)
- High Stability: ±25 ppm; ±50 ppm
- Wide Temperature Range:
  - Automotive: -55°C to 125°C
  - Ext. Industrial: -40°C to 105°C
  - Industrial: -40°C to 85°C
  - Ext. Commercial: -20°C to 70°C
- High Supply Noise Rejection: -50dBc
- High Shock & Vibration Immunity:
  - Qualified to MIL-STD-883
- High Reliability:
  - 20x better MTF than crystal-based clock generator designs
- Supply Range of 2.25V to 3.6V

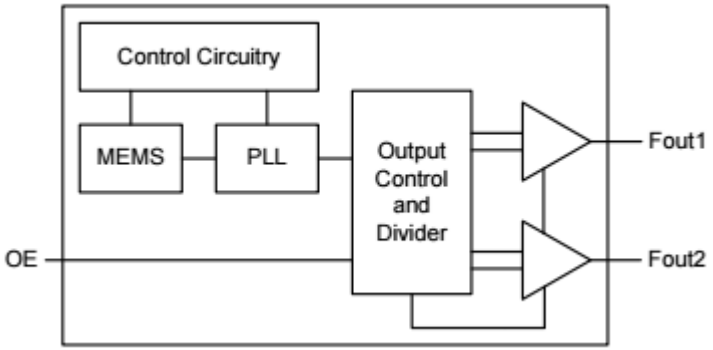

<< BACK

DSC400

Configurable Four Output, Low Jitter Crystal-less™ Clock Generator

Online Datasheet

Features:

- Low RMS Phase Jitter: <1ps (typ.)
- High Stability: ±25ppm, ±50ppm
- Wide Temperature Range:
  - Ext. commercial: -20°C to +70°C
  - Industrial: -40°C to +85°C
- High Supply Noise Rejection: -50dBc
- Wide frequency range: 2.3MHz to 460MHz
- 20-pin QFN footprint (5.0mm x 3.2mm)
- Excellent shock and vibration immunity:
  - Qualified to MIL-STD-883
- Four format-configurable outputs:
  - LVPECL, LVDS, HCSL, LVCMOS
- Available pin-selectable frequency table:
  - 1 pin per bank for two frequency sets
- High Reliability: 20x better MTF than quartz-based devices
- Wide supply range of 2.25V to 3.6V
- AEC-Q100 Automotive qualified

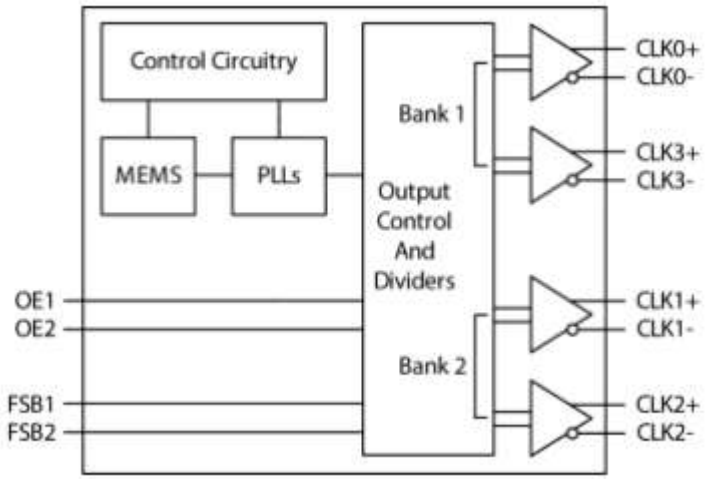

<< BACK

DSC400

Configurable Four Output, Low Jitter Crystal-less™ Clock Generator

Online Datasheet

Features:

- Low RMS Phase Jitter: <1ps (typ.)
- High Stability: ±25ppm, ±50ppm
- Wide Temperature Range:
  - Ext. commercial: -20°C to +70°C
  - Industrial: -40°C to +85°C
- High Supply Noise Rejection: -50dBc
- Wide frequency range: 2.3MHz to 460MHz
- 20-pin QFN footprint (5.0mm x 3.2mm)
- Excellent shock and vibration immunity:
  - Qualified to MIL-STD-883
- Four format-configurable outputs:
  - LVPECL, LVDS, HCSL, LVCMOS
- Available pin-selectable frequency table:
  - 1 pin per bank for two frequency sets
- High Reliability: 20x better MTF than quartz -- based devices
- Wide supply range of 2.25V to 3.6V
- AEC-Q100 Automotive qualified

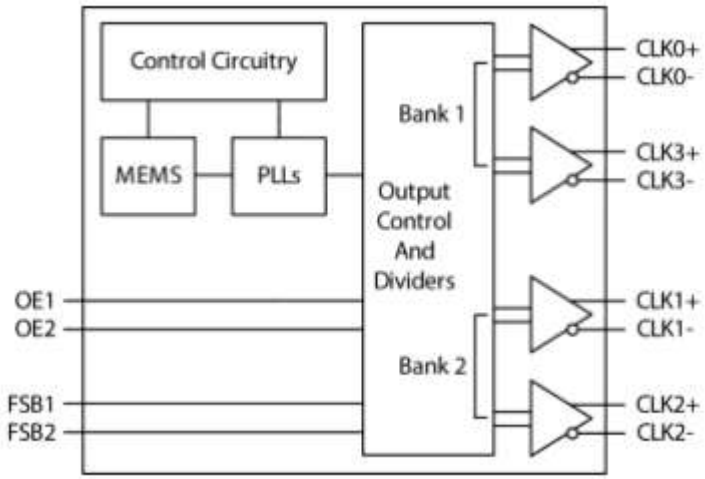

<< BACK

MX85

HSCL

Online Datasheet

Features:

- 230fs RMS Phase Jitter of Fanout
- Supports 5 outputs and 2 distinct frequencies:
  - Up to 840MHz
- Independently configurable output buffers:
  - LVDS, LVPECL, HCSL, CMOS
- Complete clocking solution integrates the
- crystal, synthesizer, and fanout
- OTP configurable, customized samples within days
- FSEL enables in-circuit frequency selection
- 3.3V or 2.5V operation
- -40°C to +85°C ambient temperature range

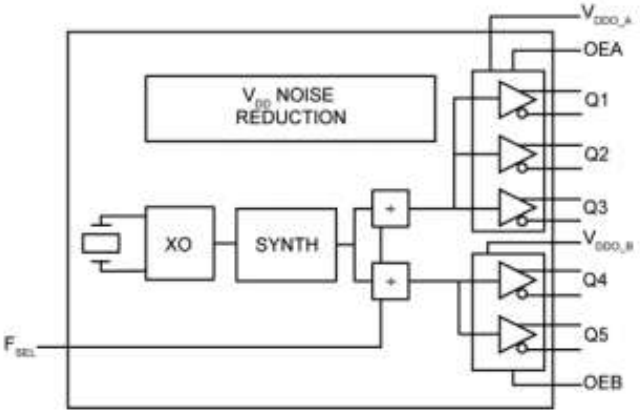

Part Number	Output Frequency (MHz)	Output Format	Frequency Stability (ppm)	Jitter (typ) (ps RMS)	Supply current (mA)	Supply voltage (V)	Temp. Range (°C)	Package size (mmxmm)	Custom Configuration
MX57	<840	LVCMOS LVPECL LVDS HSCL	±50	0.2	70	2.25 to 3.63	-20 to 70 -40 to 85	7.0x5.0 6L	ClockWorks Web tool
MX55	<840							5.0x3.2 6L	
MX85	<840			0.2	90			7.0x5.0 38-PIN LGA	

<< BACK

PL500-17

Low cost, high performance and low phase noise VCXO

Online Datasheet

Features:

- VCXO output for the 17MHz to 36MHz range
- Low phase noise (-130dBc @ 10kHz offset at –- 35.328MHz)
- LVCMOS output with OE tri-state control
- 17 to 36MHz fundamental crystal input
- Integrated high linearity variable capacitors
- 8mA drive capability at TTL output
- ±150 ppm pull range, max 5% (typ.) linearity
- Low jitter (RMS): 2.5ps period jitter
- 2.5V to 3.3V operation
- Available in: 8-Pin SOP, 6-pin SOT23, and Die

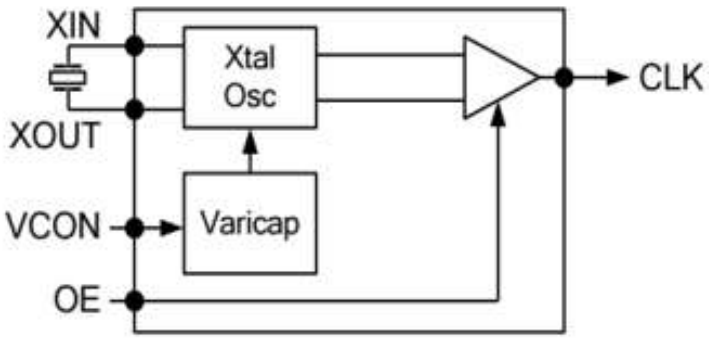

<< BACK

PL560-47

Balanced Oscillator

Online Datasheet

Features:

- Non-PLL frequency multiplication
- Input frequency from 30-200MHz
- Output frequency from 60-800MHz
- Ultra-low jitter:
  - RMS phase jitter <0.25ps - - (12kHz-20MHz)
  - RMS random period jitter <25ps
- Low phase noise:
  - -142 dBc/Hz @100kHz offset from 155.52MHz
  - -150 dBc/Hz @10MHz offset from 155.52MHz
- High linearity pull range (typ. 5%)
- Low phase noise and jitter:
  - Equivalent to fundamental crystal at the output frequency
- ±120 PPM pullability VCXO
- Low input frequency eliminates the need for expensive crystals
- Differential output levels (PECL, LVDS), or single-ended CMOS
- Single 3.3V, ±10% power supply
- Temperature Range:
  - Commercial 0°C to +70°C
  - Industrial -40°C to +85°C
- Available in 16-pin TSSOP, 3x3 QFN packages, and die

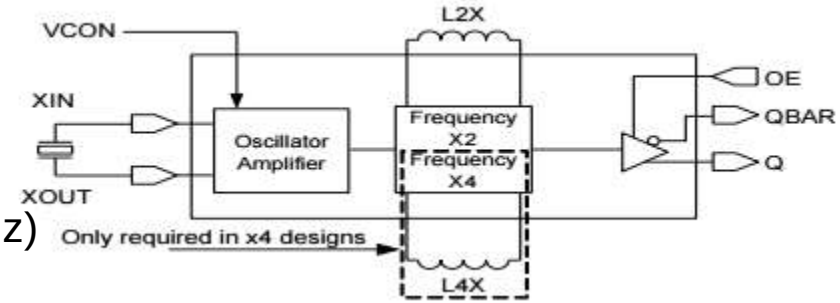

<< BACK

PL610-01

1.8V to 3.3V, 1 MHz to 130 MHz XO IC

Online Datasheet

Features:

- Wide frequency coverage, programmable, advanced oscillator design
- Programmable “Odd/Even” Divider up to ÷63
- Direct oscillation operation w/ optional –
  - programmable features:
    - Output Drive Strength (4, 8, or 16mA)
    - 6-bit Odd/Even Output Divider
- Input Frequency:
    - Fundamental Crystal: 5MHz to 130MHz
    - Reference Clock: 1MHz to 130MHz
- Supports CMOS or Sine Wave input clock
- Output Frequency: 20kHz to 130MHz
- Very low Jitter and Phase Noise
- Low current consumption
- Single 1.8V - 3.3V ±10% power supply
- Industrial temperature range: -40°C to +85°C
- Available in 6-pin DFN, SOT-23 packages and die

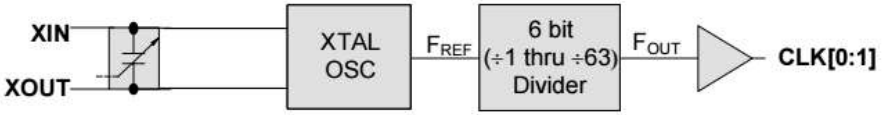

<< BACK

MX85

HSCL

Online Datasheet

Features:

- 230fs RMS Phase Jitter of Fanout
- Supports 5 outputs and 2 distinct frequencies up to -
  - 840MHz
- Independently configurable output buffers:
  - LVDS, LVPECL, HCSL, CMOS
- Complete clocking solution integrates the -
  - crystal, synthesizer, and fanout
- OTP configurable, customized samples within days
- FSEL enables in-circuit frequency selection
- 3.3V or 2.5V operation
- -40°C to +85°C ambient temperature range

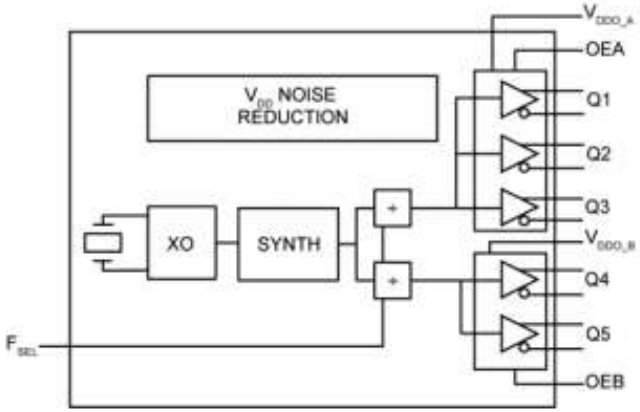

<< BACK

SM802XXX

Flexible Ultra-Low Jitter Clock Synthesizer

Online Datasheet

Features:

- 115fs at 156.25MHz (1.875MHz to 20MHz)
- 245fs at 156.25MHz (12kHz to 20MHz)
- On chip power supply regulation:
  - Excellent board level power supply noise – - immunity
- Generates up to 8 combinations of differential - - or 16 single-ended clock outputs.
- LVPECL, LVDS, HCSL, LVCMOS (SE or Diff)
- Selectable input:
  - Crystal: 11MHz to 30MHz
  - Reference input: 11MHz to 80MHz
- No external crystal oscillator capacitors required
- 2.5V or 3.3V operating power supply
- Industrial temperature range: -40°C to +85°C
- Available QFN packages:
  - 44-pin 7mm x 7mm
  - 32-pin 5mm x 5mm
  - 24-pin 4mm x 4mm
  - 16-pin 3mm x 3.5mm

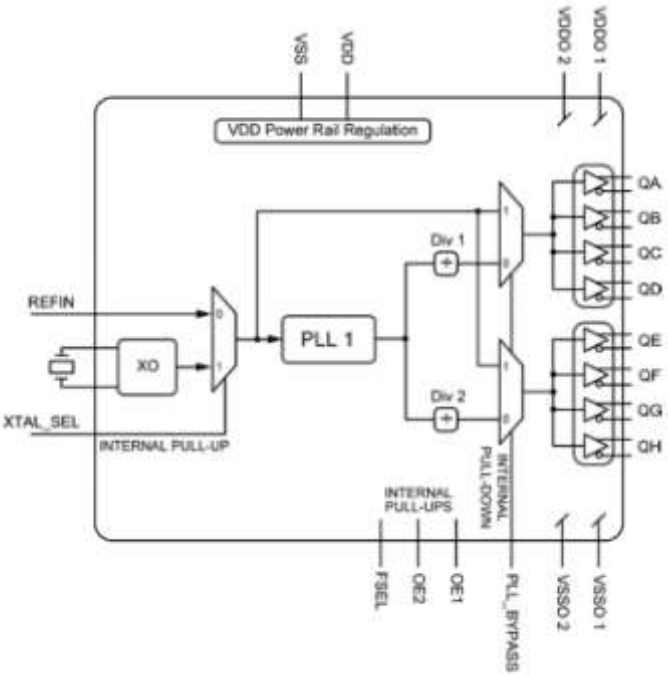

<< BACK

SM803XXX

Flexible Ultra-Low Jitter Clock Synthesizer

Online Datasheet

Features:

- Generates up to 12 differential or single-ended frequencies:
  - 75fs phase jitter @ 156.25MHz (1.875MHz to 20MHz)
  - 180fs phase jitter @ 156.25MHz (12KHz to 20MHz)
- Two PLL synthesizers to generate multiple frequencies
- Independently programmable output logic and frequency
- Output logic: LVPECL, LVDS, HCSL, LVCMOS
- Selectable input:
  - Crystal: 12MHz to 50MHz
  - Reference Input: 12MHz to 850MHz
- No external crystal oscillator capacitors required
- 3.3V or 2.5V operating power supply
- Separate output power supplies:
  - Each bank can be at different levels
- Feedback input pins for use as zero delay buffer
- On chip power supply regulation for excellent power supply noise immunity
- Temperature Range:
  - Commercial 0°C to +70°C
  - Industrial -40°C to +85°C
- Available in 84-pin 7mm × 7mm QFN package

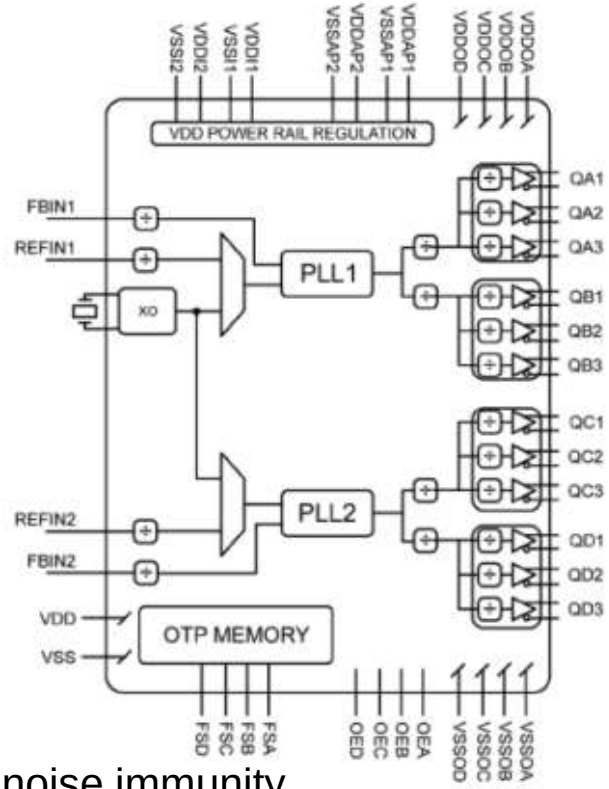

<< BACK

SM813XXX

Flexible Ultra-Low Jitter Clock Synthesizer

Online Datasheet

Features:

- Generates up to 18 differential or single-ended frequencies:
  - <65fs phase jitter @ 156.25MHz (1.875MHz to 20MHz)
  - <115fs phase jitter @ 156.25MHz (12KHz to 20MHz)
- Two PLL synthesizers to generate multiple frequencies
- Independently programmable output logic and frequency
- Output logic: LVPECL, LVDS, HCSL, LVCMOS
- Selectable input:
  - Crystal: 31.25MHz to 156.25MHz
- No external crystal oscillator capacitors required
- 3.3V or 2.5V operating power supply
- Separate output power supplies:
  - Each bank can be at different levels (4 banks of 2 –
    - outputs each)
- On chip power supply regulation for excellent power supply noise immunity
- Supports Commercial or Industrial temperature ranges
- Temperature Range:
  - Commercial 0°C to +70°C
  - Industrial -40°C to +85°C
- Available in 48-pin 7mm × 7mm QFN package

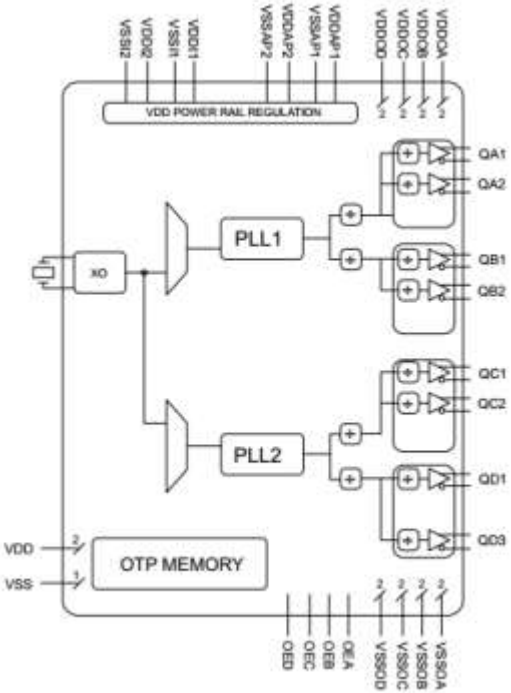

<< BACK

DSC2XXX

Low-Jitter Configurable Dual LVDS Oscillator

Online Datasheet

Features:

- Low RMS Phase Jitter: 1.5 ps (typ.)
- High Stability: ±10, ±25, ±50 ppm
- Wide Temperature Range: -20°C to 105°C
- High Supply Noise Rejection: -50dBc
- Two configurable independent outputs:
  - LVCMOS, LVPECL, LVDS, HCSL
- Pin-Selectable Configurations:
  - 3-bit Output Frequency Combinations
- Wide Freq. Range: 2.3 to 460MHz
- Miniature Footprint of 3.2mm x 2.5mm
- Excellent Shock & Vibration Immunity
  - Qualified to MIL-STD-883
- High Reliability
  - 20x better MTF than quartz oscillators
- Supply Range of 2.25V to 3.6V

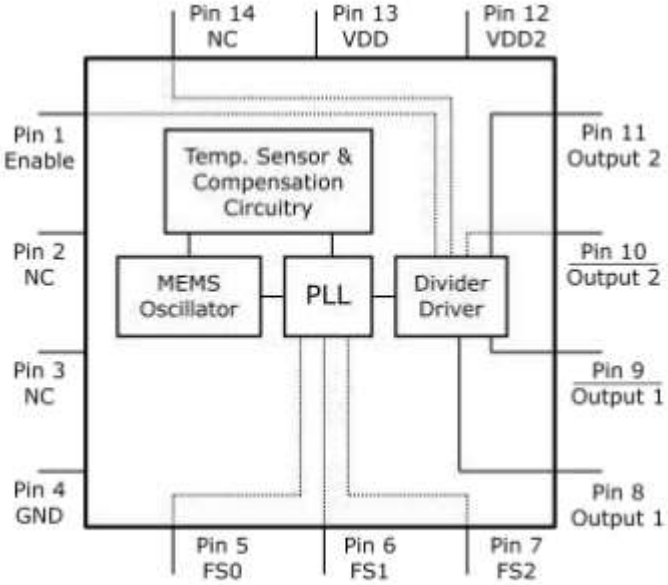

<< BACK

DSC2311

Crystal-less™ Configurable Two-Output Clock Generator

Online Datasheet

Features:

- Two Simultaneous CMOS Outputs:
  - Output 1 Range: 2.3 to 170MHz
  - Output 2 Range: 2.3 to 170MHz
- Low RMS Phase Jitter: <1 ps (typ.)
- High Stability: ±25 ppm; ±50 ppm
- Wide Temperature Range:
  - Automotive: -55°C to 125°C
  - Ext. Industrial: -40°C to 105°C
  - Industrial: -40°C to 85°C
  - Ext. Commercial: -20°C to 70°C
- High Supply Noise Rejection: -50dBc
- High Shock & Vibration Immunity:
  - Qualified to MIL-STD-883
- High Reliability:
  - 20x better MTF than crystal-based clock generator designs
- Supply Range of 2.25V to 3.6V

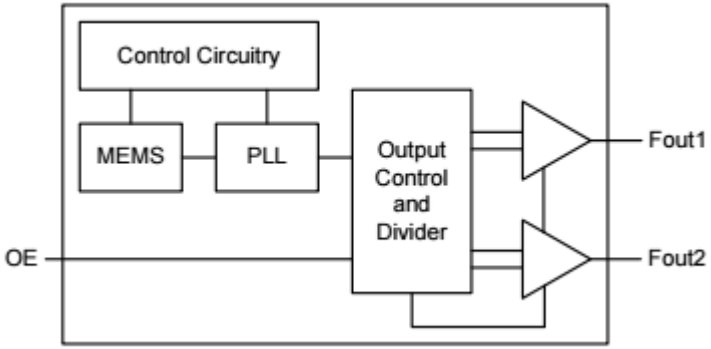

<< BACK

DSC400

Configurable Four Output, Low Jitter Crystal-less™ Clock Generator

Online Datasheet

Features:

- Low RMS Phase Jitter: <1ps (typ.)
- High Stability: ±25ppm, ±50ppm
- Wide Temperature Range:
  - Ext. commercial: -20°C to +70°C
  - Industrial: -40°C to +85°C
- High Supply Noise Rejection: -50dBc
- Wide frequency range: 2.3MHz to 460MHz
- 20-pin QFN footprint (5.0mm x 3.2mm)
- Excellent shock and vibration immunity:
  - Qualified to MIL-STD-883
- Four format-configurable outputs:
  - LVPECL, LVDS, HCSL, LVCMOS
- Available pin-selectable frequency table:
  - 1 pin per bank for two frequency sets
- High Reliability: 20x better MTF than quartz-based devices
- Wide supply range of 2.25V to 3.6V
- AEC-Q100 Automotive qualified

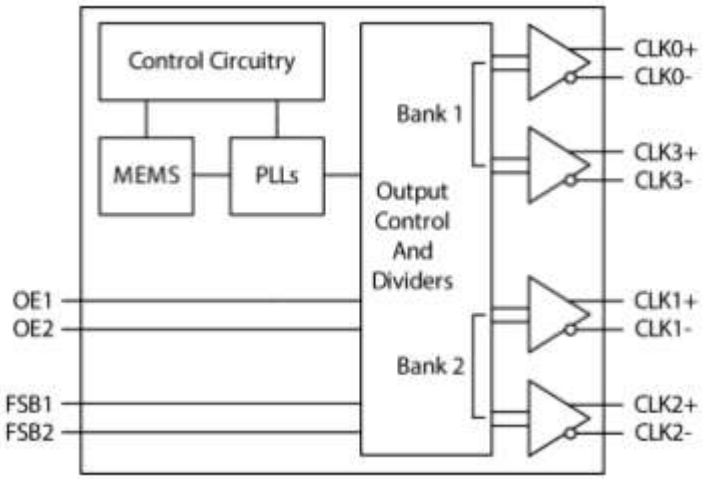

<< BACK

PL602-03

Low Cost, High Performance & Low Phase Noise XO

Online Datasheet

Features:

- Low phase noise XO output for the 48MHz to
- 100MHz range (-130 dBc at 10kHz offset).
- 12 to 25MHz crystal input
- Integrated crystal load capacitor:
- No external load capacitor required.
- Selectable High Drive (30mA) or
- Standard Drive (10mA) output.
- 3.3V operation
- Available in 8-Pin TSSOP or SOIC

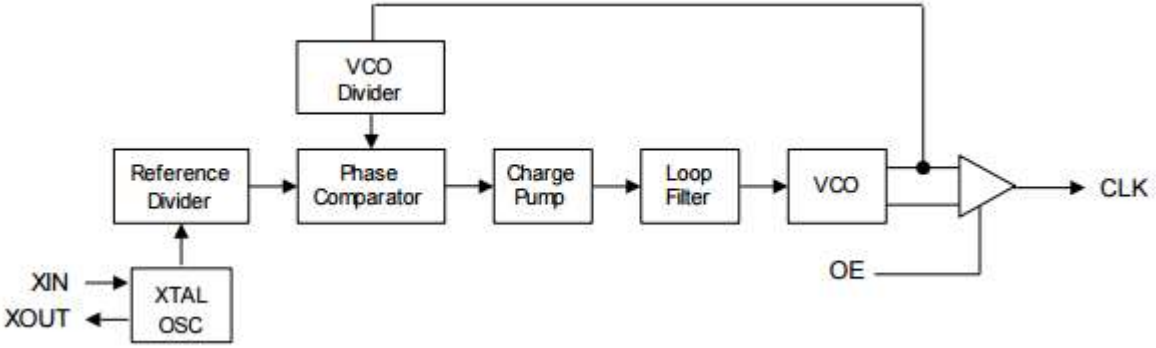

<< BACK

PL602-37/38/39

HCSL Compatible Clock Generator for PCI Express

Online Datasheet

Features:

- Selectable 750kHz to 800MHz range
- Low phase noise output:
  - -127dBc/Hz for 155.52MHz @ 10kHz offset
  - -115dBc/Hz for 622.08MHz @ 10kHz offset
- LVCMOS (PL602-37), LVPECL (PL602-35 and -- PL602-38) or LVDS (PL602-39) output
- 12MHz to 25MHz crystal input
- No external load capacitor or varicap required
- Output Enable selector
- Selectable /16 to x32 frequency divider/multiplier
- 3.3V operation
- Available in 16-Pin TSSOP, 16-pin 3mm x 3mm packages

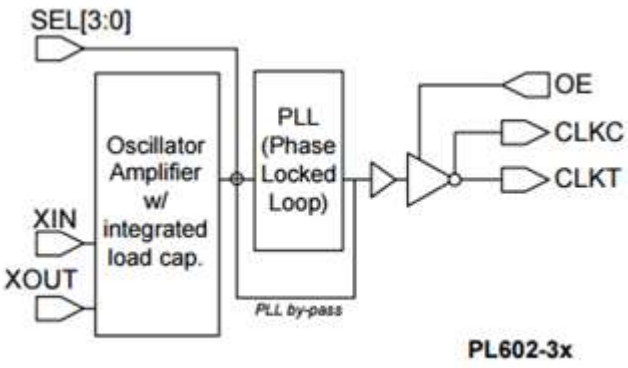

<< BACK

PL611-01

Programmable Clock™

Online Datasheet

Features:

- Advanced programmable PLL design
- Very low Jitter and Phase Noise:
  - 30-70ps Pk-Pk typical
- Up to 3 programmable outputs
- Output frequency up to 200MHz CMOS
- Accepts Crystal or reference clock inputs:
  - Fundamental crystal: 10MHz-30MHz
  - 3RD overtone crystal: Up to 75MHz
  - Reference input: Up to 200MHz
- Accepts <1.0V reference signal input –
  - voltage
- One programmable I/O pin can be configured as:
  - Programmable clock
  - Frequency Selection input
  - Output Enable (OE)
  - Power Down (PDB) input
- Supply operating range 2.25V to 3.63V
- Industrial temperature range: -40°C to +85°C
- Available in 8-pin MSOP/SOP, and 6-pin SOT packages

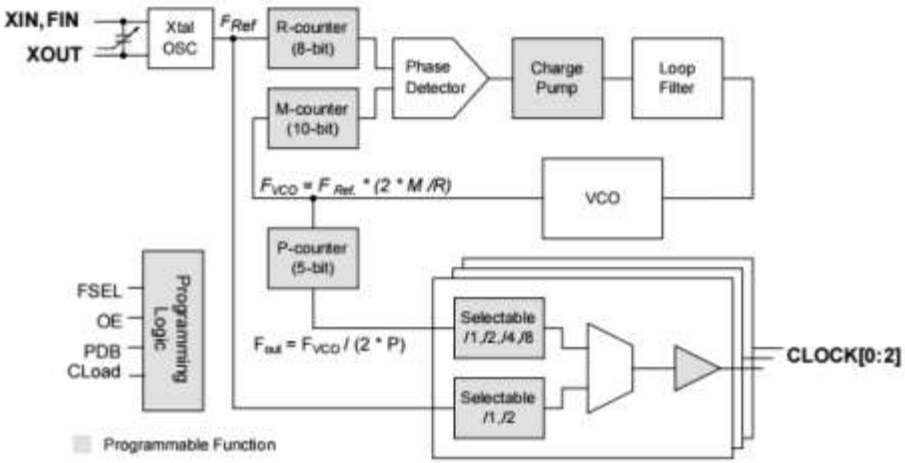

<< BACK

PL611-30

Low-Cost General Purpose Frequency Synthesizer

Online Datasheet

Features:

- Advanced programmable PLL design
- Very low Jitter and Phase Noise:
  - <40ps Pk-Pk typ.
- Supports complementary LVCMOS –
  - outputs to drive LVPECL & LVDS inputs
- Output Frequencies:
  - ≤400MHz at 3.3V
  - ≤350MHz at 2.5V
- Input Frequencies:
  - Fundamental crystal: 10MHz-30MHz
  - 3RD overtone crystal: Up to 75MHz
  - Reference Input: Up to 200MHz
- Accepts <1.0V reference signal input voltage
- One programmable I/O pin can be configured as:
  - Output Enable (OE) input
  - Frequency Selection (FSEL) input
  - Reference Clock (CLK2) output
- Single 2.5V or 3.3V ±10% power supply
- Industrial temperature range: -40°C to +85°C
- Available in 8-pin MSOP/SOP and 6-pin SOT-23 packages

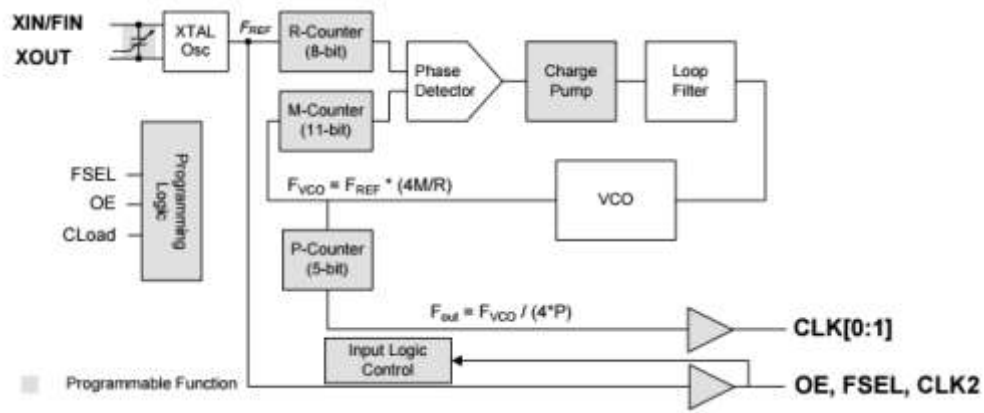

<< BACK

PL611-31

Low-Cost General Purpose Frequency Synthesizer

Online Datasheet

Features:

- Advanced programmable PLL design
- Very low Jitter and Phase Noise:
  - <40ps Pk-Pk typ.
- Up to 3 outputs
- Output Frequencies up to 200MHz CMOS:
  - Provides complementary LVCMOS -
    - outputs to drive LVSMOS, LVPECL, -
    - LVDS, HCSL or CML inputs
- Input Frequencies:
  - Fundamental crystal: 10MHz – 30MHz
  - Reference clock: 1MHz – 200MHz
- Accepts <1.0V reference signal input voltage
- One programmable I/O pin can be configured as:
  - Output Enable (OE) input
  - Frequency Selection (FSEL) input
  - Reference Clock (CLK2) output
- Single 2.5V or 3.3V ±10% power supply
- Industrial temperature range: -40°C to +85°C
- Available in 8-pin MSOP/SOP and 6-pin SOT-23 packages

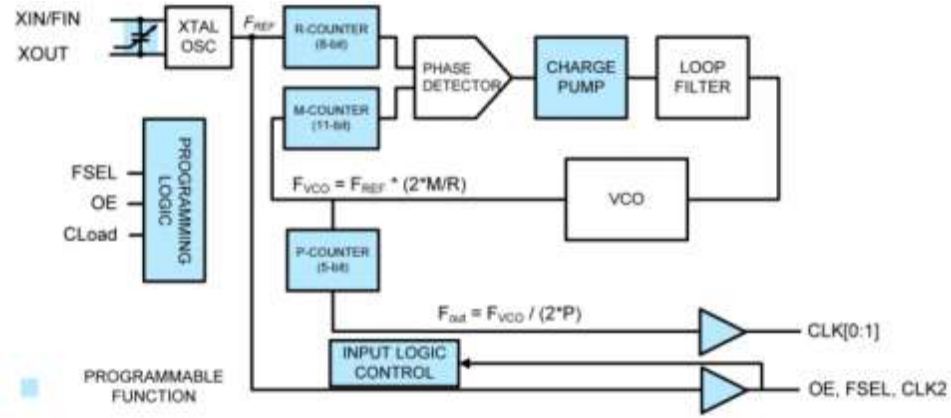

<< BACK

PL611-01

Low-Cost General Purpose Frequency Synthesizer

Online Datasheet

Features:

- Advanced programmable PLL design
- Very low Jitter and Phase Noise
  - 30-70ps Pk-Pk typical
- Up to 3 programmable outputs
- Output frequency up to 200MHz CMOS
- Accepts Crystal or reference clock inputs:
  - Fundamental crystal: 10MHz-30MHz
  - 3RD overtone crystal: Up to 75MHz
  - Reference input: Up to 200MHz
- Accepts <1.0V reference signal input –
  - voltage
- One programmable I/O pin can be configured as:
  - Programmable clock
  - Frequency Selection input
  - Output Enable (OE)
  - Power Down (PDB) input
- Supply operating range 2.25V to 3.63V
- Industrial temperature range: -40°C to +85°C
- Available in 8-pin MSOP/SOP, and 6-pin SOT packages

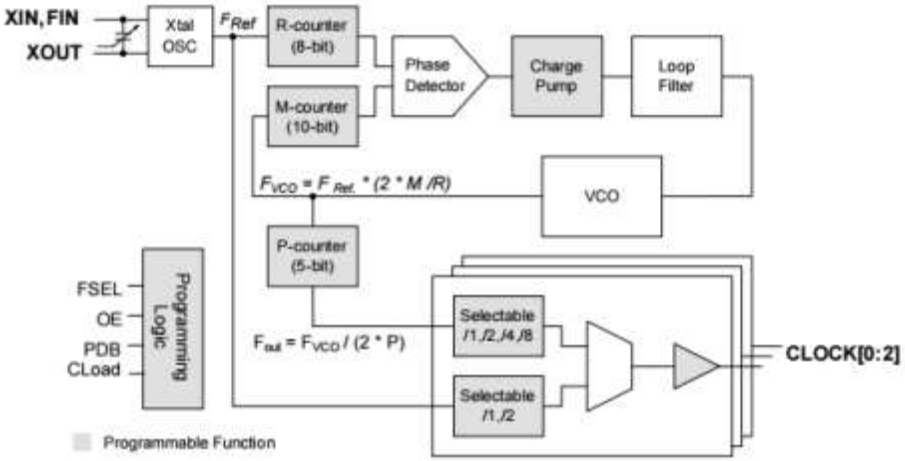

<< BACK

PL611-30

Low-Cost General Purpose Frequency Synthesizer

Online Datasheet

Features:

- Advanced programmable PLL design
- Very low Jitter and Phase Noise:
  - <40ps Pk-Pk typ.
- Supports complementary LVCMOS outputs to drive LVPECL and LVDS inputs
- Output Frequencies:
  - ≤400MHz at 3.3V
  - ≤350MHz at 2.5V
- Input Frequencies:
  - Fundamental crystal: 10MHz-30MHz
  - 3RD overtone crystal: Up to 75MHz
  - Reference Input: Up to 200MHz
- Accepts <1.0V reference signal input voltage
- One programmable I/O pin can be configured as:
  - Output Enable (OE) input
  - Frequency Selection (FSEL) input
  - Reference Clock (CLK2) output
- Single 2.5V or 3.3V ±10% power supply
- Industrial temperature range: -40°C to +85°C
- Available in 8-pin MSOP/SOP, and 6-pin SOT-23 packages

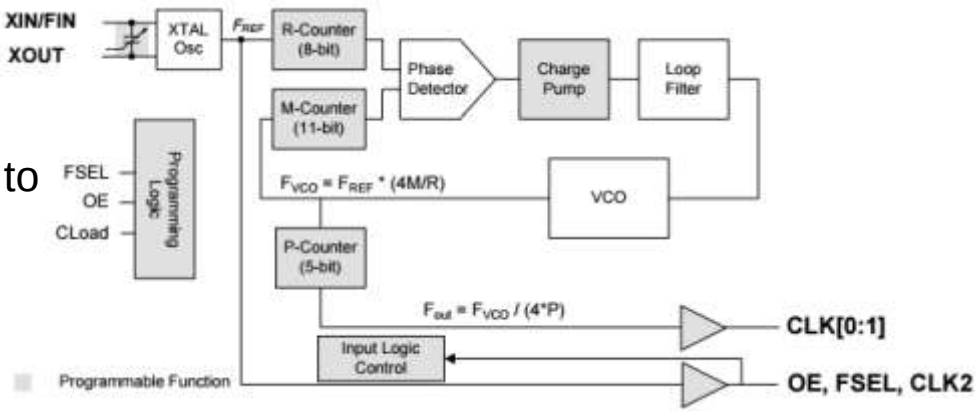

<< BACK

PL611s-02

1.8V-3.3V PicoPLL, World's Smallest Programmable Clock

Online Datasheet

Features:

- Advanced One Time Programmable PLL design
- Programmable PLL or Direct Oscillation operation
- Very low Jitter and Phase Noise:
  - 30-70ps Pk-Pk typ.
- Output Frequencies:
  - ≤110MHz at 1.8V
  - ≤166MHz at 2.5V
  - ≤200MHz at 3.3V
- Input Frequencies:
  - Fundamental crystal: 10MHz-30MHz
- Input Frequency: Fundamental crystal:
  - 10MHz-50MHz
- 8-bit Switch Capacitor for ±50ppm crystal CL tuning
- Low current consumption, <10µA when PDB is activated
- One programmable I/O pin can be configured as:
  - Output Enable (OE) input
  - Power Down (PDB) input
- Single 1.8V, 2.5V or 3.3V ±10% power supply
- Industrial temperature range: -40°C to +85°C
- Wire bond (-02) or Flip-Chip (-03) pad layout

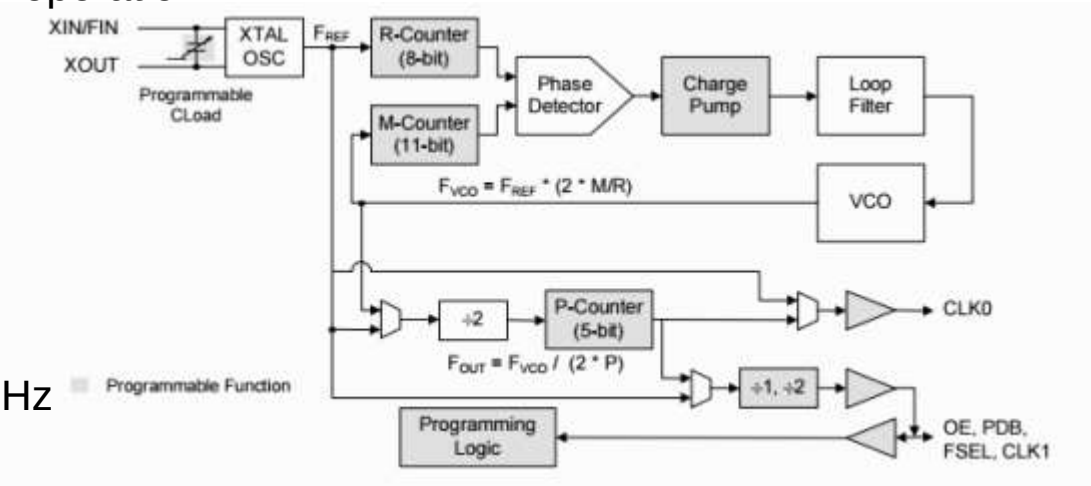

<< BACK

PL611s-18

0.5kHz to 125MHz, MHz-to-kHz Programmable Clock

Online Datasheet

Features:

- Designed for very low power applications
- Accepts crystal or reference clock inputs
- Input frequency:
  - Fundamental crystal: 10MHz to 50MHz
  - Reference input: 1MHz to 125MHz
- Accepts >0.1V reference signal input - - voltage
- Output frequency 0.5kHz to 125MHz CMOS:
  - 65MHz @ 1.8V operation
  - 90MHz @ 2.5V operation
  - 125MHz @ 3.3V operation
- One programmable I/O pin can be configured as:
  - OE, PDB, FSEL, or CLK1
- Low current consumption:
  - <1.0mA with 27MHz & 32kHz outputs
  - <5µA when PDB is activated
- Single 1.8V - 3.3V ±10% power supply
- Industrial temperature range: -40°C to +85°C
- Available in 6-pin DFN, and SOT-23 packages

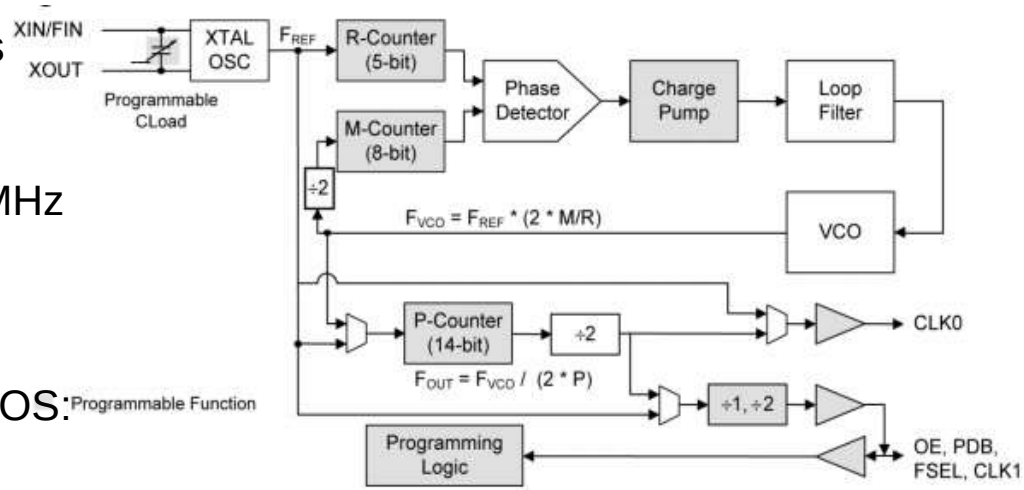

<< BACK

PL611s-19

0.5kHz-125MHz, MHz to KHz Programmable Clock™

Online Datasheet

Features:

- Designed for very low power applications
- Input Frequency, AC Coupled:
  - Reference input: 1MHz to 125MHz
  - Accepts >0.1V input signal voltage
- Output frequency up to 125MHz LVCMOS:
  - ≤65MHz @ 1.8V operation
  - ≤90MHz @ 2.5V operation
  - ≤125MHz @ 3.3V operation
- One programmable input pin can be configured as:
  - Power Down (PDB) input
  - Output Enable (OE)
  - Frequency Selection Switching input
- Disabled outputs Active Low
- Low current consumption:
  - <1.0mA with 27MHz & 32kHz outputs
  - <5µA when PDB is activated
- Single 1.8V - 3.3V ±10% power supply
- Industrial temperature range: -40°C to +85°C
- Available in 6-pin DFN, and SOT-23 packages

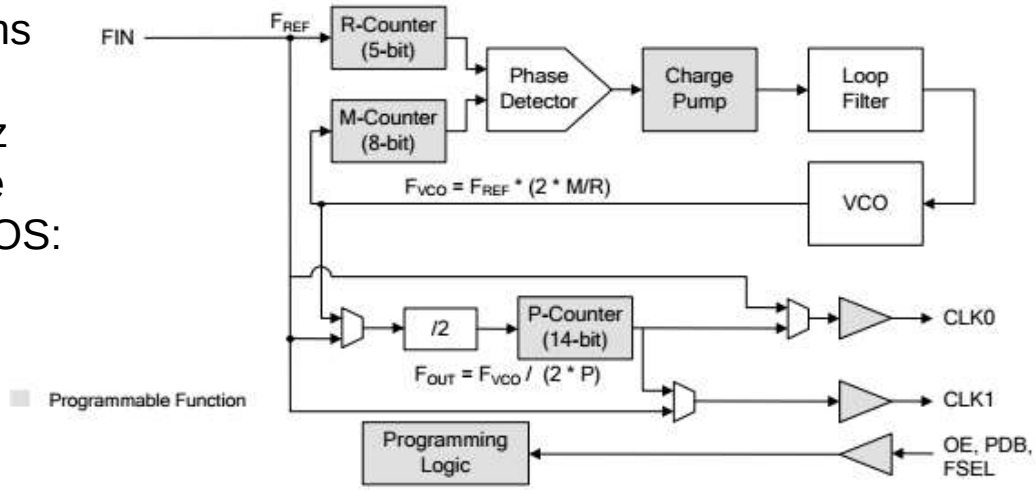

<< BACK

PL613-01

1.8V to 3.3V, PicoPLL, 3-PLL, 200 MHz, 8 Output Clock IC

Online Datasheet

Features:

- Designed for PCB space savings
- 3 low-power Programmable PLLs & Up to 8 clock outputs
- Low-Power Consumption: 10µA typ in PDB
- Output Frequency:
  - ≤110MHz @ 1.8V operation
  - ≤166MHz @ 2.5V operation
  - ≤200MHz @ 3.3V operation
- Input Frequency:
  - Fundamental Crystal: 10MHz to 40MHz
  - Reference Input: 10MHz to 200MHz
- Programmable I/O pins can be configured as:
  - Output Enable (OE), Configuration Switching (CSEL), Frequency Switching (FSELX), Power Down (PDB) inputs, or Clock Outputs
- Disabled outputs programmable as HiZ or Active Low
- Single 1.8V, 2.5V or 3.3V ±10% power supply
- Temperature range:
  - Commercial: 0°C to +70°C, Industrial: -40°C to +85°C
- Available in 3mm x 3mm QFN or TSSOP packages

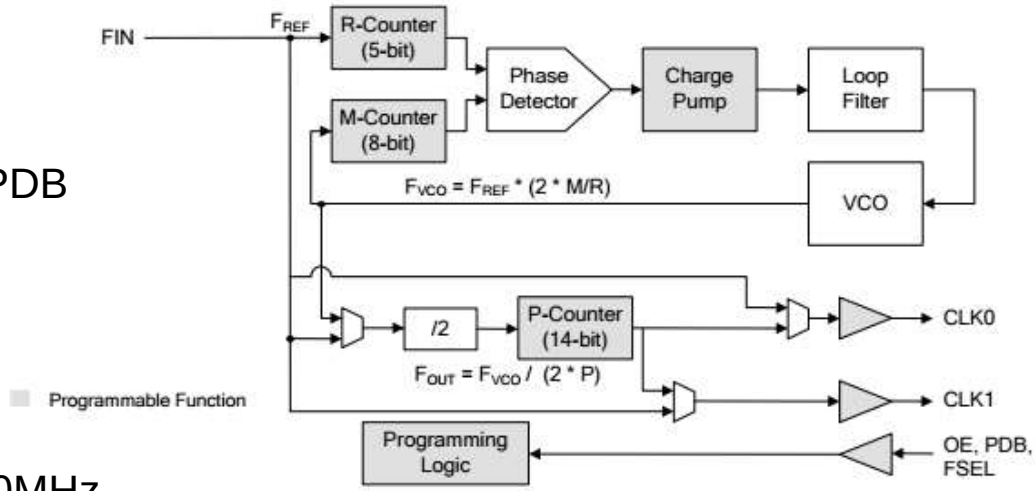

<< BACK

PL602-XX

HCSL Compatible Clock Generator for PCI Express

Online Datasheet

Features:

- Input Frequency:
- Fundamental Crystal or Reference Input: 25MHz
- Output Frequency:
  - PL602-21: 100MHz differential outputs
  - PL602-22: 125MHz differential outputs
  - PL602-23: 200MHz differential outputs
  - PL602-26: 25MHz differential outputs
  - PL602-27: 250MHz differential outputs
  - PL602-15: 156.25MHz differential outputs
- Very low Jitter: 28ps Pk-Pk typ
- Very low Phase Noise:
  - -130 dBc at 10kHz offset at 100MHz
- No external loop filter is required
- Power supply range: 2.25V to 3.63V
- Industrial temperature range: -40°C to 85°C
- 6-pin SOT and 8-pin SOP packages

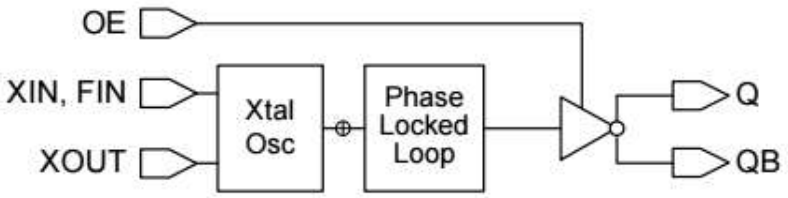

<< BACK

DSC557-03

Crystal-less Two Output PCIe Gen1/2/3 Clock Generator

Online Datasheet

Features:

- Meets PCIe Gen1, Gen2 & Gen3 specs.
- Available Output Formats:
  - HCSL, LVPECL, or LVDS
  - HCSL/LVPECL, HCSL/LVDS, LVPECL/LVDS
- Wide Temperature Range:
  - Ext. Industrial: -40°C to 105°C
  - Industrial: -40°C to 85°C
  - Ext. Commercial: -20°C to 70°C
- Excellent Shock & Vibration Immunity
  - Qualified to MIL-STD-883
- Low Power Consumption
  - 30% lower than competing devices
- Supply Range of 2.25V to 3.6V
- TSSOP and 14-Pin QFN packages

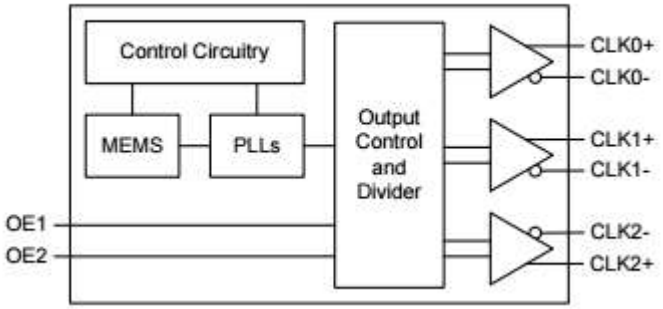

<< BACK

DSC557-04

Crystal-less™ Three Output PCIe Clock Generator

Online Datasheet

Features:

- Meets PCIe Gen1, Gen2 & Gen3 specs.
- Available Output Formats:
  - HCSL, LVPECL, or LVDS
  - Mixed Outputs: LVPECL/HCSL/LVDS
- Wide Temperature Range:
  - Ext. Industrial: -40°C to 105°C
  - Industrial: -40°C to 85°C
  - Ext. Commercial: -20°C to 70°C
- Excellent Shock & Vibration Immunity:
  - Qualified to MIL-STD-883
- Low Power Consumption:
  - 30% lower than competing devices
- Supply Range of 2.25V to 3.6V
- Available in 20-Pin QFN package

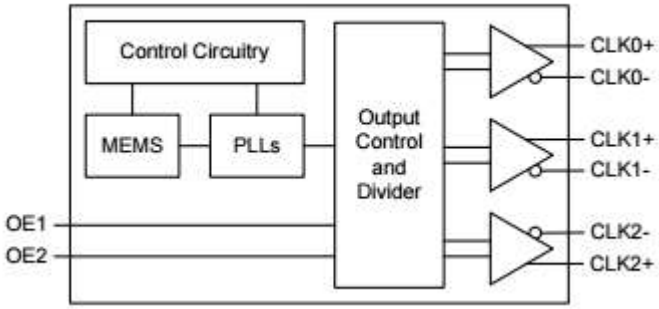

<< BACK

DSC557-05

Crystal-less™ Four Output PCIe Clock Generator

Online Datasheet

Features:

- Meets PCIe Gen1, Gen2 & Gen3 specs.
- Available Output Formats:
  - HCSL, LVPECL, or LVDS
  - Mixed Outputs: LVPECL/HCSL/LVDS
- Wide Temperature Range:
  - Ext. Industrial: -40°C to 105°C
  - Industrial: -40°C to 85°C
  - Ext. Commercial: -20°C to 70°C
- Excellent Shock & Vibration Immunity:
  - Qualified to MIL-STD-883
- Low Power Consumption:
  - 30% lower than competing devices
- Supply Range of 2.25V to 3.6V
- Available in 20-Pin QFN package

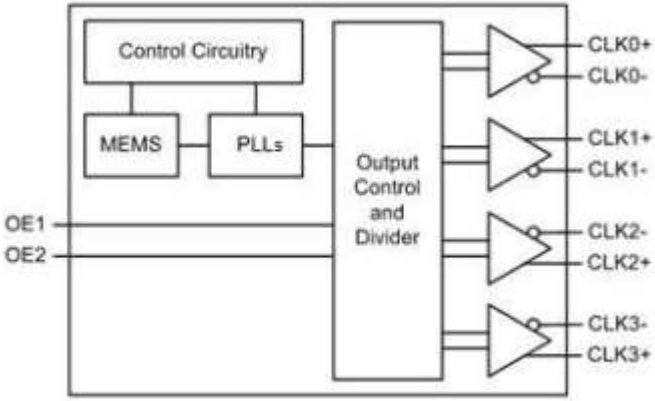

<< BACK

PL602031/2/3/4

HCSL-Compatible Clock Generator for PCI Express

Online Datasheet

Features:

- Input frequency:
  - Fundamental crystal or reference input - 25MHz
- Output frequency:
  - PL602031: 2 x 25MHz differential outputs
  - PL602032: 2 x 100MHz differential outputs
  - PL602033: 2 x 125MHz differential outputs
  - PL602034: 2 x 200MHz differential outputs
- Very low jitter: 28ps peak-to-peak typical
- Very low phase noise: -130dBc at 10kHz offset at 100MHz
- Compliant with PCI-Express Gen1 and Gen2
- Industrial temperature range: -40°C to +85°C
- Power supply range: 2.25V to 3.63V
- Available in 16-pin QFN package

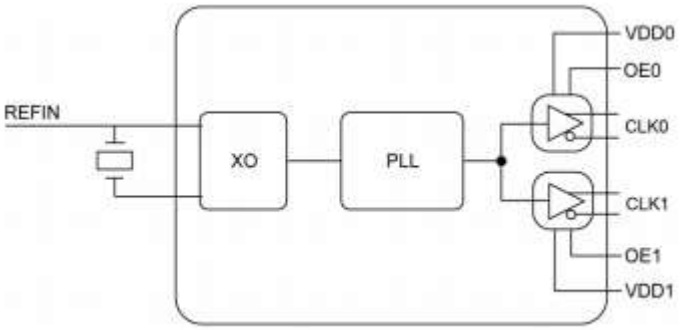

<< BACK

PL602041

ClockWorks™ PCIe Quad, Ultra-Low Jitter, HCSL Frequency Synthesizer

Online Datasheet

Features:

- Input crystal frequency of 25MHz
- Generates four HCSL clock outputs:
  - 25MHz, 100MHz, 125MHz, and 200MHz
- 2.5V or 3.3V operating range
- Typical phase jitter @ 100MHz (1.875MHz to 20MHz): 105fs
- Compliant with PCI Express Gen1, Gen2, and Gen 3
- Industrial temperature range: -40°C to +85°C
- Available in 24-pin 4mm x 4mm QFN package

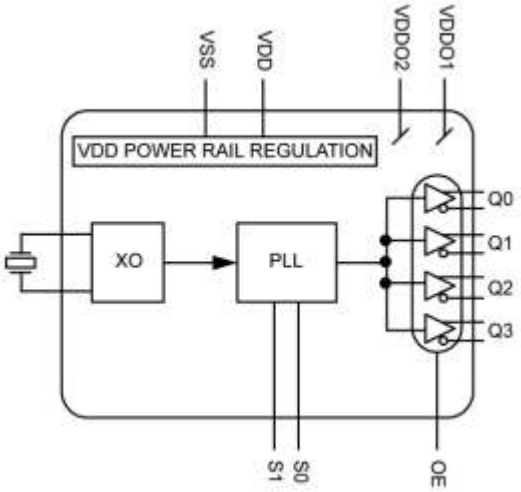

<< BACK

PL607041

ClockWorks™ PCIe Quad, Ultra-Low Jitter, HCSL Frequency Synthesizer

Online Datasheet

Features:

- 25MHz fundamental crystal or reference input
- Generates four HCSL clock outputs:
  - 25MHz, 100MHz, 125MHz, and 200MHz
- Spread spectrum for EMI reduction
- 2.5V or 3.3V operating range
- Typical phase jitter @ 100MHz (1.5MHz to 10MHz): 320fs
- Industrial temperature range: -40°C to +85°C
- Available in 24-pin 4mm x 4mm QFN package

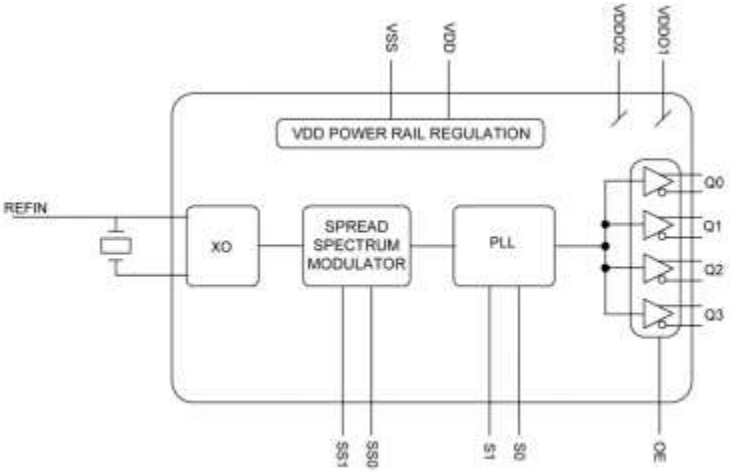

<< BACK

PL602081/2

PCIe Octal, Ultra-Low Jitter, HCSL Frequency Synthesizer

Online Datasheet

Features:

- Generates eight HCSL clock outputs
- PL602081 output frequencies: 25MHz, 100MHz, or 200MHz
- PL602082 output frequencies: 25MHz, 125MHz, or 250MHz
- 2.5V or 3.3V operating range
- Typical phase jitter: 250fs for 12kHz to 20MHz
- Industrial temperature range: -40°C to +85°C
- Available in 44-pin 7mm x 7mm QFN package

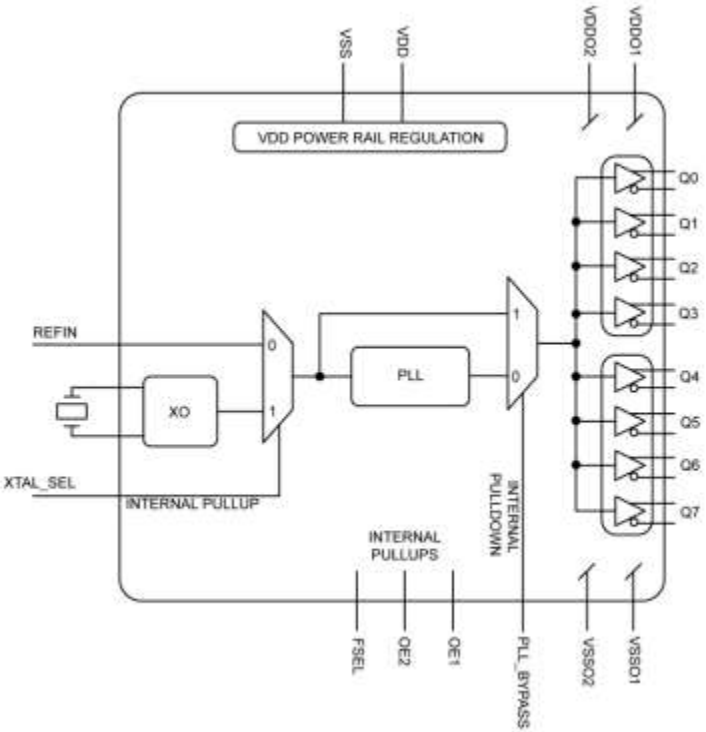

<< BACK

PL607081/2

PCIe Octal, Ultra-Low Jitter, HCSL Frequency Synthesizer

Online Datasheet

Features:

- Generates eight HCSL clock outputs
- PL607081 output frequencies: 25MHz, 100MHz, or 200MHz
- PL607082 output frequencies: 25MHz, 125MHz, or 250MHz
- Spread spectrum for EMI reduction
- 2.5V or 3.3V operating range
- Typical phase jitter @ 100MHz: 320fs for 1.5MHz to 10MHz
- Industrial temperature range: -40°C to +85°C
- Available in 44-pin 7mm x 7mm QFN package

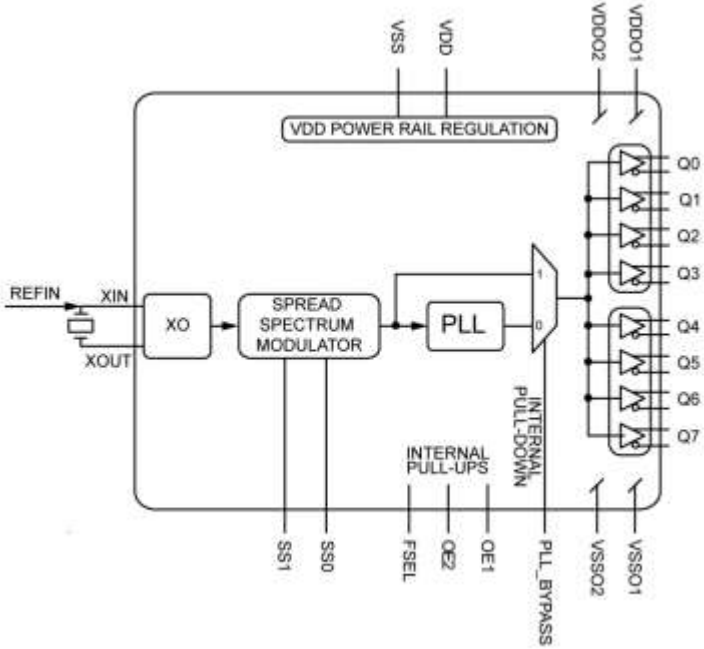

<< BACK

PL671-01

PicoEMI™ Programmable Spread Spectrum Clock

Online Datasheet

Features:

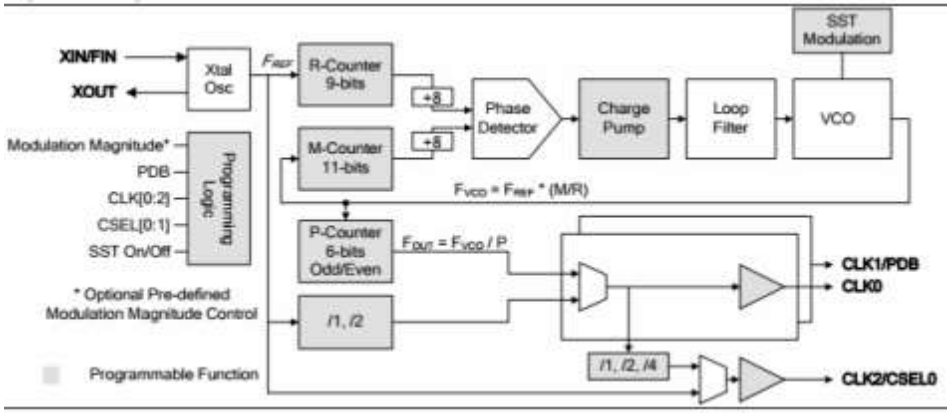

- Advanced programmable PLL with Spread -- Spectrum
- Crystal or Reference Clock input:
  - Fundamental crystal: 10MHz to 40MHz
  - Reference input: 1MHz to 200MHz
- Accepts ≥0.1V reference signal input voltage
- Up to 3 programmable outputs
- Low Cycle to Cycle jitter
- Single 2.5V or 3.3V ±10% power supply
- Programmable Spread Spectrum Modulation Magnitude:
- Center Spread: ±0.125% to ±2.0% in ±0.125% steps:
  - Down Spread: -0.25% to -4.0% in 0.25% steps
  - Spread Spectrum On/Off selection
- Programmable output drive (4mA, 8mA, 16mA)
- Industrial temperature range: -40°C to +85°C
- Output frequency range:
  - Up to 166MHz @ 2.5V
  - Up to 200MHz @ 3.3V
- 8-pin SOP, MSOP and 6-pin SOT packaging

<< BACK

PL671-02

PicoEMI™ Programmable Spread Spectrum Clock Generator

Online Datasheet

Features:

- Advanced programmable PLL with Spread Spectrum
- Reference Clock input:
  - 1MHz to 200MHz
- Output Frequency:
  - ≤200MHz
- Two programmable I/O pins:
  - PDB for Power Down function
  - CSEL for Configuration Select
  - CLK1/CLK2 additional clock outputs
- Programmable output drive
- Low Cycle to Cycle jitter
- Single 2.5V or 3.3V ±10% power supply
- 6-pin SOT23 and Thin SOT (TSOT) packaging

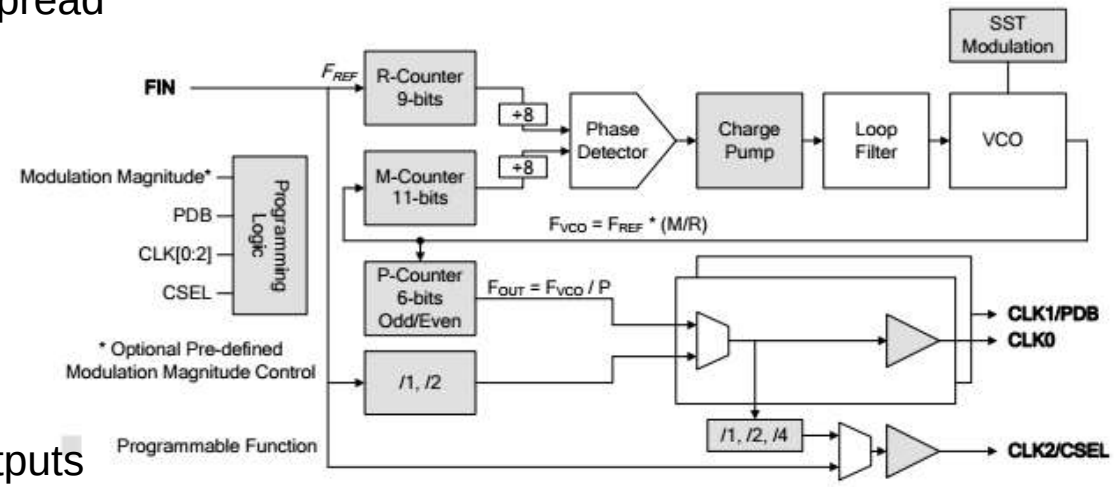

<< BACK

PL902

JitterBlocker™

Online Datasheet

Features:

- Lowest power, smallest programmable jitter attenuator
- Input/output frequency up to 200MHz
- I/O pins can be configured as:
  - Output enable (OE)
  - Frequency switching (CSEL)
  - Power down (PDB) input
  - CLK1(2) output
- <10µA current consumption with PDB active
- Industrial temperature range: –40°C to +85°C
- Available in 6-pin SOT-23 package
- Related devices:
  - PL903xxx: Single-ended input, differential -- output, and phase noise cleaning
  - PL904xxx: Differential input, two differential outputs, and phase noise cleaning

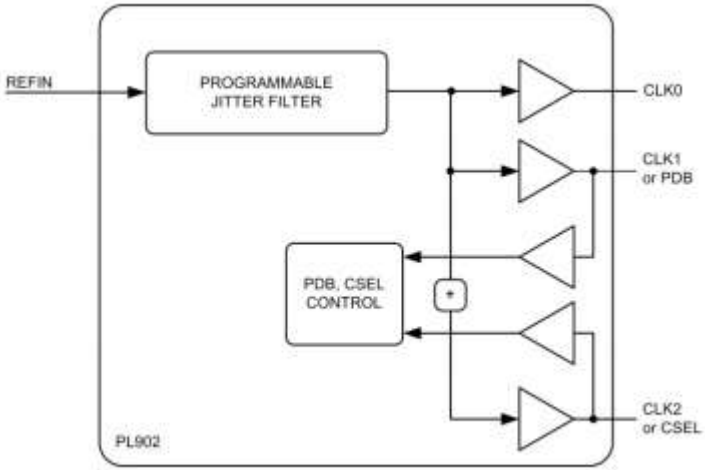

<< BACK

PL903

JitterBlocker™

Online Datasheet

Features:

- Lowest-power, smallest programmable jitter attenuator
- Input frequency up to 200MHz
- Output frequency up to 840MHz
- Jitter attenuation 20dB at 3MHz spur frequency
- Additive phase jitter or phase jitter floor:
    - 55fs for 1.875MHz to 20MHz
    - 251fs for 12kHz to 20MHz
- Single ended CMOS input
- One differential or two single ended outputs
- Output logic types supported:
    - LVPECL, LVDS, HCSL and LVCMOS (single – - ended or differential).
- Industrial temperature range from –40°C to +85°C
- Available in 24-pin QFN package
- Related devices:
    - PL902xxx: LVCMOS, period jitter cleaning
    - PL904xxx: Differential input, two differential – - outputs, and phase noise cleaning

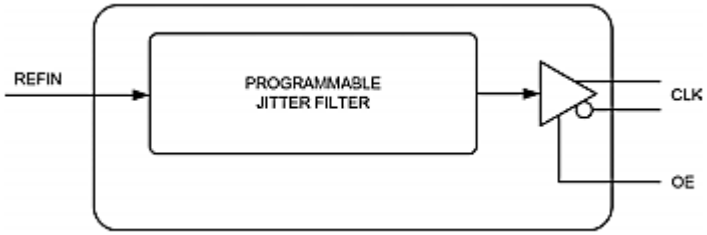

<< BACK

PL904

JitterBlocker™

Online Datasheet

Features:

- Input frequency up to 200MHz
- Output frequency up to 850MHz
- Programmable input type, differential or single-ended
- Up to two outputs supporting:
  - LVPECL, LVDS, HCSL, or LVCMOS logic types
- Output enable control for each output
- Jitter attenuation of 20db at 3MHz spur frequency
- Cleans up spurs to below 0.5psRMS phase jitter
- Industrial temperature range: -40°C to +85°C
- Available in 32-pin QFN package
- Related devices:
  - PL902xxx: LVCMOS, period jitter cleaning
  - PL903xxx: Single-ended input, one differential output, phase noise cleaning

<< BACK

SY87729L

3.3V AnyClock® Fractional N Synthesizer

Online Datasheet

Features:

- Fractional synthesizer from 10MHz to 365MHz -
  - from a single 27MHz reference oscillator
- Generates exactly the correct frequency for -
  - common transport protocols with or without FEC
- Directly enables SY87721L to lock onto any data –
  - rate within its range
- Exceeds BellCore and ITU jitter generation specifications
- Programmable via MicroWire™ interface
- Available in 32-Pin EPAD-TQFP package

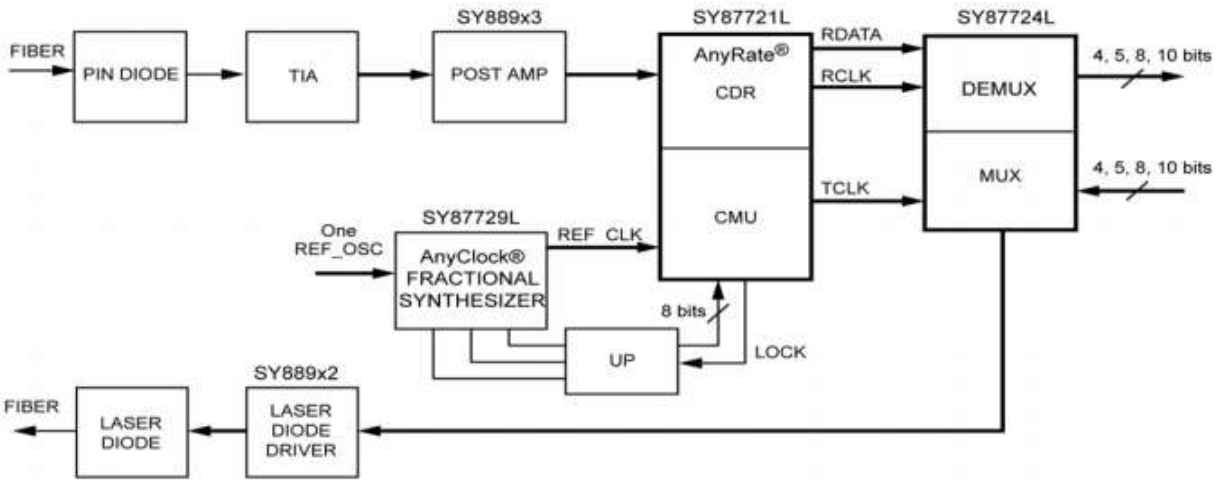

<< BACK

SY87739L

Protocol Transparent Fractional-N Synthesizer

Online Datasheet

Features:

- Protocol transparent fractional-N synthesizer
- 10MHz to 729MHz from a single 27MHz –
  - reference oscillator
- Generates exactly the correct frequency for –
  - common transport protocols with or without FEC
- Directly enables SY87721L CDR to lock onto any -
  - data rate within its range
- Exceeds BellCore and ITU jitter generation –
  - specifications
- Programmable via MicroWire™ interface
- Available in 32-Pin ePad-TQFP package

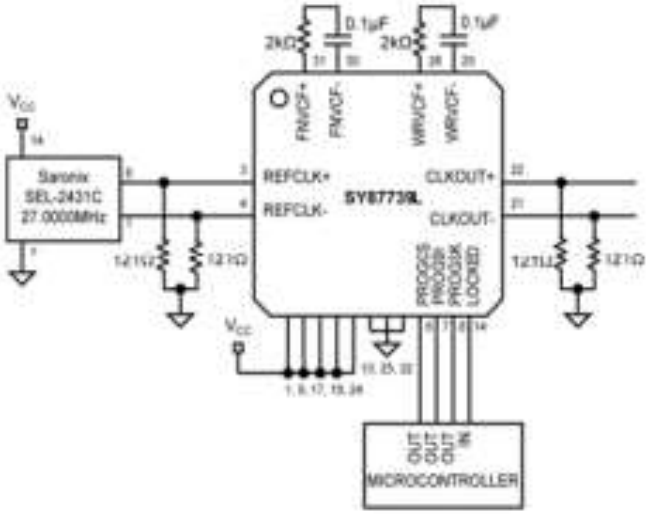

<< BACK

SY89537L

LVPECL & LVDS Programmable Clock Synthesizer & Fanout Buffer

Online Datasheet

Features:

- Integrated programmable synthesizer with multiple -
  - output dividers, fanout buffers, and clock drivers
- Direct interface to crystal: 14MHz to 18MHz Input MUX:
  - Ideal for reference backup clock source or –
    - system test frequency source
  - Input MUX isolates XTAL and minimizes crosstalk
- Guaranteed AC performance:
  - 87.15MHz to 700MHz output range (with RFCK at 16.6MHz)
  - <100psPP total jitter
  - <7psRMS cycle-to-cycle jitter
  - <8psPP deterministic jitter
  - <0.7psRMS crosstalk induced jitter
  - <50ps bank-to-bank skew
- LVPECL and LVDS outputs, TTL/CMOS compatible control logic
- Five independently programmable output frequency banks:
  - Four differential LVPECL output banks
  - One differential LVDS output bank with 3 output pairs
- 3.3V ±10% power supply (2.5V output capable)
- Industrial temperature range: -40°C to +85°C
- Available in 44-pin (7mm x 7mm) MLF® package

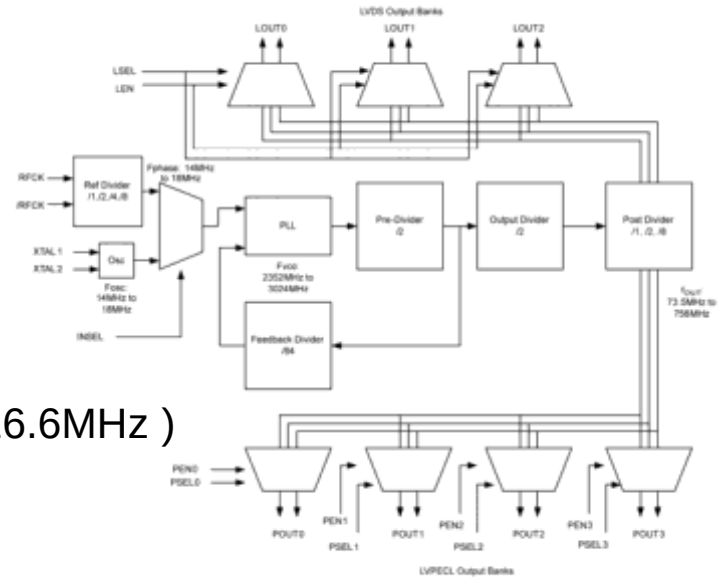

<< BACK

PL133-27

Low-Power, 1.62V to 3.63V, 1MHz to 150MHz, 1:2 Fanout Buffer IC

Online Datasheet

Features:

- 2 LVCMOS Outputs
- Input/Output Frequency: 1MHz to 150MHz
- Supports LVCMOS or Sine Wave Input Clock
- Extremely low additive Jitter
- 8mA Output Drive Strength
- Low Current Consumption
- Single 1.8V, 2.5V or 3.3V ±10% operation
- Operating Temperature Range:
    - Commercial: 0°C to 70°C
    - Industrial: -40°C to 85°C
- Available in DFN-6L Packages

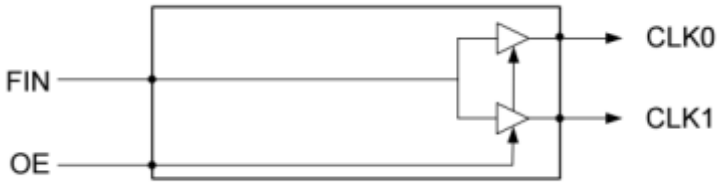

<< BACK

PL135-27

Low Power, 1.62V to 3.63V, 10MHz to 40MHz, 1:2 Oscillator Fanout Buffer

Online Datasheet

Features:

- Advanced oscillator design for wide frequency coverage
- Two LVCMOS Outputs
- 8mA Output Drive Strength
- Input/Output Frequency: 10MHz to 40MHz fundamental crystal
- Very low jitter and phase noise
- Low current consumption
- Single 1.62V to 3.63V power supply
- Available in 2.0mm x 13.mm DFN-6 package

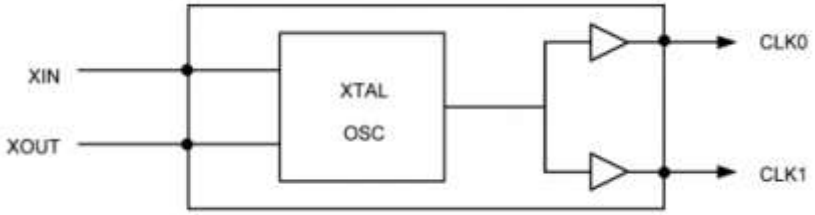

<< BACK

SY100EL11V

5V/3.3V 1:2 Differential Fanout Buffer

Online Datasheet

Features:

- 3.3V and 5V power supply options
- 265ps propagation delay
- 5ps skew between outputs
- High bandwidth output transitions
- Internal 75kΩ input pull-down resistors
- Replaces SY10/100EL11
- Improved output waveform characteristics
- Available in 8-pin SOIC package

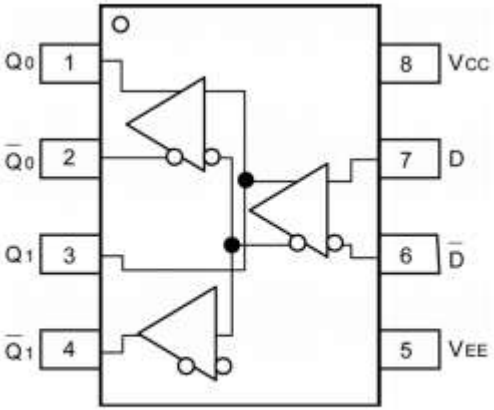

8-Pin SOIC (Z8-1)

<< BACK

SY100EP11U

2.5V/3.3V/5V 1:2 Differential PECL/LVPEC/ECL Fanout Buffer

Online Datasheet

Features:

- 2.5V, 3.3V, and 5V power supply options
- Guaranteed AC parameters over temperature:
  - fMAX = >3GHz
  - <20ps output-to-output skew
  - <200ps tr/tf
  - <300ps propagation delay
- Industrial temperature range: -40°C to +85°C
- Available in 8-Pin MSOP and SOIC packages

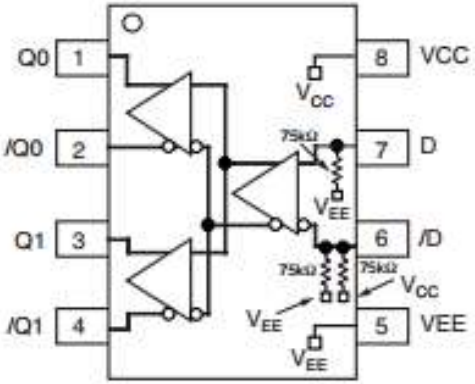

8-pin MSOP and SOIC Packages

<< BACK

SY10EP11U

2.5V/3.3V/5V 1:2 Differential PECL/LVPEC/ECL Fanout Buffer

Online Datasheet

Features:

- 2.5V, 3.3V, and 5V power supply options
- Guaranteed AC parameters over temperature:
  - fMAX = >3GHz
  - <20ps output-to-output skew
  - <200ps tr/tf
  - <300ps propagation delay
- Industrial temperature range: -40°C to +85°C
- Available in 8-Pin MSOP and SOIC packages

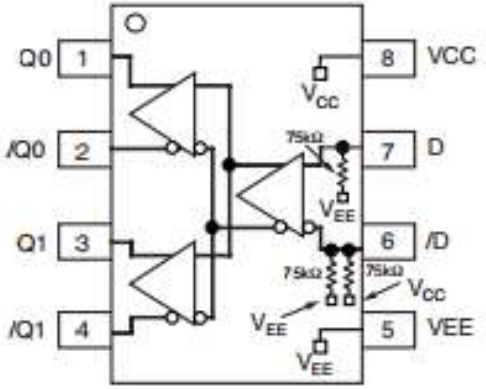

8-pin MSOP and SOIC Packages

<< BACK

SY54011

Low Voltage 1.2V/1.8V CML 1:2 Fanout Buffer, 3.2Gbps, 3.2 GHz

Online Datasheet

Features:

- 1.2V/1.8V/2.5V CML 1:2 Fanout Buffer
- Guaranteed AC performance over temperature –
  - and voltage:
    - DC-to >3.2Gbps throughput
    - <300ps propagation delay (IN-to-Q)
    - <15ps within-device skew
    - <95ps rise/fall times
- Ultra-low jitter design:
    - <50fsRMS typical additive phase jitter
- High-speed CML outputs
- 2.5V ±5% VCC, 1.2/1.8V/2.5V ±5% -
  - VCCO power supply operation
- Industrial temperature range: -40°C to +85°C
- Available in 16-pin (3mm x 3mm) MLF package

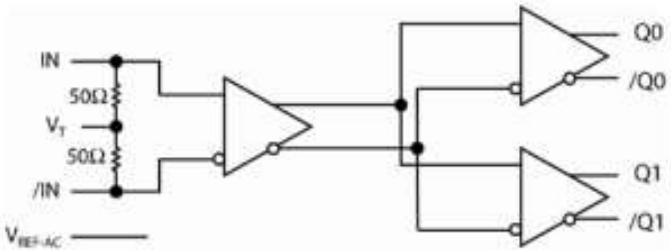

<< BACK

SY56011R

Low Voltage 1:2 Fanout Buffer with Equalization

Online Datasheet

Features:

- 1.2V/1.8V/2.5V CML 1:2 Fanout Buffer
- Equalizes 9, 18, 27 inches of FR4
- Guaranteed AC performance over temperature –
  - and voltage:
    - DC-to >6.4Gbps Data throughput
    - DC-to >4.5GHz Clock throughput
    - <280ps propagation delay (IN-to-Q)
    - <15ps within-device skew
- <80ps rise/fall times
- Ultra-low jitter design:
    - <1psRMS random jitter
- High-speed CML outputs
- 2.5V ±5% VCC, 1.2/1.8V/2.5V ±5% VCCO power supply operation
- Industrial temperature range: -40°C to +85°C
- Available in 16-pin (3mm x 3mm) QFN package

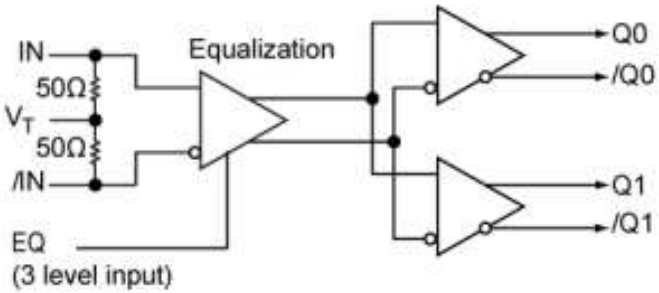

<< BACK

SY58011U

7GHz, 1:2 CML Fanout Buffer/Translator

Online Datasheet

Features:

- Precision 1:2, 400mV CML fanout buffer
- Guaranteed AC performance over –
  - temperature/voltage:
    - >7GHz fMAX clock
    - <60ps tr/tf times
    - <250ps tpd
    - <15ps max. skew
- Low jitter performance:
    - <10psPP total jitter (clock)
- <1psRMS random jitter (data):
    - <10psPP deterministic jitter (data)
- Accepts an input signal as low as 100mV
- Unique input termination and VT pin accepts DC coupled and –
  - AC-coupled differential inputs: LVPECL, LVDS, and CML
- 50Ω source terminated CML outputs
- Power supply 2.5V ±5% and 3.3V ±10%
- Industrial temperature range: -40°C to +85°C
- Available in 16-pin (3mm x 3mm) MLF® package

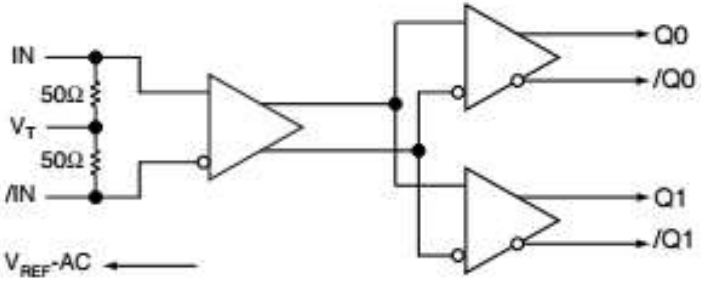

<< BACK

SY58012U

5GHz, 1:2 LVPECL Fanout Buffer/Translator

Online Datasheet

Features:

- Precision 1:2, 800mV LVPECL fanout buffer
- Guaranteed AC performance over –
  - temperature/ voltage:
- >5GHz fMAX (clock)
- <110ps tr/tf times
- <260ps tpd
- <15ps max skew
- Low jitter performance
- 60fs RMS phase jitter
- Accepts an input signal as low as 100mV
- Unique input termination and VT pin accepts DC and -
  - AC-coupled differential inputs: LVPECL, LVDS, and CML
- Outputs are 100k LVPECL compatible, 800mV swing
- Power supply 2.5V ±5% and 3.3V ±10%
- Industrial temperature range: -40°C to +85°C e
- Available in 16-pin (3mm x 3mm) QFN package

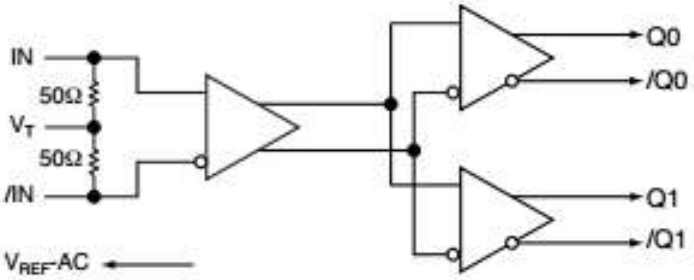

<< BACK

SY58013U

6 GHz, 1:2 Fanout Buffer/Translator w/400mV LVPECL Outputs

Online Datasheet

Features:

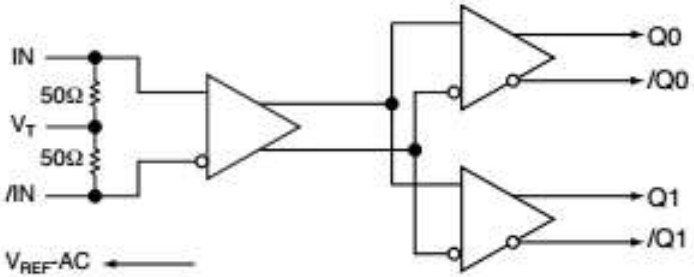

- Precision 1:2, 400mV LVPECL fanout buffer
- Low phase jitter
- <55fsRMS (typical)
- Guaranteed AC performance over temperature –
  - and voltage:
    - >6GHz fMAX clock
    - <80ps tr/tf times
    - <250ps tpd
- <15ps maximum skew
- Accepts an input signal as low as 100mV
- Unique input termination and VT pin accepts DC-coupled and AC-coupled – differential inputs: LVPECL, LVDS, and CML
- 400mV LVPECL compatible outputs
- Power supply 2.5V ±5% and 3.eV ±10%
- Industrial temperature range: -40°C to +85°C
- Available in 16-pin 3mm x 3mm QFN package

<< BACK

SY58606U

4.25Gbps Precision, 1:2 CML Fanout Buffer with Fail Safe Input

Online Datasheet

Features:

- Precision 1:2, 400mV CML fanout buffer
- Guaranteed AC performance over –
  - temperature and voltage:
    - DC-to >4.25Gbps throughput
    - <320ps propagation delay (IN-to-Q)
    - <15ps within-device skew
    - <85ps rise/fall times
- Fail Safe Input
- Prevents outputs from oscillating when input is invalid
- Ultra-low jitter design
- 100fsRMS typical additive jitter
- High-speed CML outputs
- 2.5V ±5% or 3.3V ±10% power supply operation
- Industrial temperature range: -40°C to +85°C
- Available in 16-pin (3mm x 3mm) QFN package

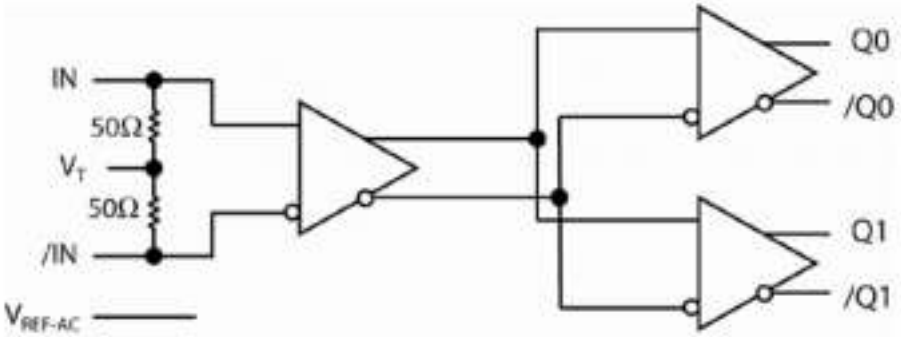

<< BACK

SY58607U

3.2Gbps Precision, 1:2 LVPECL Fanout Buffer with Fail Safe Input

Online Datasheet

Features:

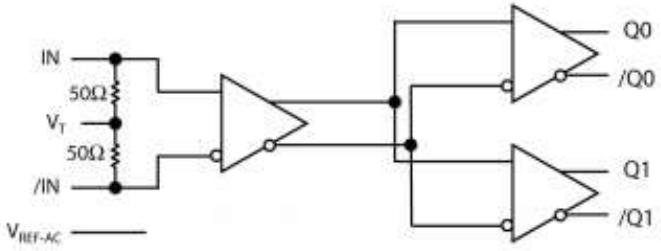

- Precision 1:2, 800mV LVPECL fanout buffer
- Guaranteed AC performance over temperature –
  - and voltage:
    - DC-to >3.2Gbps throughput
    - <350ps propagation delay (IN-to-Q)
    - <20ps within-device skew
    - <110ps rise/fall times
- Fail Safe Input prevents outputs from oscillating when input is invalid
- Ultra-low jitter design
- 85fsRMS phase jitter
- High-speed LVPECL outputs
- 2.5V ±5% or 3.3V ±10% power supply operation
- Industrial temperature range: –40°C to +85°C
- Available in 16-pin (3mm x 3mm) QFN package

<< BACK

SY75572L

267MHz 1:2 3.3V HCSL/LVDS Fanout Buffer

Online Datasheet

Features:

- Two differential pairs of LVDS or HCSL outputs
- Two pairs of differential inputs accept LVDS or HCSL – - logic levels
- 267MHz maximum frequency
- Ultra-low phase jitter:
  - 137fsRMS, 200MHz (12kHz–20MHz)
  - 153fsRMS, 156.25MHz (12kHz–20MHz)
  - 212fsRMS, 100MHz (12kHz–20MHz)
- <2ps total jitter (peak-to-peak), 200MHz (BER = 10-12)
- 50ps output-to-output skew
- 3.3V ±5% power supply operation
- Industrial temperature range: -40°C to +85°C
- Available in 16-pin (3mm × 3mm) QFN package

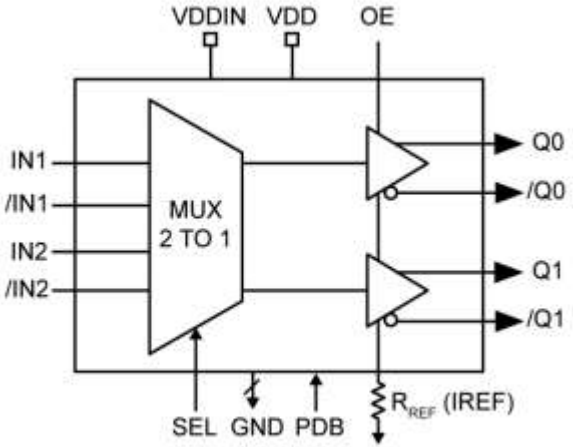

<< BACK

SY89311U

2.5V/3.3V/5V 1:2 Differential PECL/LVPECL/ECL Fanout Buffer

Online Datasheet

Features:

- 2.5V, 3.3V, and 5V power supply
- >Guaranteed AC parameters over temperature:
- fMAX >3.0GHz
- <20ps output-to-output skew
- <200ps tr/tf
- <300ps propagation delay
- 51fsRMS phase jitter (typical)
- 100K compatible I/O
- Industrial temperature range: –40°C to +85°C
- Available in ultra-small 8-pin MLF® (2mm x 2mm) package

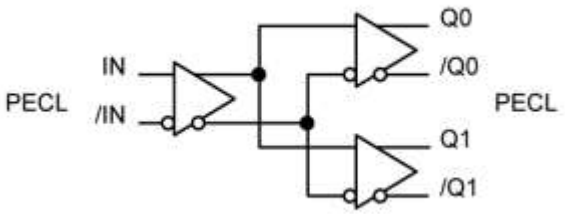

<< BACK

SY89473U

Precision LVPECL 2:1 Multiplexer with 1.2 Fanout

Online Datasheet

Features:

- Selects from two inputs and provides two output copies
- AC performance:
  - DC to 2.5Gbps data throughput
  - DC to 2.5GHz fMAX (clock)
  - <500ps In-to-Out tpd
  - <190ps tr/tf
  - <20ps Output-to-output skew
- Unique patented input isolation design minimizes crosstalk
- Ultra-low Jitter Design:
  - <1psRMS random jitter
  - <1psRMS cycle-to-cycle jitter
  - <10psPP total jitter (clock)
  - <0.7psRMS crosstalk induced jitter
- Unique patent-pending input termination and VT pin –
  - accepts DC and AC-coupled inputs (CML, PECL, LVDS)
- 800mV (100K) LVPECL output swing
- 2.5V ±5% or 3.3V ±10% supply voltage
- Industrial temperature range: -40°C to +85°C

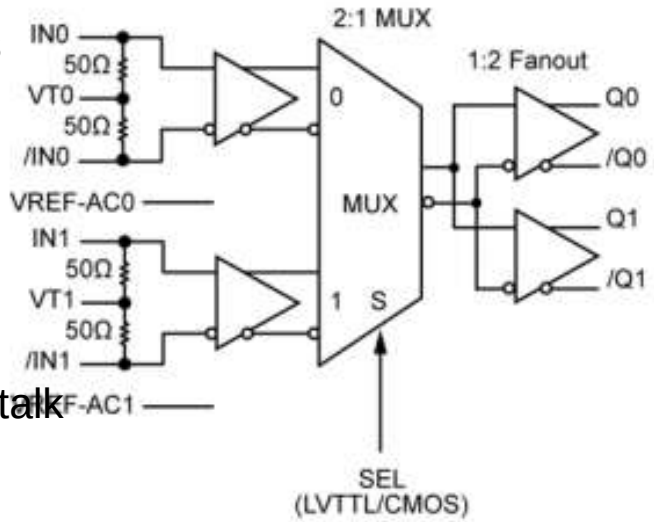

<< BACK

SY89474U

Precision LVDS 2:1 Multiplexer with 1:2 Fanout

Online Datasheet

Features:

- Selects from two inputs and provides two output copies
- AC performance:
  - DC to 2.5Gbps data throughput
  - DC to 2.5GHz fMAX (clock)
  - <470ps In-to-Out tpd
  - <150ps tr/tf
  - <20ps output-to-output skew
- Unique input isolation design minimizes crosstalk
- Ultra-low jitter design:
  - <1psRMS random jitter
  - <10psPP deterministic jitter
  - <1psRMS cycle-to-cycle jitter
  - <10psPP total jitter (clock)
  - <0.7psRMS crosstalk induced jitter
- Unique input termination and VT pin accepts DC and AC – coupled inputs (CML, PECL, LVDS)
- 325mV LVDS output swing
- 2.5V ±5% supply voltage
- Industrial temperature range:-40°C to +85°C
- Available in 24-pin (4mm x 4mm) QFN package

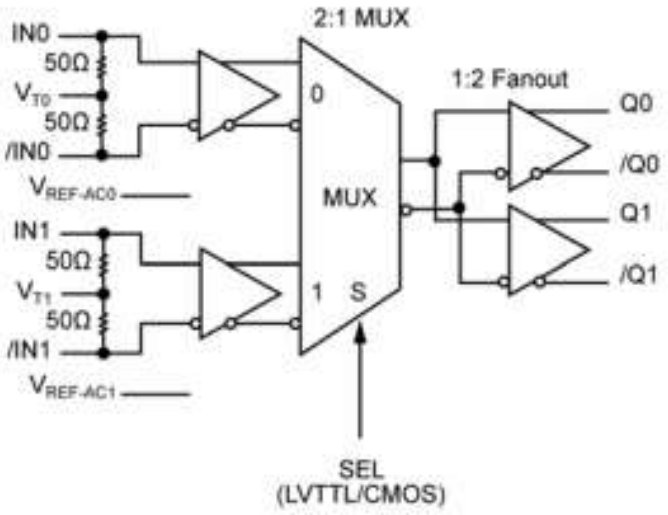

<< BACK

SY89835U

2.5V, 2GHz Ultra-Precision, Differential 1:2 LVDS Fanout Buffer

Online Datasheet

Features:

- AC performance:
  - DC-to >3.2Gbps throughput:
  - 210ps typical propagation delay (IN-to-Q)
  - <20ps within-device skew
  - <150ps rise/fall times
- Fail Safe Input
- Prevents outputs from oscillating
- Ultra-low jitter design:
  - <1psRMS cycle-to-cycle jitter
  - <10psPP total jitter
  - <1psRMS random jitter
  - <10psPP deterministic jitter
- High-speed LVDS outputs
- 2.5V ±5% power supply operation
- Industrial temperature range: -40°C to +85°C
- Available in 8-pin (2mm x 2mm) MLF® package

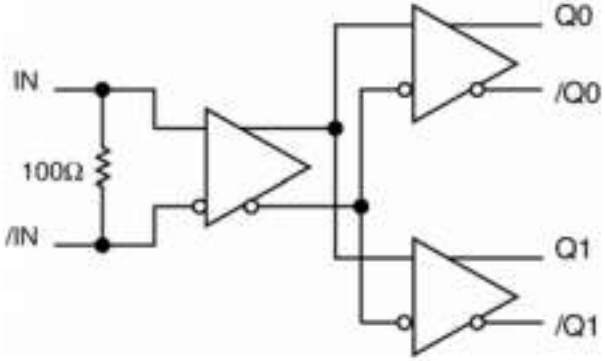

<< BACK

SY89851U

Low Power, 3 GHz, 1:2 LVPECL Fanout Buffer/Translator

Online Datasheet

Features:

- Precision 1:2, 800mV LVPECL fanout buffer
- Low power consumption: 80mW typ. (2.5V)
- Guaranteed AC performance over temperature –
  - and voltage:
    - DC to >3GHz clock throughput
    - <340ps propagation delay
    - <180ps rise/fall time
    - <20ps output-to-output skew
- Ultra-low jitter design:
    - <1psRMS random jitter
    - <10psPP deterministic jitter
    - <10ps PP total jitter (clock)
- Unique, patented input termination and VT pin accepts DC -
  - and AC-coupled inputs (CML, LVPECL, LVDS)
- 100K LVPECL-compatible outputs
- Power supply 2.5V ±5% or 3.3V ±10%
- Industrial temperature range: –40°C to +85°C
- Available in 16-pin (3mm x 3mm) MLF® package

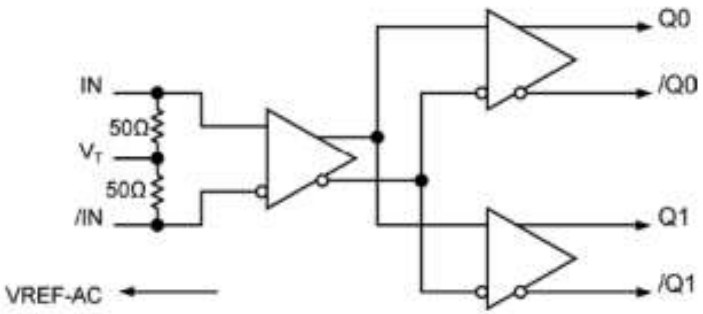

<< BACK

PL133-37

Low-Power, 1.62V to 3.63V, 1MHz to 150MHz, 1:3 Fanout Buffer IC

Online Datasheet

Features:

- 3 LVCMOS Outputs
- 12mA Output Drive Strength
- Input/Output Frequency: Reference Clock: 1MHz to 150MHz
- Supports LVCMOS or Sine Wave Input -- Clock
- Very Low Jitter and Phase Noise
- Low Current Consumption
- Single 1.8V, 2.5V or 3.3V ±10% operation
- Operating Temperature Range:
    - Commercial: 0°C to 70°C
    - Industrial: -40°C to 85°C
- Available in SOT23-6L packages

<< BACK

PL135-37

Low Power 10MHz to 40MHz 1:3 Oscillator Fanout Buffer

Online Datasheet

Features:

- Advanced Oscillator Design for Wide Frequency Coverage
- 3 LVCMOS Outputs
- 12mA Output Drive Strength
- Input/Output Frequency:
  - Fundamental Crystal: 10MHz to 40MHz
- Very Low Jitter and Phase Noise
- Low Current Consumption
- Single 1.62V to 3.63V Power Supply
- Available in SOP-8L package

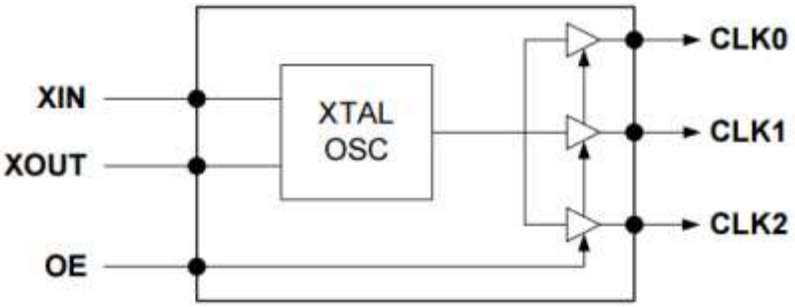

<< BACK

PL133-47

Low-Power 2.25V to 3.63V DC to 150MHz 1:4 Fanout Buffer IC

Online Datasheet

Features:

- 1:4 LVCMOS output fanout buffer for DC to150MHz
- Low Additive Phase Jitter of 60fs RMS
- 8mA Output Drive Strength
- Low power consumption for portable applications
- Low input-output delay
- Output-Output skew less than 250ps
- 2.5V to 3.3V ±10% operation
- Industrial temperature range: -40°C to 85°C
- Available in 8-Pin SOP package

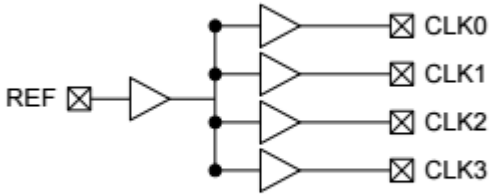

<< BACK

PL138-48

2.5V to 3.3V, Low-Skew, 1:4 Differential PECL Fanout Buffer

Online Datasheet

Features:

- Four differential 2.5V/3.3V LVPECL output -
  - pairs
- Output Frequency: ≤1GHz
- Two selectable differential input pairs
- Translates any standard single-ended or –
  - differential input format to LVPECL output
- Accepts standard input formats and more:
  - LVPECL, LVCMOS, LVDS, HCSL, SSTL, LVHSTL, CML
- Output Skew: 25ps (typ.)
- Part-to-part skew: 140ps (typ.)
- Propagation delay: 1.5ns (typ.)
- Additive Jitter: <100fs (typ.)
- Operating Supply Voltage: 2.375V ~ 3.63V
- Industrial temperature range: -40°C to 85°C
- Package: 20-pin TSSOP

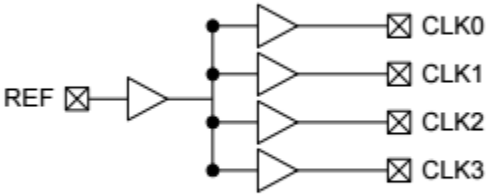

<< BACK

SY100EL15L

3.3V 1:4 Clock Distribution

Online Datasheet

Features:

- 3.3V power supply
- 50ps output-to-output skew
- Low power
- Synchronous enable/disable
- Multiplexed clock input
- 75KΩ internal input pull-down resistors
- Available in 16-pin SOIC package

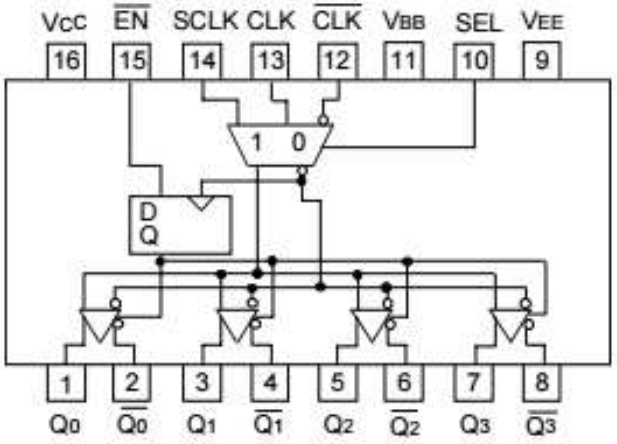

SOIC
TOP VIEW

<< BACK

SY100EL16V

5V/3.3V Differential Receiver

Online Datasheet

Features:

- 3.3V and 5V power supply options
- 250ps propagation delay
- High bandwidth output transitions
- Internal 75KΩ input pull-down resistors
- Replaces SY10/100EL16
- Improved output waveform characteristics
- Available in 8-pin MSOP and SOIC package

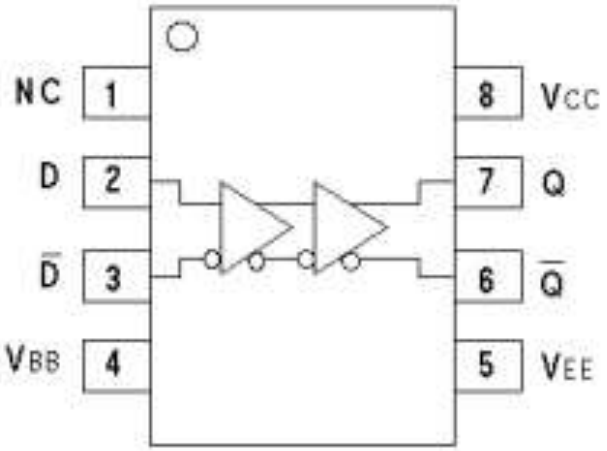

8-Pin MSOP (K8-1)
8-Pin SOIC (Z8-1)

<< BACK

SY100EP15V

3.3V/5V 2.5 GHz PECL/ECL 1:4 Fanout Buffer with 2:1 Input Mux

Online Datasheet

Features:

- High-speed 1:4 PECL/ECL fanout buffer
- 2:1 multiplexer input
- Guaranteed AC parameters over temp/voltage:
  - >2.5GHz fMAX (toggle)
  - <225ps rise/fall times
  - <25ps within device skew
  - <425ps propagation delay (CLK-to-Q)
- Low jitter design:
  - <1psRMS cycle-to-cycle jitter
  - <20psPP total jitter
- Flexible power supply: 3.3V/5V
- Industrial temperature range: –40°C to +85°C
- VBB reference for AC-coupled or single-ended applications
- Output enable/disable function
- 100K PECL/ECL compatible logic
- Input accepts PECL/LVPECL/ECL/HSTL logic levels
- Available in a 16-pin TSSOP package

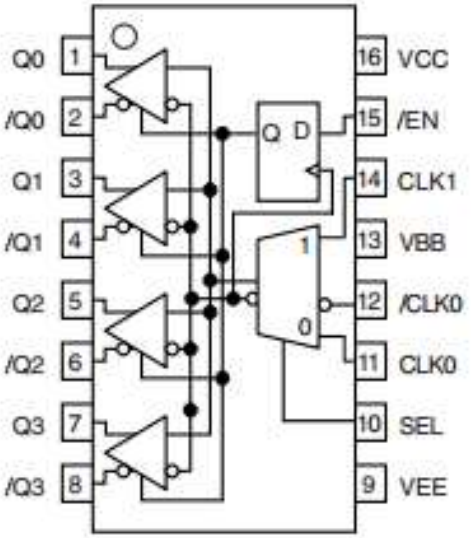

Available in 16-Pin TSSOP (K4-16-1)

<< BACK

SY54020A

3.2GHz Low Voltage 1:4 Fanout Buffer with /EN 3.2Gbps

Online Datasheet

Features:

- 1.2V/1.8V/2.5V CML 1:4 Fanout Buffer
- Active-low Enable (/EN) input to disable the – - outputs
- Guaranteed AC performance over temperature - – and voltage:
  - DC-to- >3.2Gbps throughput
  - DC-to >3.2GHz Clock throughput
  - <320ps propagation delay (IN-to-Q)
  - <20ps within-device skew
  - <100ps rise/fall times
- Ultra-low jitter design:
  - <1psRMS cycle-to-cycle jitter
- High-speed CML outputs
- 2.5V ±5% VCC, 1.2V/1.8V/2.5V ±5% VCCO power supply operation
- Industrial temperature range: -40°C to +85°C
- Available in 16-pin (3mm x 3mm) MLF® package

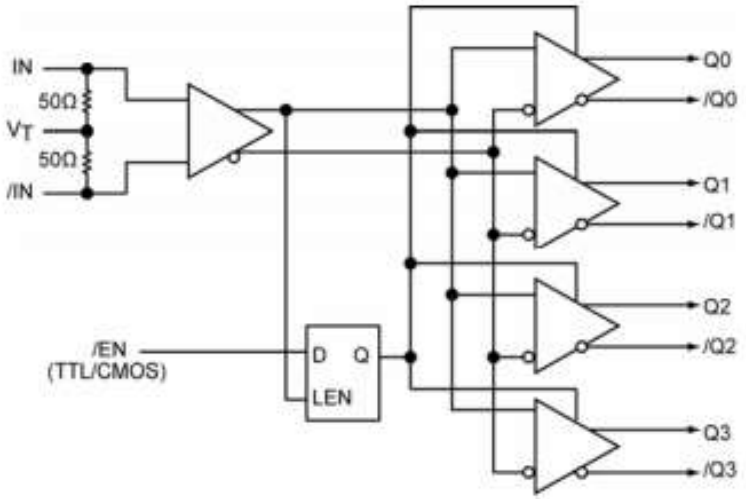

<< BACK

SY54020R

2.5GHz Low Voltage 1:4 Fanout Buffer with /EN and Fail-Safe Input

Online Datasheet

Features:

- 1.2V/1.8V/2.5V CML 1:4 Fanout Buffer w/ FSI
- Active-low Enable (/EN) input to disable the –
  - outputs
- Guaranteed AC performance over temperature –
  - and voltage:
    - DC-to- >3.2Gbps throughput
    - DC-to >2.5GHz Clock throughput
    - <400ps propagation delay (IN-to-Q)
    - <20ps within-device skew
    - <100ps rise/fall times
- Ultra-low jitter design:
    - <1psRMS cycle-to-cycle jitter
- High-speed CML outputs
- 2.5V ±5% VCC, 1.2V/1.8V/2.5V ±5% VCCO power supply operation
- Industrial temperature range: -40°C to +85°C
- Available in 16-pin (3mm x 3mm) QFN package

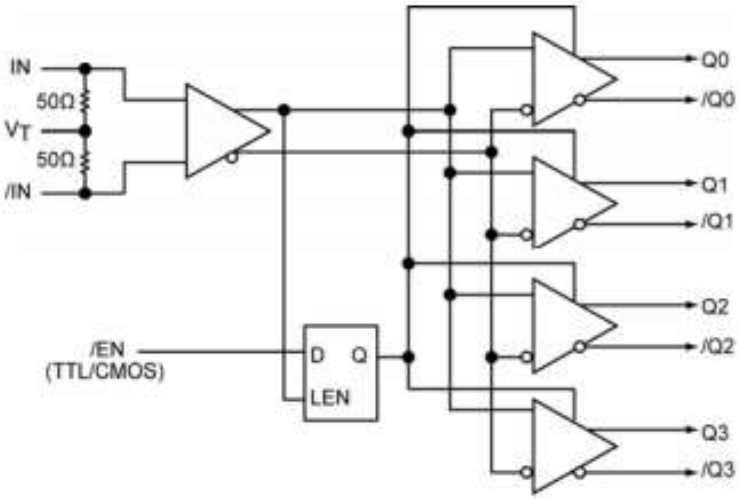

<< BACK

SY6020R

Low Voltage 1:4 Fanout Buffer 6.4Gbps with Equalization

Online Datasheet

Features:

- 1.2V/1.8V/2.5V CML 1:4 Fanout Buffer
- Equalizes 9, 18, 27 inches of FR4
- Guaranteed AC performance over temperature –
  - and voltage:
    - DC-to >6.4Gbps Data throughput
    - DC-to >4.5GHz Clock throughput
    - <280 ps propagation delay (IN-to-Q)
    - <15ps within-device skew
    - <90ps rise/fall times
- Ultra-low jitter design:
    - <1psRMS random jitter
- High-speed CML outputs
- 2.5V ±5% VCC , 1.2/1.8V/2.5V ±5% VCCO power supply operation
- Industrial temperature range: -40°C to +85°C
- Available in 16-pin (3mm x 3mm) QFN package

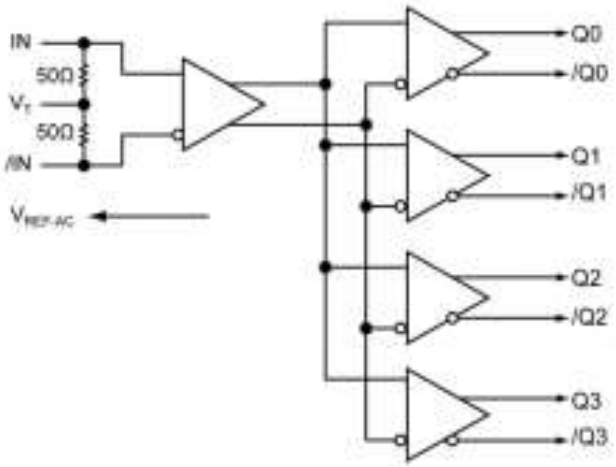

<< BACK

SY58020U

6GHz, 1:4 CML Fanout Buffer/Translator with Internal I/O Termination

Online Datasheet

Features:

- Precision 1:4, 400mV CML fanout buffer
- Guaranteed AC performance over –
  - temperature/voltage:
    - >6GHz fMAX clock
    - <60ps tr/tf times
    - <250ps tpd
    - <15ps max. skew
- Low jitter performance:
    - <10pspp total jitter (clock)
    - <1psrms random jitter (data)
    - <10pspp deterministic jitter (data)
- Accepts an input signal as low as 100mV
- Unique input termination and VTpin accepts DC coupled and AC-
  - coupled differential inputs: LVPECL, LVDS, and CML
- 50Ω source terminated CML outputs
- Power supply 2.5V ±5% and 3.3V ±10%
- Industrial temperature range: -40°C to +85°C
- Available in 16-pin (3mm x 3mm) MLF® package

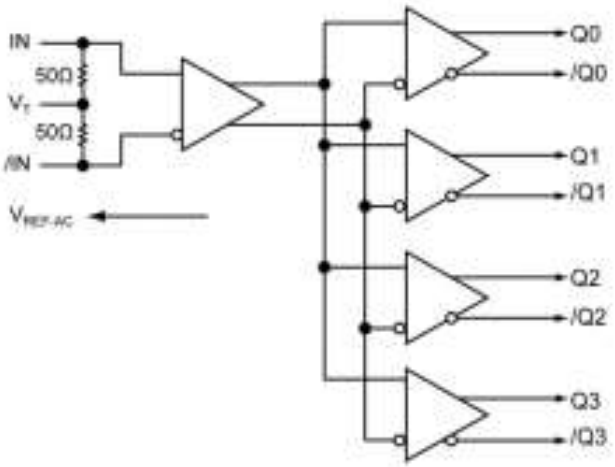

<< BACK

SY58021U

4GHz, 1:4 LVPECL Fanout Buffer/Translator with Internal Termination

Online Datasheet

Features:

- Precision 1:4 LVPECL fanout buffer
- Low jitter performance:
  - 70fsRMS phase jitter (typical)
- Accepts an input signal as low as 100mV
- Unique input termination and VT pin accepts -
  - DC-coupled and AC-coupled differential –
  - inputs:
    - LVPECL, LVDS, and CML
- 100k LVPECL-compatible 800mV swing output
- Power supply 2.5V ±5% and 3.3V ±10%
- Industrial temperature range: -40°C to +85°C range
- Available in 16-pin (3mm x 3mm) QFN package

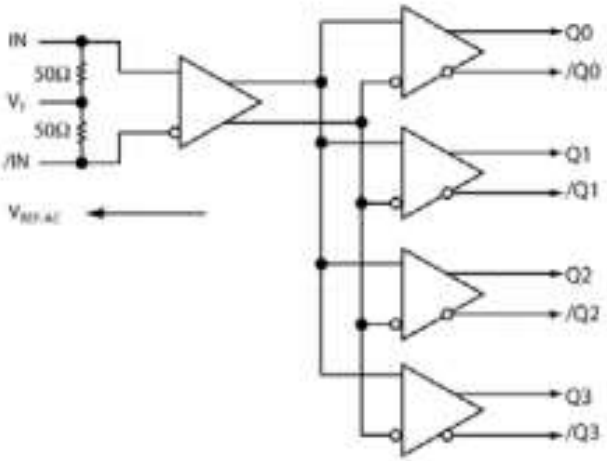

<< BACK

SY58022U

5.5GHz 1:4 Fanout Buffer/ Translator w/400mV LVPECL Outputs

Online Datasheet

Features:

- Precision 1:4, 400mV LVPECL fanout buffer
- Guaranteed AC performance over temperature –
  - and voltage:
    - > 5.5GHz fMAX clock
    - <80ps tr/tf times
    - <250ps (VIN ≥300mV) tpd
    - <15ps max. skew
- Low jitter performance:
    - 60fs RMS phase jitter
- Accepts an input signal as low as 100mV
- Unique input termination and VT pin accepts DC and -
  - AC-coupled differential inputs: LVPECL, LVDS and CML
- 400mV LVPECL compatible outputs
- Power supply 2.5V ±5% and 3.3V ±10%
- Industrial temperature range: -40°C to +85°C
- Available in 16-pin (3mm x 3mm) QFN package

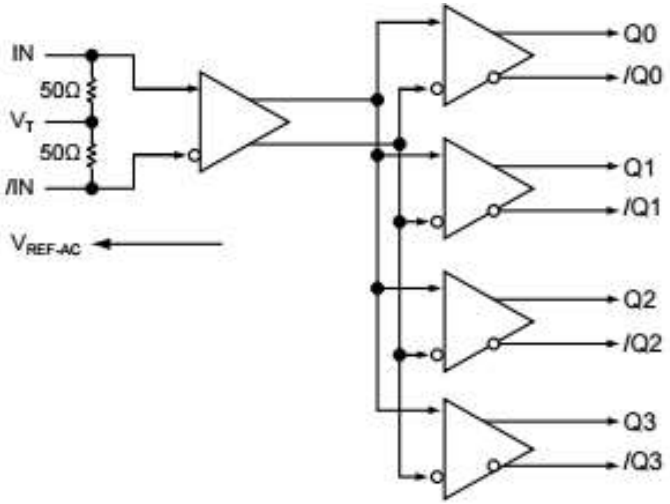

<< BACK

SY75576L

267MHz 1:4 3.3V HCSL/LVDS Fanout Buffer Precision Edge™

Online Datasheet

Features:

- Four differential pairs of LVDS or HCSL outputs
- Two pairs of differential inputs accept LVDS or –- HCSL logic levels
- 267MHz max HCSL frequency
- 100MHz max LVDS frequency
- Ultra low phase jitter:
  - 137fsrms, 200MHz (12kHz–20MHz)
  - 153fsrms, 156.25MHz (12kHz–20MHz)
  - 212fsrms, 100MHz (12kHz–20MHz)
- <2ps Total_Jitterpk-pk, 200MHz (BER = 10^{-12})
- 50ps output-to-output skew
- 3.3V ±5% power supply operation
- Industrial temperature range: −40°C to +85°C
- Available in 20-pin TSSOP package

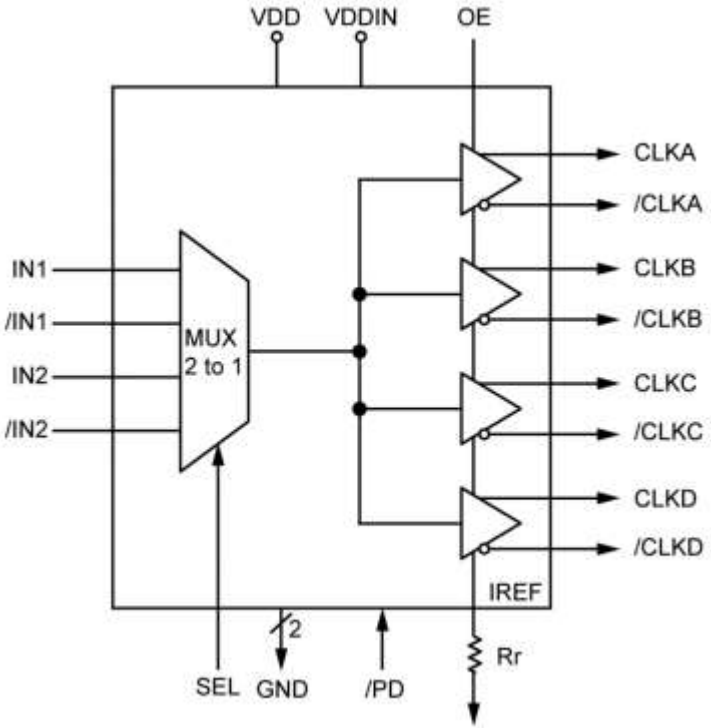

<< BACK

SY89645L

Precision Low Skew, 1-to-4 LVCMOS/LVTTL-to-LVDS Fanout Buffer

Online Datasheet

Features:

- Four identical LVDS outputs
- CLKIN accepts LVCMOS or LVTTL input levels
- Maximum output frequency: 650MHz
- Translates LVCMOS/LVTTL input signals to –
  - LVDS levels
- <40ps output-to-output skew
- <3ns propagation delay
- <400ps rise/fall times
- 3.3V ±5% operating supply
- Industrial temperature range: -40°C to +85°C
- Available in 20-pin TSSOP

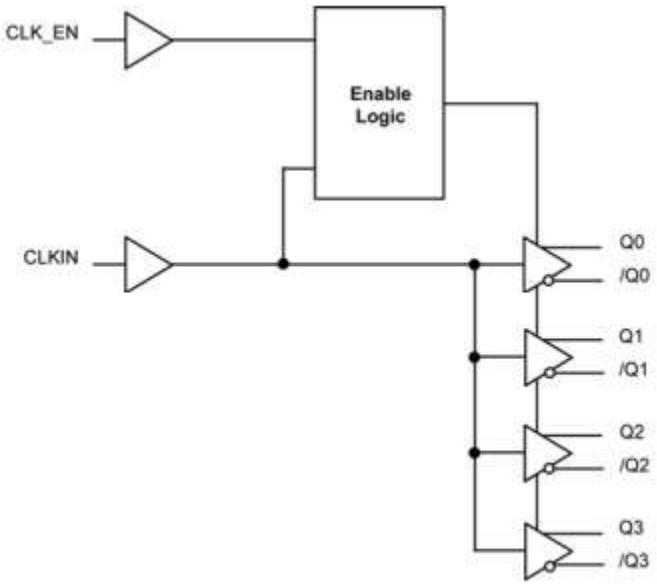

<< BACK

SY89830U

2.5GHz 1:4 PECL/ECL Clock Driver with 2:1 MUX

Online Datasheet

Features:

- Guaranteed AC parameters over temp/voltage:
  - >2.5GHz fMAX
  - <25ps within-device skew
  - <225ps tr/tf time
  - <450ps prop delay
- Low jitter design:
  - <1psRMS cycle-to-cycle jitter
  - <15psPP total jitter
- 2:1 Differential MUX input
- Flexible supply voltage: 2.5V/3.3V/5V
- Wide operating temperature range: -40°C to +85°C
- 100K ECL compatible outputs
- Inputs accept PECL/LVPECL/ECL/HSTL logic levels
- Available in a 16-pin TSSOP package

<< BACK

SY89831U

Ultra-Precision 1:4 LVPECL Fanout Buffer/Translator

Online Datasheet

Features:

- Guaranteed AC performance over temperature –
  - and voltage:
    - DC-to-2.5GHz throughput (typical)
    - 350ps propagation delay (IN-to-Q) (typical)
    - 5ps within-device skew (typical)
    - 150ps rise/fall time (typical)
- Ultra-low jitter design:
    - 62fsRMS phase jitter (typical)
- Unique patent-pending input termination and –
  - VT pin accepts DC- and AC-coupled –
  - differential inputs
- 800mV, 100K LVPECL typical output swing
- Power supply 2.5V ±5% or 3.3V ±10%
- Industrial temperature range: -40°C to +85°C
- Available in 16-pin (3mm x 3mm) MLF® package

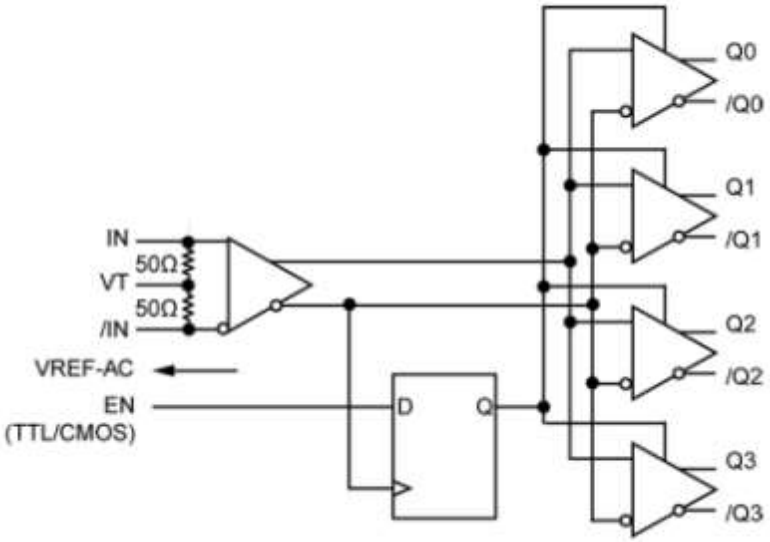

<< BACK

SY89832U

2.5V Ultra-Precision 1:4 LVDS Fanout Buffer/Translator

Online Datasheet

Features:

- Guaranteed AC performance over temperature –
  - and voltage:
    - DC-to >2.0GHz throughput
    - <570ps propagation delay (IN-to-Q)
    - <20ps within-device skew
    - <200ps rise/fall time
- Ultra-low jitter design:
    - 81fsRMS phase jitter
- Unique, patent-pending input termination and –
  - VT pin accepts DC- and AC-coupled inputs
- High-speed LVDS outputs
- 2.5V voltage supply operation
- Industrial temperature range: -40°C to +85°C
- Available in 16-pin (3mm x 3mm) QFN package

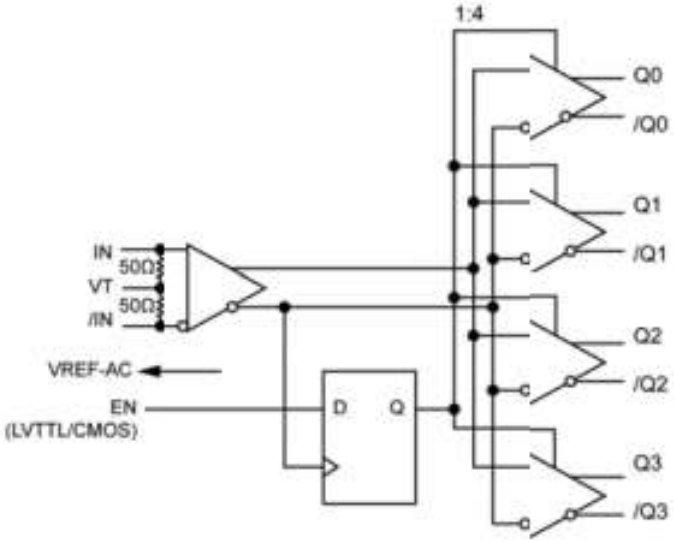

<< BACK

SY89833AL

3.3V Low Noise Ultra-Precision 1:4 LVDS Fanout Buffer/Translator

Online Datasheet

Features:

- Guaranteed AC performance over temperature -– and voltage:
  - DC-to >2.0GHz throughput
  - <470ps propagation delay (IN-to-Q)
  - <20ps within-device skew
  - <190ps rise/fall time
- Improved ultra-low jitter design:
  - 195fsRMS phase jitter (typ.)
- Unique input termination and VT pin accepts –- DC- and AC-coupled inputs
- High-speed LVDS outputs
- 3.3V power supply operation
- Industrial temperature range: -40°C to +85°C
- Available in 16-pin (3mm x 3mm) QFN package

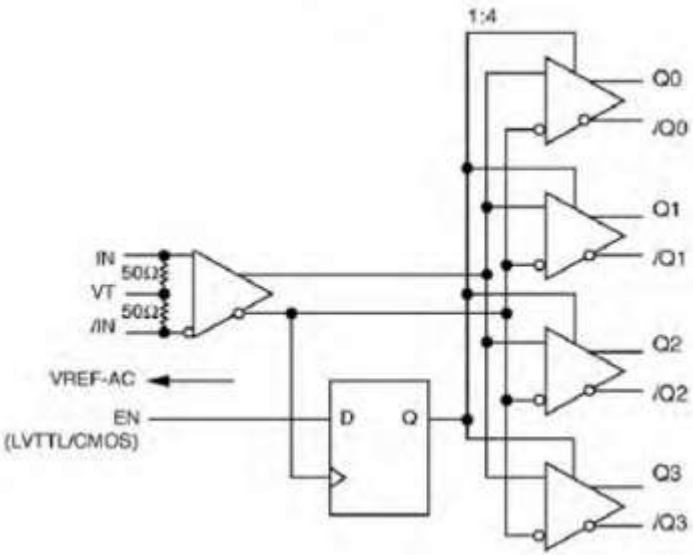

<< BACK

SY89833L

3.3V Ultra-Precision 1:4 LVDS Fanout Buffer/Translator

Online Datasheet

Features:

- Guaranteed AC performance over temperature – and voltage:
- DC-to >2GHz throughput:
  - <600ps propagation delay (IN-to-Q)
  - <20ps within-device skew
  - <190ps rise/fall times
- Ultra-low jitter design:
- 98fsRMS phase jitter
- Unique input termination and VTpin accepts -- DC and AC-coupled inputs
- High-speed LVDS outputs
- 3.3V power supply operation
- Industrial temperature range: -40°C to +85°C
- Available in 16-pin (3mm x 3mm) QFN package

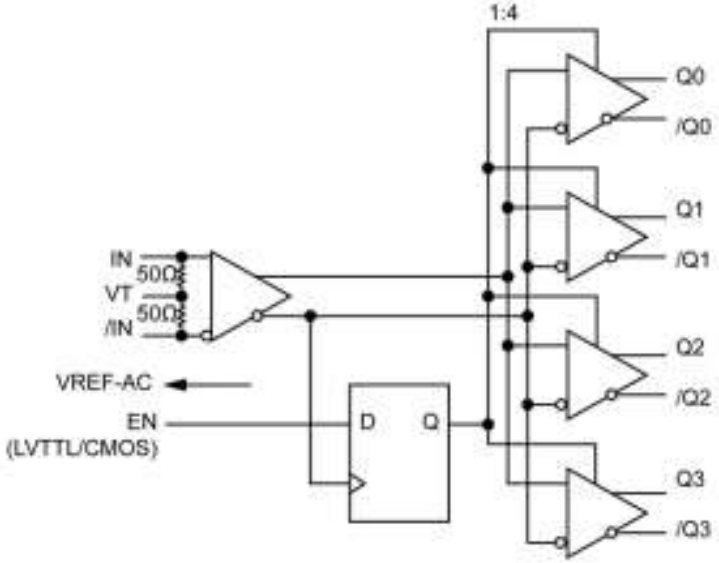

<< BACK

SY89834U

Two Input, 1GHz LVTTL/CMOS-TO-LVPECL 1:4 Fanout Buffer/Translator

Online Datasheet

Features:

- Selects between two LVTTL/CMOS inputs and – - provides
- 4 LVPECL output copies
- AC performance:
  - DC-to >1.0GHz throughput
  - <500ps propagation delay (IN-to-Q)
  - <20ps within-device skew
  - <225ps rise/fall time
- Ultra-low jitter design:
  - <1psRMS cycle-to-cycle jitter
  - <1psRMS random jitter
  - <10psPP deterministic jitter
  - <10psPP total jitter (clock)
- Low voltage 2.5V and 3.3V supply operation
- 100K LVPECL outputs
- Industrial temperature range: -40°C to +85°C
- Includes a 2:1 MUX select input
- Available in 16-pin (3mm x 3mm) MLF® package

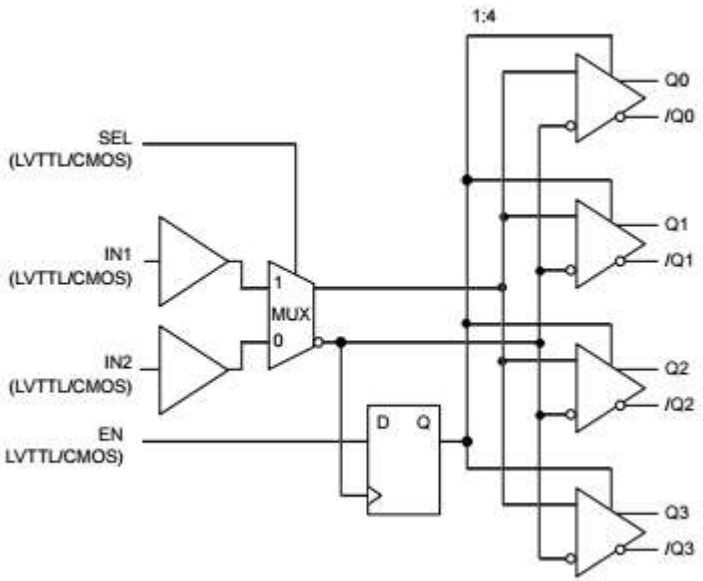

<< BACK

SY898533L

Precision Differential 3.3V Low Skew LVPECL 1:4 Fanout Buffer

Online Datasheet

Features:

- Provides four differential 3.3V LVPECL copies
- Selects between differential CLK, /CLK or –
  - LVPECL clock inputs
- CLK, /CLK pair accepts LVDS, LVPECL, -
  - LVHSTL, SSTL, HCSL input levels
- PCLK, /PCLK pair accepts LVPECL, CML, -
  - SSTL input levels
- AC performance:
  - 650MHz Maximum output frequency
  - <1.4ns Propagation delay (In-to-Q)
  - <30ps Output skew
  - <150ps Part-to-part skew
- Additive phase jitter, RMS: 0.06ps (typical)
- 3.3V ±5% supply voltage
- Commercial temperature range: 0°C to +70°C
- Available in a 20-pin TSSOP package

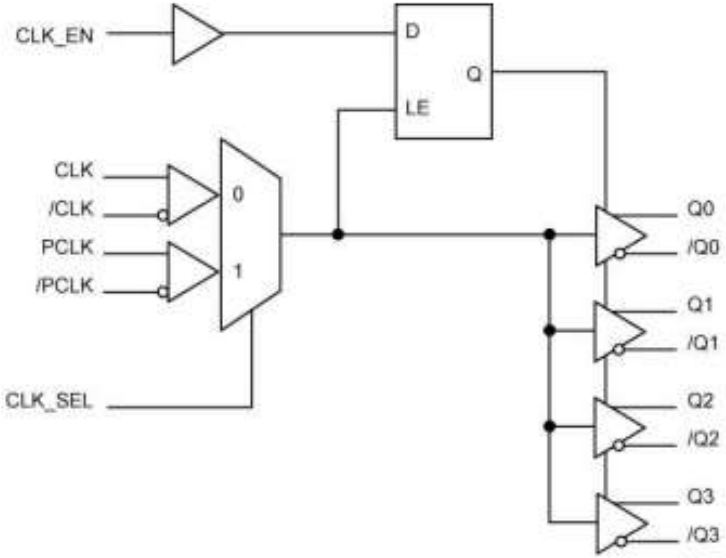

<< BACK

SY898535XL

Precision Differential 3.3V, Low Skew, 1:4 Fanout Buffer

Online Datasheet

Features:

- Provides four differential 3.3V LVPECL copies
- Selects between single-ended CLK or crystal – - inputs
- CLK accepts LVCMOS or LVTTL input levels
- AC performance:
  - 235MHz Maximum output frequency
  - <1.65ns Propagation delay (In-to-Q)
  - <30ps Output skew
  - <200ps Part-to-part skew
- Additive phase jitter, RMS: 0.09ps (typical)
- 3.3V ±5% supply voltage
- Industrial temperature range: –40°C to +85°C
- Available in a 20-pin TSSOP package

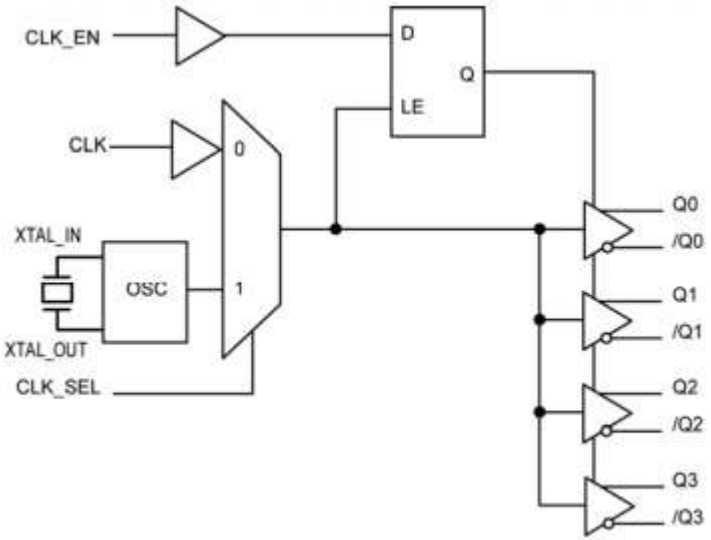

<< BACK

SY89854U

Precision Low Power 1:4 LVPECL Fanout Buffer/Translator

Online Datasheet

Features:

- Precision 1:4, LVPECL fanout buffer
- Low power: 137mW (2.5V typ)
- Guaranteed AC performance over temperature –
  - and supply voltage:
    - DC- to >2GHz Clock fMAX
    - <340ps tpd
    - <180ps tr/tf time
    - <20ps max. skew
- Ultra-low jitter design:
    - <1psrms random jitter
    - <10pspp deterministic jitter
    - <10pspp total jitter (clock)
- Unique patent pending input termination and VT pin accepts
- DC-coupled and AC-coupled inputs (CML, PECL, LVDS)
- Typical 800mV (100k) LVPECL output swing
- Power supply 2.5V ±5% or 3.3V ±10%
- Industrial temperature range” -40°C to +85°C
- Available in ultra-small (3mm x 3mm) 16-pin QFN package

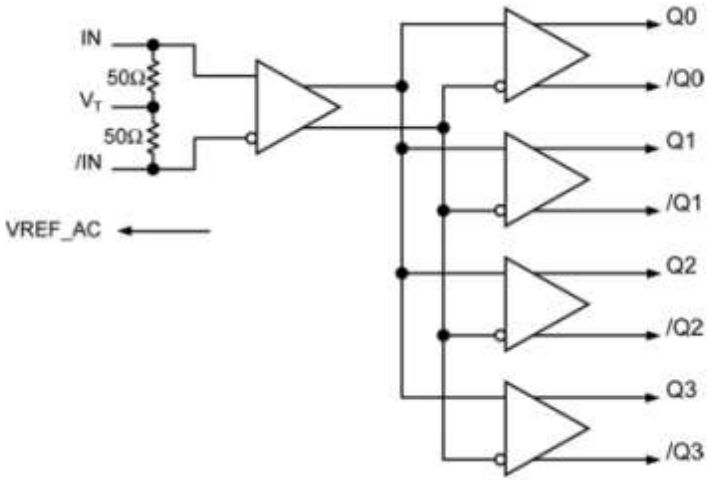

<< BACK

SY100EL14

5V/3.3V 1:5 Clock Distribution

Online Datasheet

Features:

- 3.3V and 5V power supply options
- 70fsRMS typical additive phase jitter
- Typical 30ps output-to-output skew
- Max. 50ps output-to-output skew
- Synchronous enable/disable
- Multiplexed clock input
- 75KΩ internal input pull-down resistors
- Available in 20-pin SOIC package

<< BACK

SY100EP14U

2.5V/3.3V/5V 1:5 2GHz Clock Driver with 2:1 MUX

Online Datasheet

Features:

- Guaranteed AC parameters over temp/voltage:
  - >2GHz fMAX
  - <25ps within-device skew
  - <275ps tr/tf time
  - <525ps prop delay
- 2:1 Differential MUX input
- Flexible supply voltage: 2.5V/3.3V/5V
- Wide operating temperature range: -40°C to +85°C
- VBB reference for single-ended or AC-coupled PECL inputs
- 100K ECL compatible outputs
- Inputs accept PECL/LVPECL/ECL/HSTL logic
- 75k internal input pull-down resistors
- Available in a 20-Pin TSSOP package

<< BACK

SY89846U

1.5GHz Precision, LVPECL 1:5 Fanout with 2:1 MUX and Fail Safe Input

Online Datasheet

Features:

- Select from two inputs and provides 5 copies
- Fail-Safe Input:
  - Prevents outputs from oscillating when input is invalid
- AC performance:
  - DC-to >1.5GHz throughput
  - <900ps Propagation Delay (IN-to-Q)
  - <250ps Rise/Fall times
- Ultra-low jitter design:
  - 150fsRMS phase jitter (typ.)
  - <0.7psRMS MUX crosstalk induced jitter
- Unique, patented MUX input isolation design – - minimizes adjacent channel crosstalk
- Patented internal termination & VT pin accepts DC- and AC-coupled inputs (CML, PECL, LVDS)
- Wide input voltage range. VCC to GND
- 2.5V ±5% or 3.3 ±10% supply voltage
- Industrial temperature range: -40°C to +85°C
- Available in 32-pin (5mm x 5mm) QFN package

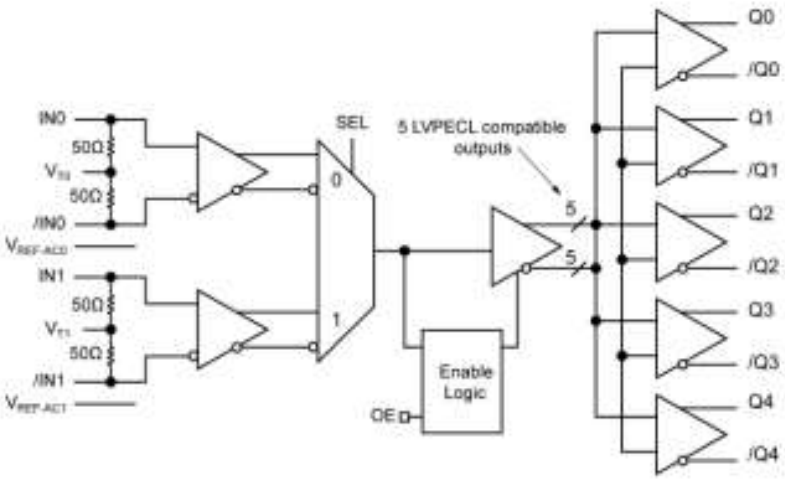

<< BACK

SY89847U

1.5GHz Precision, LVDS 1:5 Fanout with 2:1 MUX and Fail Safe Input

Online Datasheet

Features:

- Selects between two sources, and provides 5 –
  - precision LVDS copies
- Fail-Safe Input:
  - Prevents outputs from oscillating when –
    - input is invalid
- Guaranteed AC performance over temperature -
  – & supply voltage:
  - DC-to >1.5GHz throughput
  - <1000ps Propagation Delay (IN-to-Q)
  - <210ps Rise/Fall times
- Ultra-low jitter design:
  - 150fsRMS phase jitter (typ.)
  - <0.7psRMS MUX crosstalk induced jitter
- Unique, patented MUX input isolation design minimizes adjacent channel crosstalk
- Unique, patented internal termination and VT pin accepts DC and AC-coupled –
  - inputs (CML, PECL, LVDS)
- Wide input voltage range VCC to GND
- 2.5V ±5% supply voltage
- Industrial temperature range: -40°C to +85°C
- Available in 32-pin (5mm x 5mm) QFN package

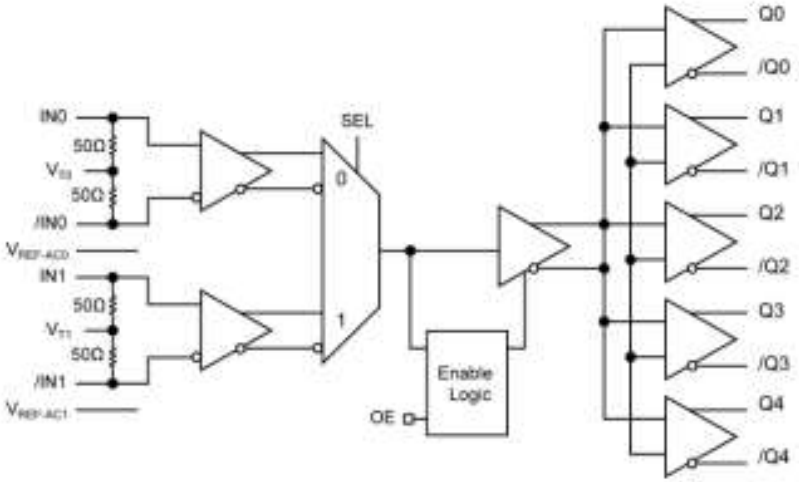

<< BACK

PL133-67

Low-Power DC to 150MHz 1:6 Fanout Buffer IC

Online Datasheet

Features:

- 1:6 LVCMOS output fanout buffer for DC to150MHz
- 8mA Output Drive Strength
- Low power consumption for portable applications
- Low input-output delay
- Output-Output skew less than 250ps
- Low Additive Phase Jitter of 60fs RMS
- 2.5V to 3.3V ±10% operation
- Industrial temperature range: -40°C to 85°C
- Available in 16-Pin SOP package

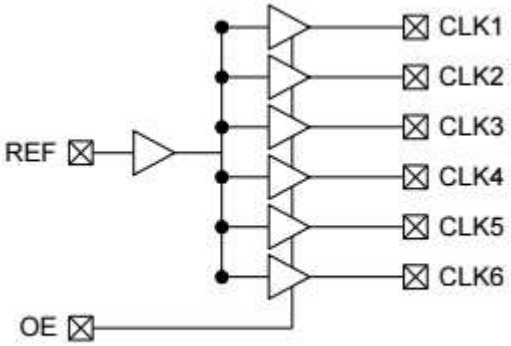

<< BACK

PL135-67

Low Power, 10MHz to 40MHz, 1:6 Oscillator Fanout Buffer

Online Datasheet

Features:

- Advanced Oscillator Design for Wide –
  - Frequency Coverage
- 6 LVCMOS Outputs with 2 Output Enable Pins
- 8mA Output Drive Strength
- Input/Output Frequency:
- Fundamental Crystal: 10MHz to 40MHz
- Very Low Jitter and Phase Noise
- Low Current Consumption
- Single 1.62V to 3.63V Power Supply
- Available in QFN-16L and TSSOP-16L packages

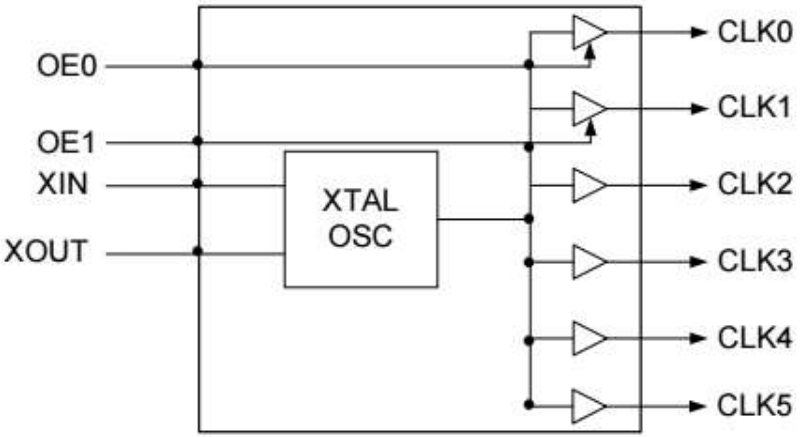

<< BACK

SY58034U

6GHz, 1:6 CML Fanout Buffer with 2:1 MUX Input

Online Datasheet

Features:

- Provides six ultra-low skew copies of the selected input
- 2:1 MUX input included for clock switchover –
  - applications
- Guaranteed AC performance over temperature and –
  - voltage:
- Clock frequency range: DC to >6GHz
  - <290ps IN-to-OUT tpd
  - <60ps tr/tf times
  - <20ps skew (output-to-output)
- Unique input isolation design minimizes crosstalk
- Ultra low-jitter design:
  - 60fs RMS phase jitter
  - <0.7psRMS crosstalk-induced jitter
- Low supply voltage operation: 2.5V and 3.3V
- Unique input termination and VT pin accepts DC-coupled -
  - and AC-coupled inputs (CML, PECL, LVDS)
- Internal 50Ω output source termination
- 400mV CML output swing
- Industrial temperature range: -40°C to +85°C
- Available in 32-pin (5mm x 5mm) QFN package

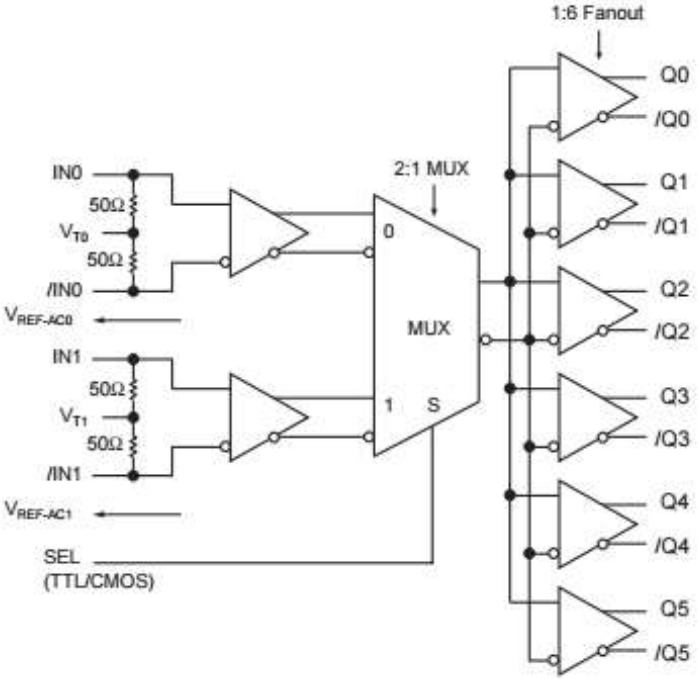

<< BACK

SY58035U

4.5GHz, 1:6 LVPECL Fanout Buffer with 2:1 MUX Input

Online Datasheet

Features:

- Provides six ultra-low skew copies of the selected – - input
- 2:1 MUX input included for clock switchover – - applications
- Guaranteed AC performance over temperature and - – voltage:
  - Clock frequency range: DC to >4.5GHz
  - <320ps IN-to-OUT tpd
  - <110ps tr/tf times
  - <20ps skew (output-to-output)
- Ultra-low jitter design:
  - 50fsRMS phase jitter (typ)
- Low supply voltage operation: 2.5V and 3.3V
- Unique input termination and VTpin accepts DC – - coupled and AC-coupled inputs (CML, PECL, LVDS)
- Unique input isolation design minimizes crosstalk
- 100K LVPECL compatible output swing
- Industrial temperature range: -40°C to +85°C
- Available in 32-pin (5mm x 5mm) MLF® package

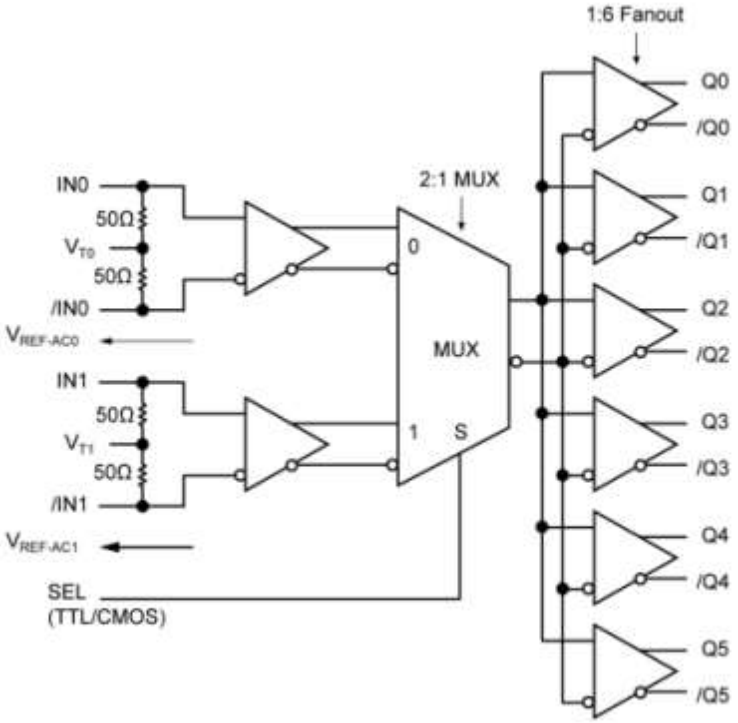

<< BACK

SY58036U

6GHz, 1:6 400mV LVPECL Fanout Buffer with 2:1 MUX Input

Online Datasheet

Features:

- Provides six ultra-low skew copies of the selected –
  - input
- 2:1 MUX input included for clock switchover applications
- Guaranteed AC performance over temperature and -
  - voltage:
    - Clock frequency range: DC to >6GHz
    - <300ps IN-to-OUT tpd
    - <80ps tr/tf times
    - <20ps skew (output-to-output)
- Ultra-low jitter design:
    - 50fsRMS phase jitter (typ)
- Low supply voltage operation: 2.5V and 3.3V
- Unique input termination and VTpin accepts DC –
  - coupled and AC-coupled inputs (CML, PECL, LVDS)
- Unique input isolation design minimizes crosstalk
- 400mV LVPECL (100K compatible) output swing
- Industrial temperature range: -40°C to +85°C
- Available in 32-pin (5mm x 5mm) MLF® package

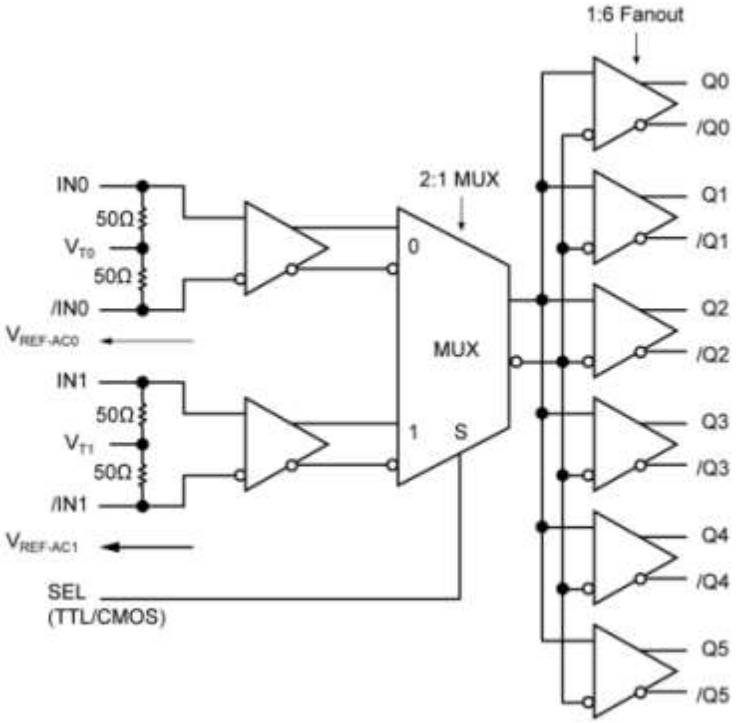

<< BACK

SY89856U

2GHz, Low-Power, 1:6 LVPECL Fanout Buffer with 2:1 Input MUX

Online Datasheet

Features:

- 6 ultra-low skew copies of the selected input
- 2:1 MUX input included for clock switchover applications
- Low power: 225mW typical (2.5V)
- 2.5V to 3.3V supply voltage
- Unique input isolation design minimizes crosstalk
- Guaranteed AC performance over temperature and -– voltage:
  - Clock frequency range: DC to >2.0GHz
  - <400ps IN-to-OUT tpd
  - <200ps tr/tf times
  - <30ps skew (output-to-output)
- Ultra-low jitter design:
  - 40fsRMS phase jitter
  - <0.7psRMS crosstalk-induced jitter
- Unique input termination and VT pin accepts DC –- and AC-coupled inputs (CML, PECL, LVDS)
- 100k LVPECL compatible output swing
- Industrial temperature range: -40°C to +85°C range
- Available in 32-pin (5mm x 5mm) QFN package

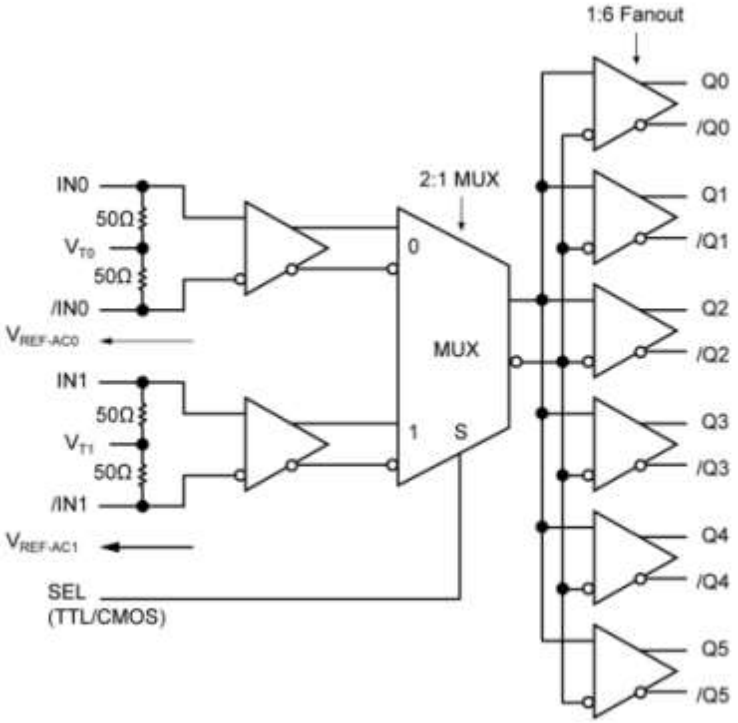

<< BACK

SY58031U

Ultra-Precision 1:8 CML Fanout Buffer

Online Datasheet

Features:

- Precision 1:8, 400mV CML fanout buffer
- Guaranteed AC performance over temperature – - and voltage:
  - Clock frequency range: DC to >6GHz
  - <60ps tr/tf time
  - <270ps tpd
  - <20ps ouput-to-output skew
- Low-jitter performance:
  - 75fsRMS phase jitter (typ)
- 50Ω source-terminated CML outputs
- 400mV CML output swing into 50Ω load
- Fully differential I/O
- Accepts an input signal as low as 100mV
- Unique input termination and VT pin accepts DC-coupled and AC-coupled differential inputs: - - (LVPECL, LVDS, and CML)
- Power supply 2.5V ±5% or 3.3V ±10%
- Industrial temperature range: -40°C to +85°C
- Available in 32-pin (5mm x 5mm) MLF® package

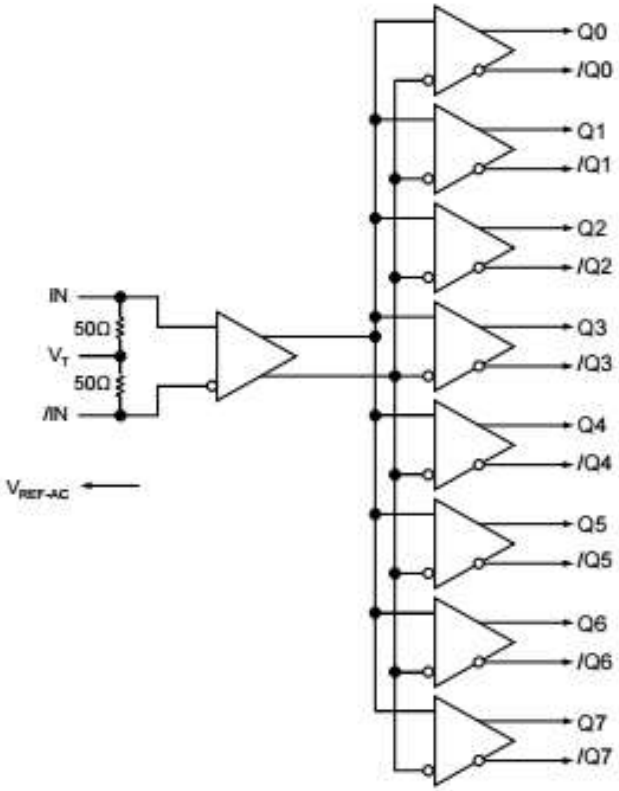

<< BACK

SY58032U

Ultra-Precision 1:8 Fanout Buffer with LVPECL Outputs

Online Datasheet

Features:

- Precision 1:8, LVPECL fanout buffer
- Guaranteed AC performance over temperature –
  - and voltage:
    - Clock frequency range: DC to 4GHz
    - <110ps tr/tf time
    - <330ps tpd
    - <20ps skew
- Low-jitter performance:
    - 76fsRMS phase jitter (typ)
- 100k LVPECL compatible outputs
- Fully differential inputs/outputs
- Accepts an input signal as low as 100mV
- Unique input termination and VT pin accepts DC-coupled and AC-coupled differential inputs: -
  - LVPECL, LVDS, and CML
- Power supply 2.5V ±5% or 3.3V ±10%
- Industrial temperature range: -40°C to +85°C
- Available in 32-pin (5mm x 5mm) MLF® package

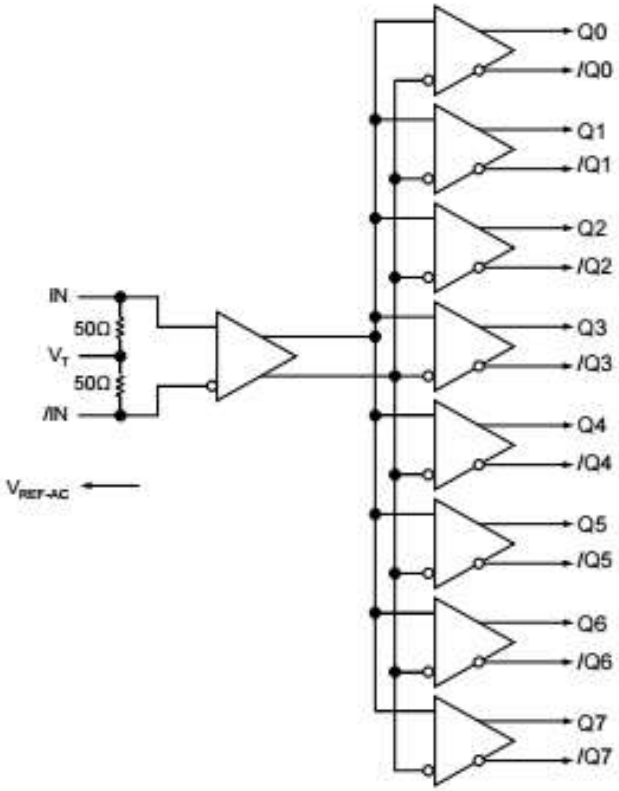

<< BACK

SY58033U

Ultra-Precision 1:8 Fanout Buffer with 400mV LVPECL Outputs

Online Datasheet

Features:

- Precision 1:8, 400mV LVPECL fanout buffer
- Guaranteed AC performance over temperature –
  - and voltage:
- Clock frequency range: DC to 5.5GHz:
  - <80ps tr/tf times
  - <280ps tpd
  - <20ps skew
- Low-jitter performance:
  - 76fsRMS phase jitter (typ)
  - "top" >100k LVPECL compatible outputs
- Fully differential inputs/outputs
- Accepts an input signal as low as 100mV
- Unique input termination and VT pin accepts –
  - DC-coupled and AC-coupled differential inputs: -
  - LVPECL, LVDS, and CML
- Power supply 2.5V ±5% or 3.3V ±10%
- Industrial temperature range: -40°C to +85°C
- Available in 32-pin (5mm x 5mm) MLF® package

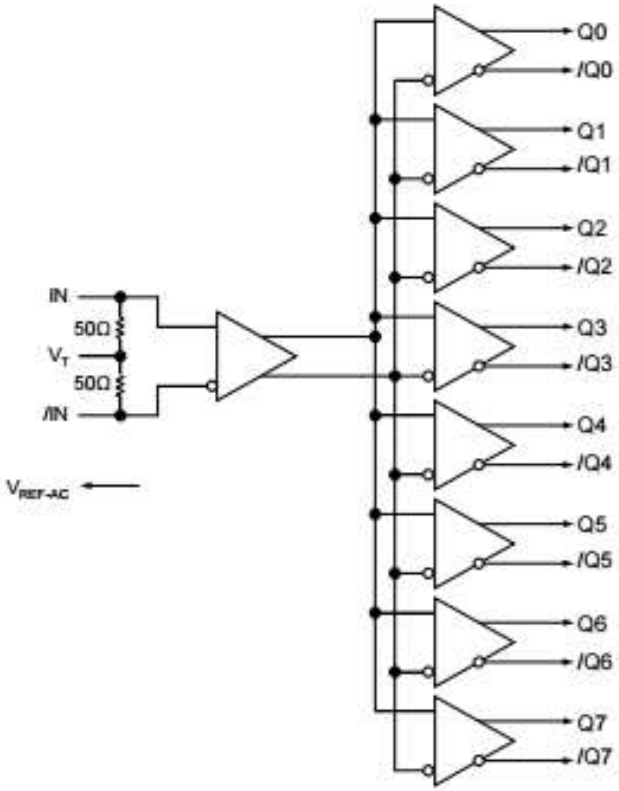

<< BACK

SY75578L

PCIe Fanout Buffer 267MHz, 8 HCSL Outputs with 2 Input MUX

Online Datasheet

Features:

- Eight differential pairs of HCSL outputs
- Two pairs of differential inputs accept LVDS or HCSL logic levels
- 267MHz max frequency
- Ultra low phase jitter:
  - 130fsRMS phase jitter (typ)
- <100ps output-to-output skew
- 3.3V power supply operation
- Industrial temperature range: -40°C to +85°C
- Available in 32-pin QFN package

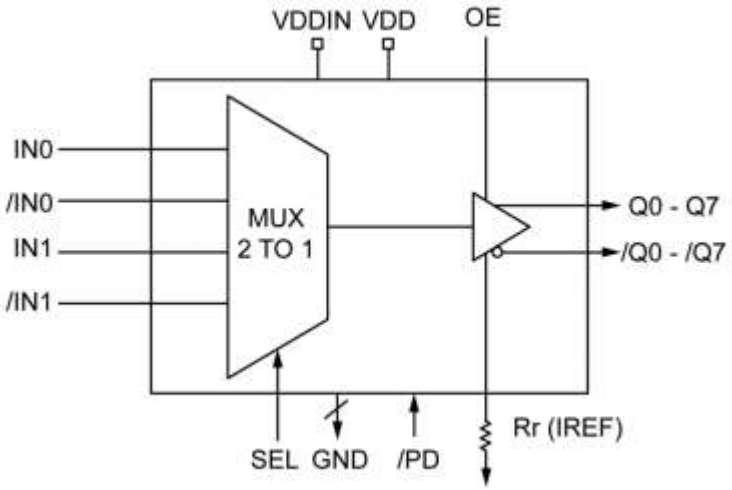

<< BACK

SY89837U

Precision 1:8 LVPECL Fanout Buffer with 2:1 Runt Pulse Eliminator MUX

Online Datasheet

Features:

- Selects between two clocks, and provides 8 –
  - precision, low skew LVPECL output copies
- Guaranteed AC performance over temperature –
  - and supply voltage:
- Wide operating frequency: 1kHz to >1.5GHz
  - <975ps in-to-out tpd
  - <180ps tr/tf
  - <40ps output-to-output skew
- Unique input isolation design minimizes crosstalk
- Ultra-low jitter design:
  - 150fs RMS phase jitter
  - <0.7psRMS MUX crosstalk-induced jitter
- Unique input termination and VTpin accepts DC –
  - or AC-coupled inputs (CML, PECL, LVDS)
- 800mV LVPECL output swing
- Power supply +2.5V ±5% or +3.3V ±10%
- Industrial temperature range:-40°C to +85°C
- Available in 32-pin (5mm x 5mm) QFN package

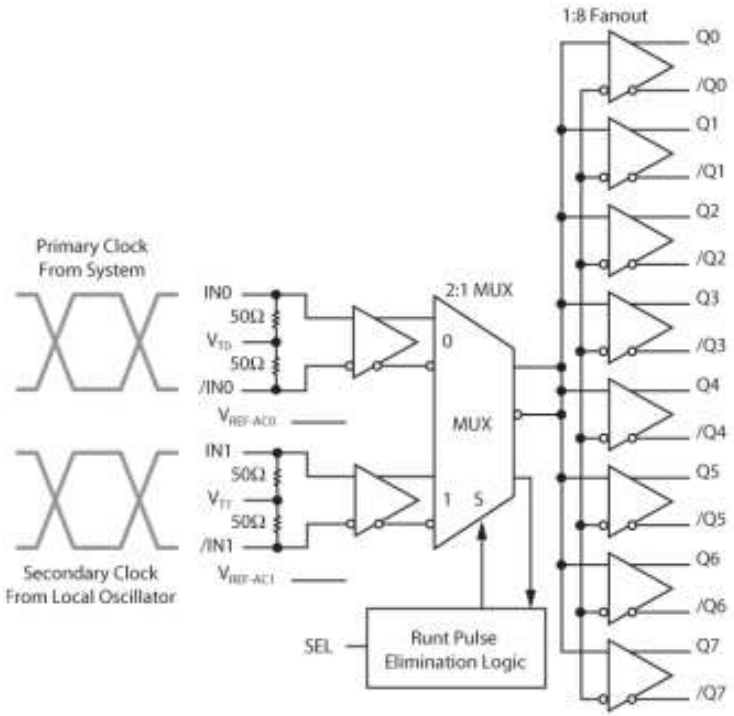

<< BACK

SY89858U

Precision Low Power 1:8 LVPECL Fanout Buffer

Online Datasheet

Features:

- Precision 1:8, LVPECL fanout buffer
- Low power: 238mW (2.5V)
- Guaranteed AC performance over temperature -
  - and supply voltage:
    - Wide operating frequency: DC to 2.0GHz
    - <380ps In-to-Out tpd
    - <200ps tr/tf
    - <30ps skew
- Ultra-low jitter design:
    - 710fsRMS phase jitter (typ.)
- 100k LVPECL compatible outputs
- Fully differential inputs/outputs
- Accepts an input signal as low as 100mV –
  - (200mVpp)
- Unique input termination and VT pin accepts -
  - DC-coupled and AC-coupled differential inputs -
  - (LVPECL, LVDS, and CML)
- Power supply 2.5V ±5% or 3.3V ±10%
- Industrial temperature range:-40°C to +85°C
- Available in 32-pin (5mm x 5mm) QFN package

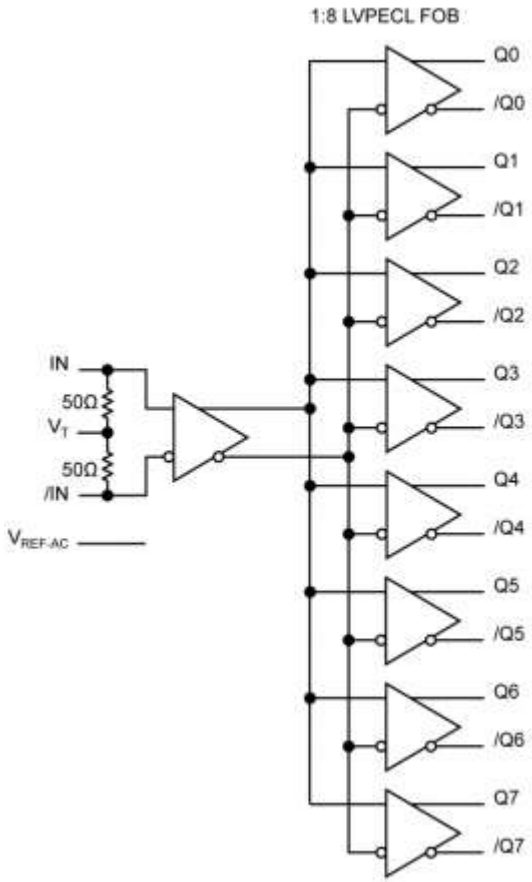

<< BACK

PL133-97

Low-Power DC to 150MHz 1:9 Fanout Buffer IC

Online Datasheet

Features:

- 1:9 LVCMOS output fanout buffer for DC to 150MHz
- 8mA Output Drive Strength
- Low power consumption for portable applications
- Low input-output delay
- Output-Output skew: <250ps
- Low Additive Phase Jitter: 60fs RMS
- 2.5V to 3.3V ±10% operation
- Industrial temperature range: -40°C to 85°C
- Available in 16-Pin QFN package

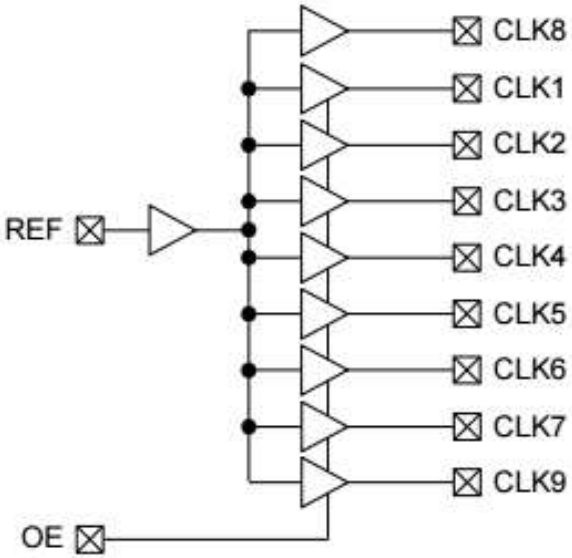

<< BACK

SY89809AL

3.3V LVPECL/HSTL to HSTL 1:9 High Performance Clock Driver

Online Datasheet

Features:

- 3.3V core supply, 1.8V output supply for –
  - reduced power
- LVPECL and HSTL inputs
- Nine differential HSTL (low-voltage swing) –
  - output pairs
- HSTL outputs drive 50Ω-to-ground with no –
  - offset voltage
- 750MHz maximum clock frequency
- Low part-to-part skew (100ps typical)
- Low pin-to-pin skew (15ps typical)
- Available in 32-pin TQFP

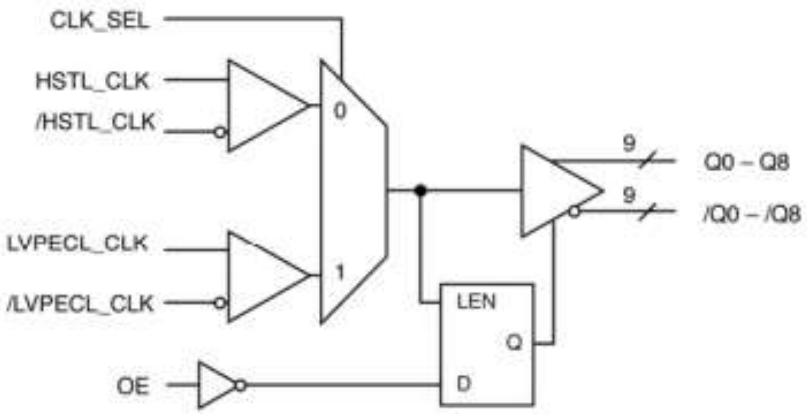

<< BACK

SY100EP111U

2.5V/3.3V to 1.10 Differential LVPECL/LVECL/HSTL Clock Driver

Online Datasheet

Features:

- 2.5V and 3.3V power supply options
- Guaranteed AC parameters over temperature:
  - fMAX = 3GHz
  - <25ps output-to-output skew
  - <250ps tr/tf
  - <400ps propagation delay
- Industrial temperature range: –40°C to +85°C
- Differential design
- VBB output for single-ended input applications
- Fully compatible with industry standard 100K – - I/O levels
- Available in 32-pin TQFP package

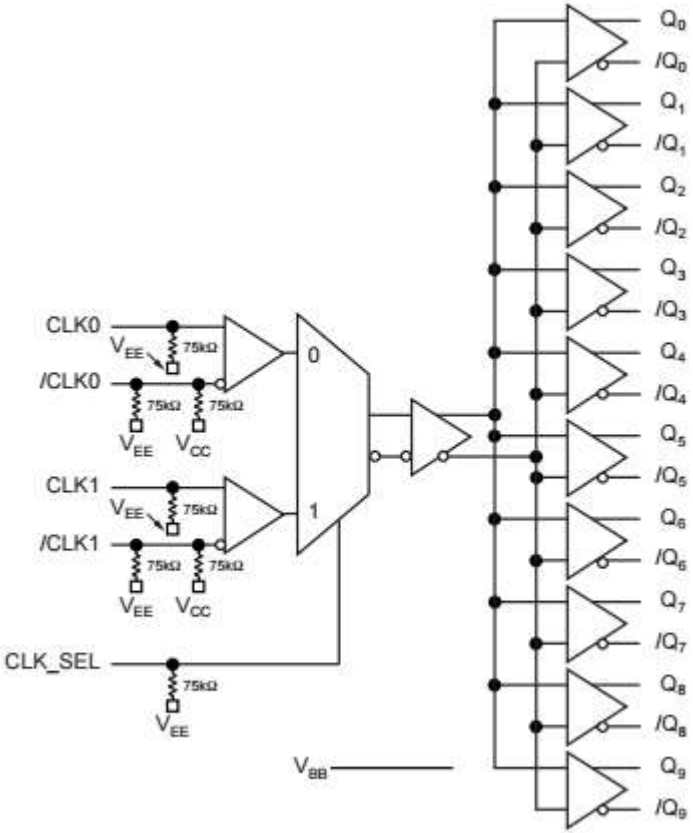

<< BACK

SY89464U

Precision LVPECL 1:10 Fanout with 2:1 Runt Pulse Eliminator MUX

Online Datasheet

Features:

- Selects between two sources, and provides 10 LVPECL copies
- AC performance:
  - Wide operating frequency: 1kHz to >1.5GHz
  - <1100ps In-to-Out tpd
  - <220ps tr/tf
- Unique MUX isolation minimizes adjacent crosstalk
- Fail-Safe Input prevents oscillations
- Ultra-low jitter design:
  - <1psRMS random jitter
  - <1psRMS cycle-to-cycle jitter
  - <10psPP total jitter (clock)
  - <0.7psRMS MUX crosstalk induced jitter
- Unique patented internal termination and VT pin accepts DC –
  - and AC-coupled inputs (CML, PECL, - LVDS)
- 800mV LVPECL output
- 2.5V ±5% or 3.3V ±10% supply voltage
- Industrial temperature range: -40°C to +85°C
- 44-pin (7mm x 7mm) QFN package

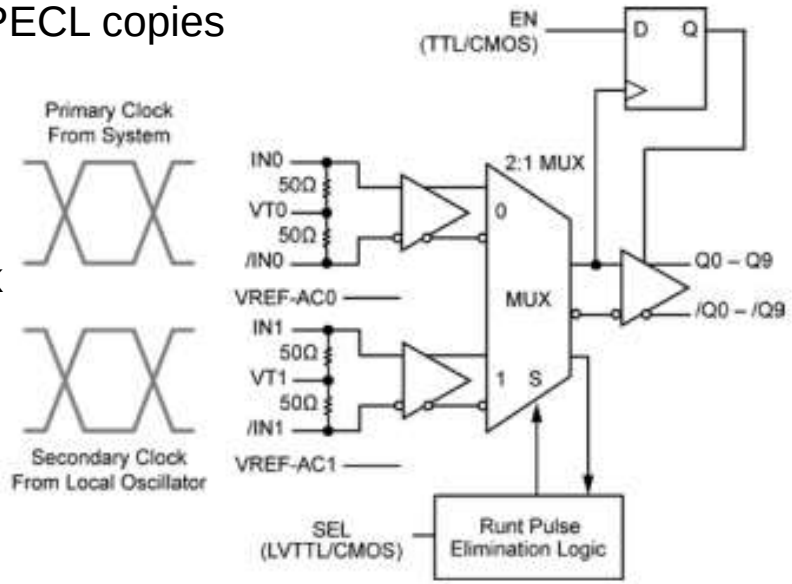

<< BACK

SY89465U

Precision LVDS 1:10 Fanout with 2:1 Runt

Online Datasheet

Features:

- Selects between two sources, and provides 10 LVDS copies
- AC performance:
  - Wide operating frequency: 1kHz to >1.5GHz
  - <1200ps In-to-Out tpd
  - <220ps tr/tf
- Unique input isolation minimizes adjacent -
  - channel crosstalk
- Fail-Safe Input prevents oscillations
- Ultra-low jitter design:
  - 183fsRMS phase jitter (typical)
  - <0.7psRMS MUX crosstalk-induced jitter
- Unique input termination and VT pin accepts DC and AC-coupled –
  - inputs (CML, PECL, LVDS)
- 325mV LVDS output swing
- 2.5V ±5% supply voltage
- Industrial temperature range: −40°C to +85°C Output enable
- Available in 44-pin (7mm x 7mm) QFN package

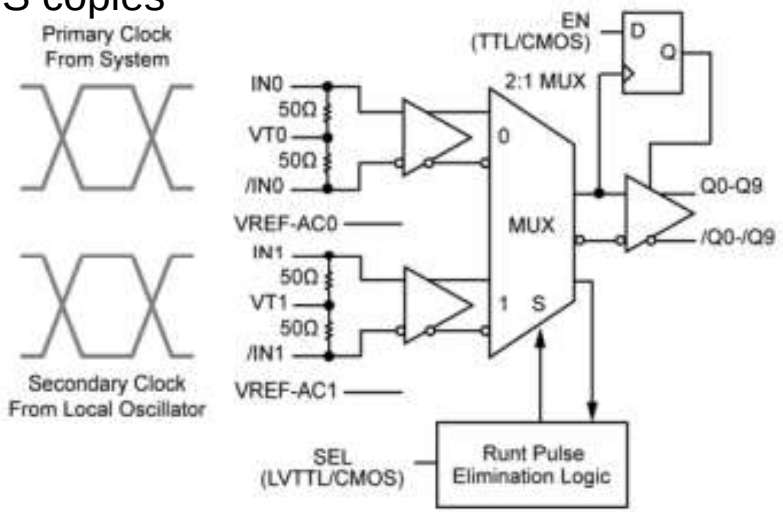

<< BACK

SY89828L

1GHz Dual 1:10 LVDS Fanout Buffer/Translator with 2:1 Input MUX

Online Datasheet

Features:

- High-performance dual 1:10, 1GHz LVDS – - fanout buffer/translator
- Two banks of 10 differential LVDS outputs
- AC parameters:
  - >1GHz fMAX
  - <50ps within device skew
  - <400ps tr/tf time
- Each bank includes a 2:1 input mux
- 2:1 mux input accepts LVDS and LVPECL
- Low jitter performance
  - <1psRMS cycle-to-cycle jitter
  - <1psPP total jitter
- 3.3V supply voltage
- Output enable function
- LVDS input includes internal 100Ω termination
- Available in a 64-Pin EPAD-TQFP

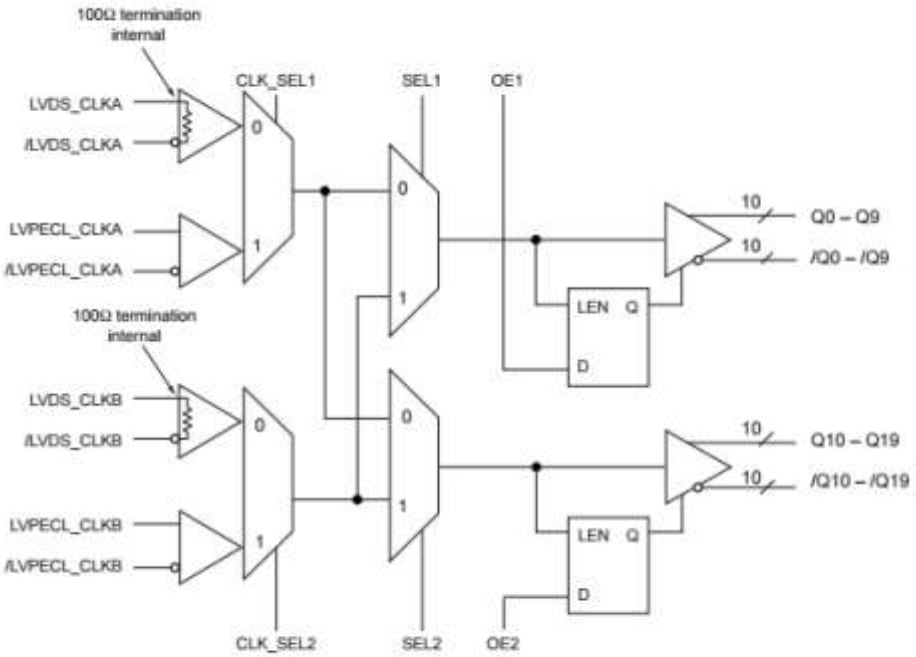

<< BACK

SY89829U

Dual 1:10 or LVPECL Clock Driver with Redundant Switchover

Online Datasheet

Features:

- Dual 1:10 fanout buffer/translator
- Accepts LVPECL or LVDS inputs
- Multiplexed inputs ideal for redundant –
  - clock switchover
- AC parameters:
  - >2GHz fMAX (toggle)
  - <50ps ch-ch skew
- LVDS input includes 100Ω internal termination
- Low supply voltage: 2.5V, 3.3V
- Industrial temperature range:
  - -40°C to +85°C
- Output enable (OE) pin
- Available in 64 EPAD-TQFP

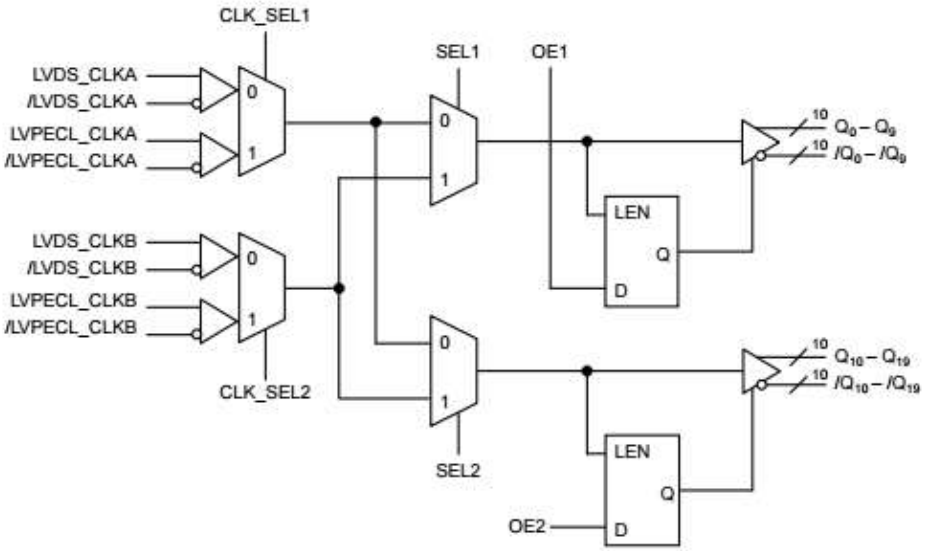

Logic Symbol

<< BACK

SY89112U

Low-Jitter, Low-Skew 1:12 LVPECL Fanout Buffer with 2:1 Input MUX

Online Datasheet

Features:

- Selects between 1 of 2 inputs, and provides 12 –
  - precision, low skew LVPECL output copies
- AC performance:
  - DC to >2GHz throughput:
  - <550ps propagation delay CLK-to-Q
  - <220ps rise/fall time
  - <25ps output-to-output skew
- Ultra-low jitter design:
  - 50fsRMS phase jitter (typ.)
  - <0.7psRMS crosstalk induced jitter
- Unique input termination and VT pin accepts DC –
  - coupled and AC-coupled differential inputs
- Unique 2:1 input MUX provides superior isolation to -
  - minimize channel-to-channel crosstalk
- 800mV, 100K LVPECL output swing
- Power supply 2.5V +5% or 3.3V +10%
- Industrial temperature range -40°C to +85°C
- Available in 44-pin (7mm x 7mm) QFN package

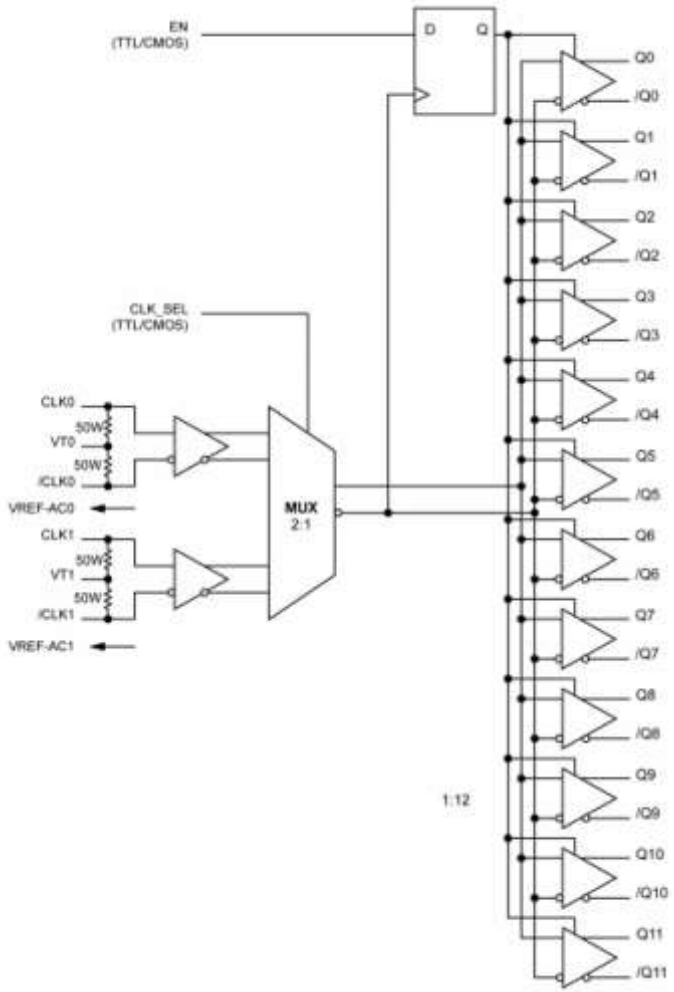

<< BACK

SY89113U

2Low Jitter, Low Skew 1:12 LVDS Fanout Buffer with 2:1 Input MUX

Online Datasheet

Features:

- Selects between 2 inputs & provides 12 LVDS copies
- AC performance:
  - DC to >1GHz throughput
  - <975ps propagation delay CLK0-to-Q
  - <250ps rise/fall time
  - <25ps output-to-output skew
- Ultra-low jitter design:
  - 130fsRMS phase jitter (typ.)
  - 0.7psRMS crosstalk-induced jitter
- Unique 2:1 input MUX provides minimizes crosstalk
- CLK0 input features a unique input termination
  - VT pin that accepts AC- and DC-coupled inputs

CLK1 accepts virtually any logic standard:

  - Single-ended: TTL/CMOS, LVPECL
  - Differential: LVPECL, LVDS, CML, HSTL
- 325mV LVDS-compatible output swing
- Power supply: 2.5V ±5%
- Industrial temperature range -40°C to +85°C
- 44-pin (7mm x 7mm) QFN package

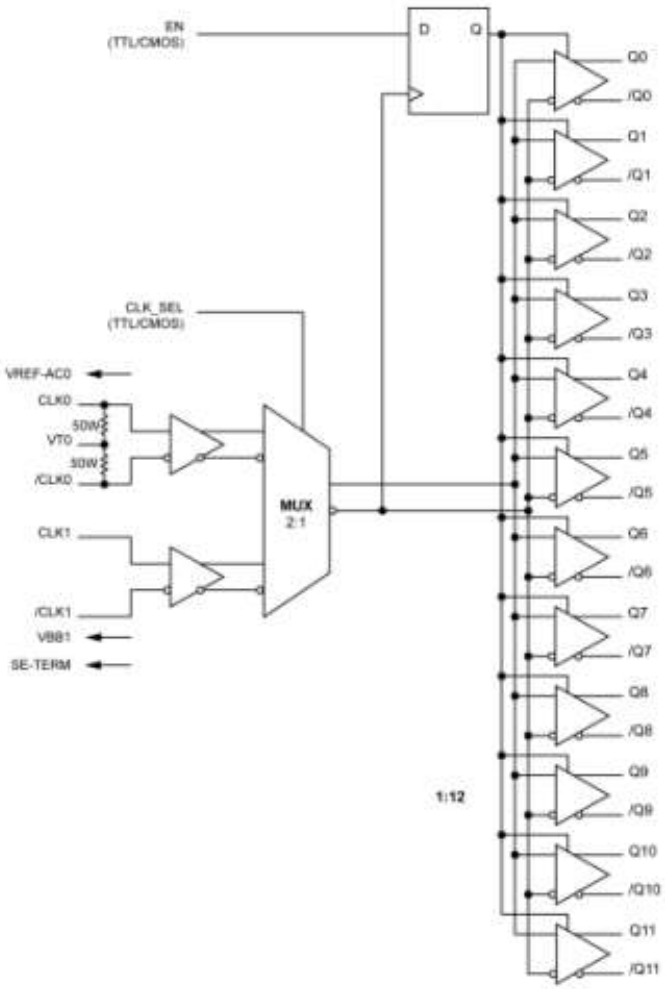

<< BACK

SY898530U

500MHz 1:16 3.3V-to-2.5V/3.3V LVPECL Fanout Buffer

Online Datasheet

Features:

- 16 Differential 2.5V LVPECL outputs
- Differential CLK inputs. Accepts LVDS, LVPECL, -- LVHSTL, SSTL, HCSL logic levels
- Translates any single-ended input signal to 2.5V -- LVPECL levels with a resistor bias on /CLK input
- 500MHz maximum output frequency
- <50ps output skew
- <250ps part-to-part skew
- <2ns propagation delay
- 3.3V Core, 2.5V output operating supply
- Commercial temperature range: 0°C to +70°C
- Available in 48-pin TQFP package
- Pin-to-pin compatible with ICS8530

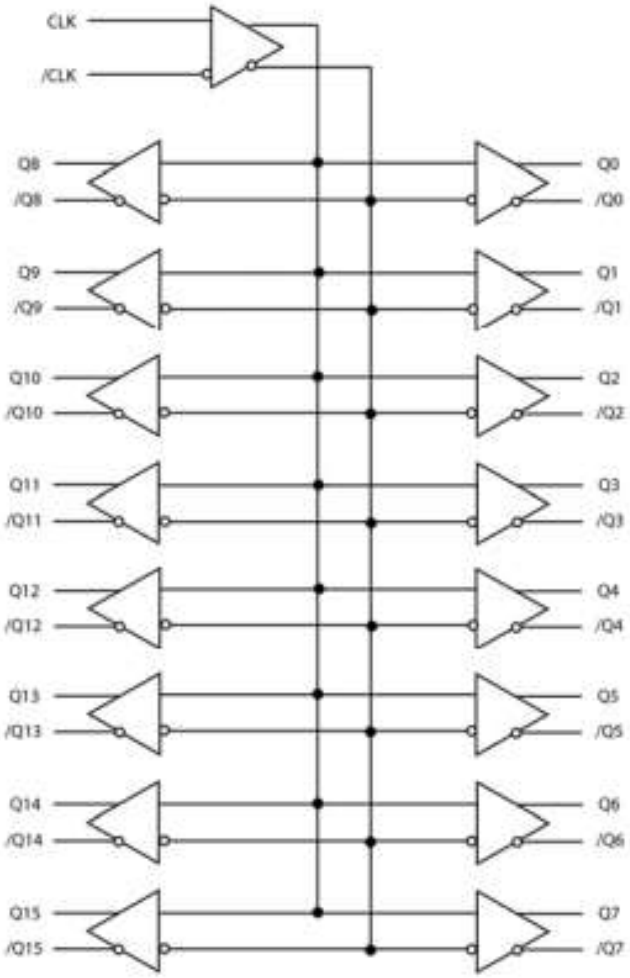

<< BACK

SY89467U

Precision LVPECL 1:20 Fanout with 2:1 MUX with Fail-Safe Input

Online Datasheet

Features:

- Selects between two inputs & provides 20 LVPECL copies
- Fail-Safe Input:
  - Prevents outputs from oscillating with invalid input
- AC performance:
  - DC-to >1.5 GHz throughput
  - <1200ps Propagation Delay (In-to-Q)
  - 270ps Rise/Fall times
- Ultra-low jitter design:
  - <1psRMS random jitter
  - <1psRMS cycle-to-cycle jitter
  - <10psPP total jitter (clock)
  - <0.7psRMS MUX crosstalk induced jitter
- Unique MUX input design minimizes crosstalk
- Unique internal termination and VT pin accepts DC and AC –
  - coupled inputs (CML, PECL, LVDS)
- Wide input voltage range: VCC to GND
- 2.5V ±5% or 3.3V ±10% supply voltage
- Industrial temperature range -40°C to +85°C
- 64-pin TQFP package

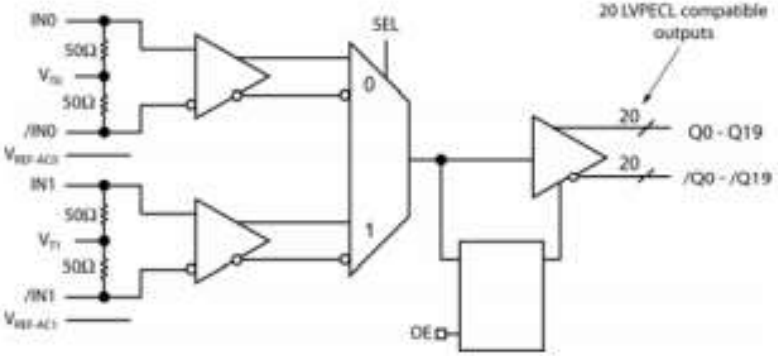

<< BACK

SY89468U

Precision LVDS 1:20 Fanout with 2:1 MUX with Fail-Safe Input

Online Datasheet

Features:

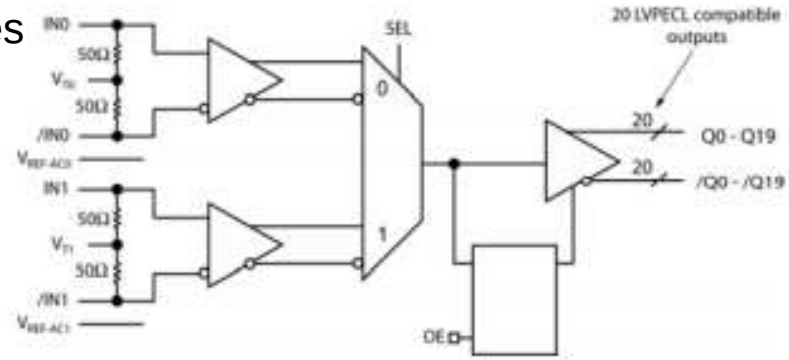

- Selects between 2 inputs & provides 20 LVDS copies
- Fail-Safe Input:
  - Prevents outputs oscillation with invalid inputs
- AC performance:
  - DC to >1.5GHz throughput
  - <1200ps Propagation Delay (In-to-Q)
  - <270ps Rise/Fall times
- Ultra-low jitter design:
  - <1psRMS random jitter
  - <1psRMS cycle-to-cycle jitter
  - <10psPP total jitter (clock)
  - <0.7psRMS MUX crosstalk induced jitter
- Unique MUX input isolation design minimizes adjacent channel crosstalk -
- Unique internal termination and VT pin accepts DC and AC-coupled inputs - (CML, PECL, LVDS)
- Wide input voltage range VCC to GND
- 2.5V ±5% supply voltage
- Industrial temperature range: -40°C to +85°C
- Available in 64-pin EPAD-TQFP package

<< BACK

SY89825U

1:22 Low-Voltage PECL Bus Clock Driver & Translator

Online Datasheet

Features:

- LVPECL or LVDS input to 22 LVPECL outputs
- 100K ECL compatible outputs
- LVDS input includes 100Ω termination
- Guaranteed AC parameters over voltage:
  - >2GHz fMAX (toggle)
- <35ps max. ch-ch skew
- Low voltage operation: 2.5V, 3.3V
- Industrial temperature range: -40°C to +85°C
- Output enable pin
- Available in a 64-Pin EPAD-TQFP

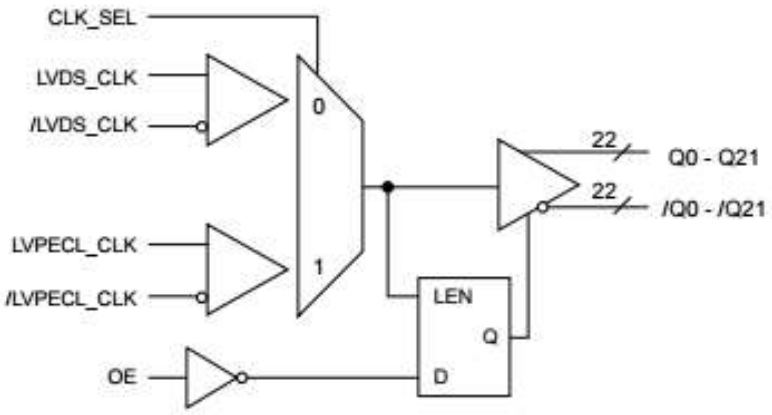

Logic Symbol

<< BACK

SY89826L

1GHz Precision 1:22 LVDS Fanout Buffer/Translator with 2:1 MUX

Online Datasheet

Features:

- High-performance, 1GHz LVDS fanout buffer/ -- translator
- 22 differential LVDS output pairs
- AC parameters:
  - >1GHz fMAX
  - <50ps within device skew
  - <400ps tr/tf time
- Low jitter performance
  - <1psrms cycle-to-cycle jitter
  - <1ps (pk-pk) total jitter
- 2:1 mux input accepts LVDS and LVPECL
- 3.3V supply voltage
- LVDS input includes internal 100Ω termination
- Output enable function
- Available in a 64-Pin EPAD-TQFP

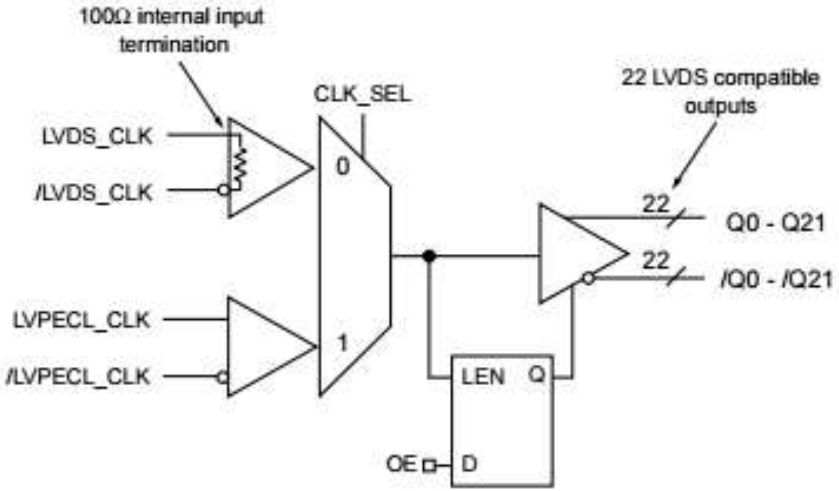

<< BACK

SY100E310L

31.5GHz Differential LVECL/LVPECL Programmable Clock Generator

Online Datasheet

Features:

- AC performance:
  - >800MHz fMAX (typical)
  - <50ps within-device skew
- 15 differential LVPECL outputs
- Low voltage operation:
  - LVPECL: +3.3V ±10%
  - LVECL: –3.3V ±10%
- Internal 75kΩ pull-down resistors
- Industrial temperature range: –40°C to +85°C -
- Pin-for-pin, plug-in replacement for
  - MC100LVE310
- Available in 28-pin PLCC package

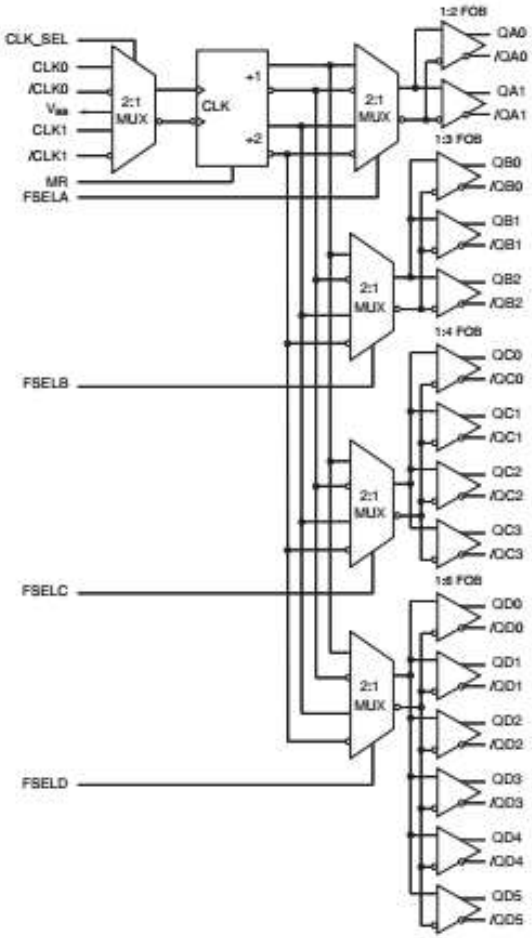

<< BACK

PL102-10

High Performance, Low Skew, Low Jitter Zero Delay Buffer

Online Datasheet

Features:

- Frequency Range:
  - 15 to 170MHz @ 3.3V
  - 15 to 145MHz @ 2.5V
- Internal Phase Locked Loop Allows Spread –
  - Spectrum Modulation on Reference Clock to –
  - Pass to Outputs
- Zero Input to Output Delay
- Less Than 700ps Device to Device Skew
- Less Than 200ps Skew Between Outputs
- Less Than 100ps Cycle to Cycle Jitter
- 2.5V or 3.3V Power Supply
- Available in 8-Pin SOP or 6-pin SOT-23 packages

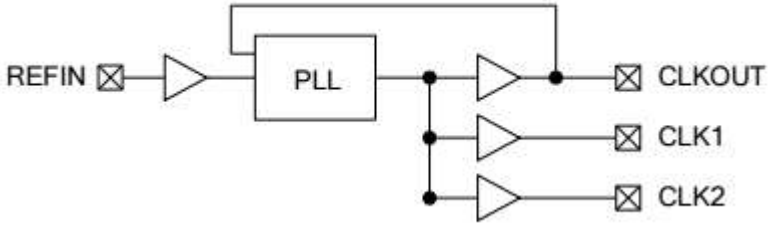

<< BACK

PL123-05/-09

High Performance, Low Skew, Low Jitter Zero Delay Buffer

Online Datasheet

Features:

- Frequency Range” 10MHz to 134MHz
- Output Options:
  - 5 outputs: PL123-05
  - 9 outputs: PL123-09
- Zero input - output delay
- Optional Drive Strength:
- Standard (8mA) PL123-05/-09
- High (12mA) PL123-05H/-09H
- 3.3V ±10% operation
- Temperature ranges:
  - Commercial temperature range: 0°C to +70°C
  - Industrial temperature range: –40°C to +85°C
- PL123-05 available in 8-Pin SOP packages
- PL123-09 available in 16-Pin SOP and TSSOP – - packages

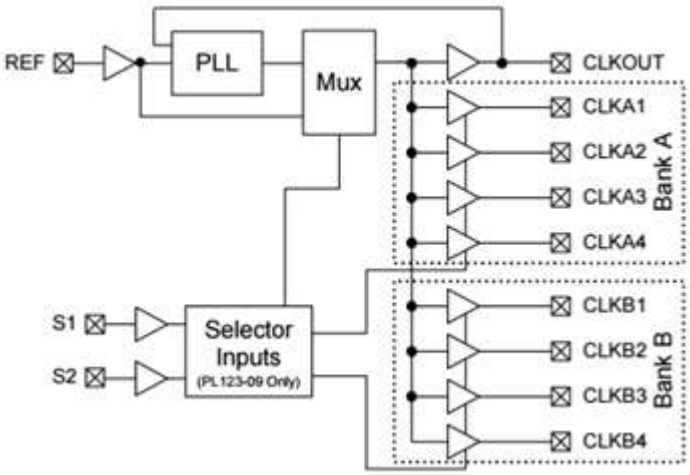

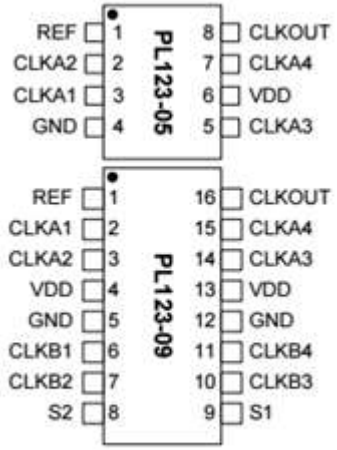

<< BACK

PL123E-05

High Performance, Low Skew, Low Jitter Zero Delay Buffer

Online Datasheet

Features:

- Frequency Range 10MHz to 220MHz
- Zero input - output delay
- Low output-to-output skew
- Optional Drive Strength:
    - Standard (8mA) PL123E-05
    - High (12mA) PL123E-05H
- 2.5V or 3.3V ±10% operation
- Available in 8-pin SOP packaging

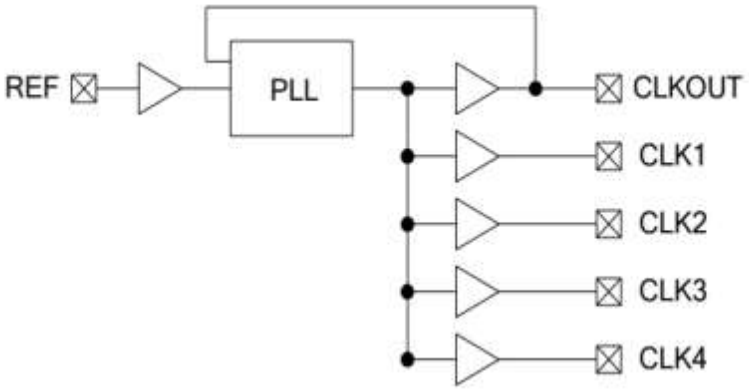

<< BACK

PL123E-09

High Performance, Low Skew, Low Jitter Zero Delay Buffer

Online Datasheet

Features:

- Frequency Range 10MHz to 220MHz
- Zero input - output delay
- Low output-to-output skew
- Optional Drive Strength:
  - Standard (8mA) PL123E-09
  - High (12mA) PL123E-09H
- 2.5V or 3.3V ±10% operation
- Available in 16-Pin SOP and TSSOP packages

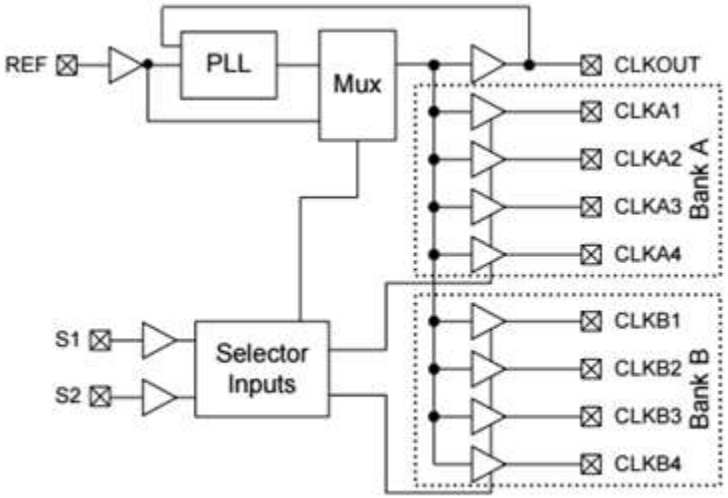

<< BACK

MDB1900Z

Zero Delay Buffer for PCIe

Online Datasheet

Features:

- Supports zero delay (0ps) buffer mode for –
  - 100MHz and 133MHz clock frequencies.
- External feedback path for true zero delay operations
- Zero delay (PLL) mode can filter jitter
- Selectable PLL bandwidth for PLL mode
- Supports fanout buffer mode for clock frequencies -
  - between 0MHz and 250MHz
- Differential input reference with HCSL logic (0V ~ 0.7V)
- Nineteen differential HCSL-compatible clock output pairs
- Eight dedicated OE# pins to control their assigned output:
  - Glitch free assertion/de-assertion.
- Spread spectrum modulation tolerant for EMI reduction
- SMBus interface for controlling output properties
  - Enable/disable and delay tuning
- Disabled outputs in power-down mode for maximum power savings
- Nine selectable SMBus addresses
- 3.3V or 2.5V operation
- Commercial temperature range: 0°C to +70°C
- 72-pin 10mm × 10mm QFN package

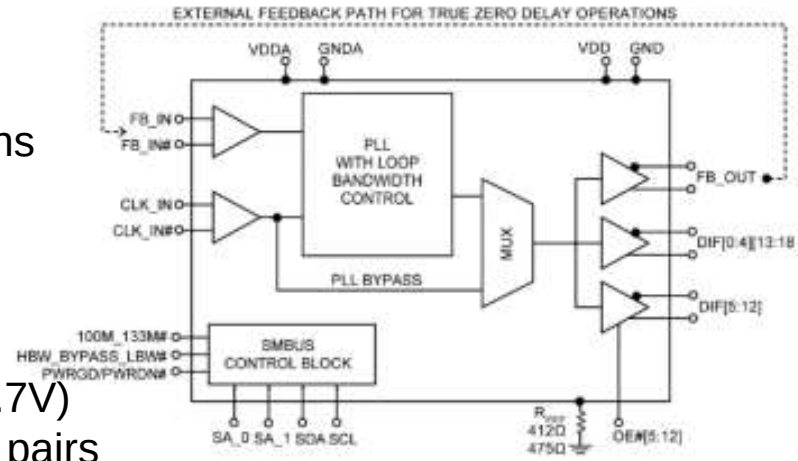

<< BACK

SY75572L

267MHz 1:2 3.3V HCSL/LVDS Fanout Buffer

Online Datasheet

Features:

- Two differential pairs of LVDS or HCSL outputs
- Two pairs of differential inputs accept LVDS or HCSL logic levels
- 267MHz maximum frequency
- Ultra-low phase jitter:
  - 137fsRMS, 200MHz (12kHz–20MHz)
  - 153fsRMS, 156.25MHz (12kHz–20MHz)
  - 212fsRMS, 100MHz (12kHz–20MHz)
  - <2ps total jitter (peak-to-peak), 200MHz (BER = 10-12)
- 50ps output-to-output skew
- 3.3V ±5% power supply operation
- Industrial temperature rage: -40°C to +85°C
- 16-pin (3mm × 3mm) QFN package

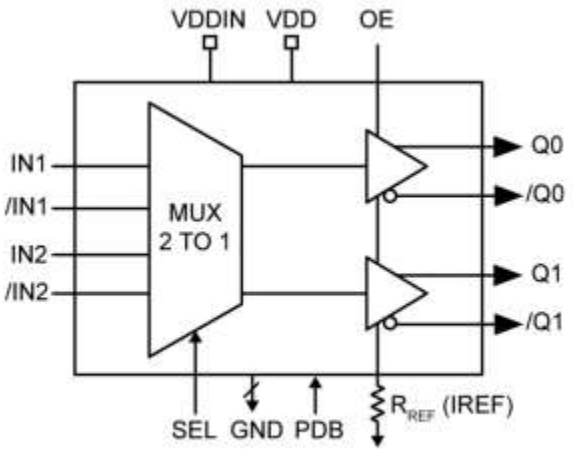

<< BACK

SY75576L

267MHz 1:4 3.3V HCSL/LVDS Fanout Buffer

Online Datasheet

Features:

- Four differential pairs of LVDS or HCSL outputs
- Two pairs of differential inputs accept LVDS or -- HCSL logic levels
- 267MHz max HCSL frequency
- 100MHz max LVDS frequency
- Ultra-low phase jitter:
  - 137fsrms, 200MHz (12kHz–20MHz)
  - 153fsrms, 156.25MHz (12kHz–20MHz)
  - 212fsrms, 100MHz (12kHz–20MHz)
- <2ps Total_Jitterpk-pk, 200MHz(BER = 10^{-12})
- 50ps output-to-output skew
- 3.3V ±5% power supply operation
- Industrial temperature range: -40°C to +85°C
- 20-pin TSSOP package

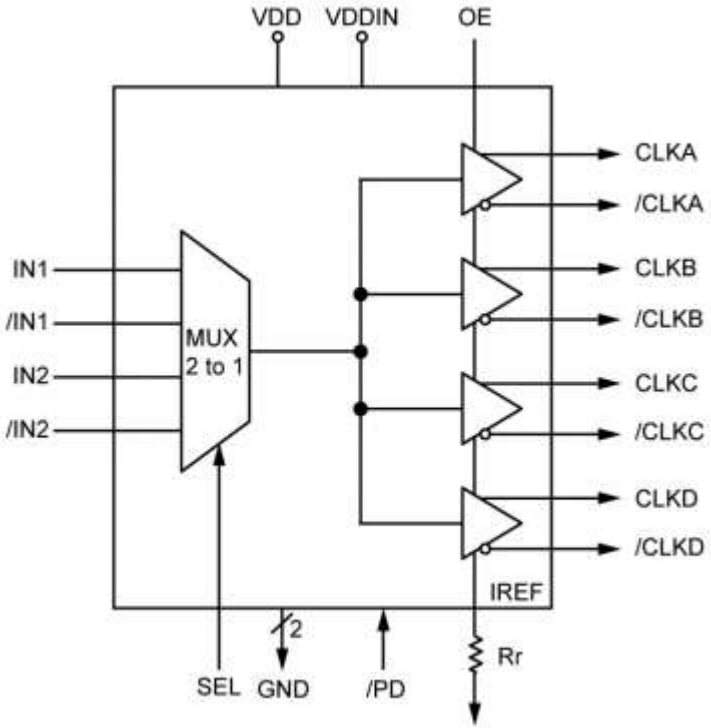

<< BACK

SY75578L

PCIe Fanout Buffer 267MHz, 8 HCSL Outputs with MUX

Online Datasheet

Features:

- Eight differential pairs of HCSL outputs
- Two pairs of differential inputs accept LVDS or -- HCSL logic levels
- 267MHz max frequency
- Ultra low phase jitter:
  - 130fsrms, 200MHz (12kHz–20MHz)
- <100ps output-to-output skew
- 3.3V ±5% power supply operation
- Industrial operating temperature: -40°C to +85°C
- Available in 32-pin QFN package

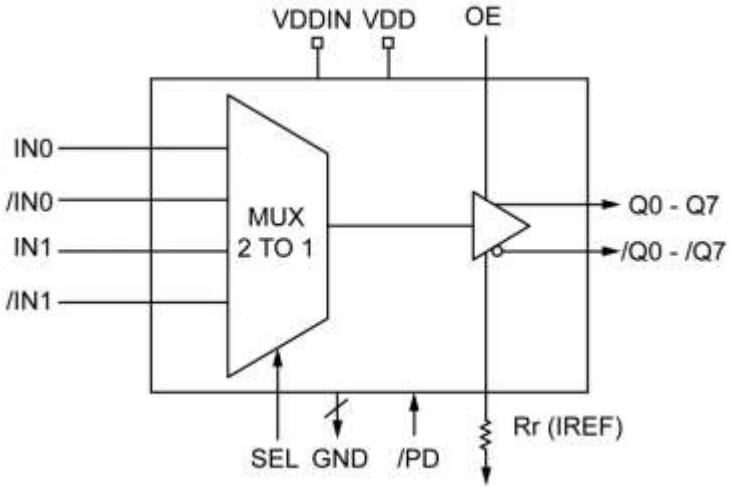

<< BACK

SY89251V

Enhanced Differential Receiver

Online Datasheet

Features:

- 3.3V and 5V power supply options
- 250ps propagation delay
- Ideal for pulse amplifier and limiting amplifier –
  - applications
- Data synchronous enable/disable (EN) on QHG -
  - and QHG provides for complete glitchless gating -
  - of the outputs
- Ideal for gating timing signals
- Complete solution for high quality, high frequency -
  - crystal oscillator applications
- Available in an ultra-small 8-pin (2mm x 2mm) DFN package

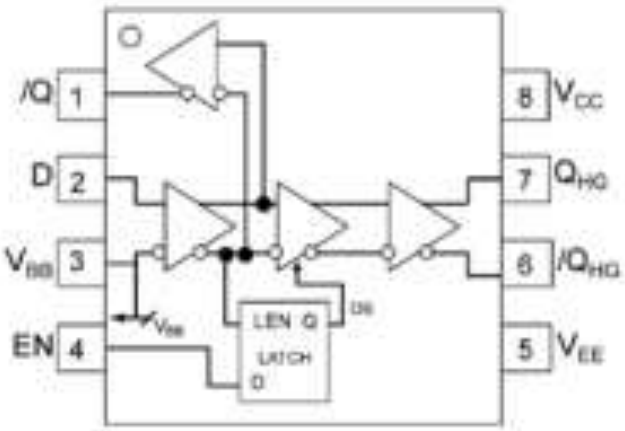

<< BACK

SY89850U

Precision Low-Power LVPECL Line Driver/Receiver

Online Datasheet

Features:

- Guaranteed AC performance over temperature -- and supply voltage:
- DC-to >3.2Gbps data rate throughput:
  - 4GHz clock fMAX (typ.)
  - <280ps In-to-Out tpd
  - <160ps tr/tf
  - Low power: 50mW (2.5V typ.)
- Ultra-low jitter design:
  - <1psRMS random jitter
  - <10psPP deterministic jitter
  - <10psPP total jitter (clock)
- Unique input termination and VTpin accepts DC -- and AC-coupled inputs (CML, PECL, LVDS)
- Typical 800mV (100k) LVPECL Output Swing
- Power supply 2.5V ±5% or 3.3V ±10%
- Industrial temperature range: -40°C to +85°C
- Available in ultra-small (2mm x 2mm) 8-pin DFN package

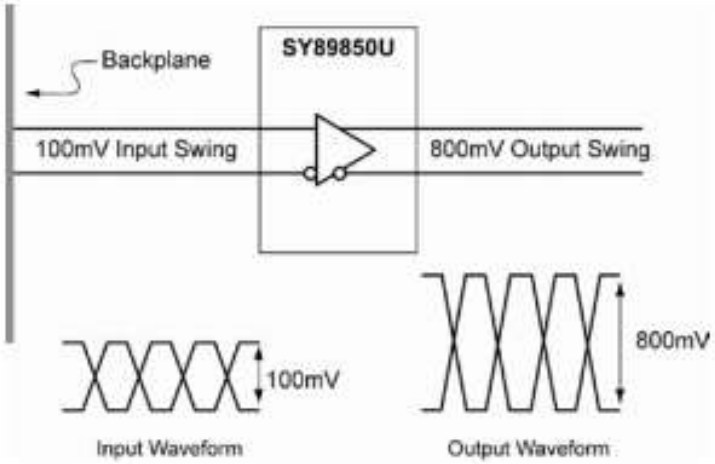

<< BACK

SY10EP89

5V/3.3V 3GHz Coaxial Cable Driver

Online Datasheet

Features:

- 3.3V and 5V power supply options
- 3.0GHz typical toggle frequency
- 310ps typical propagation delay
- 1.6V (5V) and 1.4V (3.3V) swing
- Internal input resistors: pulldown on D, pulldown -
  - and pullup on /D
- New differential input common mode range
- Available in 8-pin MSOP and SOIC packages

<< BACK

SY100EL16V

5V/3.3V Differential Receiver

Online Datasheet

Features:

- 3.3V and 5V power supply options
- 250ps propagation delay
- High bandwidth output transitions
- Internal 75KΩ input pull-down resistors
- Replaces SY10/100EL16
- Improved output waveform characteristics
- Available in 8-pin MSOP and SOIC package

<< BACK

SY100EL17

5V, 3.3V Quad Differential Receiver

Online Datasheet

Features:

- 3.3V and 5V power supply options
- High bandwidth output transitions
- Internal 75KΩ input pull down resistors
- Available in 20-pin SOIC package

<< BACK

SY58016L

3.3V, 10Gbps Differential CML Line Driver/Receiver

Online Datasheet

Features:

- Accepts up to 10.7Gbps data
- <45ps edge rate
- Gain ≥ 4V/V
- CML/PECL differential inputs
- CML outputs
- Internal 50Ω input termination
- Internal 50Ω output load resistors
- Available in 16-pin (3mm x 3mm) MLF® package or die

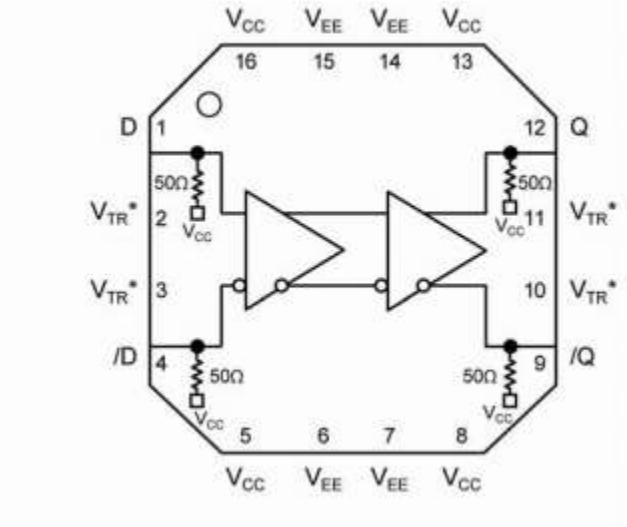

<< BACK

MIC3205

High-Brightness LED Driver Controller w/ Hysteretic Control

Online Datasheet

Features:

- 4.5V to 40V input voltage range
- Fixed operating frequency over input voltage range
- High efficiency (>90%)
- ±5% LED current accuracy
- High-side current sense
- Dedicated dimming control input
- Hysteretic control (no compensation required)
- Up to 1.5MHz switching frequency
- Adjustable constant LED current
- Over-temperature protection
- -40ºC to +125ºC junction temperature range

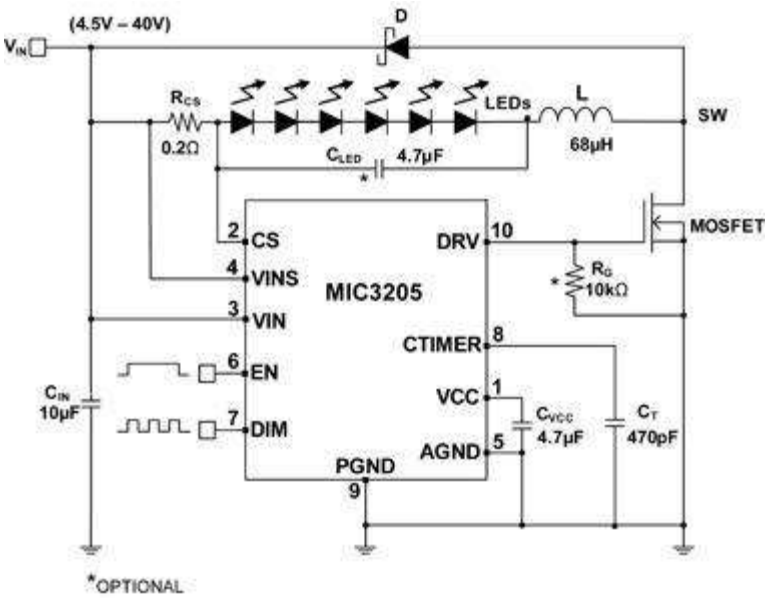

<< BACK

MIC4812

6-Ch Linear WLED Driver with DAM™ & Ultra Fast PWM™ Control

Online Datasheet

Features:

- High efficiency (no voltage boost losses)
- Ultra Fast PWM™ control (200Hz to 500kHz)
- Input voltage range: 3.0V to 5.5V
- LED current range up to 100mA per channel
- Programmable LED current with external resistor
- Dropout of 190mV at 100mA
- Matching better than ±1% (typical)
- Current accuracy better than ±1% (typical)
- Maintains proper regulation regardless of how –
  - many channels are utilized
- 10-pin MSOP with ePad package

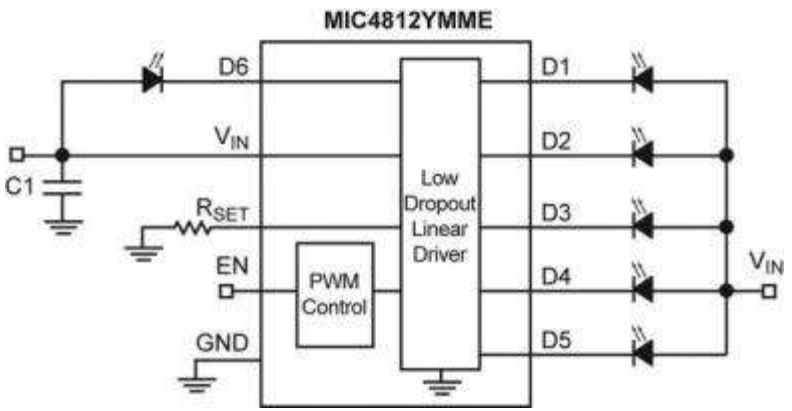

<< BACK

MIC4811

6-Ch Linear WLED Driver with DAM™ & Ultra Fast PWM™ Control

Online Datasheet

Features:

- High efficiency (no voltage boost losses)
- Ultra Fast PWM™ control (200Hz to 500kHz)
- Input voltage range: 3.0V to 5.5V
- LED current range up to 50mA per channel
- Programmable LED current with external resistor
- Dropout of 100mV at 50mA
- Matching better than ±1% (typical)
- Current accuracy better than ±1% (typical)
- Maintains proper regulation regardless of how –
  - many channels are utilized
- 10-pin MSOP package

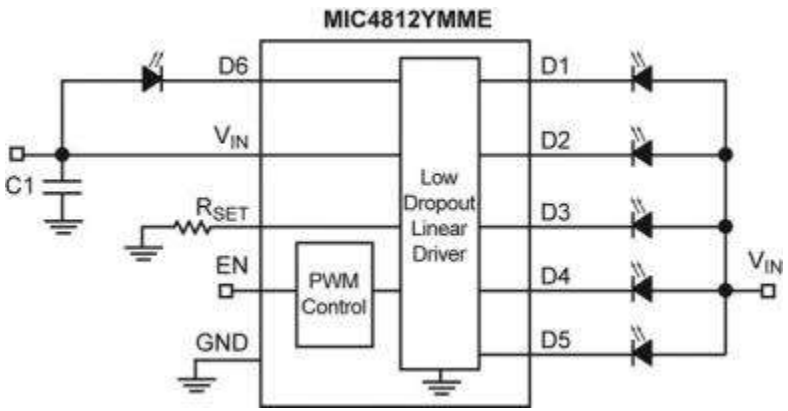

<< BACK

MIC2843/MIC2843A

6-Ch Linear WLED Driver with DAM™ & Ultra Fast PWM™ Control

Online Datasheet

Features:

- High efficiency (no voltage boost losses)
- Dynamic Average Matching™ (DAM™) *
- Ultra Fast PWM™ control (200Hz to 500kHz)
- Input voltage range: 3.0V to 5.5V
- Dropout of 40mV at 20mA
- Matching better than ±3% (typical) - MIC2843
- Matching better than ±1.5% (typical) - MIC2843A
- Current accuracy better than ±1.5% (typical)
- Maintains proper regulation regardless of how -
  - many channels are utilized
- Available in a 10-pin 2mm x 2mm Thin MLF® package

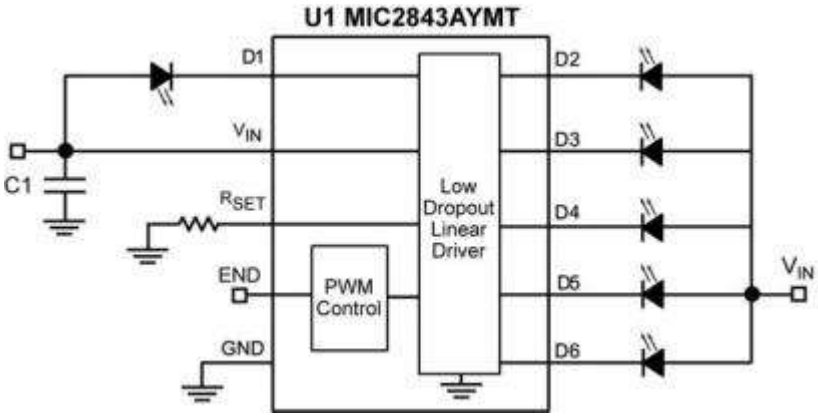

* The MIC2843A features DAM™ which is specifically designed to provide optimum matching across all WLEDs.

<< BACK

MIC2844A

6-Ch WLED Driver with DAM™ & Single Wire Digital Control

Online Datasheet

Features:

- High efficiency (no voltage boost losses)
- Dynamic Average Matching™ (DAM™)
- Single wire digital control
- Input voltage range: 3.0V to 5.5V
- Dropout of 40mV at 20mA
- Matching better than ±1.5% (typical)
- Current accuracy better than ±1.5% (typical)
- Maintains proper regulation regardless of how – many channels are utilized
- Available in a 10-pin 2mm x 2mm Thin MLF® -- package

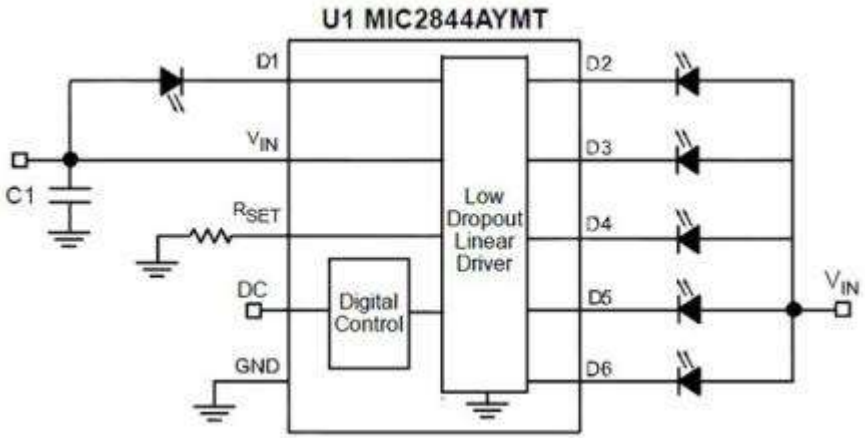

<< BACK

MIC2846A

6-Ch Linear WLED Driver with DAM™ Digital Control & Dual LDOs

Online Datasheet

Features:

- High efficiency (no voltage boost losses)
- Dynamic Average Matching™ (DAM™)
- Single wire digital control
- Input voltage range: 3.0V to 5.5V
- Dropout of 40mV at 20mA
- Matching better than ±1.5% (typical)
- Current accuracy better than ±1.5% (typical)
- Maintains proper regulation regardless of how –
  - many channels are utilized

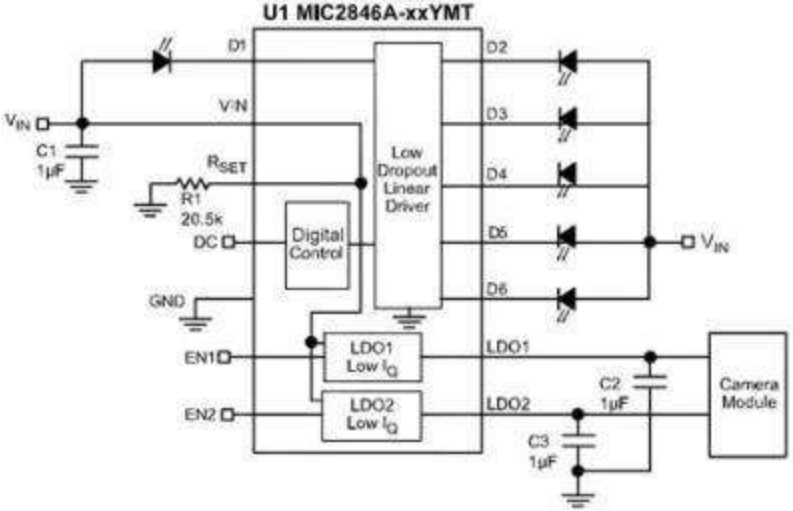

<< BACK

MIC2841A

4-Ch Linear WLED Driver with DAM™ & Ultra Fast PWM™ Control

Online Datasheet

Features:

- High efficiency (no voltage boost losses)
- Dynamic Average Matching™ (DAM™)
- Ultra Fast PWM™ control (200Hz to 500kHz)
- Input voltage range: 3.0V to 5.5V
- Dropout of 40mV at 20mA
- Matching better than ±1.5% (typical)
- Current accuracy better than ±1.5% (typical)
- Maintains proper regulation regardless of how -
  - many channels are utilized
- Available in a 10-pin 2mm x 2mm Thin MLF® package

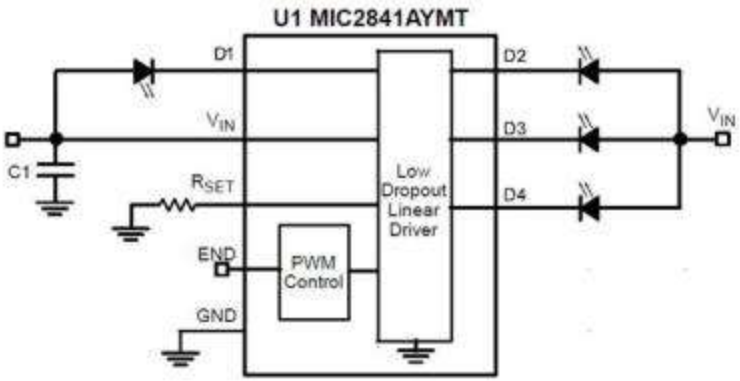

<< BACK

MIC2842A

4-Ch WLED Driver with DAM™ & Single Wire Digital Control

Online Datasheet

Features:

- High efficiency (no voltage boost losses)
- Dynamic Average Matching™ (DAM™)
- Single wire digital control
- Input voltage range: 3.0V to 5.5V
- Dropout of 40mV at 20mA
- Matching better than ±1.5% (typical)
- Current accuracy better than ±1.5% (typical)
- Maintains proper regulation regardless of –
  - how many channels are utilized
- Available in a 10-pin 2mm x 2mm Thin –
  - MLF® package

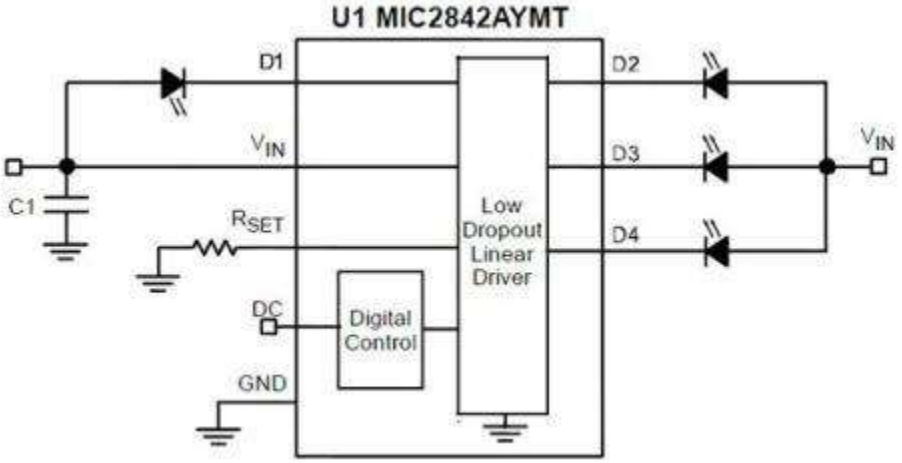

<< BACK

MIC2860-2D

High Efficiency 2-Ch WLED driver with Single Wire Digital Control

Online Datasheet

Features:

- High efficiency (no switching losses)
- No charge pumps
- Two WLED driver channels
- Single wire digital control
- Input voltage range: 3.0V to 5.5V
- WLED driver dropout of 52mV at 30.2mA
- Matching better than ±0.5% (typical)
- Current accuracy better than ±1.0% (typical)
- Available in Thin SOT-23 and SC-70 6-pin –
  - packages

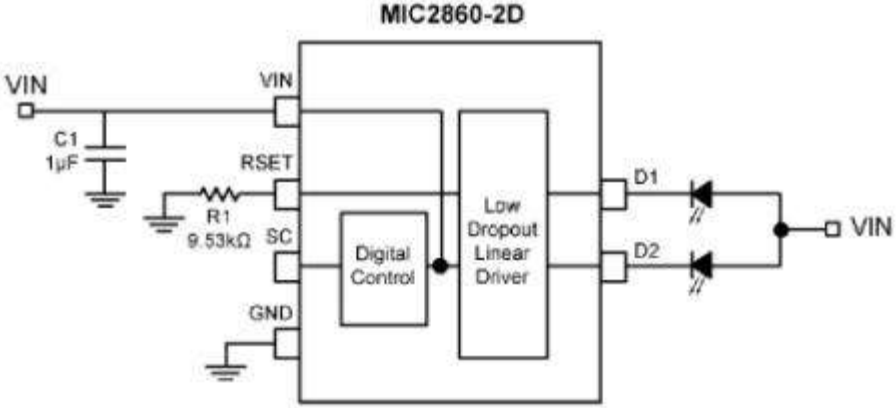

<< BACK

MIC2860-2P

High-Efficiency 2-Ch WLED Driver with PWM Control

Online Datasheet

Features:

- High efficiency (no switching losses)
- PWM frequency as low as 250Hz
- Input voltage range: 3.0V to 5.5V
- Linear driver dropout of 52mV at 30.2mA
- Matching better than ±0.5% (typical)
- Current accuracy better than 1.0% (typical)
- Available in Thin SOT-23 and SC-70 –
  - packages

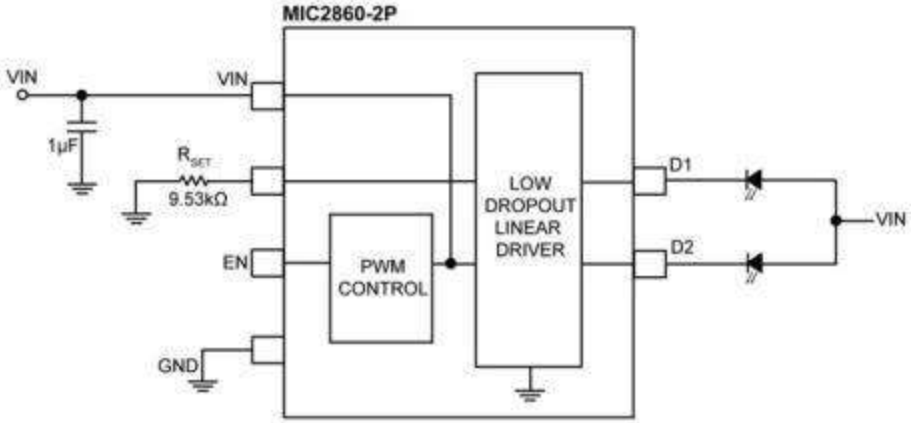

<< BACK

MIC4802

800mA Linear WLED Driver w/ Ultra Fast PWM™ Control

Online Datasheet

Features:

- High efficiency (no voltage boost losses)
- Ultra Fast PWM™ control (200Hz to 500kHz)
- Input voltage range: 3.0V to 5.5V
- Dropout of 280mV at 800mA
- Programmable LED current with external resistor
- Current accuracy of ±1% typical

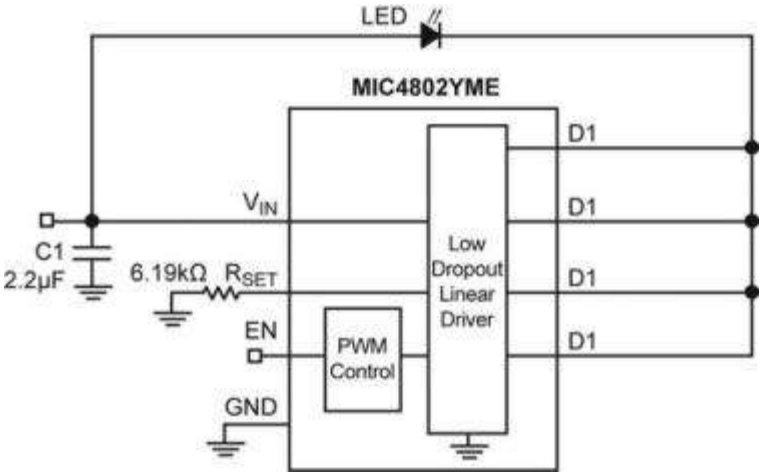

<< BACK

MIC4801

600mA Linear WLED Driver w/ Ultra Fast PWM™ Control

Online Datasheet

Features:

- High efficiency (no voltage boost losses)
- Ultra Fast PWM™ control (200Hz to 500kHz)
- Input voltage range: 3.0V to 5.5V
- Dropout of 130mV at 400mA
- Programmable LED current with external resistor
- Current accuracy of ±1% typical

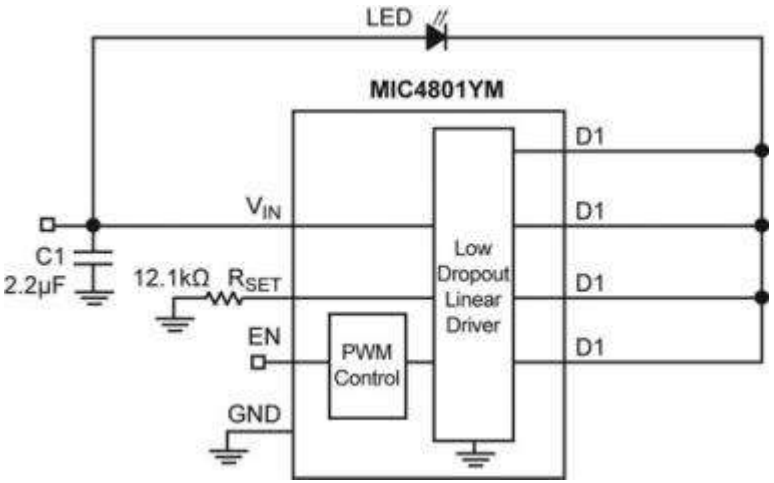

<< BACK

MM5450/1

LED Display Driver

Online Datasheet

Features:

- Continuous brightness control
- Serial data input
- No load signal requirement
- Enable (on MM5450)
- Wide power supply operation
- TTL compatibility
- 34 or 35 outputs, 15mA capability
- Alphanumeric capability

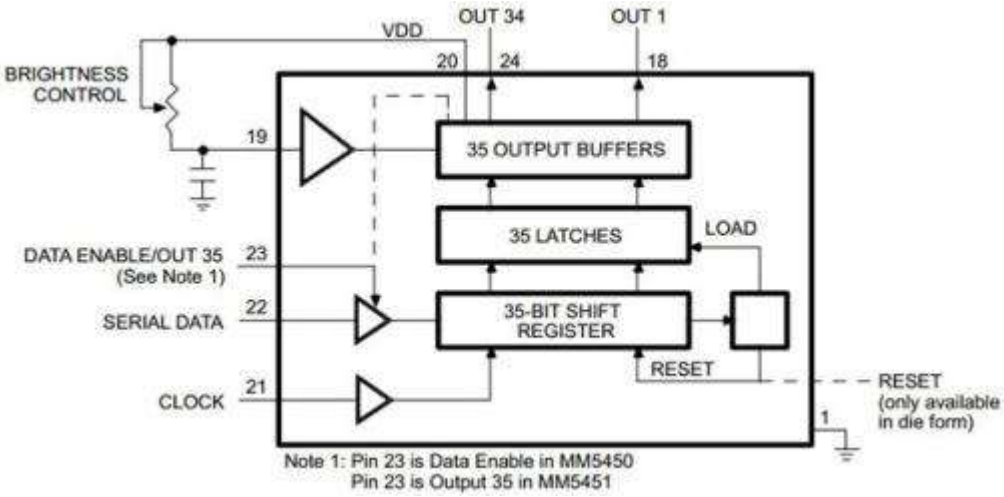

<< BACK

MIC5400

Dual 8-Output 14-Bit LED Video Display Driver

Online Datasheet

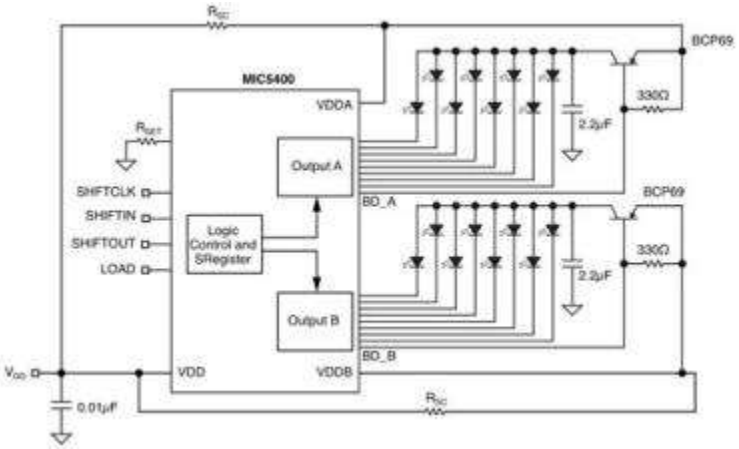

Features:

- Two banks of 8 outputs
- Output characteristics:
- Current sink: 30mA:
  - Programmable brightness control:
    - Coarse: 4-Bit resolution DAC
    - Fine: 10-Bit resolution PWM
  - Resistor sets maximum LED current to -
    - compensate variation in LEDs
  - Current limit on each output
- Full protection:
  - Over temperature shutdown
  - Watchdog disables output under fault condition
  - Power-on Reset [all LEDs off]
  - Soft-start on power up and watchdog recovery
  - Output open fault detection with status register readback
- Output transitions are staggered to minimize supply transients

<< BACK

MIC2874

1.2A High-Brightness Flash LED Driver w/ Single-Wire Interface

Online Datasheet

Features:

- Up to 1.2A flash LED driving current
- Highly efficient synchronous boost driver
- Input voltage range: 2.7V to 5.5V
- True load disconnect
- Configurable safety time-out protection
- Output overvoltage protection (OVP)
- Control through single-wire serial interface or -- external control pin
- LED short detection and protection
- 1µA shutdown current
- Available in 9-bump 1.30mm x 1.30mm WLCSP package

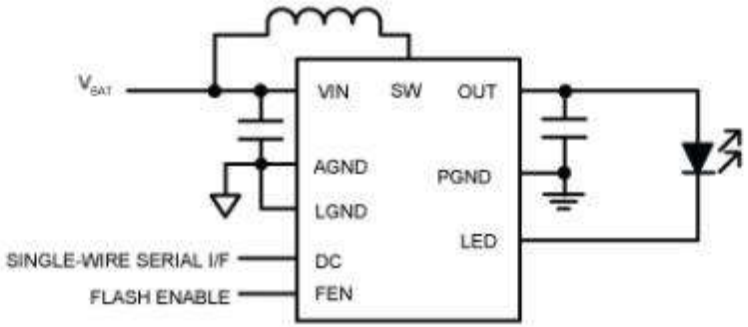

<< BACK

MIC2873

1.2A High-Brightness Flash LED Driver w/ Single-Wire Interface

Online Datasheet

Features:

- Up to 1.2A flash LED driving current
- Highly efficient synchronous boost driver
- Input voltage range: 2.7V to 5.5V
- True load disconnect
- Configurable safety time-out protection
- Output overvoltage protection (OVP)
- LED short detection and protection
- Control through single-wire serial interface or -
  - external control pin
- 1µA shutdown current
- Available in 9-bump 1.30mm x 1.30mm WLCSP package

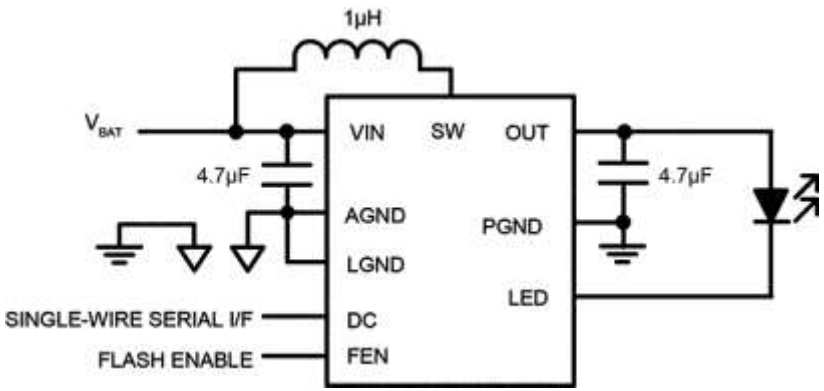

<< BACK

MIC2871

1.2A High-Brightness LED Flash Driver w/ Single-Wire Interface

Online Datasheet

Features:

- Up to 1.2A flash LED driving current
- ±5% LED current accuracy
- Input voltage range: 2.7V to 5.5V
- True load disconnect
- Configurable safety time-out protection
- Output overvoltage protection (OVP)
- Control through single-wire serial interface or -- external control pins
- LED short detection and protection
- Highly efficient, synchronous boost driver (up to 94%)
- 1µA shutdown current
- Available in 14-pin 3mm × 2mm LDFN package

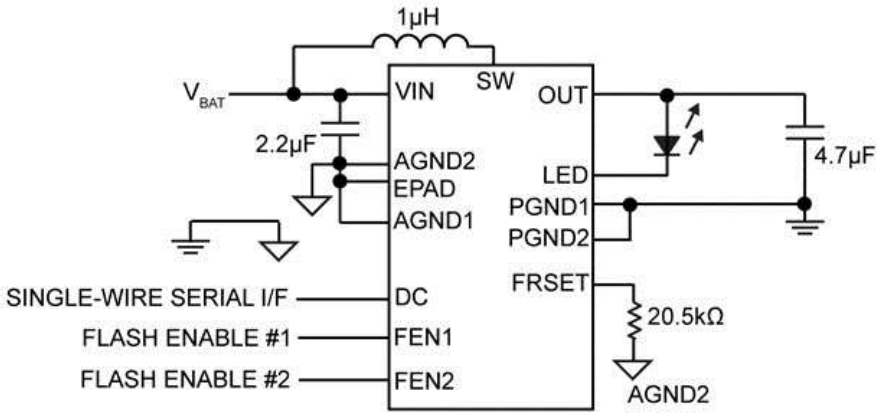

<< BACK

MIC2870

1.5A Synchronous Boost Flash LED Driver w/ I2C Interface

Online Datasheet

Features:

- Up to 1.5A flash LED driving current with a 2.7V -– to 5.0V input voltage range
- High-efficiency 2MHz VF adaptive boost driver
- Configurable 1 or 2 channel(s) WLED driver
- LED driving current soft-start
- Control through I2C interface or external pins
- True load disconnect
- Flash time-out protection
- 1µA shutdown current
- Available in 16-pin 2mm × 2mm TQFN package
- Flash inhibit function for GSM pulse synchronization

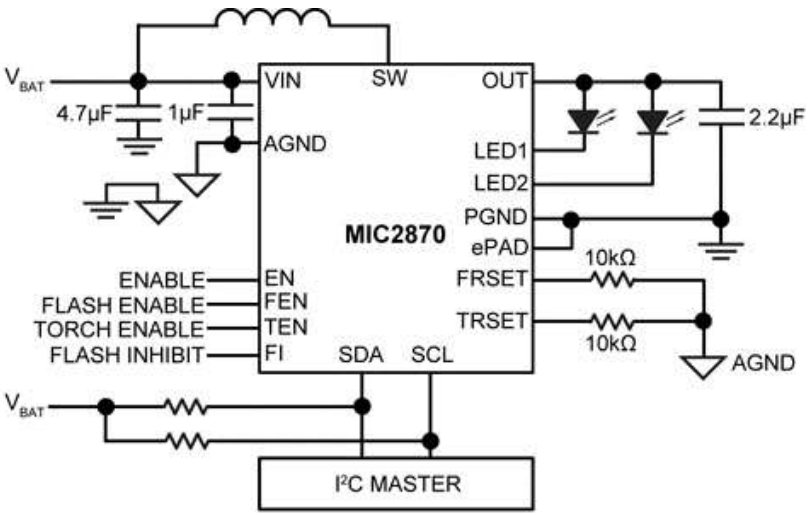

<< BACK

MIC94030

TinyFET® P-Channel MOSFET

Online Datasheet

Features:

- 13.5V minimum drain-to-source breakdown
- 0.75Ω typical on-resistance at 4.5V gate-to-source -- voltage
- 0.45Ω typical on-resistance at 10V gate-to-source -- voltage
- Operates with 2.7V gate-to-source voltage
- Separate substrate connection for added control
- Industry's smallest surface mount package

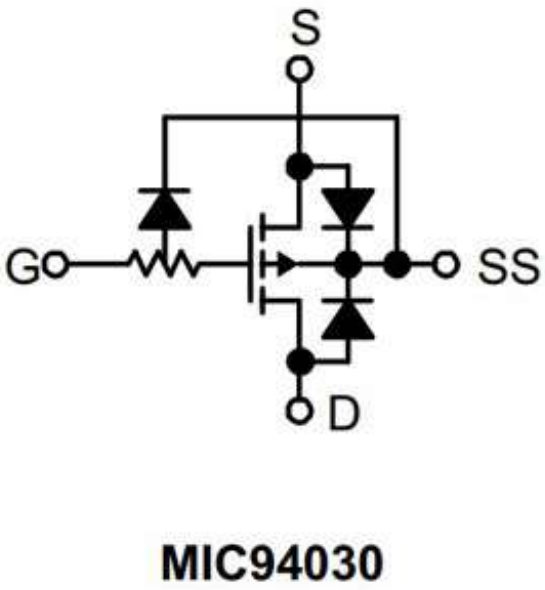

<< BACK

MIC95410

6.6mΩ $R_{DS(ON)}$ 7A 5.5V VIN Load Switch in 1.2×2.0 QFN Package

Online Datasheet

Features:

- Ultra-low RDS(ON): 6.6mΩ typical
- True 7A current capability
- Power rail switching from sub-1V to 5.5V
- Bias voltage form 2.7V to 9V
- ≤1µA OFF-state bias supply current
- ≤1µA OFF-state power switch leakage current
- Adjustable slew rate for inrush current limiting by -- external capacitor
- Load discharge
- TTL-compatible control input
- 10-pin 1.2mm × 2.0mm QFN package, 0.5mm pin -- pitch
- -40ºC to +125ºC junction temperature range

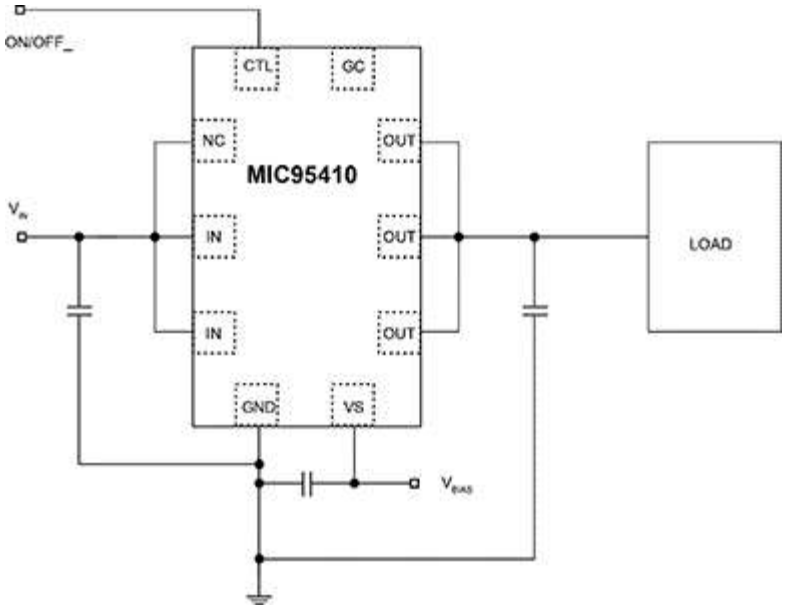

<< BACK

MIC94161/2/3/4/5

3A High-Side Load Switch with Reverse Blocking

Online Datasheet

Features:

- 1.5mm × 1mm 6-ball WLCSP package
- 14.5mΩ R_{DSON}
- 1.7V to 5.5V input voltage range
- 3A continuous operating current
- Ultra-low quiescent current
- Reverse current flow blocking (no “body diode”)
- Internal level shift for CMOS/TTL control logic
- Micropower shutdown current
- Soft-start: MIC94161/4/5 (2.7ms)
- Load discharge circuit: MIC94162/4
- Ultra-fast turn-off time
- Junction operating temperature: -40ºC to +125ºC

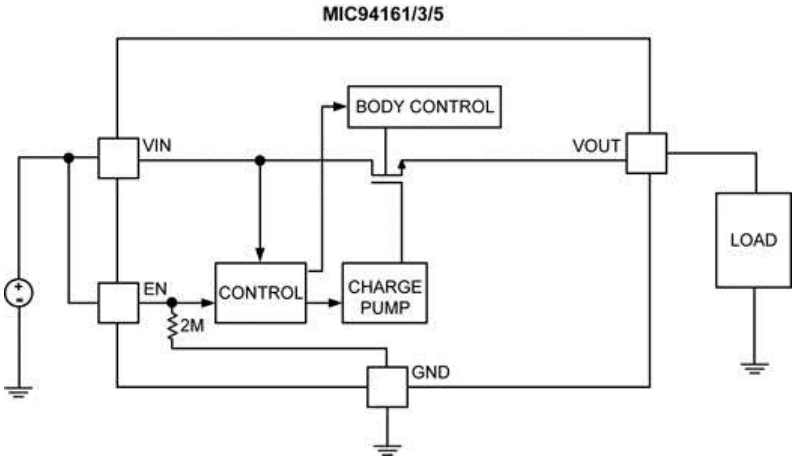

<< BACK

MIC94040/1/2/3

28mΩ RDSON 3A High Side Load Switch in 1.2x1.2 MLF®

Online Datasheet

Features:

- 28mΩ RDSON
- 3A continuous operating current
- 1.2mm x 1.2mm space saving 4-pin MLF® package
- 1.7V to 5.5V input voltage range
- Internal level shift for CMOS/TTL control logic
- Ultra low quiescent current
- Micro-power shutdown current
- Soft-Start: MIC94042, MIC94043
- Load discharge circuit: MIC94041, MIC94043
- Ultra fast turn off time
- Junction operating temperature: -40ºC to +125ºC

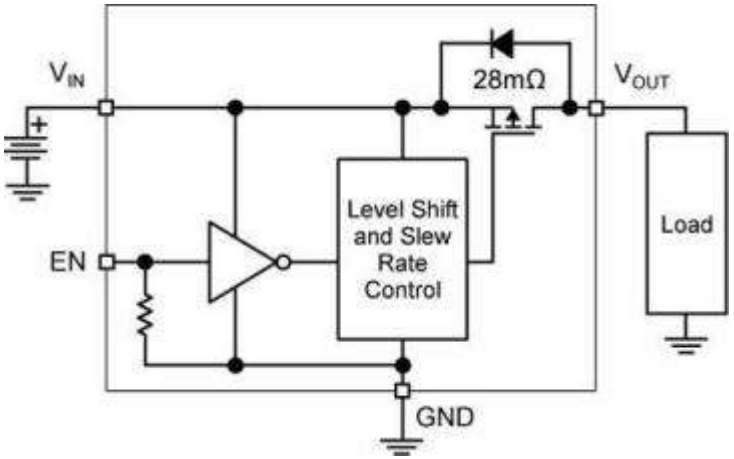

<< BACK

MIC94044/5

28mΩ RDSON 3A High Side Load Switch in 1.2x1.2 MLF®

Online Datasheet

Features:

- 28mΩ RDSON
- 3A continuous operating current
- 1.2mm x 1.2mm space saving 4-pin MLF® package
- 1.7V to 5.5V input voltage range
- Internal level shift for CMOS/TTL control logic
- Ultra low quiescent current
- Micro-power shutdown current
- Soft-Start: 1ms
- Load discharge circuit: MIC94045
- Ultra fast turn off time
- Junction operating temperature: -40ºC to +125ºC

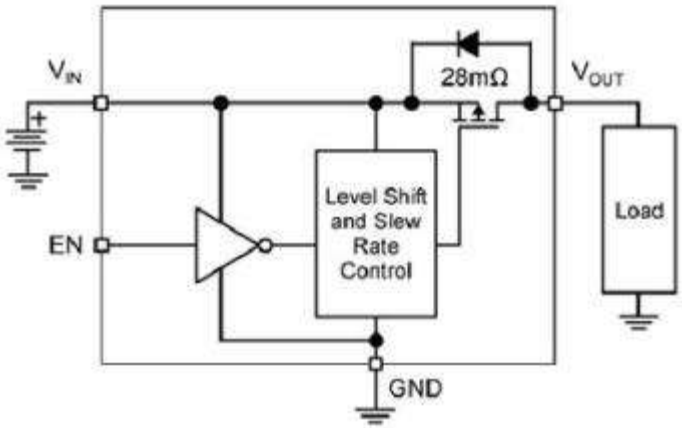

MIC94044 (1ms soft-start)

<< BACK

MIC94052/3

84mW P-Channel MOSFET in SC-70-6

Online Datasheet

Features:

- 1.8V to 5.5V input voltage range
- Low on-resistance P-channel MOSFET
- 70mΩ at V_{GS} = 4.5V (typ)
- 2A continuous current
- V_{GS} pull-up resistor (MIC94053)
- Teeny™ SC-70-6 package
- Junction temperature range: -40ºC to +150ºC

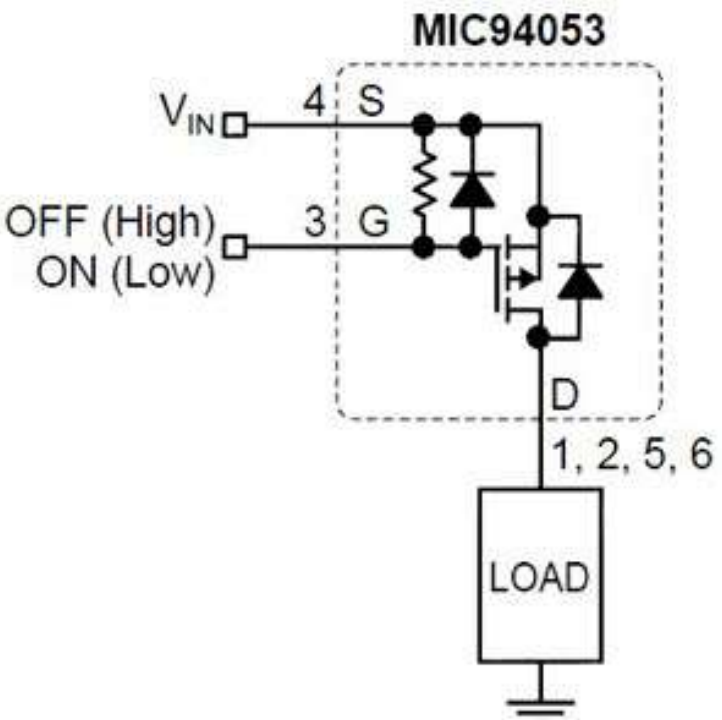

<< BACK

MIC94060/1/2/3

High Side Power Switches

Online Datasheet

Features:

- High efficiency (no voltage boost losses)
- Dynamic Average Matching™ (DAM™)
- Ultra Fast PWM™ control (200Hz to 500kHz)
- Input voltage range: 3.0V to 5.5V
- Dropout of 40mV at 20mA
- Matching better than ±1.5% (typical)
- Current accuracy better than ±1.5% (typical)
- Maintains proper regulation regardless of how -- many channels are utilized
- Available in a 10-pin 2mm x 2mm Thin MLF® -- package

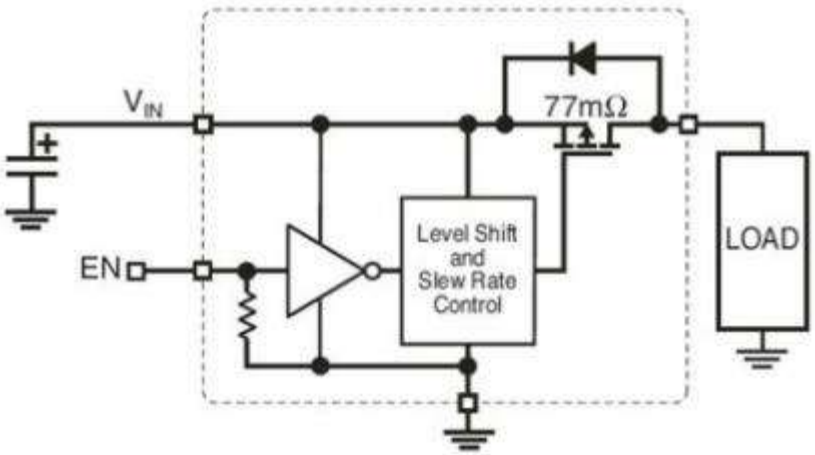

MIC94060, 62 Load Switch Application

<< BACK

MIC94064/5

High Side Power Switches

Online Datasheet

Features:

- 1.7V to 5.5V input voltage range
- 2A continuous operating current
- 77mΩ (typ) R DSON
- Low 2µA quiescent current
- Soft-Start: 115µs
- Micro-power shutdown <1µA
- Load discharge circuit: MIC94065
- Built-in level shift for control logic; can be –
  - operated by 1.5V logic
- Space saving 1.2mm x 1.6mm Thin MLF® package

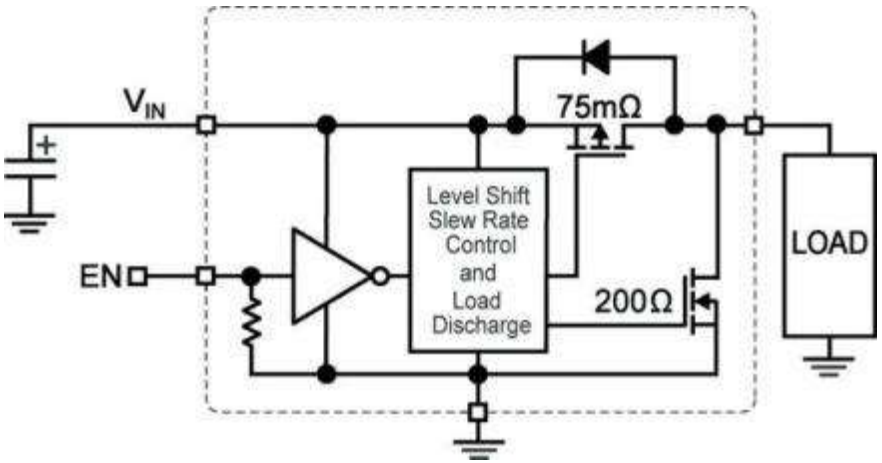

<< BACK

MIC94080/1/2/3/4/5

67mΩ RDSON 2A High Side Load Switch in 0.85x0.85 Thin MLF®

Online Datasheet

Features:

- High efficiency (no voltage boost losses)
- Dynamic Average Matching™ (DAM™)
- Ultra Fast PWM™ control (200Hz to 500kHz)
- Input voltage range: 3.0V to 5.5V
- Dropout of 40mV at 20mA
- Matching better than ±1.5% (typical)
- Current accuracy better than ±1.5% (typical)
- Maintains proper regulation regardless of how –
  - many channels are utilized
- Available in a 10-pin 2mm x 2mm Thin MLF® package

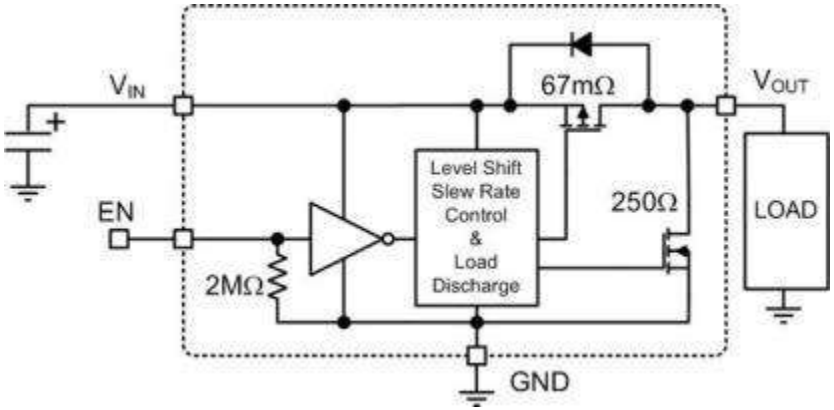

<< BACK

MIC94050/1

4-Terminal TinyFET® P-Channel MOSFET

Online Datasheet

Features:

- 0.125Ω typical on-resistance at 4.5V gate-to-source –
  - voltage
- Operates with 1.8V gate-to-source voltage
- Separate substrate connection allows reverse-blocking

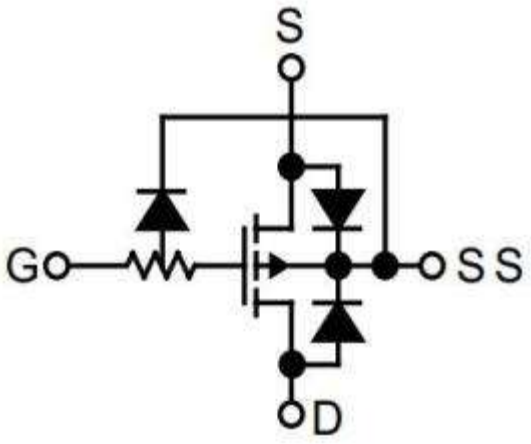

MIC94050

<< BACK

MIC94070/1/2/3

High Side Power Switches

Online Datasheet

Features:

- 1.7V to 5.5V input voltage range
- 1.2A continuous operating current
- 3A pulse current
- 120mΩ R DSON (typical)
- Low 2µA quiescent current
- Soft-Start: MIC94072/73
- Micro-power shutdown <1µA
- Load discharge circuit: MIC94071, MIC94073
- Built-in level shift for control logic
  - Can be operated by 1.5V logic
- 1.2mm x 1.6mm Thin MLF® package

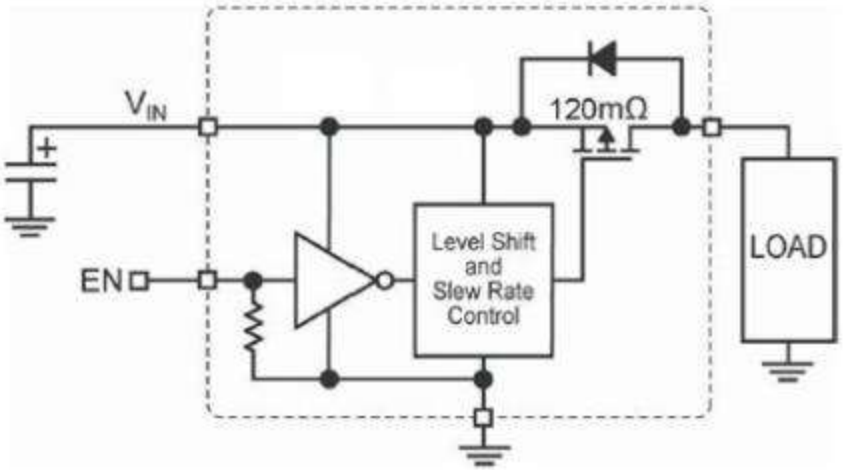

MIC94070, 72
Load Switch Application

<< BACK

MIC94090/1/2/3/4/5

High Side Load Switches for Consumer Applications

Online Datasheet

Features:

- 1.7V to 5.5V input voltage range
- 1.2A continuous operating current
- 130mΩ R DS(ON)
- Internal level shift for CMOS/TTL control logic
- Ultra low quiescent current
- Micro-power shutdown current
- Rapid turn-on: MIC94090/1
- Soft-Start: MIC94092/3 (790µs), MIC94094/5 – - (120µs)
- Load discharge circuit: MIC94091/3/5
- 1.2mm x 1.2mm Thin MLF® and SC-70-6 packages

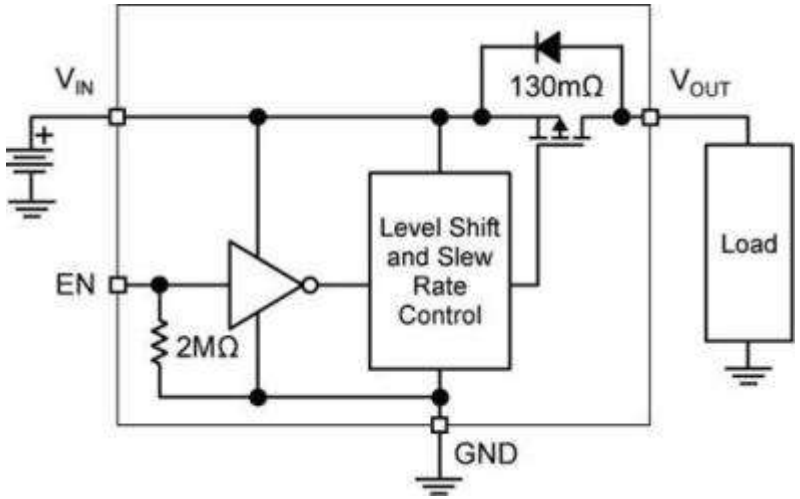

<< BACK

MIC94066/7/8/9

Dual High Side Power Switches

Online Datasheet

Features:

- 1.7V to 5.5V input voltage range
- 2A continuous operating current
- 85mΩ (typ) R ON
- Built-in level shift for control logic; can be operated by - 1.5V logic
- Low 2µA quiescent current
- Soft-Start: MIC94068-69
- Micro-power shutdown <1µA
- Load discharge circuit: MIC94067, MIC94069
- Space saving 2mm x 2mm MLF® package

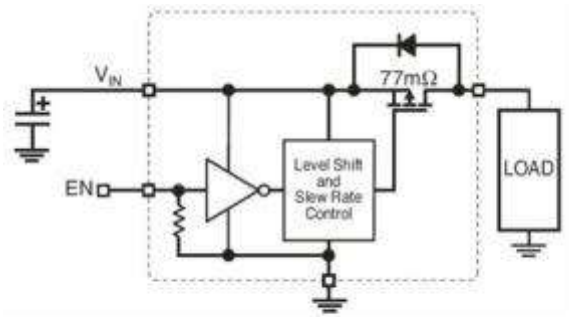

½ MIC94066, 68
Load Switch Application

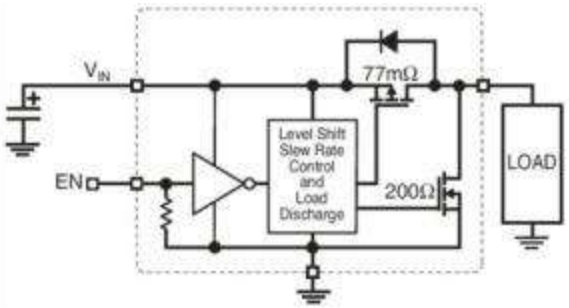

½ MIC94067, 69
Load Switch with Capacitive Load Discharge

<< BACK

MIC2044/45

High Current Low Voltage Protected Power Distribution Switch

Online Datasheet

Features:

- 30mΩ maximum on-resistance
- 0.8V to 5.5V operating range
- Adjustable current limit
- Up to 6A continuous output current
- Short circuit protection
- Very fast reaction to short circuits
- Thermal shutdown
- Adjustable slew-rate control
- Circuit breaker mode (MIC2045)
- Fault status flag
- Power-Good detection
- Undervoltage lockout
- No reverse current flow through the switching MOSFET when –
  - OFF or disabled
- Low quiescent current

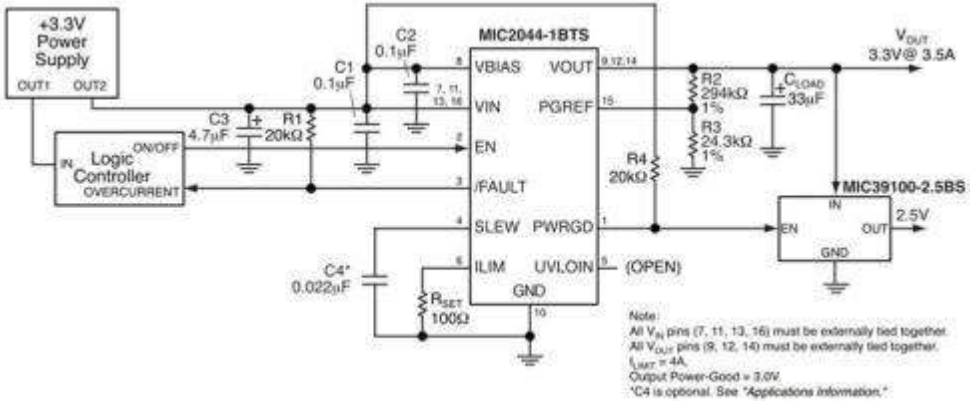

<< BACK

MIC2545A/49A

Programmable Current-Limit High-Side Switch

Online Datasheet

Features:

- 2.7V to 5.5V input
- Adjustable current-limit up to 3A
- Reverse current flow blocking
- 90µA typical on-state supply current
- 1µA typical off-state supply current
- 50mΩ maximum on-resistance
- Open-drain fault flag
- Thermal shutdown
- Thermal-shutdown output latch (MIC2549A)
- 2ms (slow) soft-start turn-on, fast turnoff
- Available with active-high or active-low enable

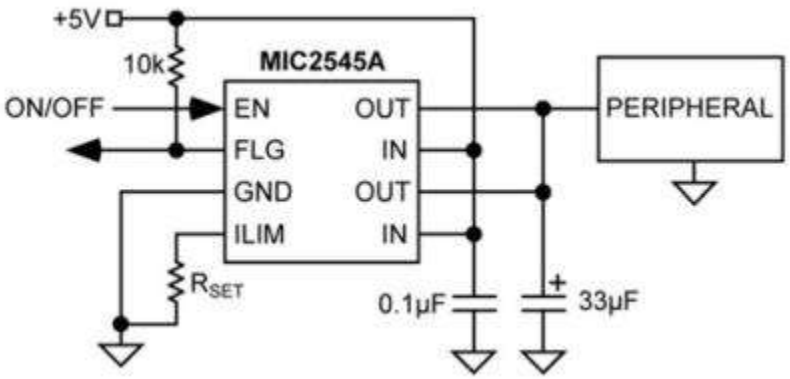

<< BACK

MIC2042/43

High Current Low Voltage Protected Power Distribution Switch

Online Datasheet

Features:

- 60mΩ max. on-resistance
- 0.8V to 5.5V operating range
- Adjustable current limit
- Power-Good detection
- Up to 3A continuous output current
- Short-circuit protection with thermal –
  - shutdown
- Adjustable slew-rate control
- Circuit breaker mode (MIC2043)
- Fault status flag
- Undervoltage lockout
- Output MOSFET reverse current flow block when disabled
- Very fast reaction to short-circuits
- Low quiescent current

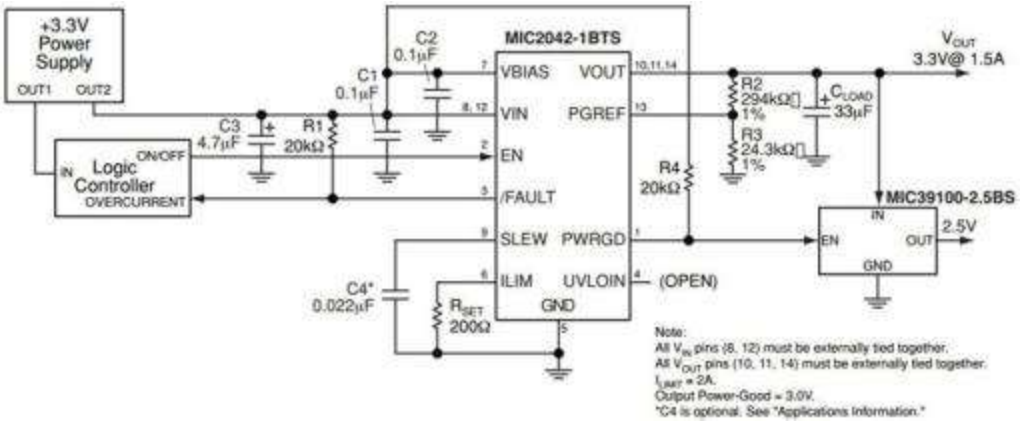

<< BACK

MIC2039

High-Accuracy High-Side Adj. Current Limit Power Switch

Online Datasheet

Features:

- ±5% current limit accuracy
- Input supply range from 2.5V to 5.5V
- Low quiescent current: 100µA typical (switch ON)
- 75mΩ typical RDS(ON) at 5.0V
- 0.2A to 2.5A adjustable output current
- Kickstart - momentary secondary current -
  - limit threshold (120ms period)
- Soft-start functionality
- Undervoltage lockout (UVLO)
- Fast 10µs short-circuit response time (non-Kickstart options)
- Fault status output flag
- Logic controlled enable (active-high, active-low)
- Thermal shutdown
- Pin compatible with the MIC2009/MIC2019
- 6-pin 2mm x 2mm thin DFN and 6-pin SOT-23 packages
- Junction temperature range from -40ºC to +125ºC

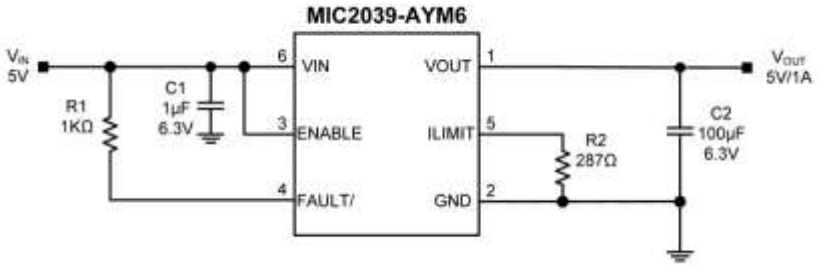

<< BACK

MIC2007/8/9 MIC2017/8/9

Adjustable Current Limiting Power Distribution Switches

Online Datasheet

Features:

- 70mΩ typical on-resistance @ 5V
- Enable active high or active low
- 2.5V-5.5V operating range
- Undervoltage lock-out (UVLO)
- Variable UVLO allows adjustable –
  - UVLO thresholds*
- Automatic load discharge for capacitive loads*
- Soft-start prevents large current inrush
- Adjustable slew rate allows custom slew rates*
- Automatic-on output after fault
- Thermal protection
- Adjustable current limit 0.2A to 2.0A* (MIC20X7-MIC20X9)
- Adjustable current limit 0.1A to 0.9A* (MIC20X9A)

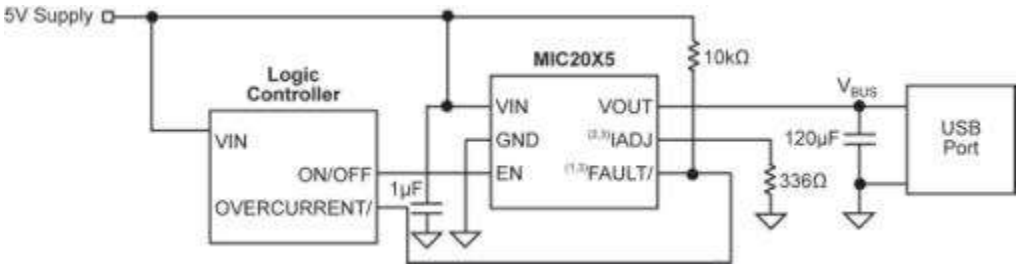

<< BACK

MIC2009A

Adjustable Current Limiting Power Distribution Switches

Online Datasheet

Features:

- Enable active high or active low
- 2.5V-5.5V operating range
- Undervoltage lock-out (UVLO)
- 70mΩ typical on-resistance @ 5V
- Variable UVLO allows adjustable –
  - UVLO thresholds*
- Automatic load discharge for -
  - capacitive loads*
- Soft-start prevents large current inrush
- Adjustable slew rate allows custom slew rates*
- Automatic-on output after fault
- Thermal protection
- Adjustable current limit 0.1A to 0.9A* (MIC20X9A)

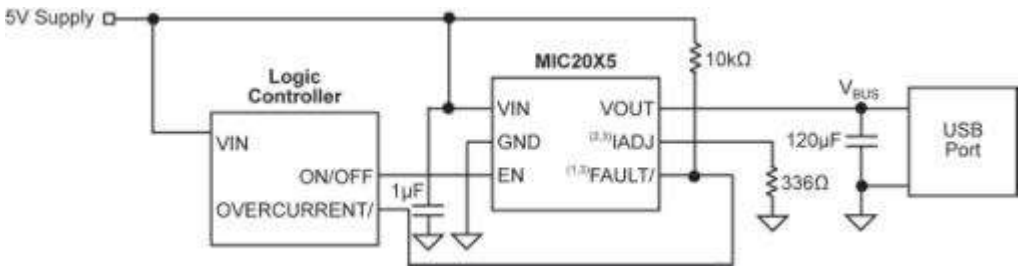

<< BACK

MIC2544/48

Programmable Current Limit High-Side Switch

Online Datasheet

Features:

- 2.7V to 5.5V input
- Adjustable current-limit up to 1.5A
- 75µA typical on-state supply current
- 1µA typical off-state supply current
- 120mΩ maximum on-resistance
- Open-drain fault flag
- Thermal shutdown
- Thermal shutdown output latch (MIC2548)
- 2ms (slow) turn-on and fast turnoff
- Available with active-high or active-low enable
- Reverse current flow blocking (no "body diode")

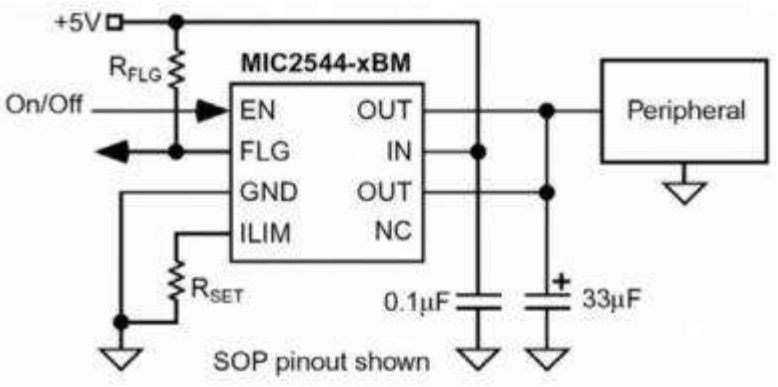

<< BACK

MIC2544A/48A

Programmable Current Limit High-Side Switch

Online Datasheet

Features:

- 2.7V to 5.5V input
- Adjustable current-limit up to 1.5A
- 90µA typical on-state supply current
- 1µA typical off-state supply current
- 120mΩ maximum on-resistance
- Open-drain fault flag
- Thermal shutdown
- Thermal shutdown output latch (MIC2548A)
- 2ms (slow) turn-on and fast turn-off
- Available with active-high or active-low enable
- Reverse current flow blocking (no "body diode")

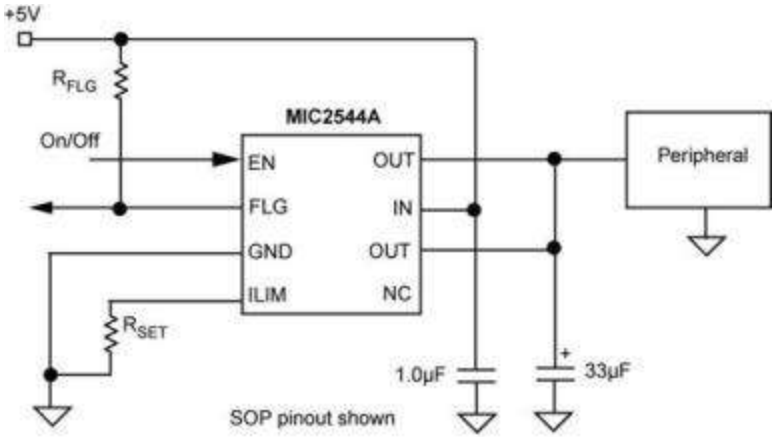

<< BACK

MIC2040/41

Single Channel Low Voltage Power Distribution Switch

Online Datasheet

Features:

- 75mΩ max. on-resistance
- 0.8V to 5.5V operating range
- Adjustable current limit
- Up to 1.5A continuous output current
- Circuit breaker mode (MIC2041)
- Fault status flag
- Undervoltage lockout
- Output MOSFET reverse current flow
  - block when disabled
- Very fast reaction to short-circuits
- Low quiescent current
- Short circuit protection with thermal shutdown

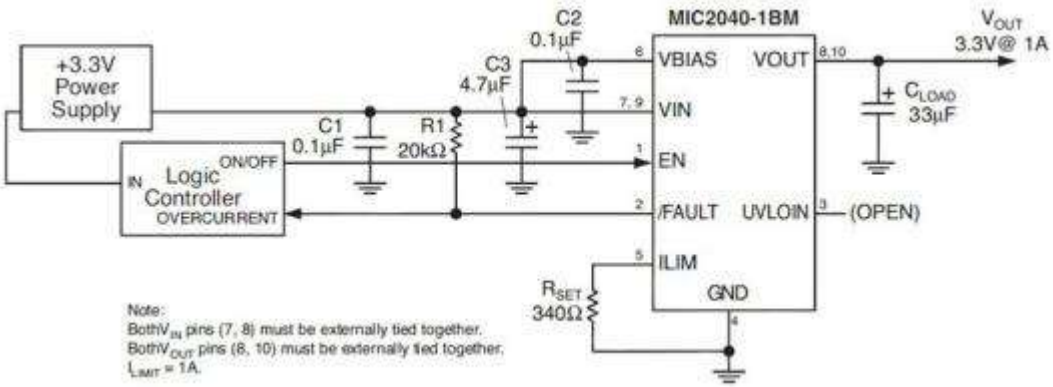

<< BACK

MIC2033

High-Accuracy High-Side Fixed Current Limit Power Switch

Online Datasheet

Features:

- ±5% current limit accuracy
- Input supply range from 2.5V to 5.5V
- 75mΩ typical RDS(ON) at 5V
- Low quiescent current: 100µA typical (switch – - ON)
- Current limit options: 0.5A, 0.8A, 1A, and 1.2A
- Soft-start control via an external capacitor
- Undervoltage lockout (UVLO)
- Fast response time (10µs) to short circuit loads
- Fault status output flag
- Logic controlled enable (active-high, active-low)
- Thermal shutdown
- Pin compatible with MIC2005
- 6-pin 2mm x 2mm thin DFN and 6-pin SOT-23 packages
- Junction temperature range from -40ºC to +125ºC

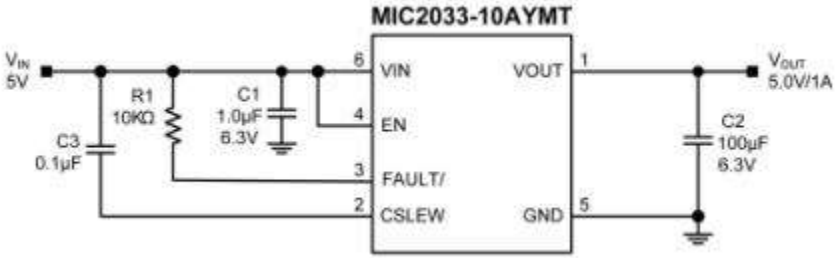

<< BACK

MIC2003/4/5
MIC2013/4/5

Fixed Current Limiting Power Distribution Switches

Online Datasheet

Features:

- 70mΩ typical on-resistance @ 5V
- Enable active high or active low
- 2.5V-5.5V operating range
- Undervoltage lock-out (UVLO)
- Pre-set current limit values of 0.5A, -
  - 0.8A, and 1.2A*
- Variable UVLO allows adjustable –
  - UVLO thresholds*
- Automatic load discharge for capacitive loads*
- Soft-start prevents large current inrush
- Adjustable slew rate allows custom slew rates*
- Automatic-on output after fault
- Thermal protection

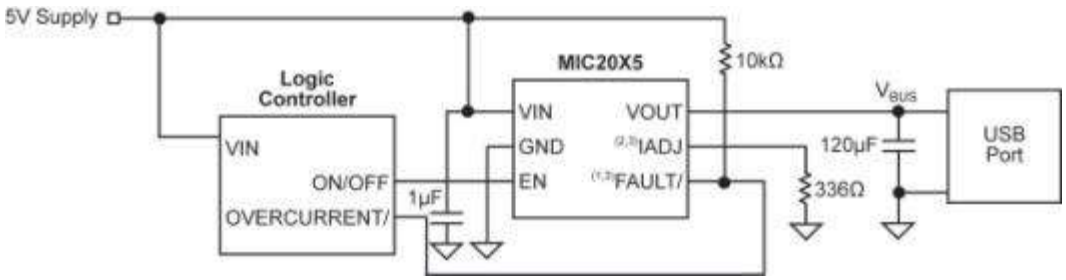

<< BACK

MIC2095/7/8/9

Current-Limiting Power Distribution Switches

Online Datasheet

Features:

- Under voltage lock-out (UVLO)
- Automatic-on output after fault
- Thermal protection
- Soft start prevents large current inrush
- Enable active high or active low
- 170mΩ typical on-resistance @ 5V
- 2.5V - 5.5V operating range
- MIC2095: 0.5A fixed current limit
- MIC2098: 0.9A fixed current limit
- MIC2097: Kickstart for high peak current loads
- MIC2097/99: Resistor programmable current limit - 0.1A to 1.1A

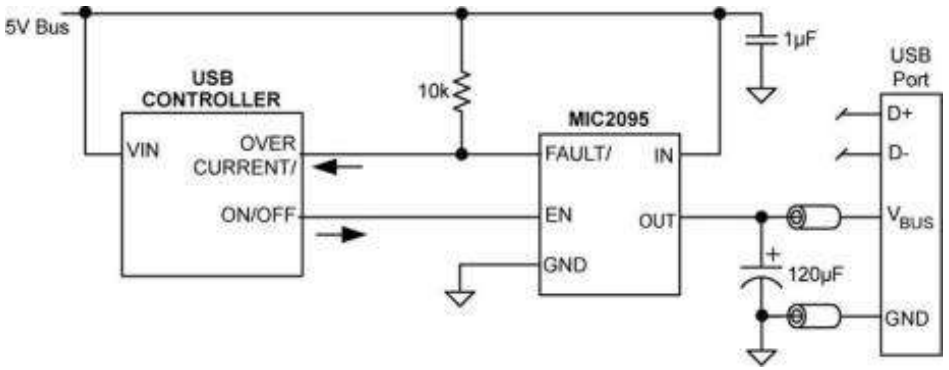

<< BACK

MIC2025/75

Single-Channel Power Distribution Switch MM8®

Online Datasheet

Features:

- 140mΩ maximum on-resistance
- 2.7V to 5.5V operating range
- Undervoltage lockout
- Logic-compatible input
- Soft-start circuit
- Low quiescent current
- Reverse current flow blocking (no –
  - "body diode")
- Circuit breaker mode (MIC2075) –
  - reduces power consumption
- 500mA minimum continuous output current
- Short-circuit protection with thermal shutdown
- Fault status flag with 3ms filter eliminates false assertions
- Pin-compatible with MIC2525

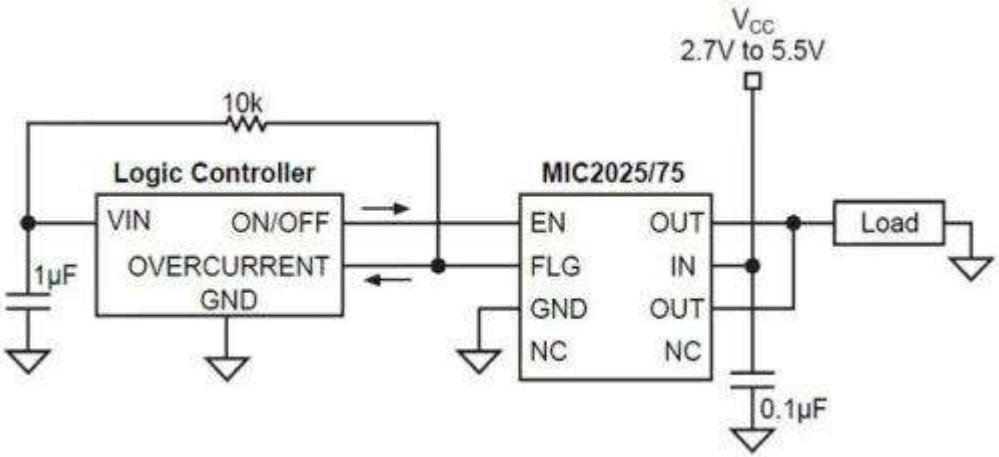

<< BACK

MIC2091

Current Limiting Power Distribution Switches

Online Datasheet

Features:

- 1.8V to 5.5V supply voltage
- 790 mΩ typical RDSON at 3.3V
- 100mA minimum continuous current
- Reverse current blocking (OGI)
- Thermal shutdown
- Under-voltage lockout (UVLO)
- Low quiescent current
- 20ns super fast reaction time to hard short – at output
- 10ms fault flag delay (tD_FAULT/) eliminates false assertions
- Auto-retry overcurrent and short-circuit protection (-1 version)
- Latch-off on current limit (-2 version)
- Fault status flag indicates: over-current, over-temperature, or UVLO

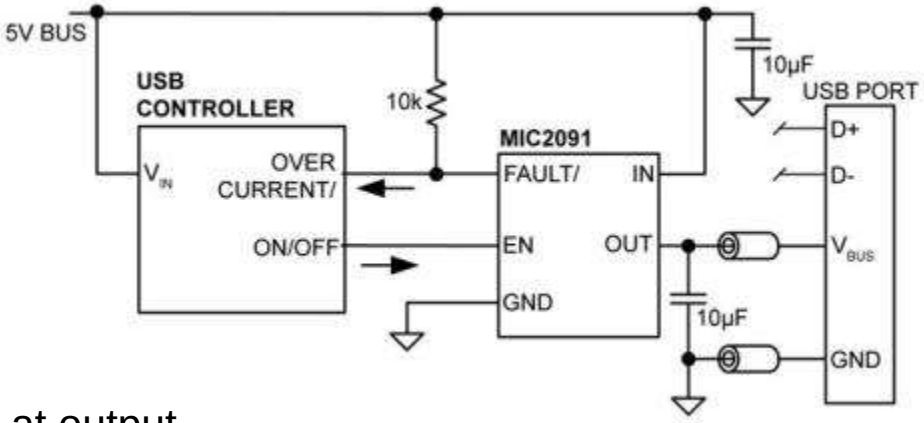

<< BACK

MIC2090

Current Limiting Power Distribution Switches

Online Datasheet

Features:

- 1.8V to 5.5V supply voltage
- 790 mΩ typical RDSON at 3.3V
- 50mA minimum continuous current
- Reverse current blocking (OGI)
- Under-voltage lockout (UVLO)
- Low quiescent current
- Thermal shutdown
- 20ns super fast reaction time to hard short at output
- 10ms fault flag delay (tD_FAULT/) eliminates false assertions
- Auto-retry overcurrent and short-circuit protection (-1 version)
- Latch-off on current limit (-2 version)
- Fault status flag indicates: over-current, over-temperature, or UVLO

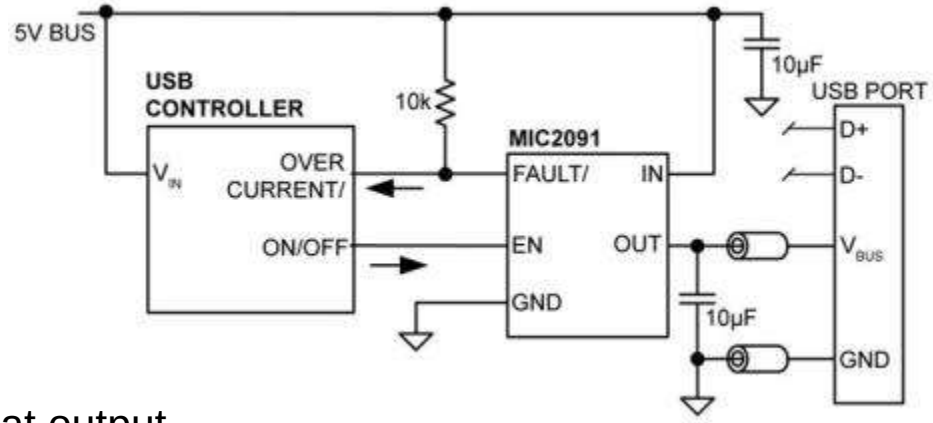

<< BACK

MIC2514

IttyBitty® Integrated High-Side Switch

Online Datasheet

Features:

- MOSFET on-resistance
  - 1.5Ω typical at 5V
  - 0.95Ω typical at 12V
- 3V to 13.5V input
- 25µA typical on-state supply current at 5V
- <1µA typical off-state supply current at 5V
- Current limit
- Thermal shutdown
- Slow turn-on

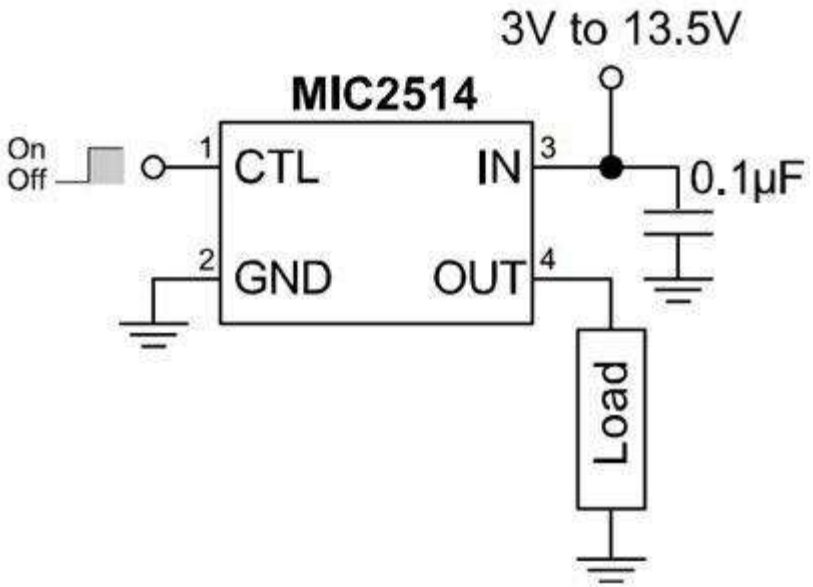

<< BACK

MIC2505/-1/-2

Single 2A High-Side Switches

Online Datasheet

Features:

- Low MOSFET on resistance to 2.7V
  - 30mΩ typical at 5V (MIC2505-series)
  - 35mΩ typical at 3.3V (MIC2505-series)
- 2.7V to 7.5V input
- 110µA typical on-state supply current
- 1µA typical off-state supply current
- Output can be forced higher than input (off-state)
- Current limit
- Thermal shutdown
- 2.5V undervoltage lockout (UVLO)
- Open-load detection (MIC2505 only)
- Open-drain fault flag
- 5ms (slow) turn-on and fast turnoff
- Logic-level control/enable input

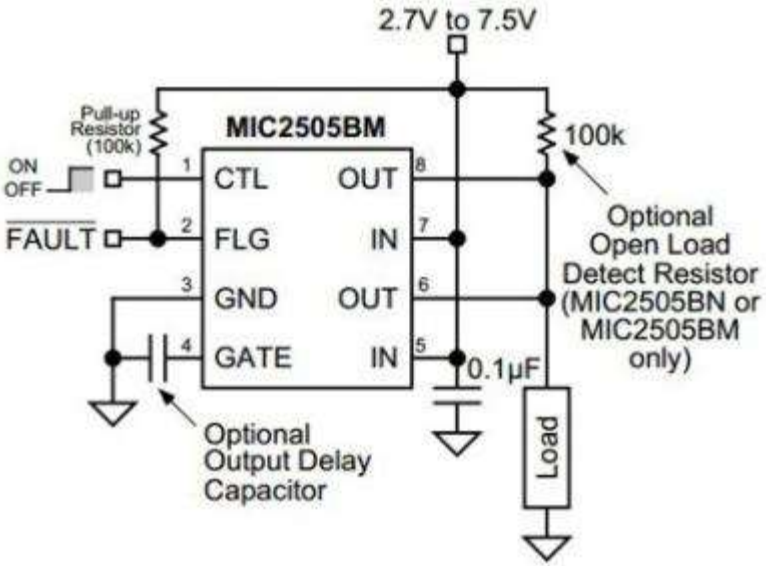

<< BACK

MIC2506

Dual 1A High-Side Switches

Online Datasheet

Features:

- Low MOSFET on resistance to 2.7V
  - 75mΩ typical at 5V (each MIC2506 output)
  - 80mΩ typical at 3.3V (each MIC2506 output)
- 2.7V to 7.5V input
- 110µA typical on-state supply current
- 1µA typical off-state supply current
- Output can be forced higher than input (off-state)
- Current limit
- Thermal shutdown
- 2.5V undervoltage lockout (UVLO)
- Open-load detection (MIC2506 only)
- Open-drain fault flag
- 5ms (slow) turn-on and fast turnoff
- Logic-level control/enable input

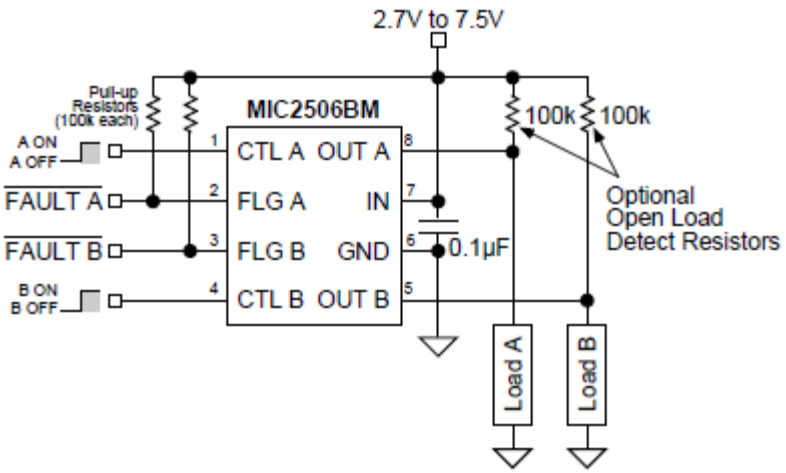

<< BACK

UCS2112

USB Dual-Port Power Switch and Current Monitor

Online Datasheet

Features:

- Dual-Port Power Switches:
- 3.0A continuous current per VBUS port
- Independent port power switch enable pins
- Dual fault ALERT# active drain output pins
- Constant Current or Trip mode current limiting
- Undervoltage, overvoltage lockout, back-drive, -- back-voltage protection
- Auto-recovery fault handling with low test current
- BOOST# logic output to increase DC-DC converter – output under large load conditions
- A_DET# open-drain outputs for device detection
- SMBus 2.0/I2C™ Mode Features:
  - Eight programmable current limits
  - Block read and block write
- 4x4 mm 20-pin QFN
- Self-contained current monitoring
- Fully programmable per-port charge rationing and behaviors
- Per-port BC1.2 VBUS Discharge Function
- Operating Temperature Range: -40°C to +105°C

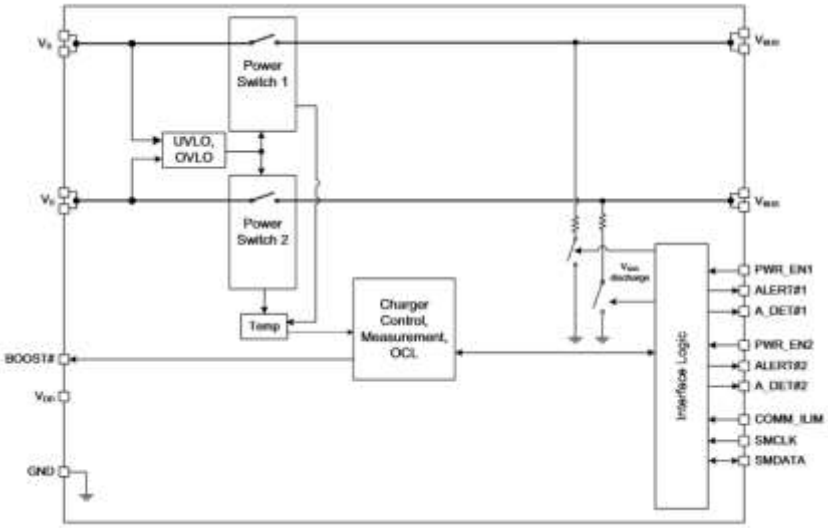

<< BACK

UCS2113

USB Dual-Port Power Switch and Current Monitor

Online Datasheet

Features:

- Dual-Port Power Switches
- 2.9V to 5.5V source voltage range
- 3.0A continuous current per VBUS port
- Independent port power switch enable pins
- Dual fault ALERT# active drain output pins
- Constant Current or Trip mode current limiting behaviors
- Undervoltage and overvoltage lockout
- Back-drive, back-voltage protection
- Auto-recovery fault handling with low test current
- BOOST# logic output to increase DC-DC –
  - converter output under large load conditions
- SMBus 2.0/I2C™ Mode Features:
  - Eight programmable current limits
  - Block read and block write Block read and block write
- Self-Contained Current Monitoring)
- Fully Programmable Per-Port Charge Rationing
- Configurable Per-Port BC1.2 VBUS Discharge Function
- Operating Temperature Range: -40°C to +105°C
- 4x4 mm 20-pin QFN

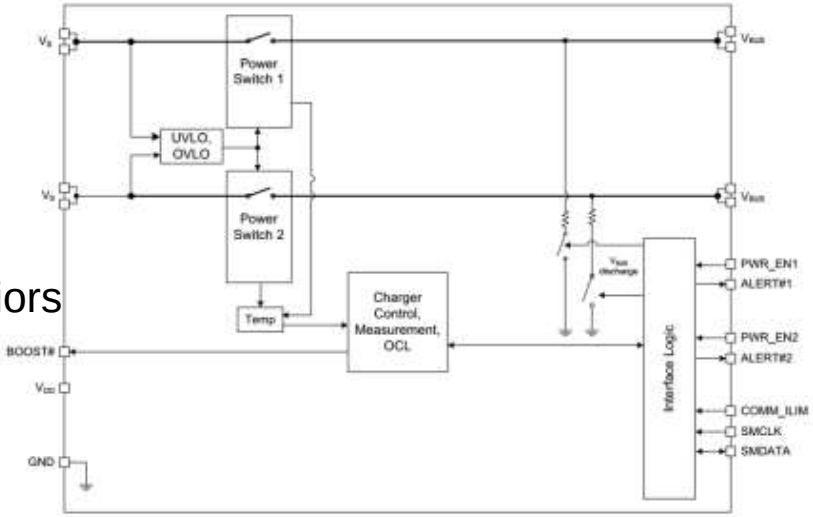

<< BACK

MIC2546/47

Dual Programmable Current Limit Switch

Online Datasheet

Features:

- 2.7V to 5.5V input
- Adjustable current-limit up to 1.5A
- Reverse current flow blocking (no "body diode")
- 100µA typical on-state supply current per channel
- 2µA typical off-state supply current
- 120mΩ maximum on-resistance
- Open-drain fault flag
- Thermal shutdown
- Thermal shutdown output latch (MIC2547)
- 2ms (slow) turn-on and fast turn-off
- Available with active-high or active-low enable

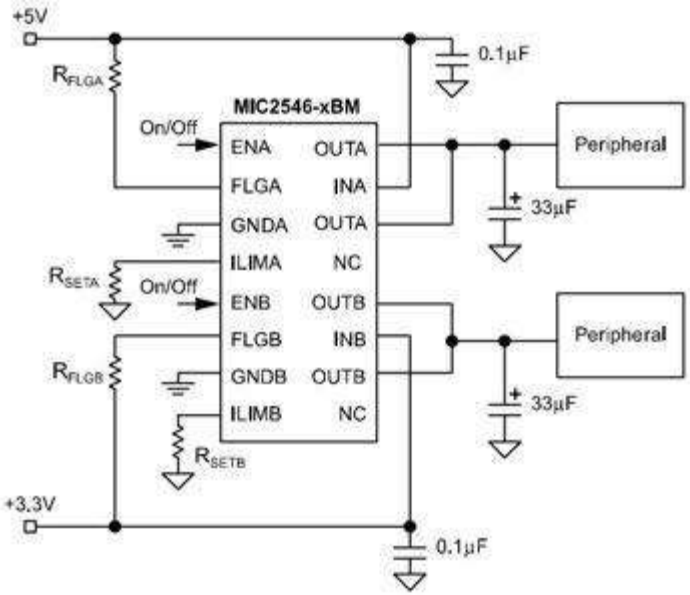

<< BACK

MIC2026/76

Dual-Channel Power Distribution Switch

Online Datasheet

Features:

- 140mΩ maximum on-resistance per channel
- 2.7V to 5.5V operating range
- 500mA minimum continuous current per channel
- Shortcircuit protection with thermal shutdown
- Thermally isolated channels
- Fault status flag with 3ms filter eliminates false –- assertions
- Undervoltage lockout
- Reverse current flow blocking (no "body diode")
- Circuit breaker mode (MIC2076)
- Logic-compatible inputs
- Soft-start circuit
- Low quiescent current
- Pin compatible with MIC2526

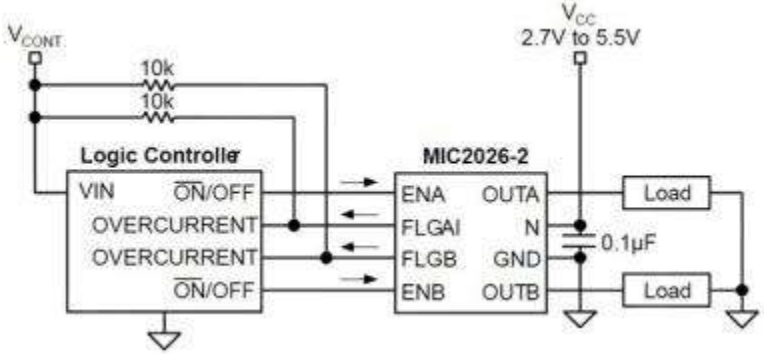

<< BACK

MIC2026A/76A

Dual-Channel Power Distribution Switch

Online Datasheet

Features:

- 100mΩ typical RDS(ON) at 5.0V
- 140mΩ maximum RDS(ON) at 5.0V
- 2.7 V to 5.5 V operating range
- 500mA minimum continuous current per channel
- Short circuit protection with thermal shutdown
- Thermally isolated channels
- Soft-start circuit
- Fault status flag with 3ms filter eliminates false –
  - assertions
- UVLO (Undervoltage lockout)
- Reverse current flow blocking (no "body diode")
- Circuit breaker mode (MIC2076A)
- Pin compatible with the MIC2026/2076
- Logic-compatible inputs
- Low quiescent current

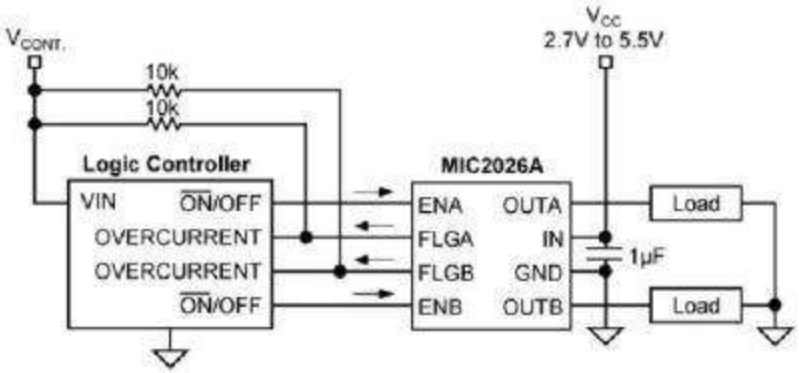

<< BACK

MIC2536

Dual USB Power Distribution Switch Final Information

Online Datasheet

Features:

- Compliant to USB specifications
- 2.7V to 5.5V operating range
- Soft-start circuit
- 100µA maximum on-state supply –
  - current
- <1µA typical off-state supply current
- Fast-acting short circuit protection with –
  - thermal shutdown
- Integrated filter eliminates false overcurrent flag assertions
- 150mA minimum continuous load current per channel
- 400mΩ typical on-resistance
- Individual open-drain fault flag pins with transient filter
- Active-high (-1) and active-low (-2) versions
- Reverse-current blocking in off mode (no "body diode")

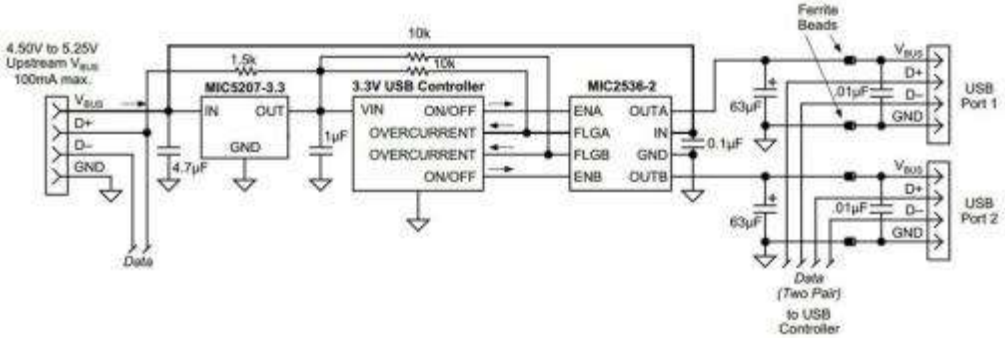

<< BACK

MIC2027/77

Quad USB Power Distribution Switch

Online Datasheet

Features:

- 150mΩ maximum on-resistance per –
  - channel
- 2.7V to 5.5V operating range
- 500mA minimum continuous current per –
  - channel
- Short-circuit protection with thermal –
  - shutdown
- Thermally isolated channels
- Fault status flag with 3ms filter eliminates –
  - false assertions
- Undervoltage lockout
- Reverse current flow blocking (no "body diode")
- Circuit breaker mode (MIC2077) reduces power consumption
- Logic-compatible inputs
- Soft-start circuit
- Low quiescent current
- Pin compatible with MIC2524 and MIC2527

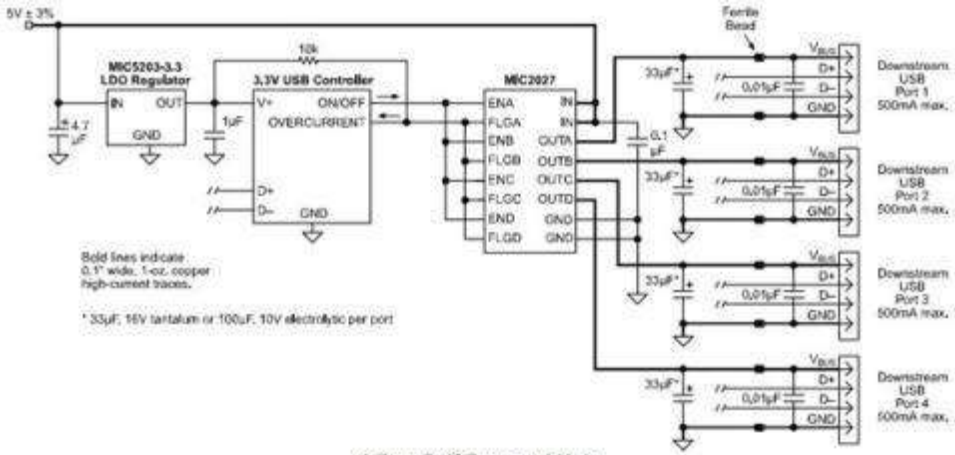

4-Port Self-Powered Hub

<< BACK

MIC2537

Quad Power Distribution Switch Final Information

Online Datasheet

Features:

- Compliant to USB specifications
- 3V to 5.5V input
- 100mA min continuous load per port
- 425mΩ typical on-resistance
- < 400mA current limit
- Individual open-drain fault flag leads
- 3V/5V-compatible enable inputs
- Active-high (-1) and active-low (-2) – - versions
- 100µA max. on-state supply current
- <1µA typical off-state supply current
- 16-lead SOP package
- Operating Temperature Range: -40ºC to +85ºC

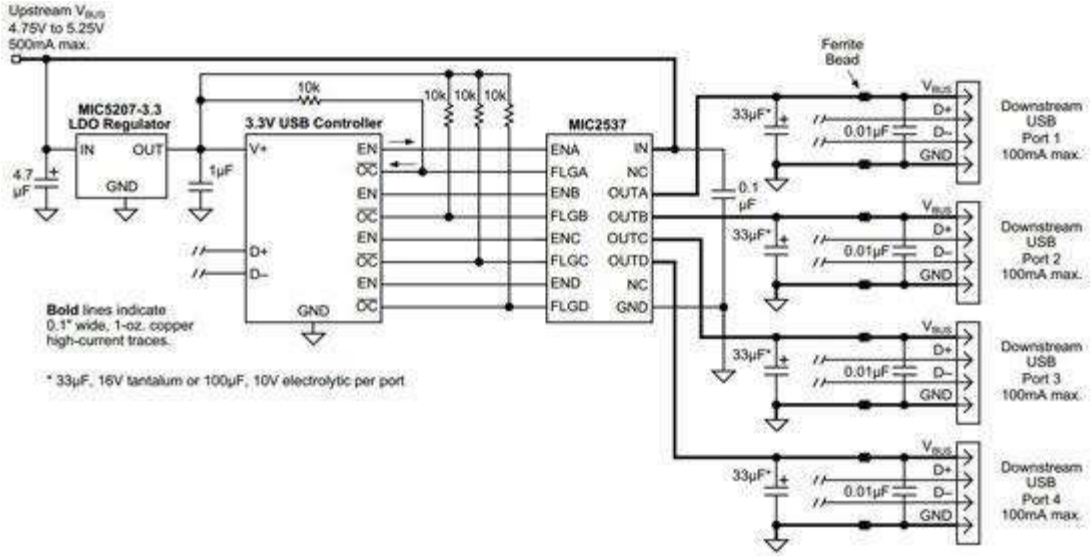

Typical Bus-Powered Hub

<< BACK

MIC2550A

Universal Serial Bus Transceiver

Online Datasheet

Features:

- Compliant to USB Specification Rev. 2.0
  - Low-speed (1.5Mbps)
  - Full-speed (12Mbps) operation
- Compliant to IEC-61000-4.2 (Level 2)
- Operation down to 2.5V
- Dual supply voltage operation
- Integrated speed-select termination supply
- Meets USB suspend current requirements
- 14-pin TSSOP and 16-pin QFN packages

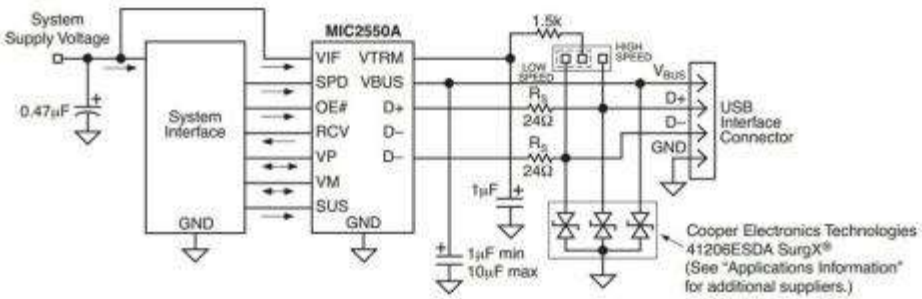

<< BACK

MIC2551A

USB Transceiver

Online Datasheet

Features:

- Compliant to USB Specification –
  - Revision 2.0 for full speed (12Mbs) –
  - and low speed (1.5Mbps) operation
- Compliant to IEC-61000-4.2 (Level 3)
- Separate I/O supply with operation –
  - down to 1.6V
- Integrated speed select termination –
  - supply
- Very-low power consumption to meet USB suspend
  - current requirements
- Small TSSOP and QFN packages
- No power supply sequencing requirements
- Software controlled re-enumeration

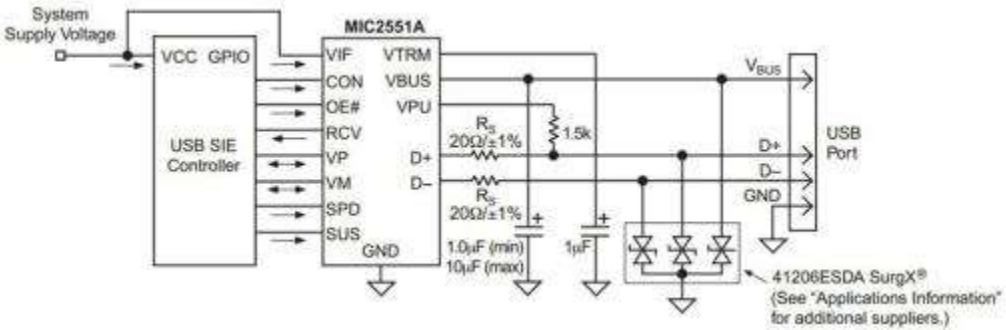

<< BACK

MIC2551A-2.5

USB Transceiver

Online Datasheet

Features:

- ±15kV ESD protection on VBUS, D+ and D-
- Smaller 2.5mm x 2.5mm QFN package
- USB 1.1 and 2.0 compliant transceiver (full – - speed -12Mbs and low speed - 1.5Mbps) – - operation
- Separate I/O supply with operation down to – - 1.6V
- Integrated speed select termination supply
- Very-low power consumption to meet USB – - suspend current requirements
- No power supply sequencing requirements
- Software controlled enumeration

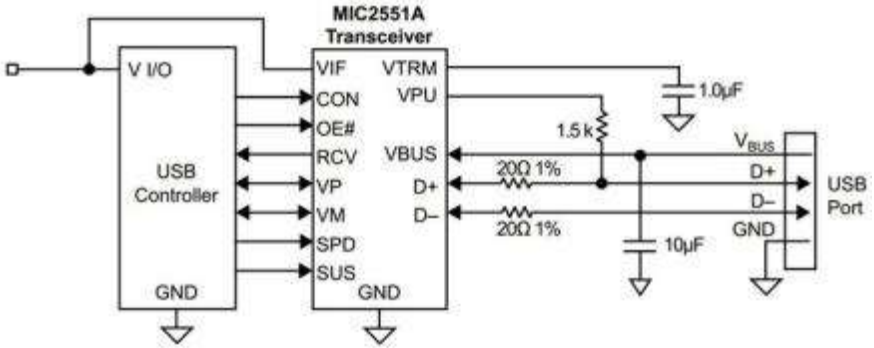

<< BACK

MIC2555

USB - OTG Transceiver

Online Datasheet

Features:

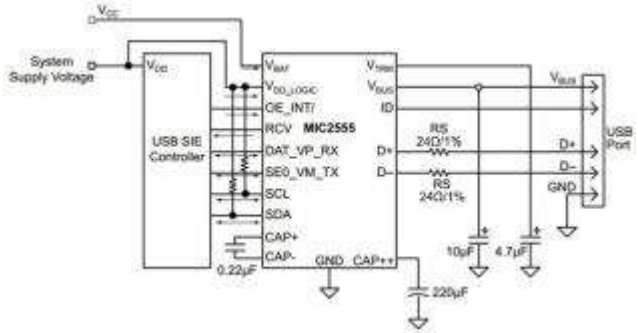

- Complies with USB-IF USB standard 2.0 and OTG –
  - supplement Revision 1.0a.
- Provides signaling and control logic for SRP and HNP, -
  - enabling USB Dual-role device operation.
- Designed for Full-speed and Low-speed USB –
  - communications.
- I2C controller interface.
- Offers 3 modes of operation: USB; UART; Audio
- Operates with VLOGIC of 1.6V - 4.5V, assuring compatibility with
  - low voltage ASICs.
- Tri-level ID detection for recognition of USB and non-USB devices.
- Supports USB/Car Kit audio interface.
- Allows Single-ended and Differential Logic I/O.
- Integrated charge pump for VBUS supply.
- On-chip pull-up, pull-down resistors minimize external component –
  - count.
- Suspend and Power-down modes for power conservation.
- Operates over the full Industrial Temperature range: -40ºC to –
  - +85ºC

<< BACK

MIC2560

PCMCIA Card Socket V_{CC} & V_{PP} Switching Matrix

Online Datasheet

Features:

- Complete PCMCIA VCC and VPP switch matrix
- No external components required
- Logic compatible with industry standard –
  - PCMCIA controllers
- No voltage overshoot or switching transients
- Break-before-make switching
- Output current limit and overtemperature –
  - shutdown
- Digital flag for error condition indication
- Ultra-low power consumption
- Digital selection of VCC and VPP voltages
- Over 1A VCC output current
- 200mA VPP (12V) output current
- Options for direct compatibility with industry standard PCMCIA controllers
- 16-Pin SOIC package

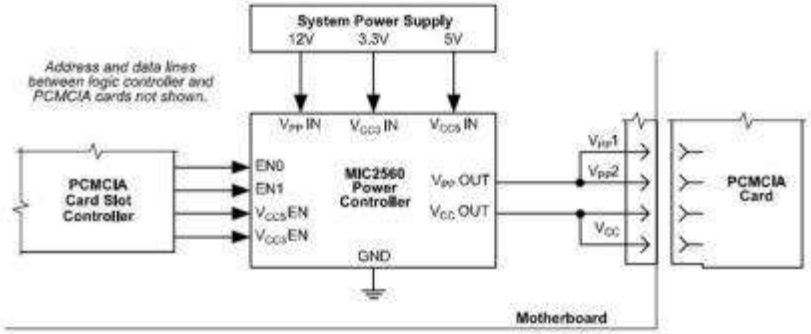

<< BACK

MIC2561

PCMCIA Card Socket V_{CC} & V_{PP} Switching Matrix

Online Datasheet

Features:

- Complete PCMCIA VCC and VPP Switch Matrix in – a Single IC
- No External Components Required
- Controlled Switching Times
- Logic Options for Compatible with Industry – Standard PCMCIA Controllers
- No Voltage Overshoot or Switching Transients
- Break-Before-Make Switching
- Output Current Limit and Over-Temperature – - Shutdown
- Digital Flag for Error Condition Indication
- Ultra Low Power Consumption
- Digital Selection of VCC and VPP Voltages
- Over 750mA of VCC Output Current
- 200mA of VPP Output Current
- 14-Pin SOIC Package

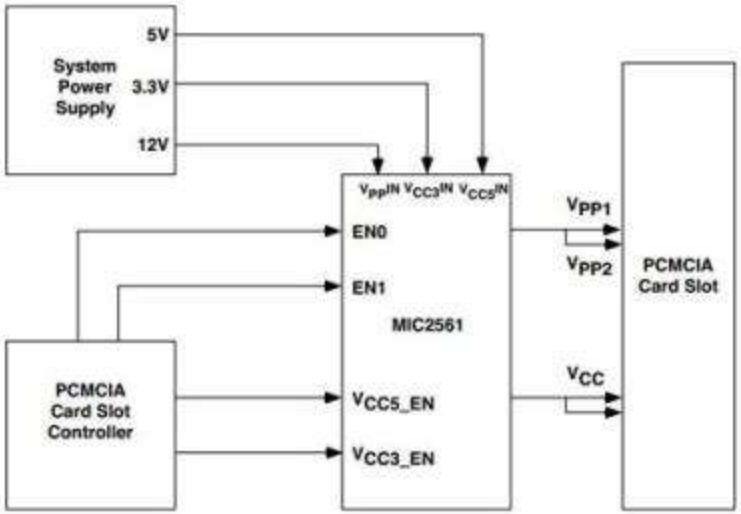

<< BACK

MIC2562A

PCMCIA/CardBus Socket Power Controller

Online Datasheet

Features:

- High-efficiency, low-resistance switches require no – - 12V bias supply
- No external components required
- Output current limit and overtemperature shutdown
- Open-drain flag for error condition indication
- Ultra-low power consumption
- Complete PC Card/CardBus VCC and VPP switch – - matrix in a single package
- Logic compatible with industry standard PC Card – - logic controllers
- No voltage shoot-through or switching transients
- Break-before-make switching
- Digital selection of VCC and VPP voltages
- Over 1A VCC output current
- Over 200mA VPP output current
- Pb-free SOIC packages

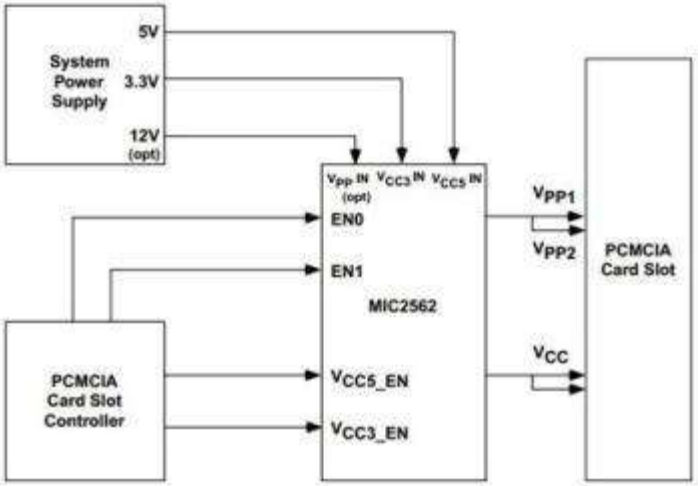

<< BACK

MIC2569

CableCARD™ Power Switch

Online Datasheet

Features:

- 110 mΩ maximum V_{CC} on resistance
- 400 mΩ maximum V_{PP} on resistance
- 3.0V to 3.6V for the $3.3V_{IN}$ operating range
- 3.0V to 5.5V for the $5V_{IN}$ operating range
- 1.3A minimum V_{CC} current limit
- 150mA minimum V_{PP} current limit –
  - (150mA each)
- Compact 16-pin QSOP packaging
- Operating temperatures from -40ºC to –
  - +85ºC Low quiescent current
- Soft start turn-on
- Break-before-make voltage switching
- Short-circuit protection with thermal shutdown
- Input under voltage lock-out (UVLO)
- ESD protection
- No external components required

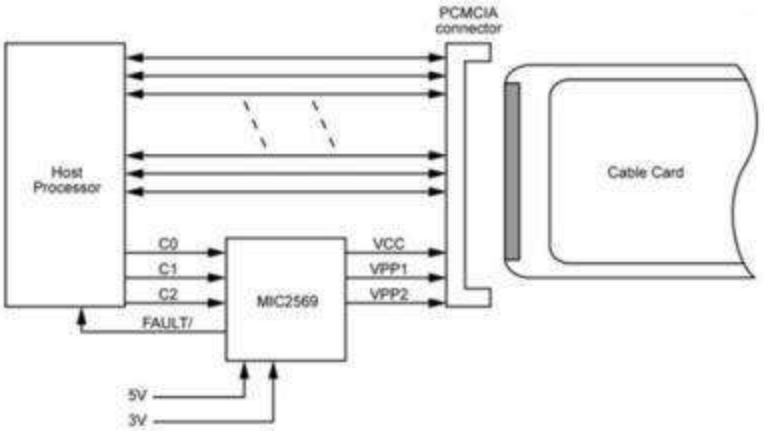

<< BACK

MIC2557

PCMCIA Card Socket V_{PP} Switching Matrix

Online Datasheet

Features:

- Complete PCMCIA VPP Switch Matrix in –
  - a Single IC
- No External Components Required
- Digital Selection of 0V, VCC, VPP, or High –
  - Impedance Output
- No VPP OUT Overshoot or Switching –
  - Transients
- Break-Before-Make Switching
- Low Power Consumption
- 120mA VPP (12V) Output Current
- Optional Active Source Clamp for Zero Volt Condition
- 3.3V or 5V Supply Operation
- 8-Pin SOIC Package

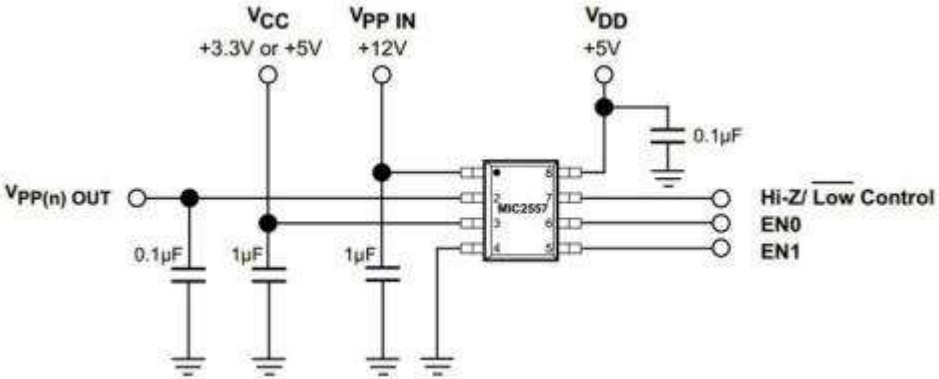

<< BACK

MIC2563A

Dual-Slot PCMCIA/CardBus Power Controller

Online Datasheet

Features:

- Single package controls two PC Card slots
- High-efficiency, low-resistance switches require no 12V –
  - bias supply
- No external components required
- Output current limit and overtemperature shutdown
- Ultra-low power consumption
- Complete dual-slot PC Card/CardBus VCC and VPP –
  - switch matrix in a single package
- Logic compatible with industry standard PC Card logic –
  - controllers
- No voltage shoot-through or switching transients
- Break-before-make switching
- Digital selection of VCC and VPP voltages
- Over 1A VCC output current for each section
- Over 250mA VPP output current for each section
- Lead-free 28-pin SSOP package

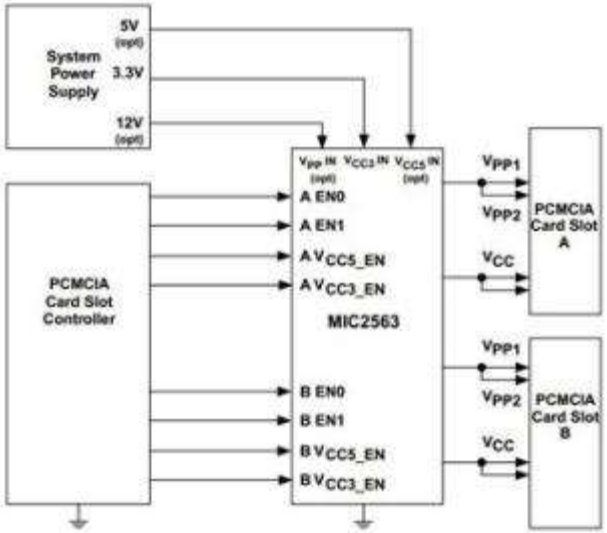

<< BACK

MIC2558

PCMCIA Dual Card Socket V_{PP} Switching Matrix

Online Datasheet

Features:

- Complete PCMCIA VPP Switch Matrix in a –
  - Single IC
- Dual Matrix allows independent VPP1 and VPP2
- Digital Selection of 0V, VCC, VPP, or High –
  - Impedance Output
- No VPPOUT Overshoot or Switching Transients
- Break-Before-Make Switching
- Ultra Low Power Consumption
- 120mA VPP (12V) Output Current
- Optional Active Source Clamp for Zero Volt –
  - Condition
- 3.3V or 5V Supply Operation
- 14-Pin SOIC Package

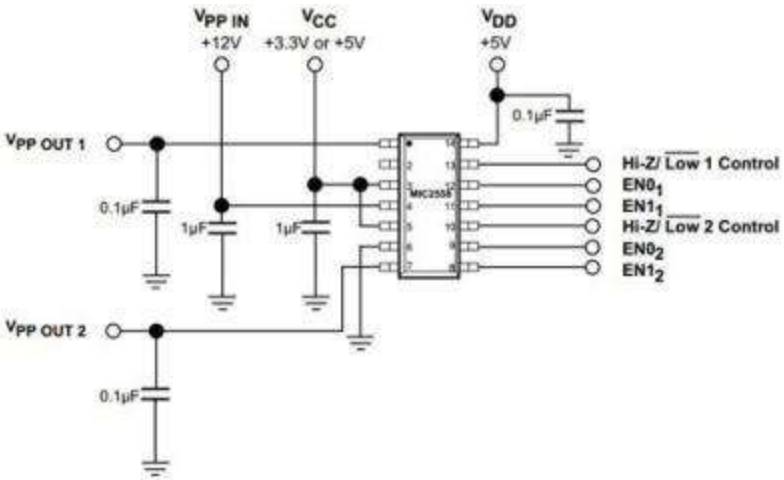

<< BACK

LM4040/1C

Precision Micropower Shunt Voltage Reference

Online Datasheet

Features:

- Initial Accuracy: 0.5%
- Small SOT-23 package
- No output capacitor required
- Tolerates capacitive loads
- Fixed reverse breakdown voltages of 2.5V, 4.096V –
  - and 5.0V (LM4040)
- 1.225V or Adjustable reverse breakdown versions –
  - (LM4041)

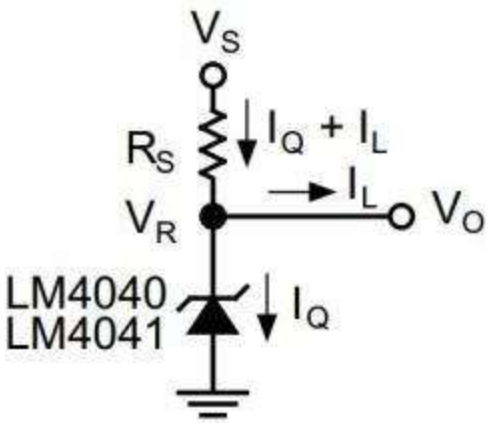

<< BACK

LM4040/1D

Precision Micropower Shunt Voltage Reference

Online Datasheet

Features:

- Initial Accuracy: 1%
- Small SOT-23 package
- No output capacitor required
- Tolerates capacitive loads
- Fixed reverse breakdown voltages of 2.5V, 4.096V – and 5.0V (LM4040)
- 1.225V or Adjustable reverse breakdown versions – - (LM4041)

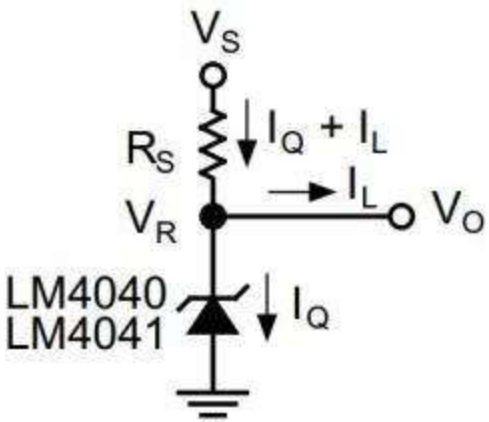

<< BACK

MIC4043

Low-Voltage Secondary-Side Shunt Regulator

Online Datasheet

Features:

- Ideal for 1.8V switching converters
- Low-voltage operation: 400mV –
  - maximum saturation over operating –
  - temperature range
- Easy to use: voltage in, current out
- 2% voltage tolerance over operating –
  - temperature range

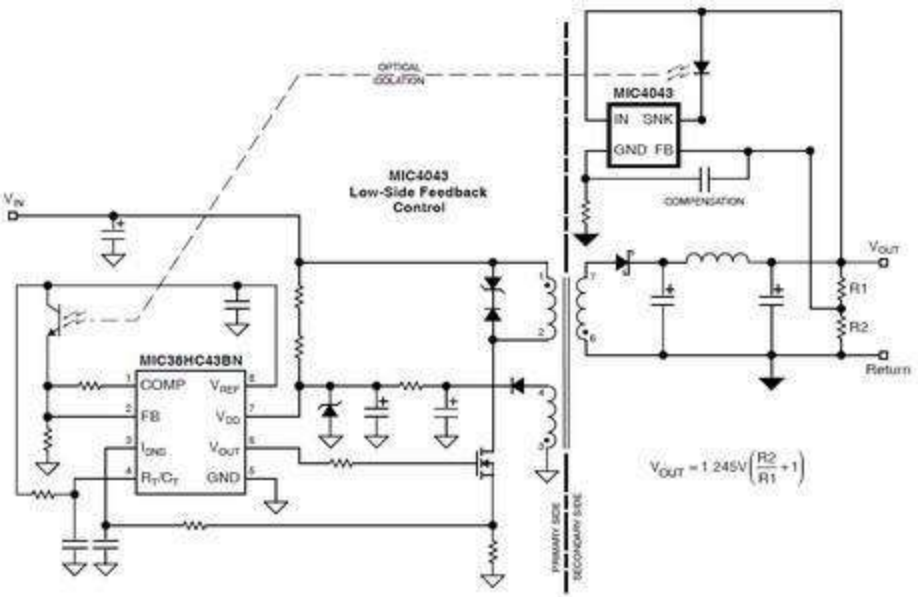

<< BACK

MIC6270

IttyBitty® Comparator

Online Datasheet

Features:

- 2V to 36V supply
- 300µA supply current independent of supply
- 25nA input bias current
- ±5nA input offset current
- ±3mV input offset voltage
- Input common-mode voltage range includes ground
- 250mV at 4mA output saturation voltage
- Differential input voltage range equal to the power – - supply voltage
- Output compatible with TTL, DTL, ECL, MOS, and – - CMOS logic

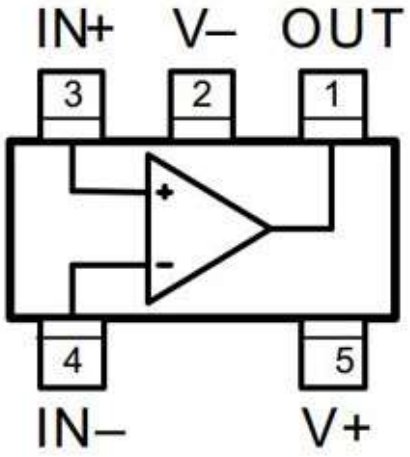

5-Pin SOT-23 (M5)

<< BACK

MIC7211/21

IttyBitty® Rail-to-Rail Input Comparator

Online Datasheet

Features:

- Small footprint SOT-23-5 package
- Guaranteed performance at 2.2V, 2.7V, -- 5V, and 10V
- 7µA typical supply current at 5V
- <5µs response time at 5V
- Push-pull output (MIC7211)
- Open-drain output (MIC7221)
- Input voltage range may exceed supply -- voltage by 0.3V
- >100mA typical sink or source

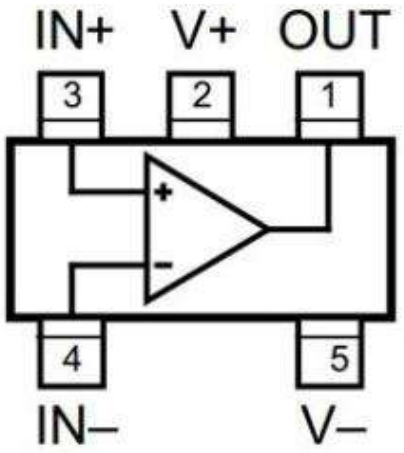

SOT-23-5 (M5)

<< BACK

MIC833

Comparator and Reference with Adj. Hystersis

Online Datasheet

Features:

- Optimized for PDAs, cellular telephones, -
  - pagers, and other battery-powered devices
- Inputs and output can pulled up to 6V -
  - regardless of supply voltage
- Independently adjustable high- and low -
  - voltage thresholds
- High ±1.5% voltage threshold accuracy
- Extremely low 1µA typical supply current
- Immune to brief input transients
- 5-lead SOT-23 package

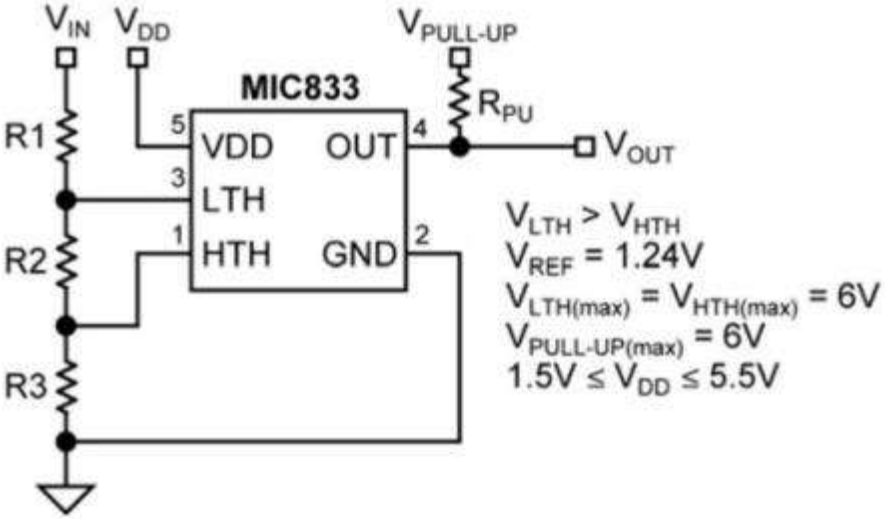

<< BACK

MIC841/2

Comparator with 1.25% Reference & Adjustable Hysteresis

Online Datasheet

Features:

- 1.5V to 5.5V operating range
- 1.5µA typical supply current
- ±1.25% voltage threshold accuracy
- 10nA maximum input leakage current over temperature
- Externally adjustable hysteresis (MIC841)
- Internal 20mV hysteresis (MIC842)
- Output options:
  - Push-pull, active high
  - Push-pull, active low
  - Open drain, active low
- Immune to brief input transients
- Teeny™ 5-pin SC-70 package
- 6-pin 1.6mm x 1.6mm TDFN (MIC841)
- 4-pin 1.2mm x 1.6mm TDFN (MIC842)

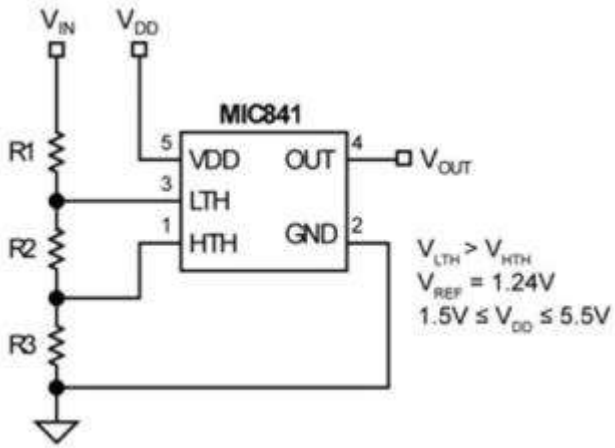

<< BACK

MIC6211

IttyBitty® Operational Amplifier

Online Datasheet

Features:

- 4V to 32V operation
- Small footprint package
- Unity gain stable
- 2.5 MHz unity gain bandwidth
- 6V/µs typical slew rate
- Short circuit protected

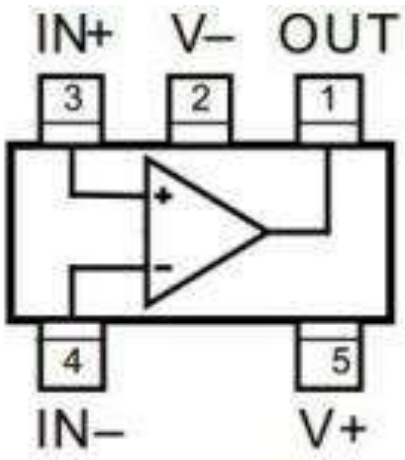

SOT-23-5 (M5)

<< BACK

LMC7101

Low-Power Operational Amplifier

Online Datasheet

Features:

- Small footprint SOT-23-5 package
- Guaranteed 2.7V, 3V, 5V, and 12V performance
- 500kHz gain-bandwidth
- 0.01% total harmonic distortion at 10kHz (5V, 2kΩ)
- 0.5mA typical supply current at 5V

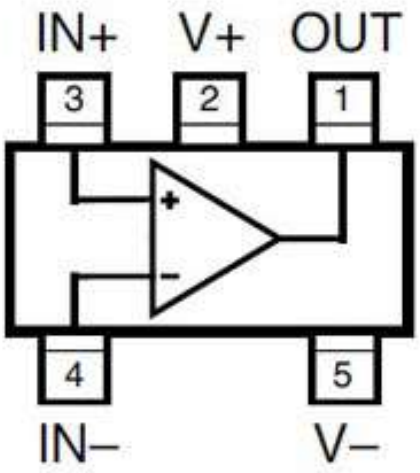

SOT-23-5 (M5)

<< BACK

MIC7111

1.8V IttyBitty® Rail-to-Rail Input/Output Op Amp

Online Datasheet

Features:

- Output swing to within 1mV of rails with 1.8V supply and -- 100kΩ load
- Small footprint SOT-23-5 package
- Guaranteed performance at 1.8V, 2.7V, 5V, and 10V
- 15µA typical supply current at 1.8V
- 25kHz gain-bandwidth at 5V
- Suitable for driving capacitive loads

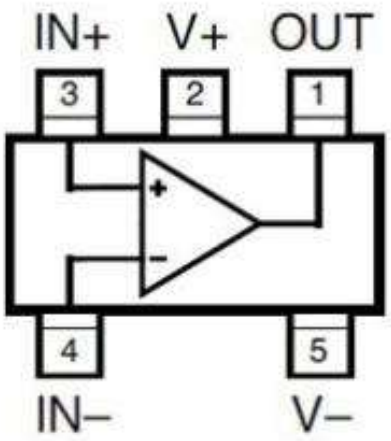

SOT-23-5 (M5)

<< BACK

MIC7300

High-Output Drive Rail-to-Rail Op Amp

Online Datasheet

Features:

- Output swing to within 1mV of rails with 1.8V supply and –- 100kΩ load
- Small footprint SOT-23-5 package
- Guaranteed performance at 1.8V, 2.7V, 5V, and 10V
- 15µA typical supply current at 1.8V
- 25kHz gain-bandwidth at 5V
- Suitable for driving capacitive loads

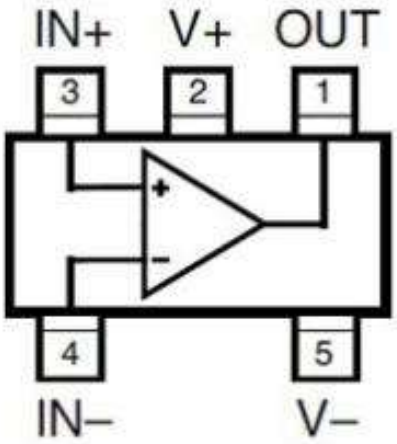

SOT-23-5 (M5)

<< BACK

MIC860

Teeny™ Ultra-Low Power Op Amp

Online Datasheet

Features:

- Teeny™ SC70 packaging
- 4MHz gain-bandwidth product
- 30µA supply current
- Rail-to-rail output
- Ground sensing at input common mode to GND
- Common mode to GND
- Drive large capacitive loads

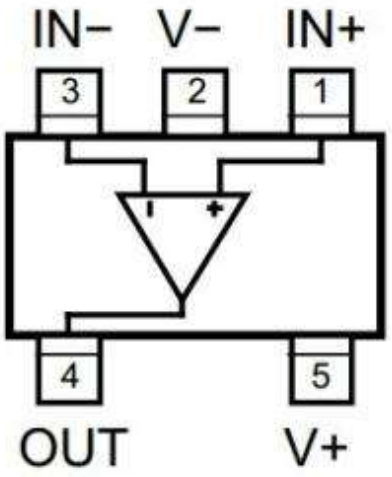

<< BACK

MIC861

Teeny™ Ultra-Low Power Op Amp

Online Datasheet

Features:

- Teeny™ SC70 packaging
- 400kHz gain-bandwidth product
- 650kHz, -3dB bandwidth
- 4.6µA supply current
- Rail-to-Rail output
- Ground sensing at input (common mode to GND)
- Drives large capactive loads (1000pF)
- Unity gain stable

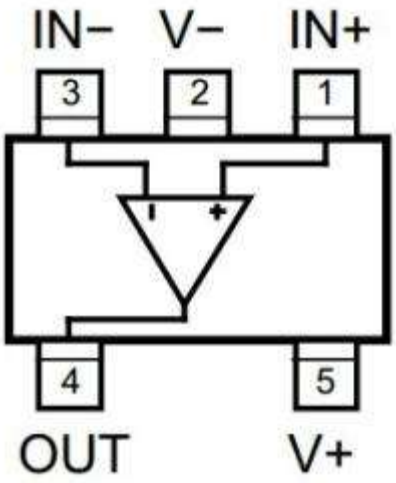

<< BACK

MIC7122

Rail-to-Rail Dual Op Amp

Online Datasheet

Features:

- Small footprint MSOP-8 package
- 350µA supply current per op amp at 2.2V supply
- Guaranteed 2.2V, 5V, and 15V performance
- 750kHz gain-bandwidth product at 2.2V supply
- 0.01% total harmonic distortion at 1kHz (15V, 2kΩ)
- Drives 200pF at 5V and greater supply voltages

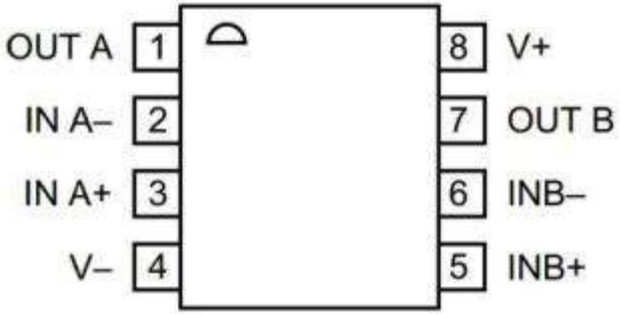

MSOP-8 (MM)

<< BACK

MIC862

Dual Ultra Low Power Op Amp in SOT23-8

Online Datasheet

Features:

- SOT23-8 packaging
- 3MHz gain-bandwidth product
- 5MHz, -3dB bandwidth
- 31µA supply current
- Rail-to-rail output
- Ground sensing at input (common mode –
  - to GND)
- Drive large capactive loads
- Unity gain stable

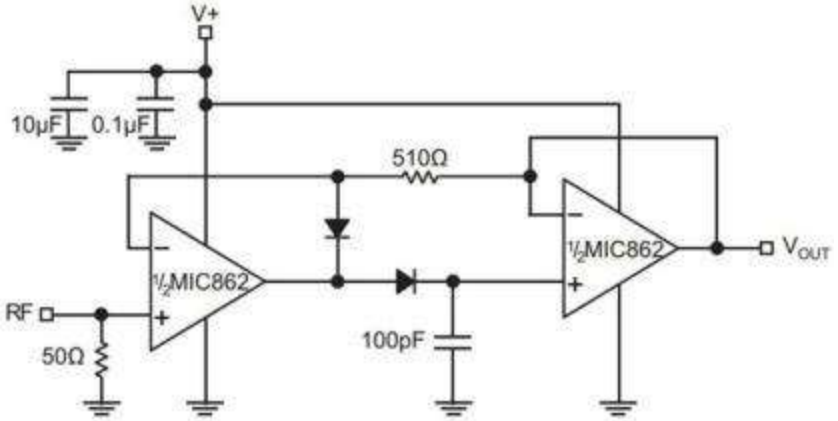

<< BACK

MIC863

Dual Ultra Low Power Op Amp in SOT23-8

Online Datasheet

Features:

- SOT23-8 packaging
- 450kHz gain-bandwidth product
- 800kHz, -3dB bandwidth
- 4.2µA supply current/channel
- Rail-to-rail output
- Ground sensing at input (common mode to GND)
- Drives large capactive loads (0.02µF)
- Unity gain stable

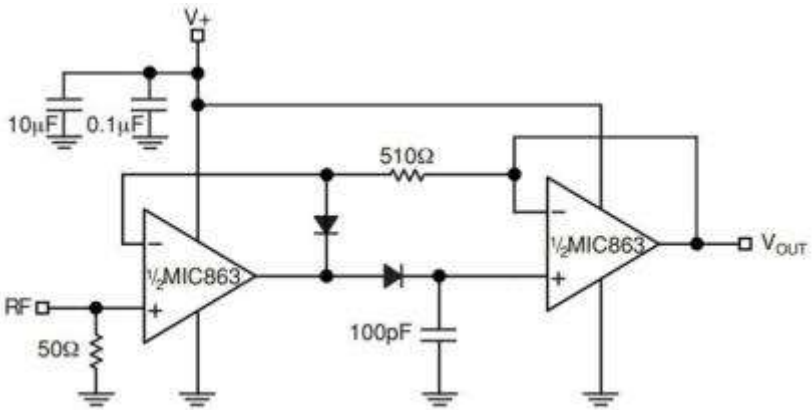

<< BACK

MIC920

80MHz Low-Power SC-70 Op Amp

Online Datasheet

Features:

- Gain Bandwidth Product: 80 MHz (typical)
- Supply Current: 550 µA (typical)
- Input Offset Voltage (max): ±5 mV
- Supply Voltage: ±2.5V to ±9V
- Phase Margin: 32° (typ.)
- Short Circuit Current: 63 mA (typical)
- Noise: 11 nV/√Hz (typical, at 10 kHz)
- Slew Rate: 3000 V/µs (typical)
- Industrial Temperature Range: -40°C to +85°C
- Packages: SC-70

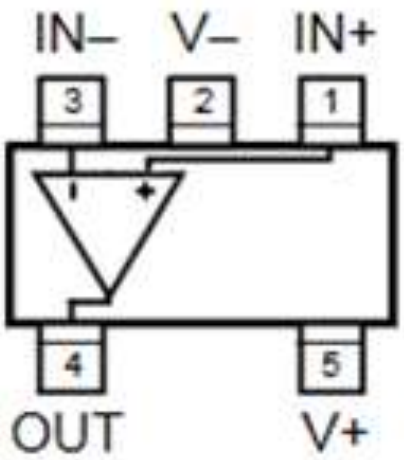

<< BACK

MIC1555

IttyBitty® RC Timer / Oscillator

Online Datasheet

Features:

- +2.7V to +18V operation
- Low current
- <1µA typical shutdown mode (MIC1557)
- 200µA typical (TRG and THR low) at 3V supply
- Timing from microseconds to hours
- "Zero" leakage trigger and threshold inputs
- 50% square wave with one Resistor, one Capacitor
- Threshold input precedence over trigger input
- <15Ω output on resistance
- No output cross-conduction current spikes
- <0.005%/°C temperature stability
- <0.055%/V supply stability
- SOT-23-5 package

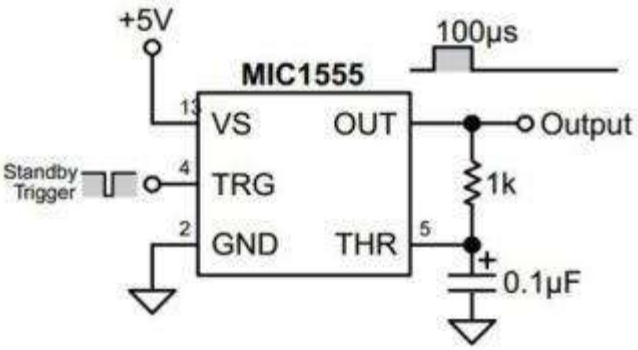

Monostable (One-Shot)

<< BACK

MIC1557

IttyBitty® RC Timer / Oscillator

Online Datasheet

Features:

- +2.7V to +18V operation
- Low current
- <1µA typical shutdown mode (MIC1557)
- 200µA typical (TRG and THR low) at 3V supply
- Timing from microseconds to hours
- “Zero" leakage trigger and threshold inputs
- 50% square wave with one Resistor, one Capacitor
- Threshold input precedence over trigger input
- <15Ω output on resistance
- No output cross-conduction current spikes
- <0.005%/°C temperature stability
- <0.055%/V supply stability
- SOT-23-5 package

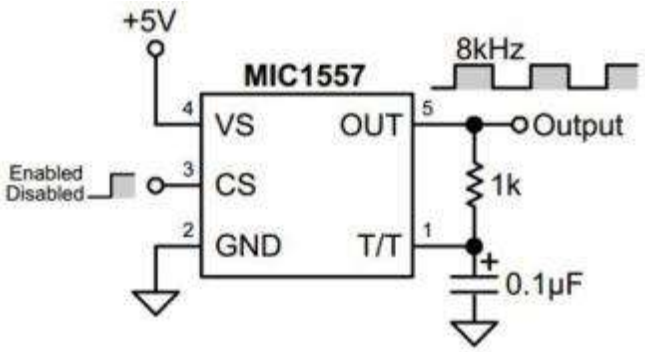

Astable (Oscillator)

<< BACK

MAQ3203

High Brightness LED Driver with High-Side Current Sense

Online Datasheet

Features:

- AEC-Q100 qualified
- 4.5V to 42V input voltage range
- High efficiency (>90%)
- ±5% LED current accuracy
- Dither enabled for low EMI
- High-side current sense
- Dedicated dimming control input
- Hysteretic control (no compensation)
- Up to 1.5MHz switching frequency
- Adjustable constant LED current
- Over-temperature protection
- -40ºC to +125ºC junction temperature range

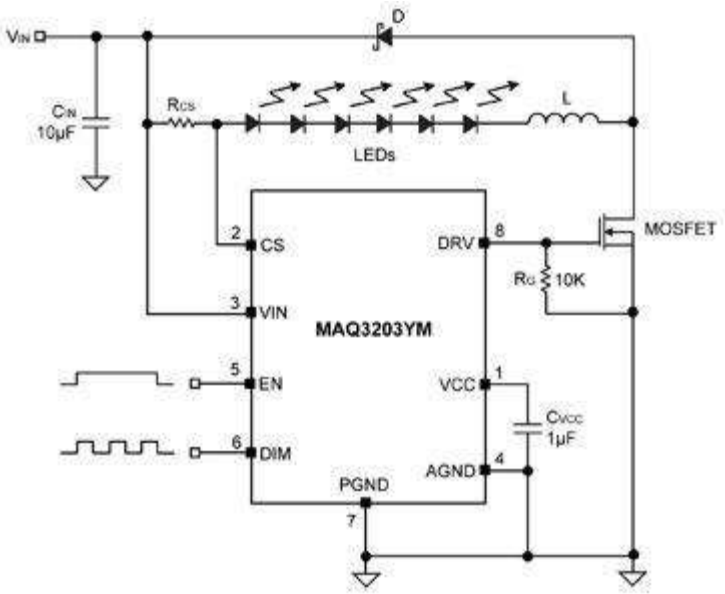

<< BACK

MIC3203 / MIC3203-1

High-Brightness LED Driver Controller with High-Side Current Sense

Online Datasheet

Features:

- 4.5V to 42V input voltage range
- High efficiency (>90%)
- ±5% LED current accuracy
- MIC3203: Dither enabled for low EMI
- MIC3203-1: Dither disabled
- High-side current sense
- Dedicated dimming control input
- Hysteretic control (no compensation required)
- Up to 1.5MHz switching frequency
- Adjustable constant LED current
- Over-temperature protection
- -40ºC to +125ºC junction temperature range

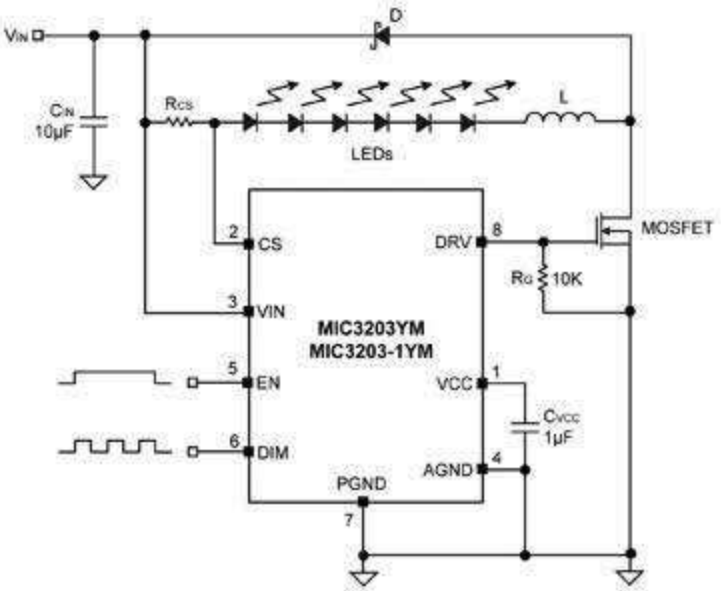

<< BACK

MIC3230/1/2

Constant Current Boost Controller for Driving High Power LEDs

Online Datasheet

Features:

- 6V to 45V input supply range
- Capable of driving up to 70W
- Ultra-low EMI via dithering (MIC3231)
- Programmable LED drive current
- Feedback voltage = 250mV ±3%
- Programmable switching frequency –
  - (MIC3230/1) or 400kHz fixed frequency –
  - operation (MIC3232)
- PWM dimming and separate enable shutdown
- Frequency synchronization with other MIC3230s
- Protection features:
- Over voltage protection (OVP)
- Over-temperature protection
- Under voltage lockout (UVLO)
- -40ºC to +125ºC junction temperature range

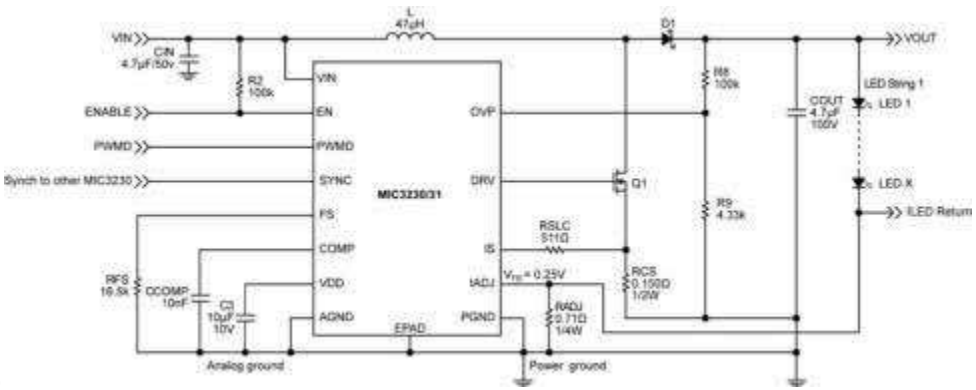

<< BACK

MIC3201

High Brightness LED Driver with High-Side Current Sense

Online Datasheet

Features:

- 6.0V to 20V input voltage range
- High efficiency (>90%)
- ±5% LED current accuracy
- High-side current sense
- Dedicated dimming control input
- Hysteretic control (no compensation!)
- 1A internal power switch
- Up to 1MHz switching frequency
- Adjustable constant LED current
- 5V on board regulator
- Over-temperature protection
- -40ºC to +125ºC Junction temperature range
- Available in an 8-Pin ePad SOIC package

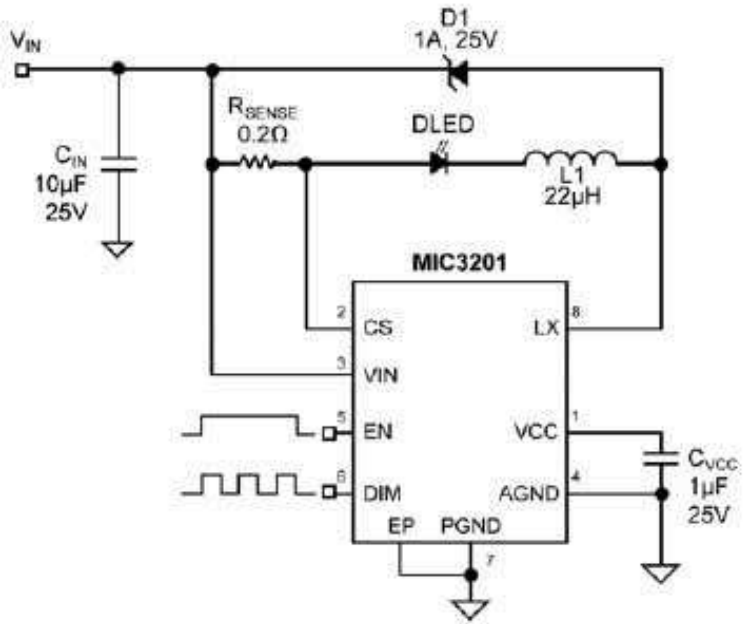

<< BACK

MIC3202/-1

High-Brightness LED Driver w/Integrated MOSFET and High-Side Current Sense

Online Datasheet

Features:

- 6V to 37V input voltage range
- High efficiency (>90%)
- ±5% LED current accuracy
- MIC3202: Dither enabled for low EMI
- MIC3202-1: Dither disabled
- High-side current sense (up to 1A)
- Dedicated dimming control input
- Hysteretic control (no compensation required)
- Up to 1MHz switching frequency
- Adjustable constant LED current
- Over-temperature protection
- -40ºC to +125ºC junction temperature range

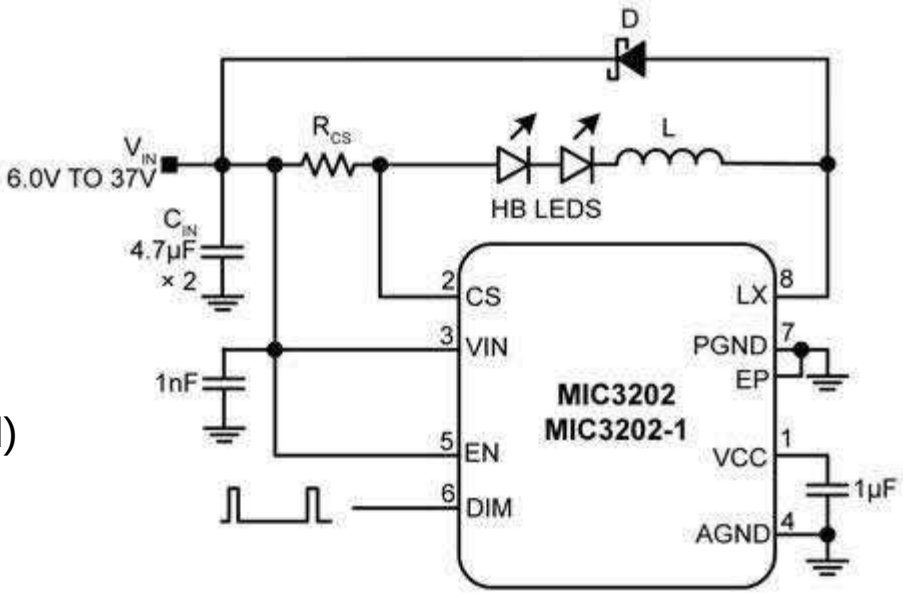

<< BACK

MIC5019

Ultra Small High-Side N-Channel MOSFET Driver with Integrated Charge Pump

Online Datasheet

Features:

- 4-pin 1.2mm x 1.2mm Thin QFN Package
- +2.7V to +9V supply voltage range
- 16V gate drive at VDD = 9V
- 8V gate drive at VDD = 2.7V
- Operates in low and high side configurations
- 150µA (typical) supply current at VDD = 5V
- <1µA shutdown supply current
- -40ºC to +125ºC Junction Temperature Range

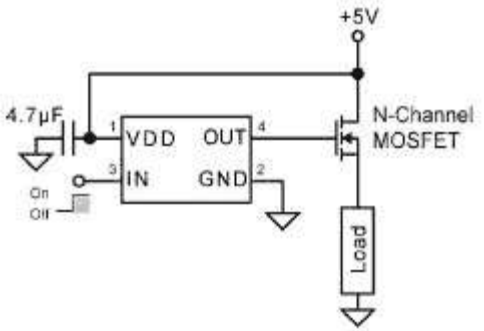

Low-Voltage High-Side Power Switch

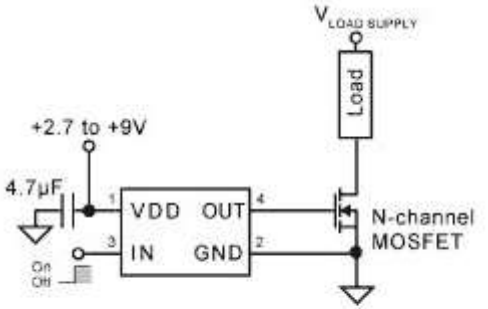

Low-Side Power Switch

<< BACK

MIC5018

IttyBitty® High-Side MOSFET Driver

Online Datasheet

Features:

- +2.7V to +9V operation
- 150µA typical supply current at 5V supply
- ≤1µA typical standby (off) current
- Charge pump for high-side low-voltage applications
- Internal zener diode gate-to-ground MOSFET –
  - protection
- Operates in low- and high-side configurations
- TTL compatible input
- ESD protected

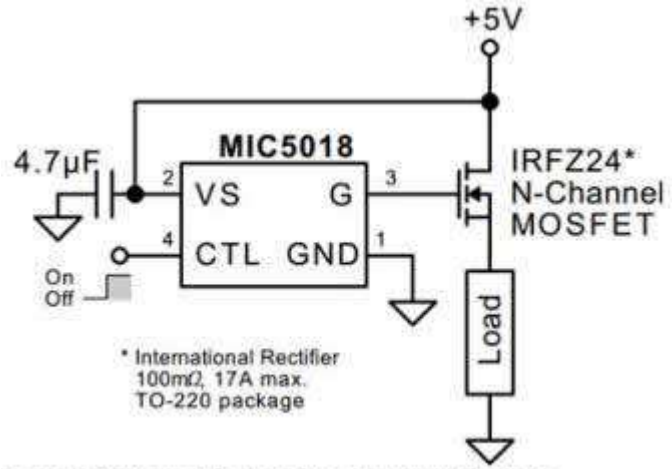

Low-Voltage High-Side Power Switch

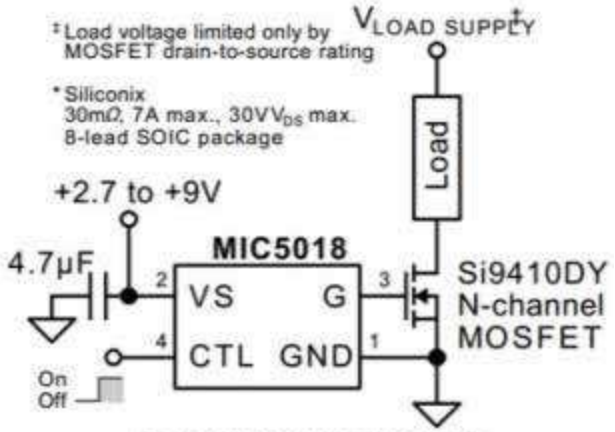

Low-Side Power Switch

<< BACK

MIC5060

Small High-Side MOSFET Driver

Online Datasheet

Features:

- 2.75V to 30V operation
- 100µA maximum supply current (5V supply)
- 15µA typical off-state current
- Internal charge pump
- TTL-compatible input
- Withstands 60V transient (load dump)
- Reverse battery protected to -20V
- Inductive spike protected to -20V
- Overvoltage shutdown at 35V
- Internal 15V gate protection
- Minimum external parts
- Operates in high-side or low-side configurations
- 1µA control input pull-off
- Available in 8-pin 3mm x 3mm MLF® package

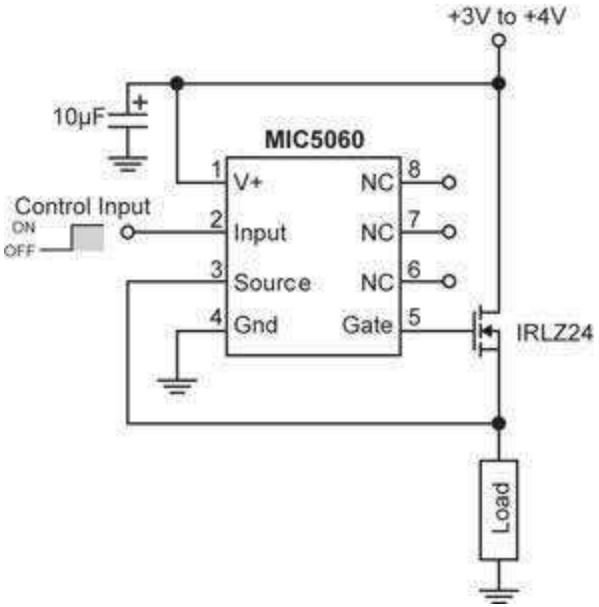

<< BACK

MIC5014/15

Low-Cost High- or Low-Side MOSFET Driver

Online Datasheet

Features:

- +2.75V to +30V operation
- 100µA maximum supply current (5V supply)
- 15µA typical off-state current
- Internal charge pump
- TTL compatible input
- Withstands 60V transient (load dump)
- Reverse battery protected to –20V
- Inductive spike protected to –20V
- Overvoltage shutdown at 35V
- Internal 15V gate protection
- Minimum external parts
- Operates in high-side or low-side configurations
- 1µA control input pull-off
- MIC5015: Inverting
- MIC5014: Non-inverting versions

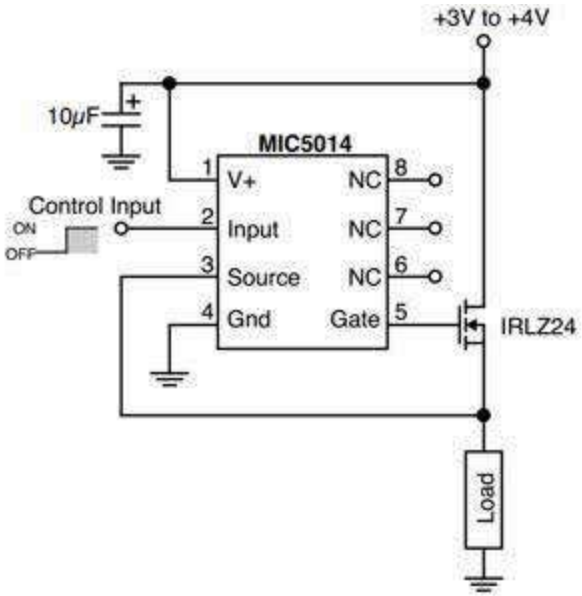

<< BACK

MIC5013

Protected High- or Low-Side MOSFET Driver

Online Datasheet

Features:

- +7.0V to +32V operation
- Less than 1µA current in the "off" state
- Internal charge pump to drive the gate of an N – - channel power FET above supply
- Available in small outline SOIC packages
- Internal zener clamp for gate protection
- 60µs typical turn-on time to 50% gate overdrive
- Programmable over-current sensing
- Dynamic current threshold for high in-rush loads
- Fault output pin indicates current faults
- Implements high- or low-side switches

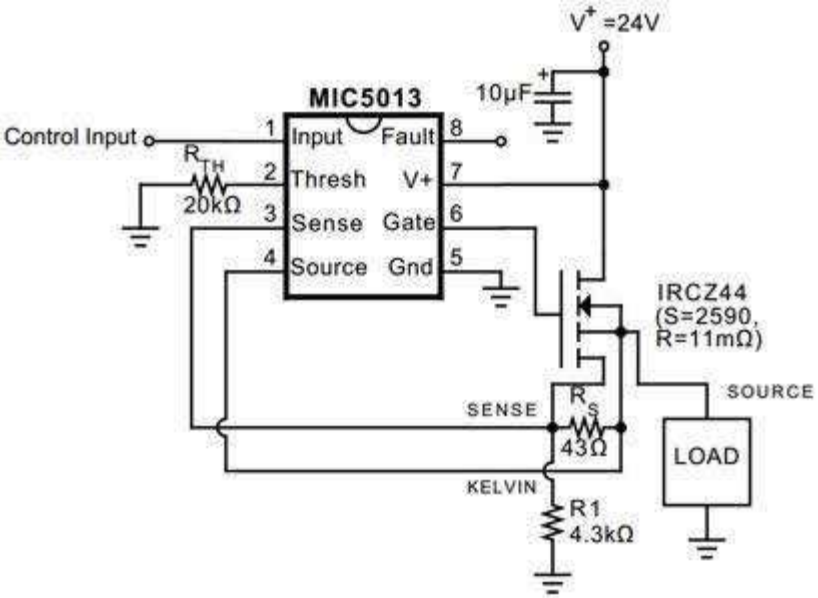

<< BACK

MIC5011

Minimum Parts High- or Low-Side MOSFET Driver

Online Datasheet

Features:

- +4.75V to +32V operation
- Less than 1µA current in the "off" state
- Internal charge pump to drive the gate of an N-channel – power FET above supply
- Available in small outline SOIC packages
- Internal zener clamp for gate protection
- Minimum external parts count
- Can be used to boost drive to low-side power FETs – - operating on logic supplies
- 25µs typical turn-on time with optional external – - capacitors
- Implements high- or low-side drivers

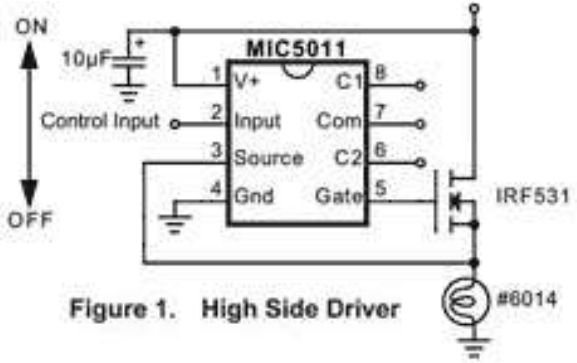

Figure 1. High Side Driver

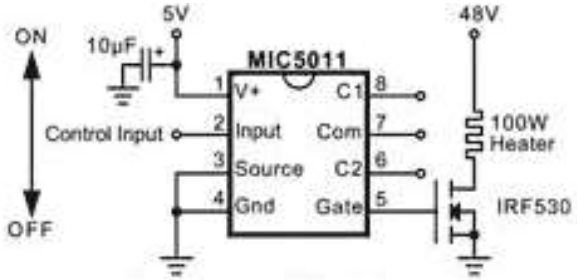

Figure 2. Low Side Driver

<< BACK

MIC5020

Current-Sensing Low-Side MOSFET Driver

Online Datasheet

Features:

- 11V to 50V operation
- 175ns rise/fall time driving 2000pF
- TTL compatible input with internal pull –
  - down resistor
- Overcurrent limit
- Fault output indication
- Gate to source protection
- Compatible with current sensing –
  - MOSFETs

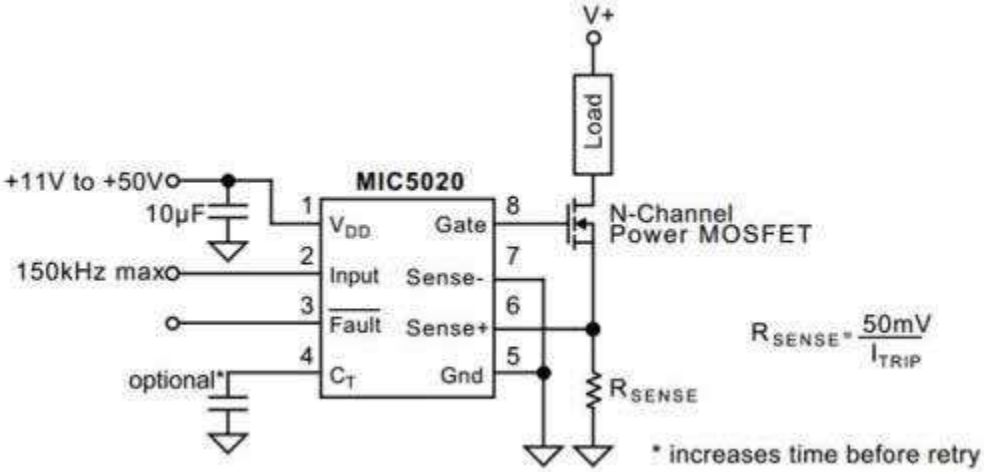

<< BACK

MIC4120/9

6A-Peak Low-Side MOSFET Driver Bipolar/CMOS/DMOS Process

Online Datasheet

Features:

- Latch-up protected: will withstand >200mA –
  - reverse output current
- Logic input withstands negative swing of up to 5V
- Matched rise and fall times of 25ns
- High peak output current at 6A
- Wide operating range from 4.5V to 20V
- High capacitive load drive of 10,000pF
- Logic high input for any voltage from 2.4V to VS
- Low equivalent input capacitance (typ) at 6pF
- Low supply current is 450µA with logic 1 input
- Low output impedance is 2.5Ω
- Output voltage swing within 25mV of ground or VS
- Exposed backside pad packaging reduces heat
  - ePad SOIC-8L (θJA = 58°C/W)
  - 3mm x 3mm MLF®-8L (θJA = 60°C/W)

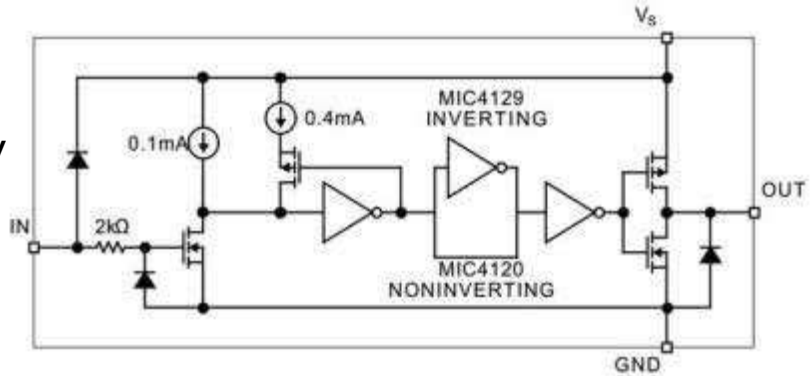

<< BACK

MIC44F18/19/20

6A High Speed MOSFET Drivers in 2mm x 2mm Package

Online Datasheet

Features:

- 4.5V to 13.2V input operating range
- 6A peak output current
- High accuracy ±5% enable input threshold
- High speed switching capability:
  - 10ns rise time in 1000pF load
  - <15ns propagation delay time
- Flexible UVLO function:
  - 4.2V internally set UVLO
  - Programmable with external resistors
- Latch-up protection to >500mA reverse current on the output pin
- Enable function
- Thermally enhanced ePad MSOP-8 package option
- Miniature 2mm x 2mm MLF®-8 package option
- Pb-free packaging

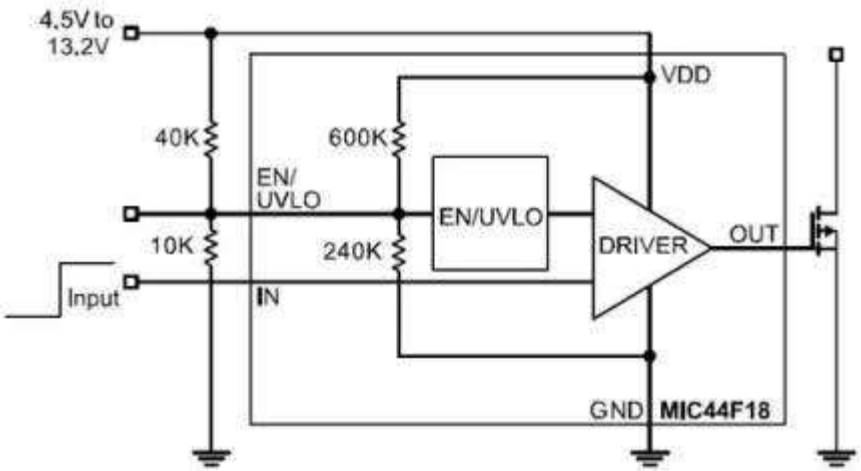

<< BACK

MIC4451/2

12A Peak Low-Side MOSFET Driver Bipolar/CMOS/DMOS Process

Online Datasheet

Features:

- BiCMOS/DMOS construction
- Latch-up proof: fully isolated process is –
  - inherently immune to any latch-up.
- Input will withstand negative swing of up to 5V
- Matched rise and fall times 25ns
- High peak output current 12A peak
- Wide operating range 4.5V to 18V
- High capacitive load drive 62,000pF
- Low delay time 30ns typ.
- Logic high input for any voltage from 2.4V to VS
- Low equivalent input capacitance (typ.) 7pF
- Low supply current 450µA with logic 1 input
- Low output impedance 1.0Ω
- Output voltage swing to within 25mV of ground or VS

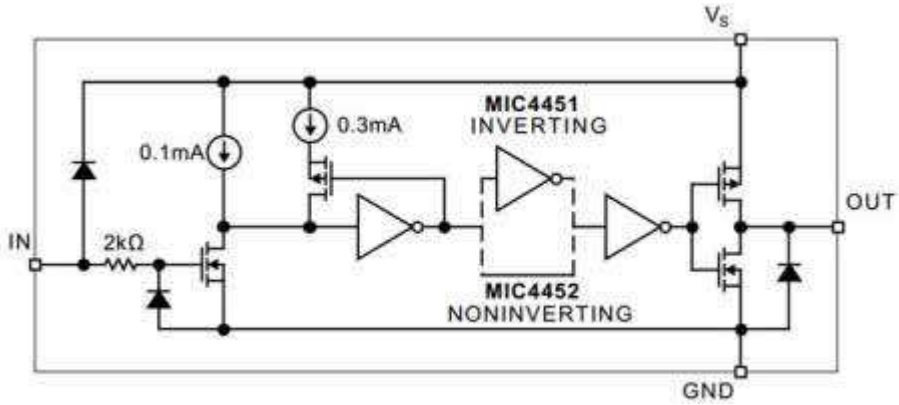

<< BACK

MIC4421A/2A

12A Peak Low-Side MOSFET Driver Bipolar/CMOS/DMOS Process

Online Datasheet

Features:

- High peak-output current: 9A peak (typ.)
- Wide operating range: 4.5V to 18V (typ.)
- Minimum pulse width: 50ns
- Input will withstand negative swing of up to 5V
- High capacitive load drive: 47,000pF
- Low delay time: 15ns (typ.)
- Logic high input for any voltage from 2.4V to VS
- Low equivalent input capacitance (typ.): 7pF
- Low supply current: 500µA (typ.)
- Latch-up proof: fully isolated process is inherently –
  - immune to any latch-up.
- Output voltage swing to within 25mV of ground or VS

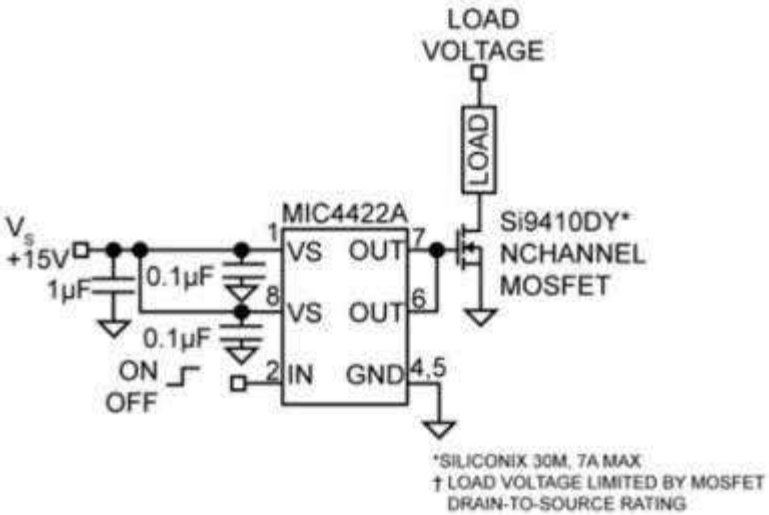

<< BACK

MIC4420/9

6A-Peak Low-Side MOSFET Driver Bipolar/CMOS/DMOS Process

Online Datasheet

Features:

- CMOS construction
- Latch-up protected: will withstand >500mA –
  - reverse output current
- Logic input withstands negative swing of up to 5V
- Matched rise and fall times of 25ns
- High peak output current at 6A
- Wide operating range from 4.5V to 18V
- High capacitive load drive of 10,000pF
- Low delay time of 55ns typical
- Low delay time 55ns typ.
- Logic high input for any voltage from 2.4V to VS
- Low equivalent input capacitance (typ.) 6pF
- Low supply current 450µA with logic 1 input
- Low output impedance 2.5Ω
- Output voltage swing within 25mV of ground or VS

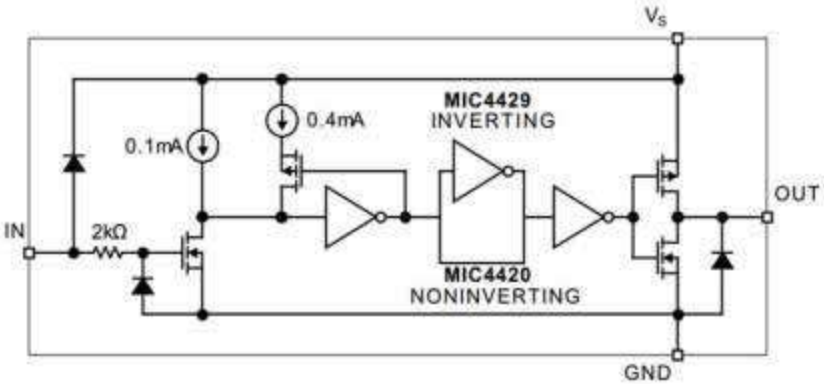

<< BACK

MCP14A0601/2

6A MOSFET Driver with Low Threshold Input and Enable

Online Datasheet

Features:

- Peak Output Current: 6 A (typical)
- Wide Supply Voltage Range: 4.5 V to 18 V
- Low Shoot-Through/Cross-Conduction Current –
  - in Output Stage
- High Capacitive Load Drive Capability:
  - 2500 pF in 10 ns (typ.)
  - Short Delay: 22 ns (tD1), 22 ns (tD2) (typ.)
- Low Supply Current: 375 µA (typ.)
- Low Voltage Threshold Input and Enable
  - Hysteresis: 1.2 to 1.6 V
- Latch-Up Protected:
  - Withstands 500 mA Reverse Current
- Small Packages:
  - 8- Lead MSOP
  - 8- Lead SOIC
  - 8- Lead 2x3 TDFN

Package Types

MCP14A0601/MCP14A0602
MSOP/SOIC

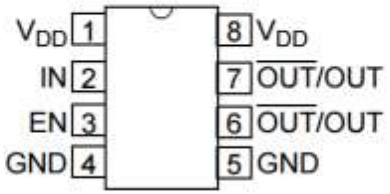

MCP14A0601/MCP14A0602
2 x 3 TDFN*

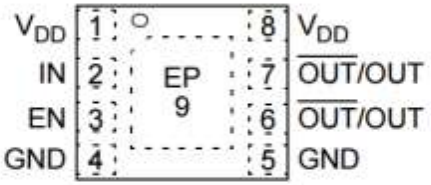

* Includes Exposed Thermal Pad (EP); see Table 3-1.

<< BACK

MCP14A0451/2

4.5A MOSFET Driver with Low Threshold Input and Enable

Online Datasheet

Features:

- Peak Output Current: 4.5 A (typical)
- Wide Supply Voltage Range: 4.5 V to 18 V
- Low Shoot-Through/Cross-Conduction –
  - Current in Output Stage
- High Capacitive Load Drive Capability:
  - 2200 pF in 9.5 ns (typ.)
  - Short Delay: 16 ns (tD1), 19.5 ns (tD2) –
    - (typ.)
- Low Supply Current: 355 µA (typ.)
- Low Voltage Threshold Input and Enable
  - Hysteresis: 1.2 to 1.6 V
- Latch-Up Protected:
  - Withstands 500 mA Reverse Current
- Small Packages:
  - 8- Lead MSOP
  - 8- Lead SOIC
  - 8- Lead 2x2 WDFN

Package Types

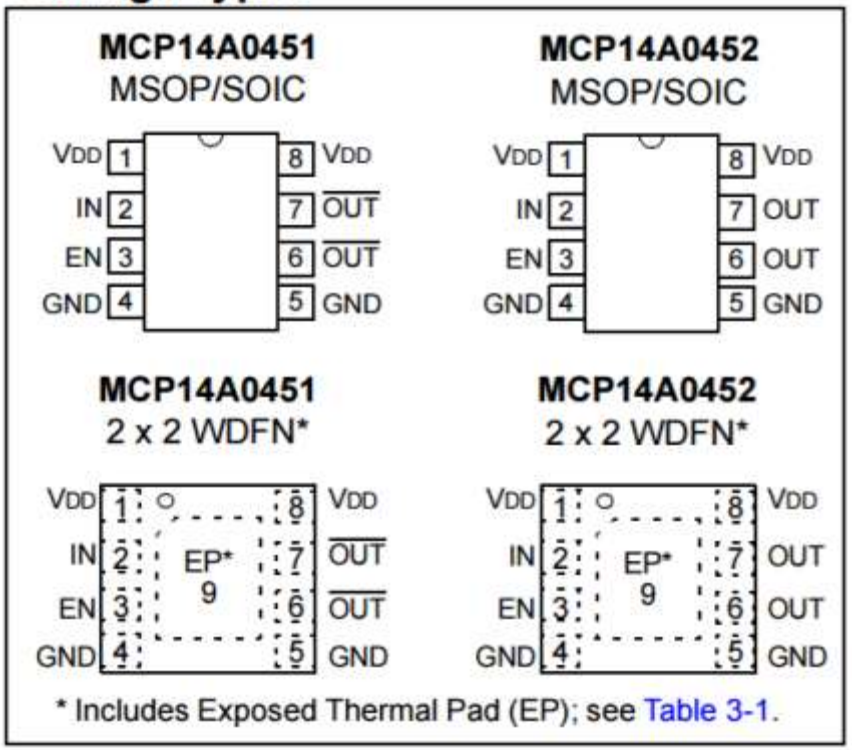

* Includes Exposed Thermal Pad (EP); see Table 3-1.

<< BACK

MCP1406/7

6A High-Speed Power MOSFET Drivers

Online Datasheet

Features:

- High Peak Output Current: 6.0A (typ.)
- Wide Input Supply Voltage Operating Range:
  - 4.5V to 18V
- High Capacitive Load Drive Capability:
  - 2500pF in 20ns
  - 6800pF in 40ns
- Short Delay Times: 40ns (typ.)
- Matched Rise/Fall Times
- Low Supply Current:
  - With Logic '1' Input: 130µA (typ.)
  - With Logic '0' Input: 35µA (typ.)
- Latch-Up Protected: Will Withstand 1.5A
- Reverse Current
- Logic Input Will Withstand Negative
- Swing up to 5V
- Pin compatible with the TC4420/TC4429
- Space-saving 8-Pin SOIC, PDIP and 8-Pin
- 6x5 DFN Packages

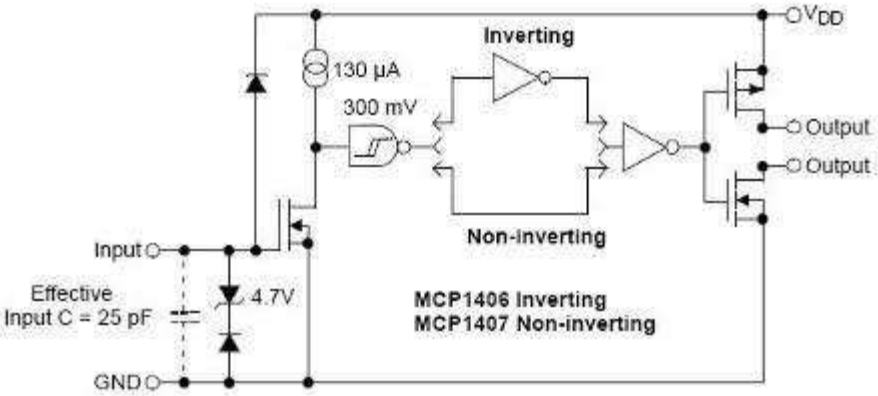

<< BACK

MIC4414/5

1.5A 4.5V to 18V Low-Side MOSFET Driver

Online Datasheet

Features:

- Ultra-small 4-pin 1.2mm x 1.2mm thin QFN –
  - package
- +4.5V to +18V operating supply voltage range
- 1.5A peak current
  - 3.5Ω output resistance at 18V
  - 9Ω output resistance at 5V
- Low steady-state supply current
  - 77µA control input low
  - 445µA control input high
- 12ns rise and fall times into 1000pF load
- MIC4414 (non-inverting)
- MIC4415 (inverting)
- -40ºC to +125ºC junction temperature
- MIC4414 (non-inverting)
- MIC4415 (inverting)

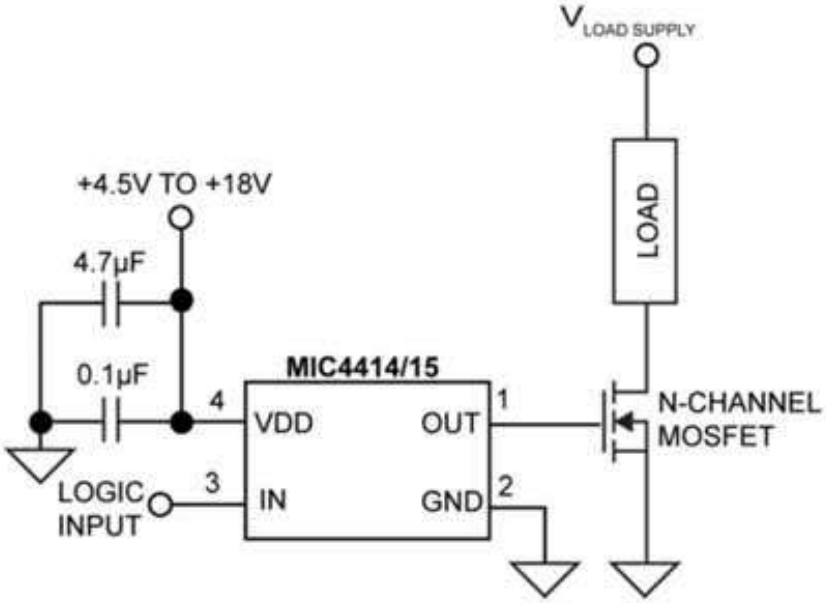

<< BACK

MIC4416/7

IttyBitty® Low-Side MOSFET Driver

Online Datasheet

Features:

- +4.5V to +18V operation
- Low steady-state supply current
  - 50µA typical, control input low
  - 370µA typical, control input high
- 1.2A nominal peak output
  - 3.5Ω typical output resistance at 18V supply
  - 7.8Ω typical output resistance at 5V supply
- Operates in low-side switch circuits
- TTL-compatible input withstands -20V
- ESD protection
- 25mV maximum output offset from supply or ground
- Inverting and noninverting versions

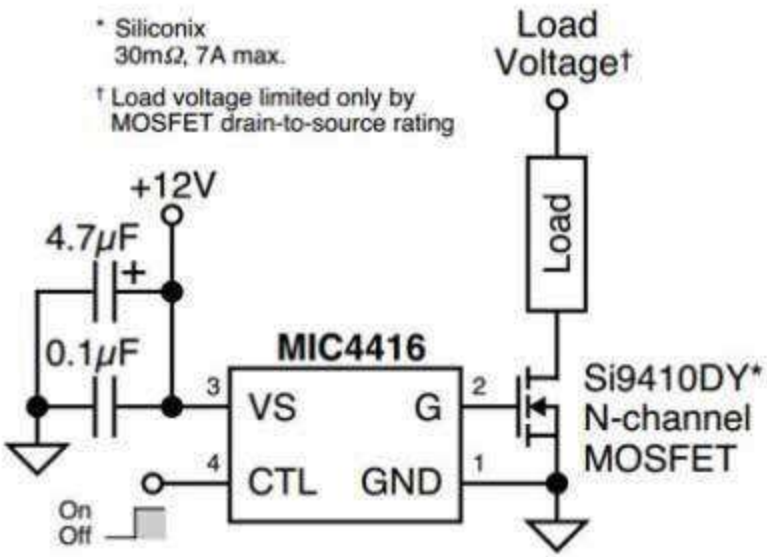

<< BACK

MIC4478/79/80

32V Low-Side Dual MOSFET Drivers

Online Datasheet

Features:

- +4.5V to +32V operation
- 300µA typical supply quiescent current
- 2.5A nominal peak output per channel
  - 6Ω high-side typical output resistance
  - 3Ω low-side typical output resistance
- Active-high driver enable inputs with internal –
  - pull-ups
- Operates with low-side switch circuits
- -40ºC to +125ºC ambient temperature range
- ESD protection
- Dual inverting, dual non-inverting, and –
  - inverting + non-inverting versions
- 8-pin SOIC (ePAD and non-ePAD)

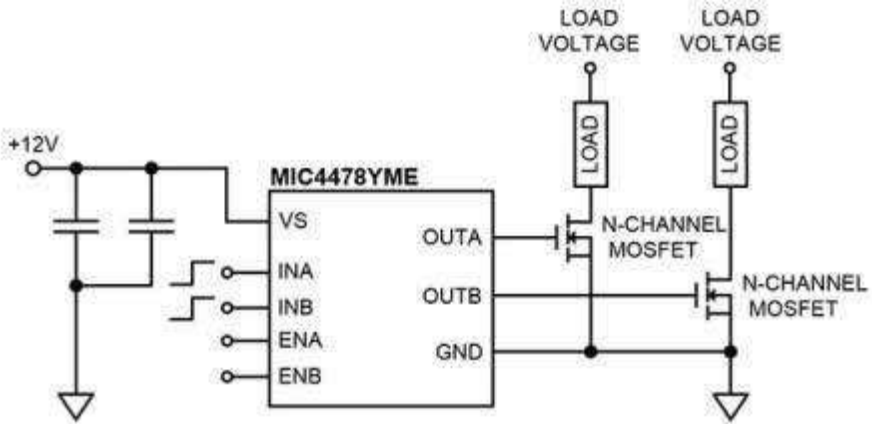

<< BACK

MIC4123/4/5

Dual 3A-Peak Low-Side MOSFET Driver
Bipolar/CMOS/DMOS Process

Online Datasheet

Features:

- Latch-up protected to >200mA reverse current
- Logic input withstands swing to -5V
- High 3A peak output current
- Wide 4.5V to 20V operating range
- Drives 1800pF capacitance in 25ns
- Short <50ns typical delay time
- TTL logic input independent of supply voltage
- Low equivalent 6pF input capacitance
- Low supply current
- 3.5mA with logic 1 input
- 350µA with logic 0 input
- Output voltage swings within 25mV of ground or VS.
- '426/7/8-, '1426/7/8-, '4426/7/8-compatible pinout
- Exposed backside pad packaging reduces heat ePad SOIC-8L –
  - (θJA = 58°C/W) 4mm x 4mm MLF®-8L (θJA = 45°C/W)

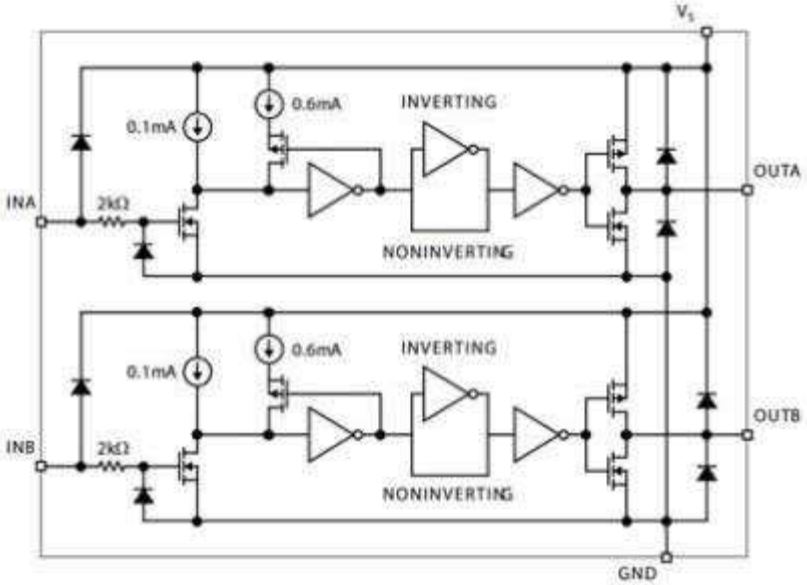

<< BACK

MAQ4123/4/5

Automotive AEC-Q100 Qualified Dual 3A Peak Low-Side MOSFET Driver

Online Datasheet

Features:

- Automotive AEC-Q100 qualified
- High ±3A peak output current
- Wide 4.5V to 20V supply voltage range
- Low 2.3Ω output resistance
- Logic input withstands swing to -5V
- Output voltage swings within 25mV of ground or VS
- Low supply current
  - 2.0mA with logic 1 input (maximum over – - temperature)
  - 300µA with logic 0 input (maximum over – - temperature)
- '426/7/8-, '1426/7/8-, '4426/7/8 industry standard pin out
- Fast 10ns rise/fall times with 1800pF capacitive load
- TTL/CMOS logic inputs independent of supply voltage
- Inverting, non-inverting, and differential configurations
- -40ºC to +125ºC temperature range

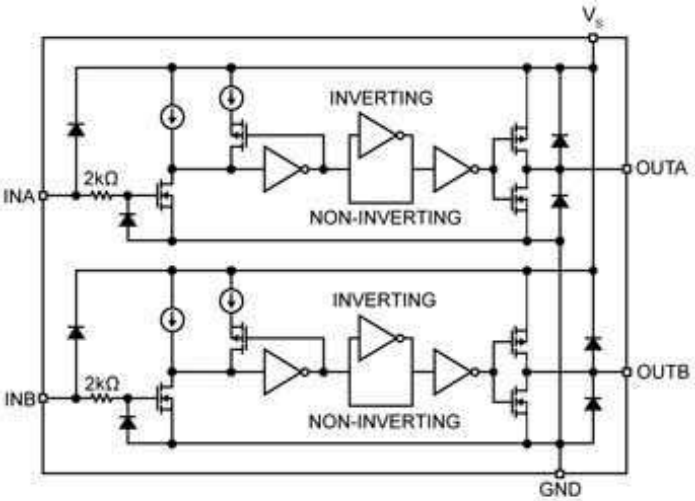

INTEGRATED COMPONENT COUNT:
- 4 RESISTORS
- 4 CAPACITORS
- 52 TRANSISTORS

<< BACK

MIC4126/7/8

Dual 1.5A-Peak Low-Side MOSFET Drivers in Advanced Packaging

Online Datasheet

Features:

- Dual 1.5A-peak drivers
- 4.5V to 20V operating range
- Exposed backside pad packaging reduces heat
  - ePad SOIC-8L (θJA = 58°C/W)
  - ePad MSOP-8L (θJA = 60°C/W)
  - 3mm x 3mm MLF®-10L (θJA = 60°C/W)
- Bipolar/CMOS/DMOS construction
- 25mV maximum output offset from supply or ground
- Latch-up protection to >500mA reverse current
- Switches 1000pF in 25ns
- Logic-input threshold independent of supply voltage
- Logic-input protection to -5V
- 6pF typical equivalent input capacitance
- -40ºC to +125ºC operating junction temperature range

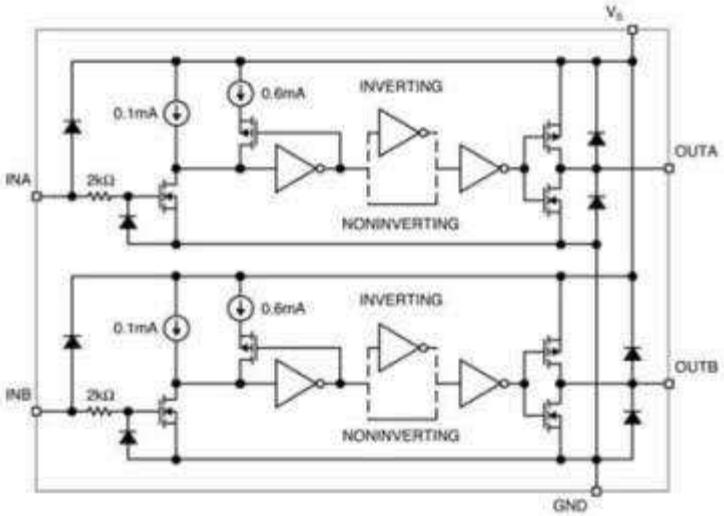

<< BACK

MIC4223/4/5

Dual 4A 4.5V to 18V 15ns Switch Time Low-Side MOSFET Drivers with Enable

Online Datasheet

Features:

- 4.5V to 18V supply voltage operating range
- High peak source/sink current
  - ±3A at VDD = 8V
  - ±4A at VDD = 12V
- 15ns/15ns rise and fall times with 2000pF load
- 25ns/35ns (rising/falling) input propagation delay
- 20ns/45ns (rising/falling) enable propagation delay
- Active-high driver enable inputs with 100kΩ pull-ups
- Output latch-up protection to >500mA reverse current
- Industry standard pin out with two package options
  - ePad MSOP-8 (θJA = 60°C/W)
  - 8-pin SOIC (θJA = 120°C/W)
- Available in dual-inverting (MIC4223), dual non-inverting (MIC4224) and -- complementary (MIC4225)
- -40ºC to +125ºC operating junction temperature range

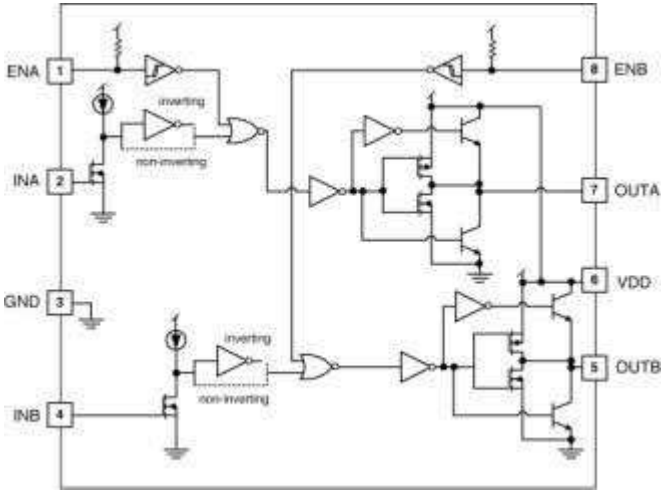

<< BACK

MIC4423/4/5

Dual 3A-Peak Low-Side MOSFET Driver
Bipolar/CMOS/DMOS Process

Online Datasheet

Features:

- Reliable, low-power bipolar/CMOS/DMOS –
  - construction
- Latch-up protected to >500mA reverse current
- Logic input withstands swing to -5V
- High 3A peak output current
- Wide 4.5V to 18V operating range
- Drives 1800pF capacitance in 25ns
- Short <40ns typical delay time
- Low equivalent 6pF input capacitance
- 3.5mA with logic 1 input
- 350µA with logic 0 input
- Low 3.5Ω typical output impedance
- Output voltage swings within 25mV of ground or VS.
- '426/7/8-, '1426/7/8-, '4426/7/8-compatible pinout
- Inverting, noninverting, and differential configurations

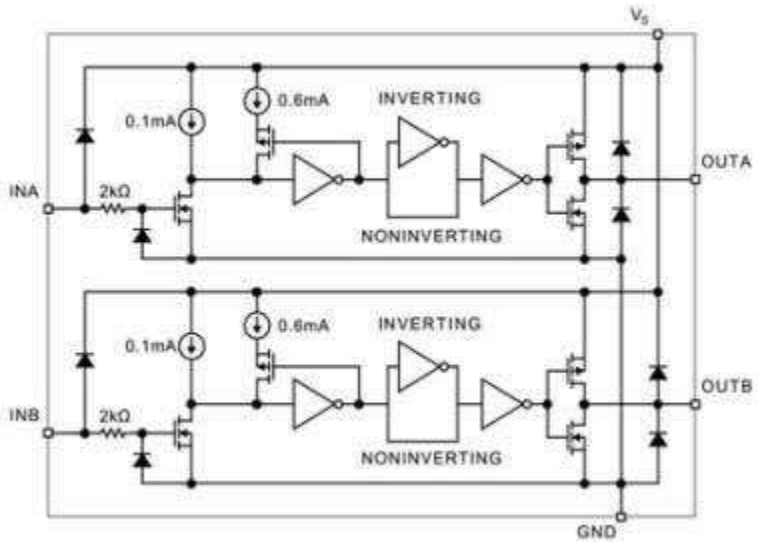

<< BACK

MIC4426/7/8

Dual 1.5A-Peak Low-Side MOSFET Driver

Online Datasheet

Features:

- Latch-up protection to >500mA reverse current
- 1.5A peak output current
- 4.5V to 18V operating range
- Low quiescent supply current
  - 4mA at logic 1 input
  - 400µA at logic 0 input
- Switches 1000pF in 25ns
- 7Ω output impedance
- <40ns typical delay
- 6pF typical equivalent input capacitance
- 25mV max. output offset from supply or ground
- Replaces MIC426/427/428 and MIC1426/1427/1428
- Dual inverting, dual noninverting, and inverting/noninverting configurations
- ESD protection

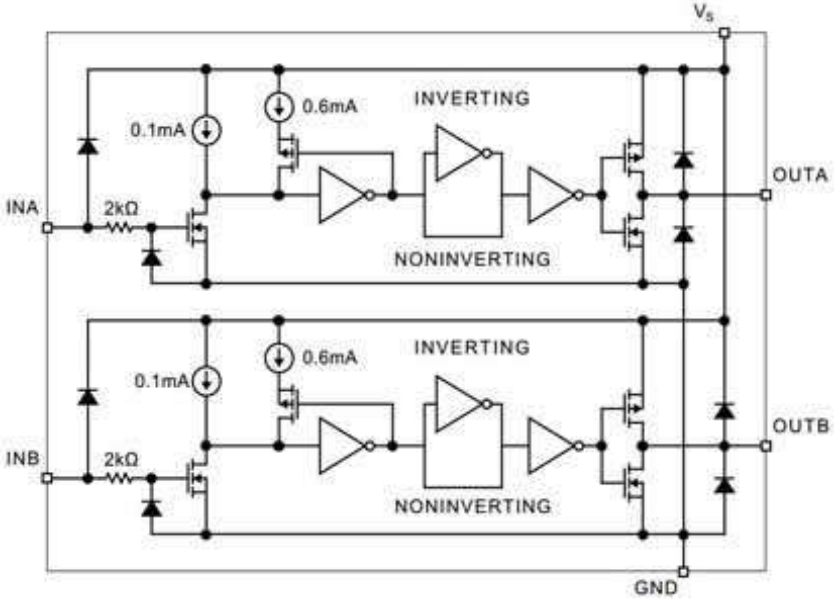

<< BACK

MIC4467/8/9

Quad 1.2A-Peak Low-Side MOSFET Driver

Online Datasheet

Features:

- Built using reliable, low power CMOS –
  - processes
- Latchproof: withstands 500mA inductive –
  - kickback
- Three input logic choices
- Symmetrical rise and fall times 25ns
- Short, equal delay times 75ns
- High peak output current 1.2A
- Wide operating range 4.5 to 18V
- Low equivalent input capacitance (typ) 6pF
- Inputs = Logic 1 for any input from 2.4V to VS
- ESD protected

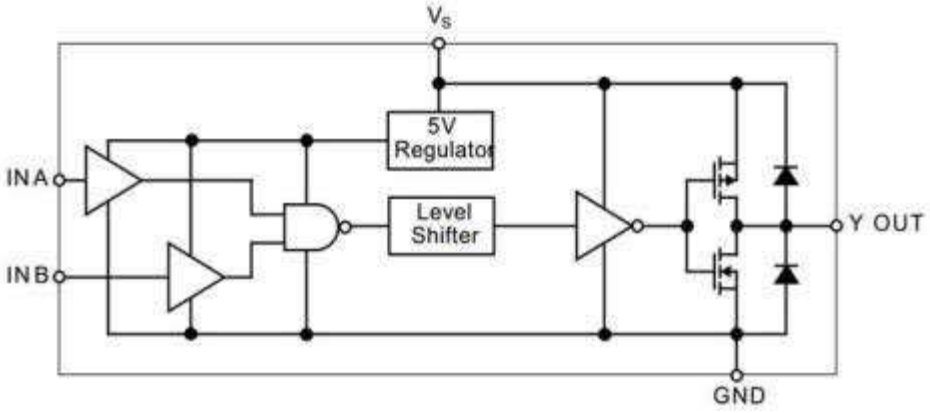

<< BACK

MIC58P01

8-Bit Parallel-Input Protected Latched Driver

Online Datasheet

Features:

- 4.4MHz Minimum Data Input Rate
- High-Voltage, High-Current Outputs
- Per-Output Overcurrent Shutdown (500mA – - typical)
- Under Voltage Lockout
- Thermal Shutdown
- Output Transient Protection Diodes
- CMOS, PMOS, NMOS, and TTL Compatible – - Inputs
- Internal Pull-Down Resistors
- Low-Power CMOS Latches

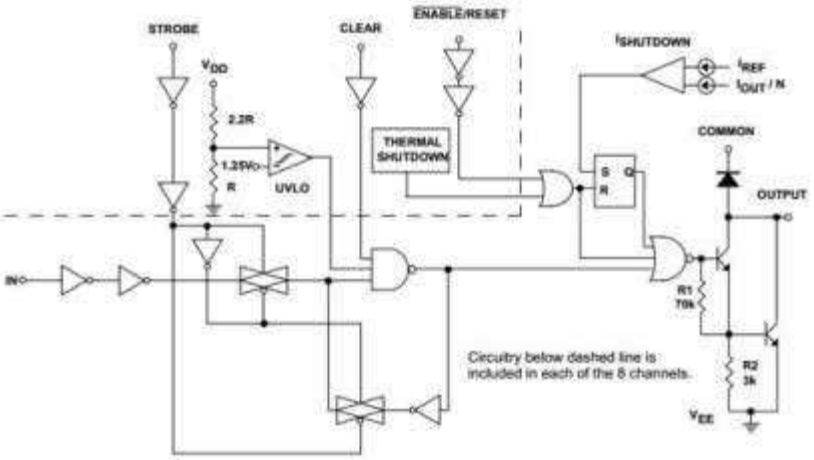

<< BACK

MIC59P50

8-Bit Parallel-Input Protected Latched Driver

Online Datasheet

Features:

- 4.4 MHz Minimum Data Input Rate
- High-Voltage, High-Current Outputs
- Undervoltage Lockout
- Thermal Shutdown
- Output Fault Flag
- Output Transient Protection Diodes
- CMOS-, PMOS-, NMOS-, and TTL-compatible – Inputs
- Internal Pull-Down Resistors
- Per-Output Over-Current Shutdown (500mA – - Typical)
- Low-Power CMOS Latches
- Single or Split Supply Operation

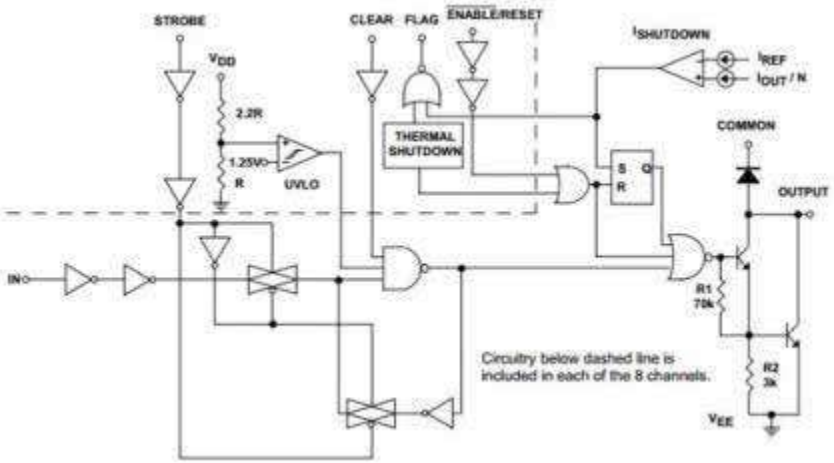

<< BACK

MIC5800/1

4/8-Bit Parallel-Input Latched Drivers

Online Datasheet

Features:

- CMOS, PMOS, NMOS, and TTL Compatible –
  - Inputs
- 4.4MHz Minimum Data Input Rate
- High-Voltage, Current Sink Outputs
- Output Transient Protection
- Internal Pull-Down Resistors
- Low-Power CMOS Latches

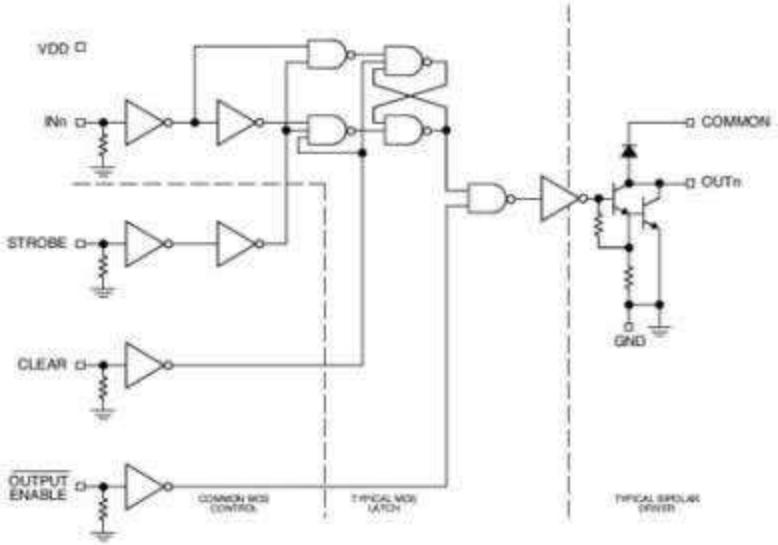

<< BACK

MIC5822

8-Bit Serial-Input Latched Drivers

Online Datasheet

Features:

- 3.3 MHz Minimum Data-Input Rate
- CMOS, PMOS, NMOS, TTL Compatible
- Internal Pull-Down or Pull-Up Resistors
- Low-Power CMOS Logic and Latches
- High-Voltage Current-Sink Outputs
- Single or Split Supply Operation

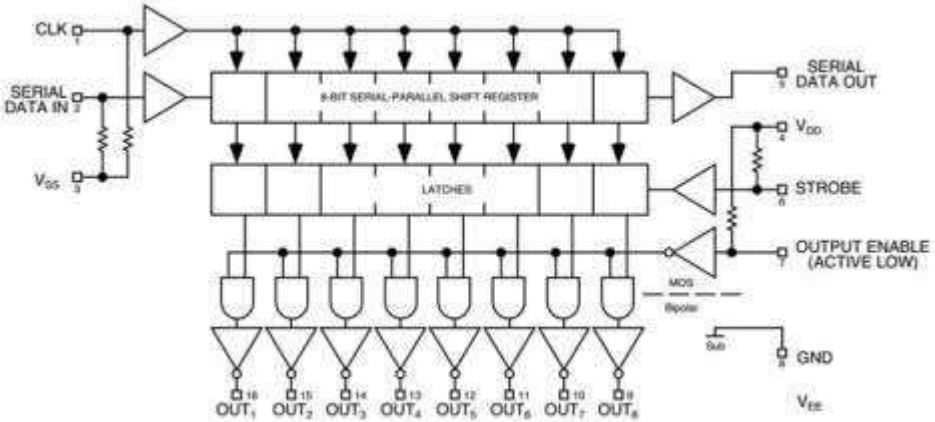

<< BACK

MIC5841/2

8-Bit Serial-Input Latched Drivers

Online Datasheet

Features:

- 3.3 MHz Minimum Data-Input Rate
- CMOS, PMOS, NMOS, TTL Compatible
- Internal Pull-Up/Pull-Down Resistors
- Low-Power CMOS Logic and Latches
- High-Voltage Current-Sink Outputs
- Output Transient-Protection Diodes
- Single or Split Supply Operation

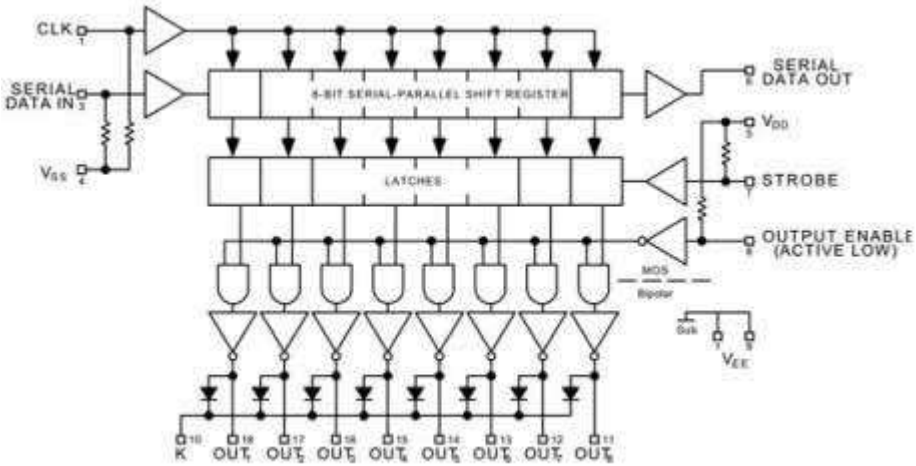

<< BACK

MIC58P42

8-Bit Serial-Input Protected Latched Driver

Online Datasheet

Features:

- 3.3 MHz Minimum Data-Input Rate
- CMOS, PMOS, NMOS, and TTL Compatible
- Internal Pull-Up/Pull-Down Resistors
- Low Power CMOS Logic and Latches
- High Voltage (80V) Current-Sink Outputs
- Output Transient-Protection Diodes
- Single or Split Supply Operation
- Thermal Shutdown
- Under-Voltage Lockout
- Per-Output Over-Current Shutdown (500mA typical)

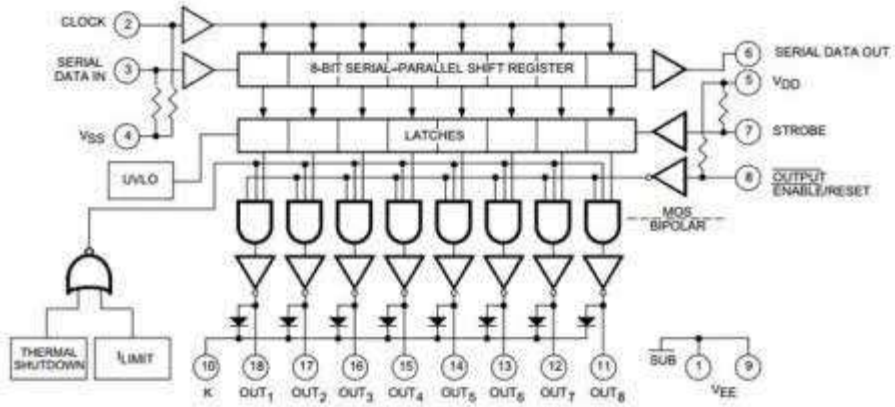

<< BACK

MIC59P60

8-Bit Serial-Input Protected Latched Driver

Online Datasheet

Features:

- 3.3 MHz Minimum Data-Input Rate
- Output Current Shutdown (500mA Typical)
- Under Voltage Lockout
- Thermal Shutdown
- Output Fault Flag
- CMOS, PMOS, NMOS, and TTL Compatible
- Internal Pull-Up/Pull-Down Resistors
- Low Power CMOS Logic and Latches
- High Voltage Current Sink Outputs
- Output Transient-Protection Diodes
- Single or Split Supply Operation

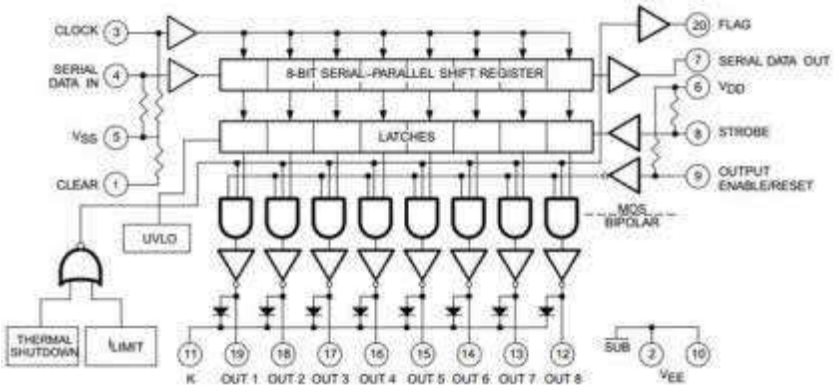

<< BACK

MIC5821

8-Bit Serial-Input Latched Drivers

Online Datasheet

Features:

- 3.3 MHz Minimum Data-Input Rate
- CMOS, PMOS, NMOS, TTL Compatible
- Internal Pull-Down or Pull-Up Resistors
- Low-Power CMOS Logic and Latches
- High-Voltage Current-Sink Outputs
- Single or Split Supply Operation

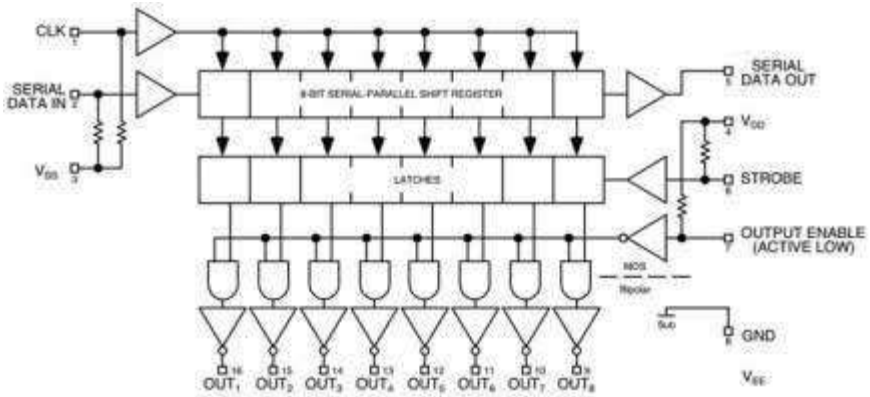

<< BACK

MIC5891

8-Bit Serial-Input Latched Source Driver

Online Datasheet

Features:

- High-voltage, high-current outputs
- Output transient protection diodes
- CMOS-, PMOS-, NMOS-, and TTL -- compatible inputs
- 5MHz typical data input rate
- Low-power CMOS latches

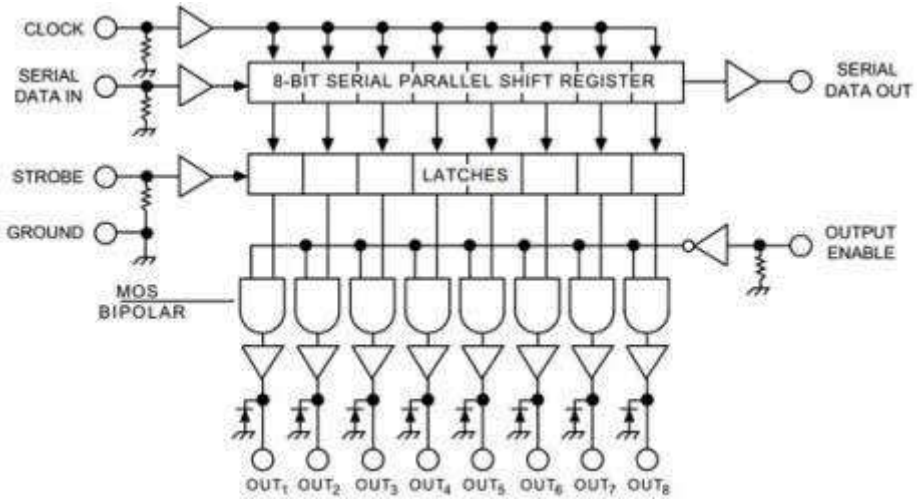

<< BACK

MIC2981/2

High-Voltage High-Current Source Driver Array

Online Datasheet

Features:

- Output voltage to 50V
- Output current to 500mA
- Transient-protected outputs
- Integral clamp diodes
- TTL-, CMOS-, or PMOS-compatible –
  - inputs

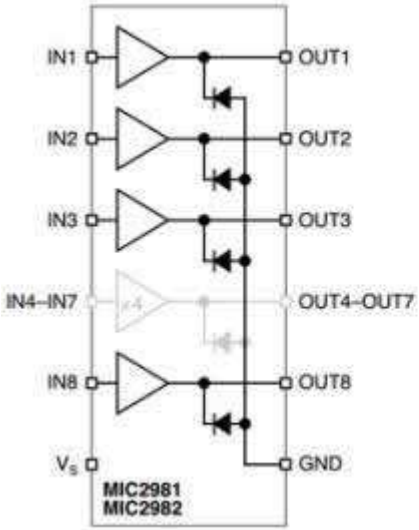

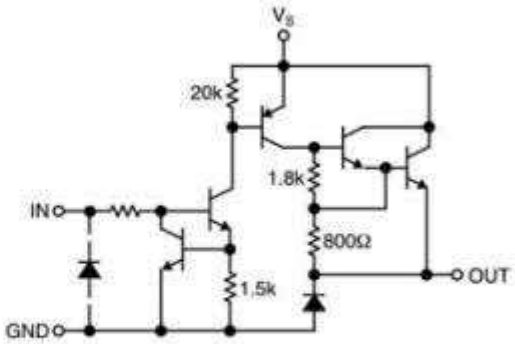

Typical MIC2891/2982 Source Driver

<< BACK

MIC2584

Dual-Channel Hot Swap Controller/Sequencer

Online Datasheet

Features:

- 1.0V to 13.2V supply voltage operation
- Surge voltage protection up to 20V
- Programmable inrush current limiting
- Electronic circuit breaker
- Undervoltage lockout protection
- Fast response to short circuit conditions (<1µs)
- Dual-level overcurrent fault sensing eliminates – - false tripping
- Current regulation limits inrush current regardless – of load capacitance

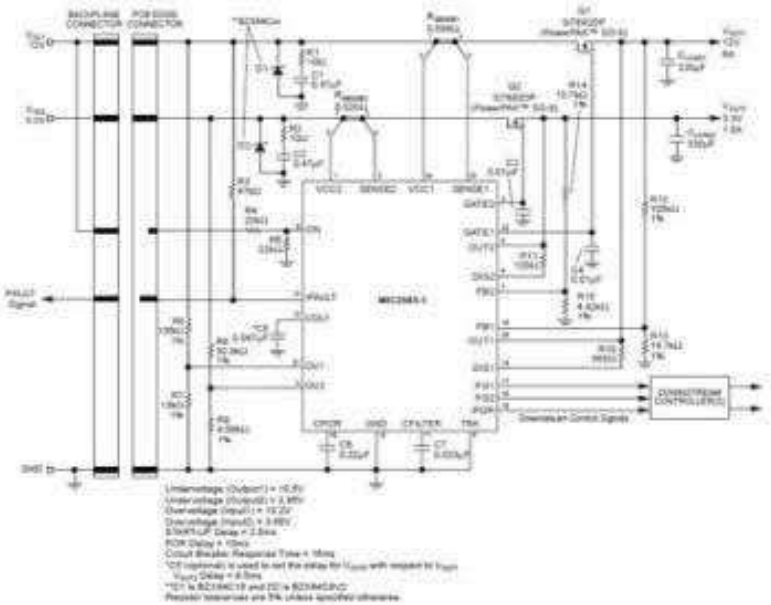

<< BACK

MIC2085/6

Single Channel Hot Swap Controllers

Online Datasheet

Features:

- MIC2085: Pin for pin functional equivalent to the –
  - LTC1642
- 2.3V to 16.5V supply voltage operation
- Surge voltage protection to 33V
- Operating temperature range -40ºC to +85ºC –
  - Programmable inrush current limiting
- Analog foldback current limiting
- Electronic circuit breaker
- Dual-level overcurrent fault sensing
- Fast response to short circuit conditions (<1µs)
- Programmable output undervoltage detection
- Undervoltage lockout protection
- Power-on reset (MIC2085/86) and power-good (MIC2086) status outputs
- Driver for SCR crowbar on overvoltage Single Channel Hot Swap Controllers

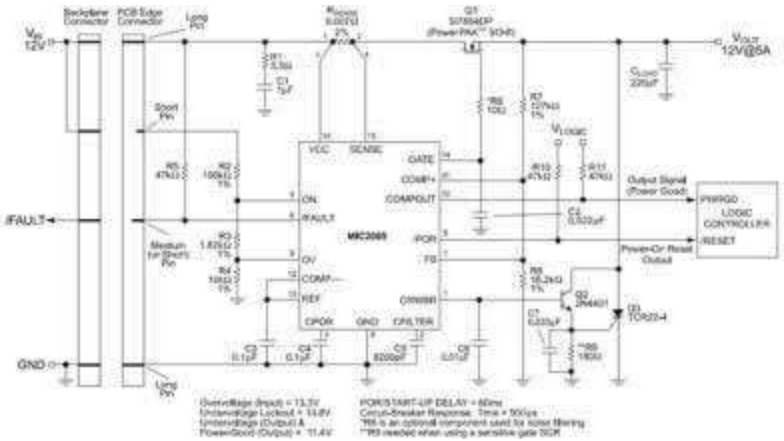

<< BACK

MIC2582/3/3R

Single Channel Hot Swap Controllers

Online Datasheet

Features:

- MIC2582: Pin-for-pin functional equivalent to the -– LTC1422
- 2.3V to 13.2V supply voltage operation
- Surge voltage protection up to 20V
- Programmable inrush current limiting
- Electronic circuit breaker
- Fast response to short-circuit conditions (<1µs)
- Programmable output undervoltage detection
- Undervoltage Lockout (UVLO) protection
- Auto-restart function (MIC2583R)
- Power-on-Reset status output
- Power good (PG) status output (MIC2583 and MIC2583R)
- /FAULT status output (MIC2583 and MIC2583R)
- Current regulation limits inrush current regardless of load capacitance

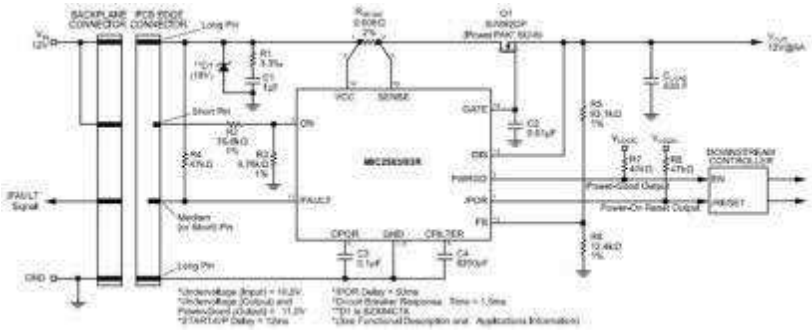

<< BACK

MIC2310

Single-FET Constant Power-Limit Hot Swap Controller

Online Datasheet

Features:

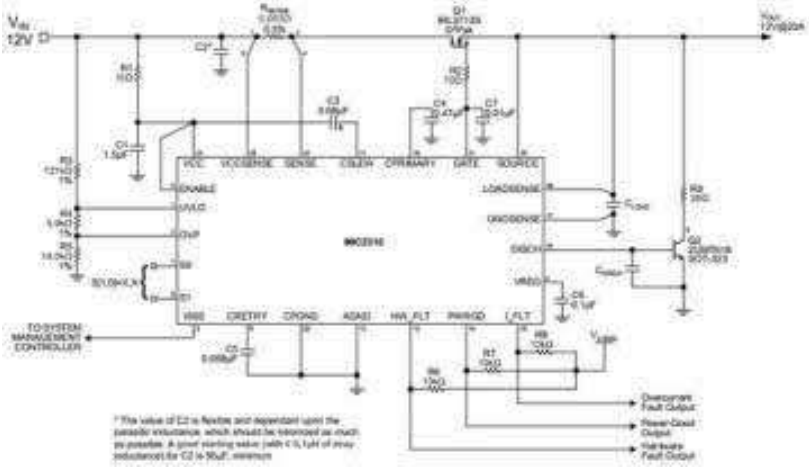

- Provides safe PCB insertion and removal from –
  - live +12V backplanes
- Patent-pending, adaptive circuit breaker –
  - threshold control
- Maintains constant power product at output
- Power-limit product (VA) is externally –
  - programmable for various power applications
- Dual-level, dual-speed overcurrent -
  - detection/protection
- Programmable primary detector response time
- Fast (<1µs) secondary detector response time to short circuit conditions
- User-programmable threshold settings via (2) digital inputs
- Programmable inrush current slew-rate control
- Electronic circuit breaker functions after fault
- Latch off
- Automatic retry
- Fault reporting:
- Open-drain 'Power-is-Good' output
- Open-drain 'I_FLT' output signaling for all current faults
- Shorted RSENSE and Damaged MOSFET detection (D-G and D-S shorts)

<< BACK

MIC2587

Single-Channel Positive High-Voltage Hot Swap Controller

Online Datasheet

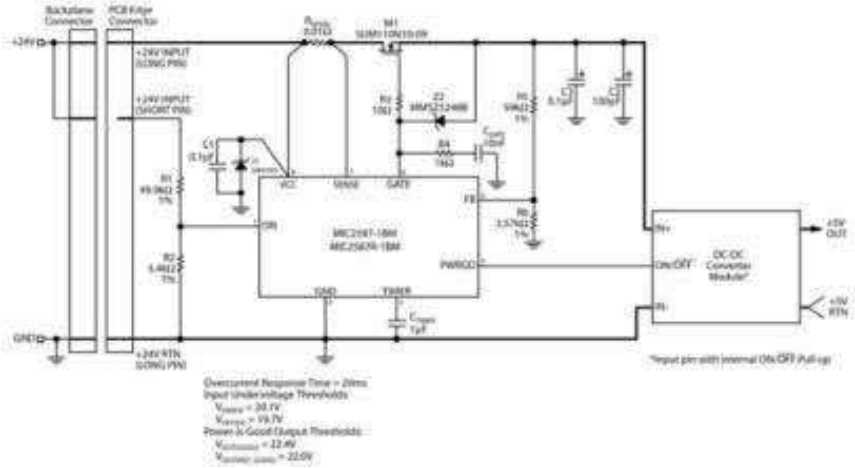

Features:

- MIC2587: Pin-for-pin functional equivalent to – - the LT1641
- Fast responding circuit breaker (< 2µs) to short – circuit loads
- Operates from +10V to +80V with 100V ABS – - MAX operation
- Fault Reporting: Open-drain "Power-is-Good" – - output for enabling DC/DC converter(s)
- Active-HIGH: MIC2587-1/MIC2587R-1
- Active-LOW: MIC2587-2/MIC2587R-2
- Industrial temperature specifications at – - VCC = +24V and VCC = +48V
- Active current regulation minimizes inrush current
- Electronic circuit breaker for overcurrent fault protection
- Output latch off (MIC2587) or
- Output auto-retry (MIC2587R)

<< BACK

MIC2588/94

Single-Channel Negative High-Voltage Hot Swap Power Controllers

Online Datasheet

Features:

- MIC2588: Pin-for-pin functional equivalent to the – LT1640/LT1640A/LT4250
- Provides safe insertion and removal from live – - 48V (nominal) backplanes
- Operates from -19V to -80V
- Electronic circuit breaker function
- Built-in 400µs "nuisance-trip" delay (tFLT)
- Regulated maximum output current into faults
- Programmable inrush current limiting
- Fast response to short circuit conditions (< 1µs)
- Programmable undervoltage and overvoltage – - lockouts (MIC2588-xBM)
- Programmable UVLO hysteresis (MIC2594-xBM)
- Fault reporting: Active-HIGH (-1BM) and Active – - LOW (-2BM) Power-Good output signal

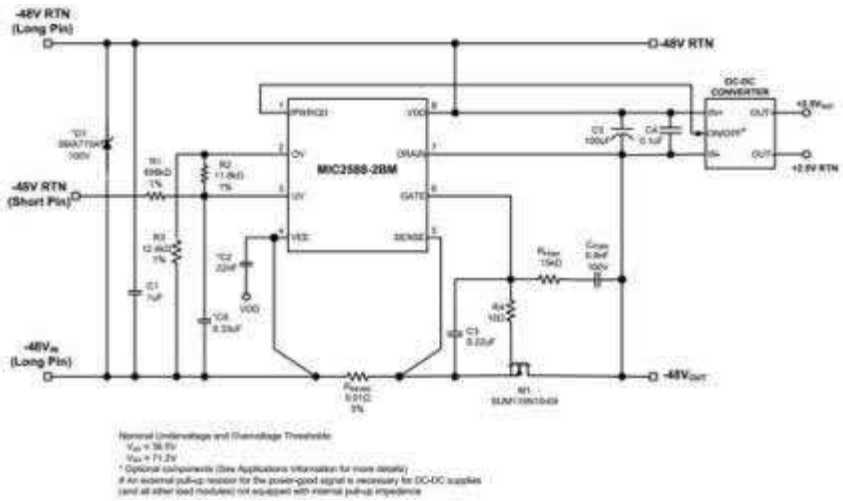

<< BACK

MIC2595

Single-Channel Negative High-Voltage Hot Swap Power Controller/Sequencer

Online Datasheet

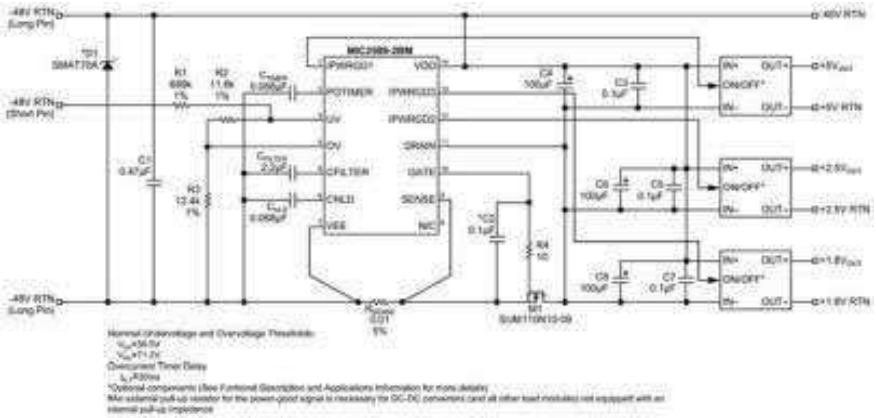

Features:

- Operates from -19V to -80V
- Electronic circuit breaker function:
  - Output latch OFF (MIC2595)
  - Output auto-retry (MIC2595R)
- Active current regulation to control inrush –
  - currents
- Programmable UVLO hysteresis
- Provides safe insertion and removal from live –
  - 48V (nominal) backplanes
- User-programmable overcurrent detector –
  - response time
- Fast responding circuit breaker (<1µs) to short –
  - circuit conditions
- Staggered 'Power-Good' output signals provide load sequencing:
  - Active-HIGH (-1)
  - Active-LOW (-2)

<< BACK

MIC2342

Dual-Slot PCI Express® Hot-Plug Controller

Online Datasheet

Features:

- Supports two independent PCI Express slots
- MAIN & AUX outputs are inter-dependent during AUX –
  - overcurrent conditions
- 12V, 3.3V, and 3.3VAUX supplies supported per PCI –
  - Express Specification v1.0a, v.2.0
- Integrated Power MOSFETS for 3.3VAUX rails
- Electronic circuit breakers for each supply per slot
- Programmable gate voltage slew-rate control
- Active current regulation controls inrush current
- User-programmable Primary Overcurrent Detector
- /PWRGD and Delayed /PWRGD (164 ms) Signal –
  - Outputs per slot
- Separate /FAULT output signals for MAIN and AUX –
  - rails for each slot
- Internally de-bounced Plug-in Card Retention Switch –
  - Inputs per slot.

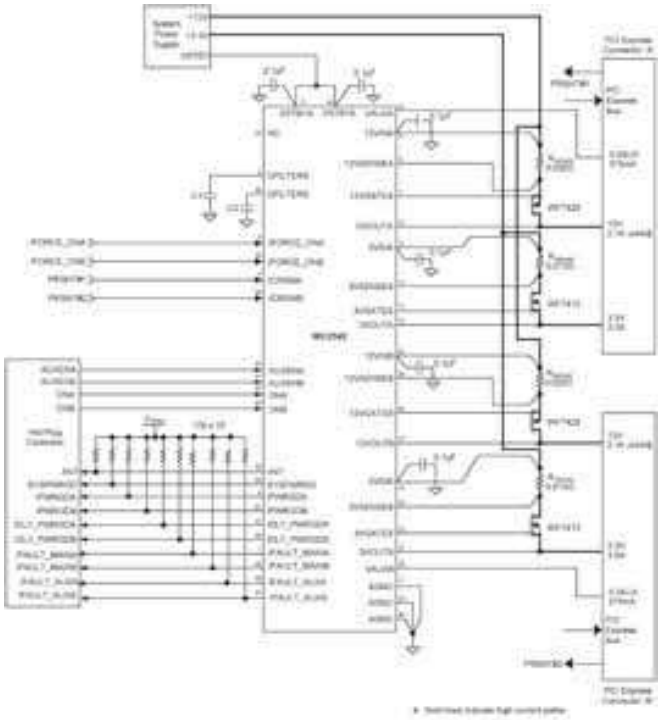

<< BACK

MIC2591B

Dual-Slot PCI Express Hot-Plug Controller

Online Datasheet

Features:

- Voltage-tolerant I/O for compatibility with SMBus 2.0 –
  - systems
- 12V, 3.3V, and 3.3VAUX supplies supported per PCI –
  - Express Specification v1.0a
    - Integrated power MOSFETs for 3.3VAUX rails
    - Standby operation for Wake-on-LAN applications with low backfeed on Main +12V and +3.3V rails.
- On-chip circuitry for data collection of each rail output –
  - voltage and output current for both slots
    - Integral analog multiplexer and 8-bit ΔΣADC
    - Compliant to the Intelligent Platform Management Interface (IPMI) Specification v1.0
    - Conversion results available via an SMBus interface
- Programmable inrush current limiting
- Active current regulation controls inrush current
- Electronic circuit breaker for each supply to each slot
- Thermal isolation between circuitry for Slot A and Slot B

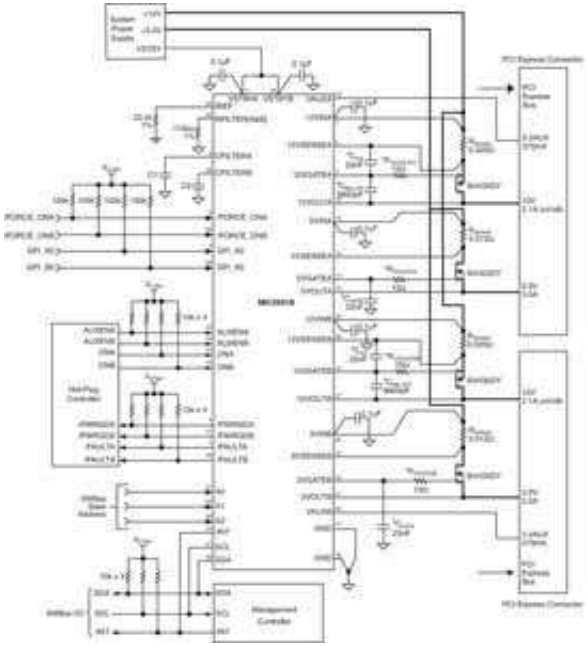

<< BACK

MIC705/6

µP Supervisory Circuit

Online Datasheet

Features:

- De-bounced manual reset input is TTL/CMOS – Compatible
- Reset pulse width: 200ms
- Watchdog timer, 1.6s (MIC705/706)
- 4.65V or 4.40V Precision Voltage Monitor
- Early power fail warning or low battery detect

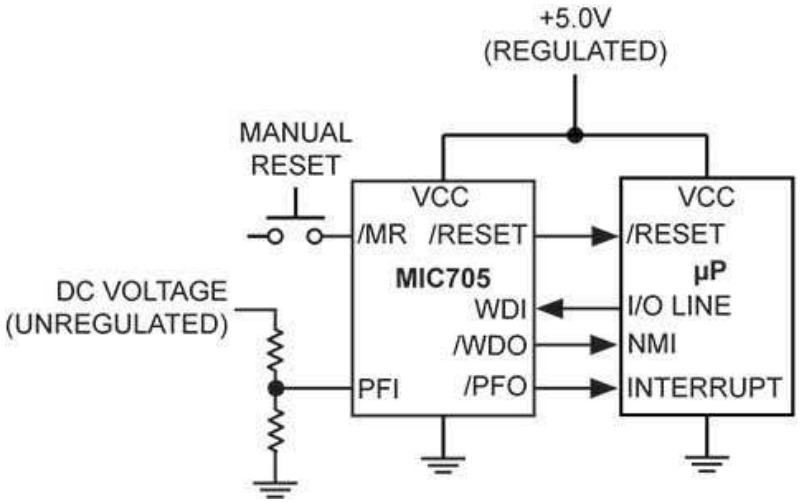

<< BACK

MIC809

Microprocessor Reset Circuits

Online Datasheet

Features:

- Precision voltage monitor for 3V, 3.3V or 5V power supplies
- /RESET remains valid with VCC as low as 1.4V for SOT-23 – - packaged part
- /RESET remains valid with VCC as low as 1V for SC70 – - packaged part
- Typically less than15µA supply current for SOT-23 packaged – part
- 5µ typical supply current for SC70 packaged part
- 140ms minimum reset pulse widths available
- Available in 3-pin SOT-23 and SC-70 package

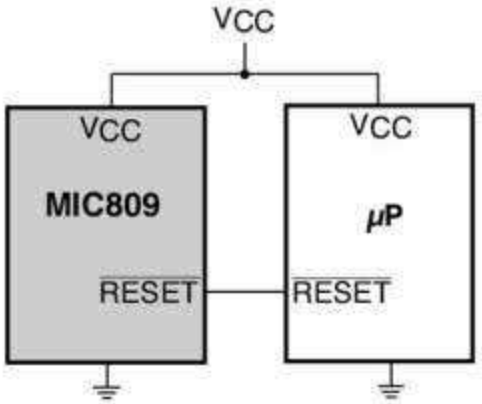

<< BACK

MIC811

Microprocessor Reset Circuits

Online Datasheet

Features:

- Precision voltage monitor for 3V, 3.3V or 5V –
  - power supplies
- /RESET remains valid with VCC as low as 1V
- 5µA typical supply current
- 140ms minimum reset pulse width available
- Manual reset input
- Available in 4-pin SOT-143 package

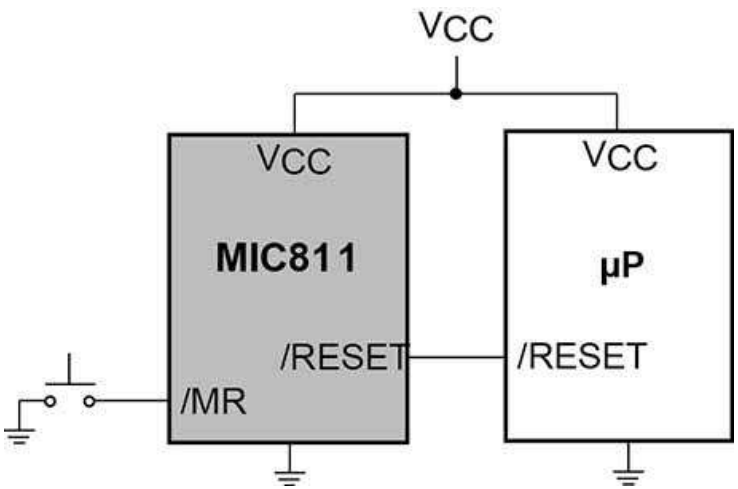

<< BACK

MIC1810

Microprocessor Reset Circuit

Online Datasheet

Features:

- Precision voltage monitor for 5%, 10%, or 15% drop – in 5V power supplies
- /RESET remains valid with VCC as low as 1V
- 5µA supply current (typical)
- 100ms minimum reset pulse width
- No external components required
- Available in 3-pin SOT-23 package

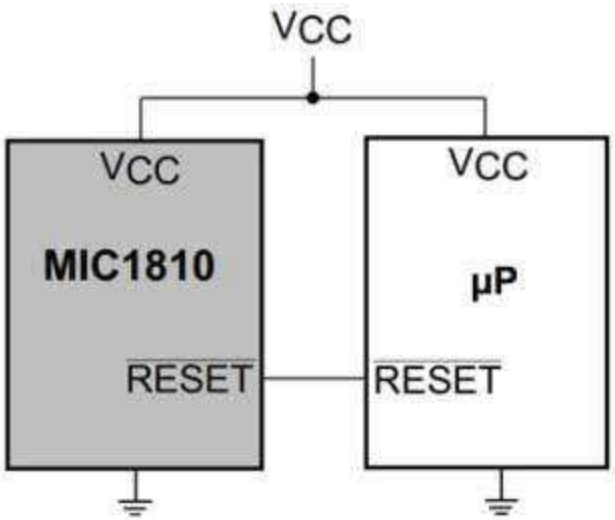

<< BACK

MIC1815

Microprocessor Reset Circuit

Online Datasheet

Features:

- Precision voltage monitor for 10% or 20% drop in –
  - 3.3V power supplies
- /RESET remains valid with VCC as low as 1V
- 5µA supply current
- 100ms minimum reset pulse width
- No external components required
- Available in 3-pin SOT-23 package

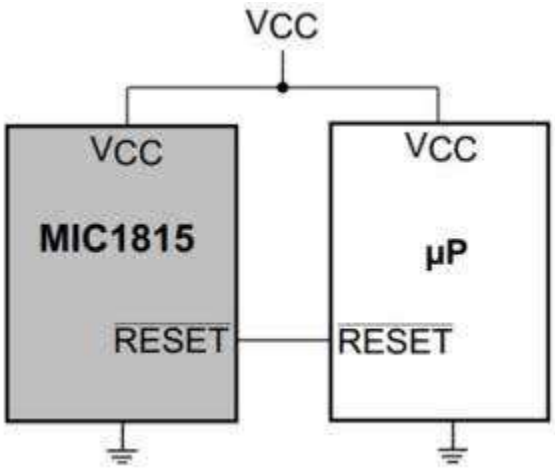

<< BACK

MIC2776L

Micro-Power Low Voltage Supervisor

Online Datasheet

Features:

- ±1.5% threshold accuracy
- Separate VDD input
- Generates power-on reset pulse (140ms min.)
- Manual reset input
- Inputs can be pulled above VDD (7V abs. max.)
- Ultra-low supply current, 3.0µA typical
- Rejects brief input transients
- User-adjustable input can monitor supplies as low –
  - as 0.3V
- Choice of active-high, active-low or open-drain –
  - activelow reset output
- IttyBitty® SOT-23-5 package
- Open-drain output can be pulled above VDD (7V –
  - abs. max.)

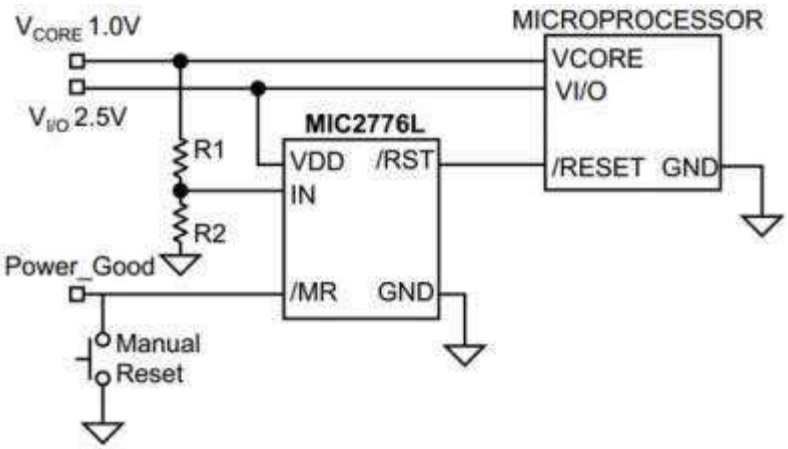

<< BACK

MIC2779L

Voltage Monitor with Adjustable Hysteresis

Online Datasheet

Features:

- Optimized for PDAs, cellular telephones, pagers, -- and other battery-powered devices
- Independently adjustable high- and low-voltage –- thresholds
- Internal logic prevents battery-voltage-fluctuation –- chatter
- For applications requiring open-drain output, see –- MIC2778
- High ±2% voltage threshold accuracy; 1% -- available
- Built in 140ms (minimum) delay deglitches output
- Extremely low 1µA typical supply current
- Immune to brief power supply transients
- 5-lead SOT-23 package

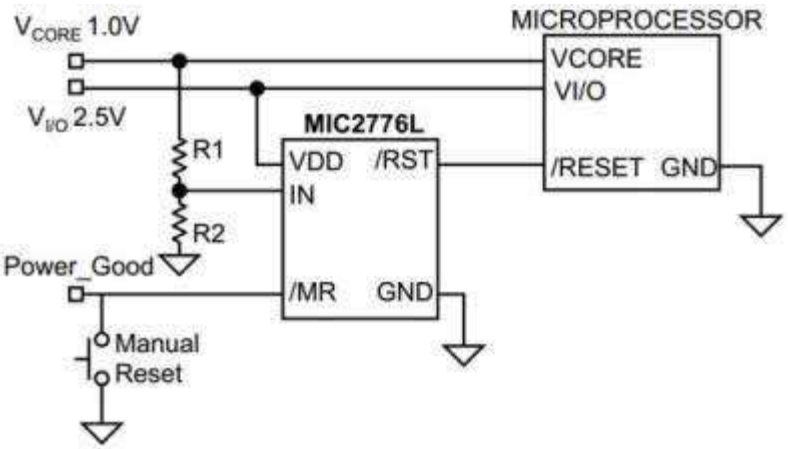

<< BACK

MIC2785

Dual Supply Voltage Monitor with Manual Reset

Online Datasheet

Features:

- No external components
- Monitors input voltage for under-voltage –
  - condition
- ±1.5% VIN threshold voltage accuracy
- Valid /RST state with VIN down to 0.0V
- Valid /RST state with VDD down to 1.20V
- Factory-programmed 1.62V reference
- Manual reset input (/MR)
- Active low RESET (/RST) output
- Ultra-low input current - 5µA total (VIN and VDD)
- Rejects brief input transients
- -40ºC to +85ºC operating temperature range
- RoHS lead-free compliant
- Available in tiny 6-pin 1.2mm x 1.2mm Thin MLF® package

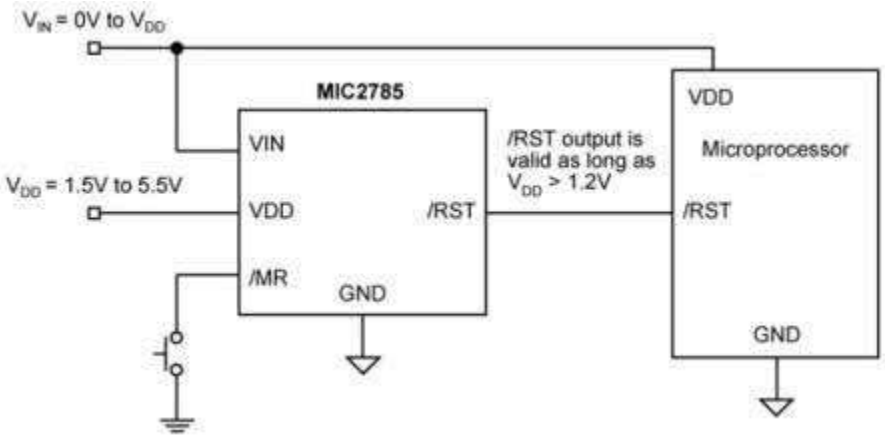

<< BACK

MIC8114

Microprocessor Reset Circuit

Online Datasheet

Features:

- Precision voltage monitor for 3.3V power supplies
- Specifically tailored to the AMD Elan SC400/410
- /RESET remains valid with VCC as low as 1V
- 5µA typical supply current
- 790ms minimum reset pulse width
- Manual reset input
- Available in 4-Pin SOT-143 Package

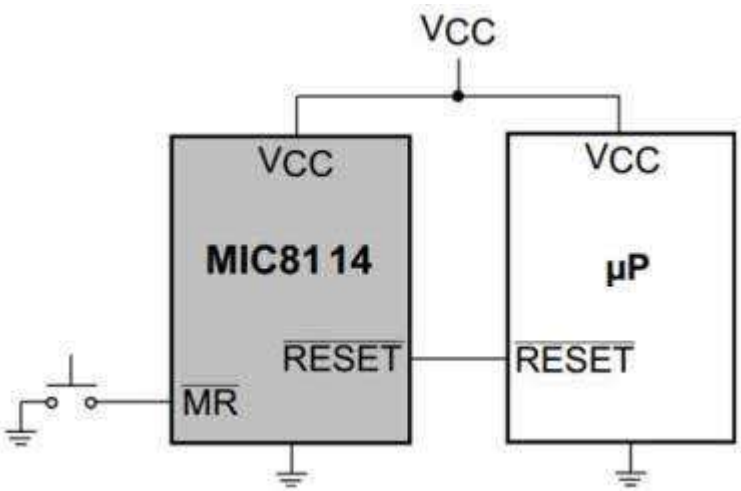

<< BACK

MIC8115

Microprocessor Reset Circuit

Online Datasheet

Features:

- Precision voltage monitor for 3.3V power supplies
- Specifically tailored to the AMD Elan SC500 Series
- /RESET remains valid with VCC as low as 1V
- 5µA typical supply current
- 1100ms minimum reset pulse width
- Manual reset input
- Available in 4-Pin SOT-143 Package

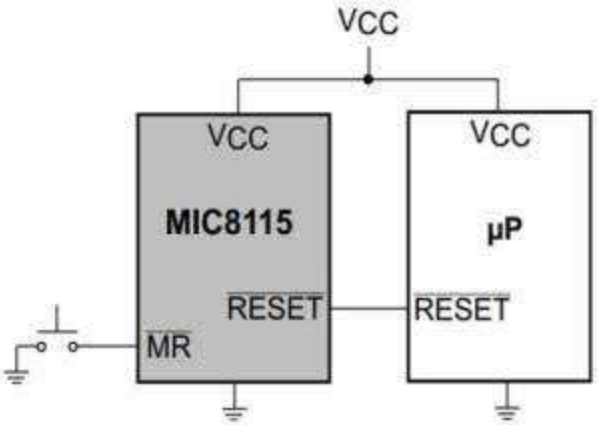

<< BACK

MIC810

Microprocessor Reset Circuits

Online Datasheet

Features:

- Precision voltage monitor for 3V, 3.3V or 5V power –
  - supplies
- /RESET remains valid with VCC as low as 1.4V for –
  - SOT-23 packaged part
- /RESET remains valid with VCC as low as 1V for –
  - SC70 packaged part
- Typically less than15µA supply current for SOT-23 –
  - packaged part
- 5µ typical supply current for SC70 packaged part
- 140ms minimum reset pulse widths available
- Available in 3-pin SOT-23 and SC-70 package

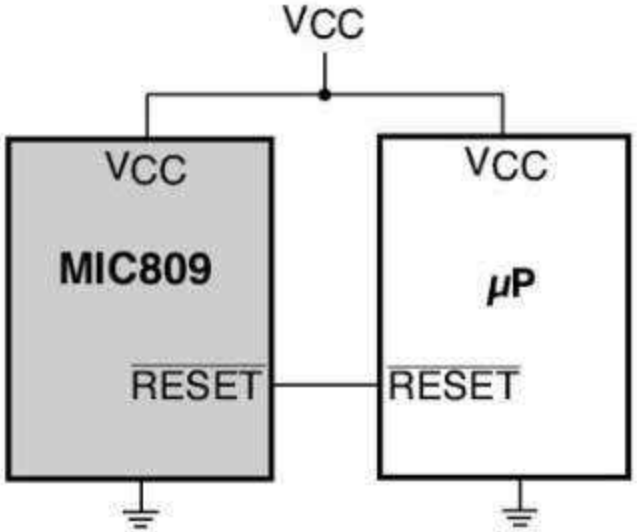

<< BACK

MIC812

Microprocessor Reset Circuits

Online Datasheet

Features:

- Precision voltage monitor for 3V, 3.3V or 5V –
  - power supplies
- /RESET remains valid with VCC as low as 1V
- 5µA typical supply current
- 140ms minimum reset pulse width available
- Manual reset input
- Available in 4-pin SOT-143 package

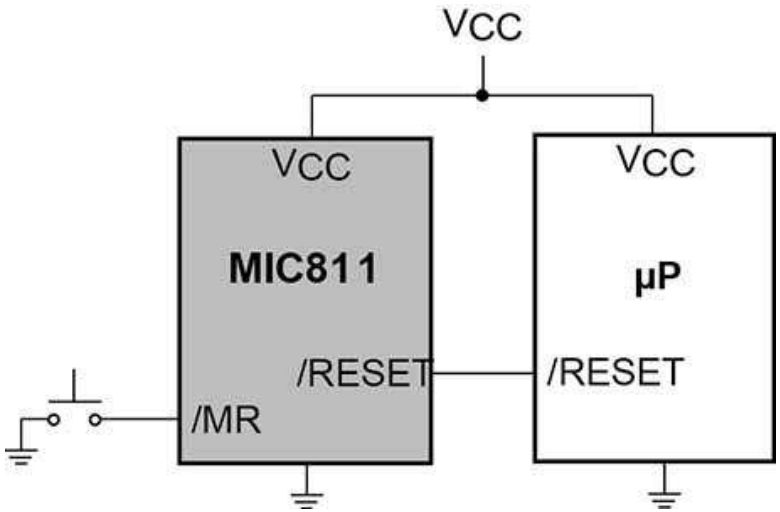

<< BACK

MIC2776H

Micro-Power Low Voltage Supervisor

Online Datasheet

Features:

- ±1.5% threshold accuracy
- Separate VDD input
- Generates power-on reset pulse (140ms min.)
- Manual reset input
- Inputs can be pulled above VDD (7V abs. max.)
- Open-drain output can be pulled above VDD (7V – - abs. max.)
- Ultra-low supply current, 3.0µA typical
- Rejects brief input transients
- Choice of active-high, active-low or open-drain – - active low reset output
- IttyBitty® SOT-23-5 package
- User-adjustable input can monitor supplies as low as 0.3V

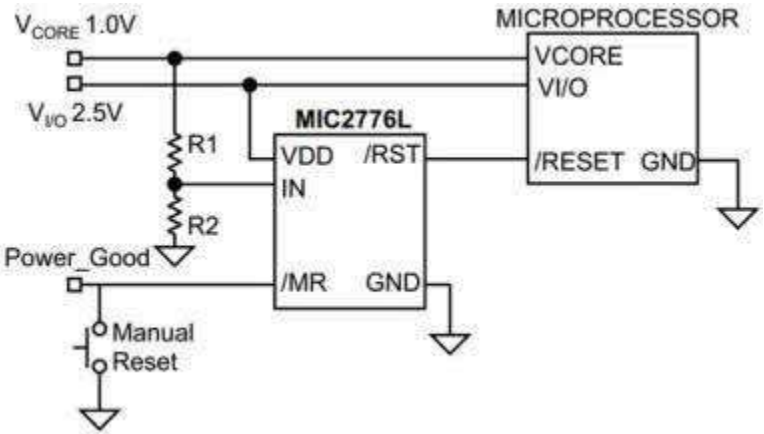

<< BACK

MIC2779H

Voltage Monitor with Adjustable Hysteresis

Online Datasheet

Features:

- Optimized for PDAs, cellular telephones, pagers, - and other battery-powered devices
- Independently adjustable high- and low-voltage – - thresholds
- For applications requiring open-drain output, see – MIC2778
- Internal logic prevents battery-voltage-fluctuation – chatter
- High ±2% voltage threshold accuracy; 1% - - available
- Built in 140ms (minimum) delay deglitches output
- Extremely low 1µA typical supply current
- Immune to brief power supply transients
- 5-lead SOT-23 package

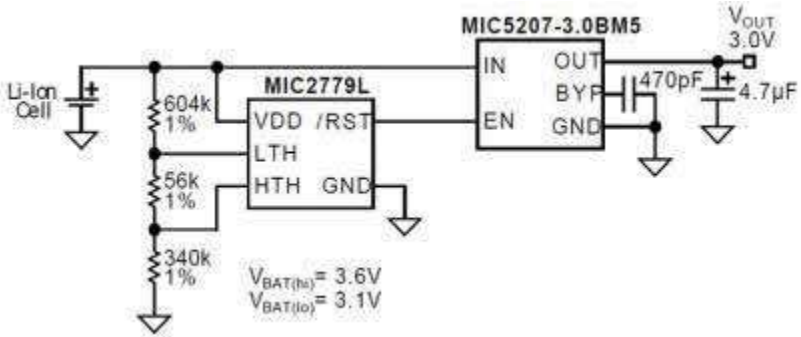

<< BACK

MIC707/8

µP Supervisory Circuit

Online Datasheet

Features:

- De-bounced manual reset input is TTL/CMOS –
  - Compatible
- Reset pulse width: 200ms
- Watchdog timer, 1.6s (MIC705/706)
- 4.65V or 4.40V Precision Voltage Monitor
- Early power fail warning or low battery detect

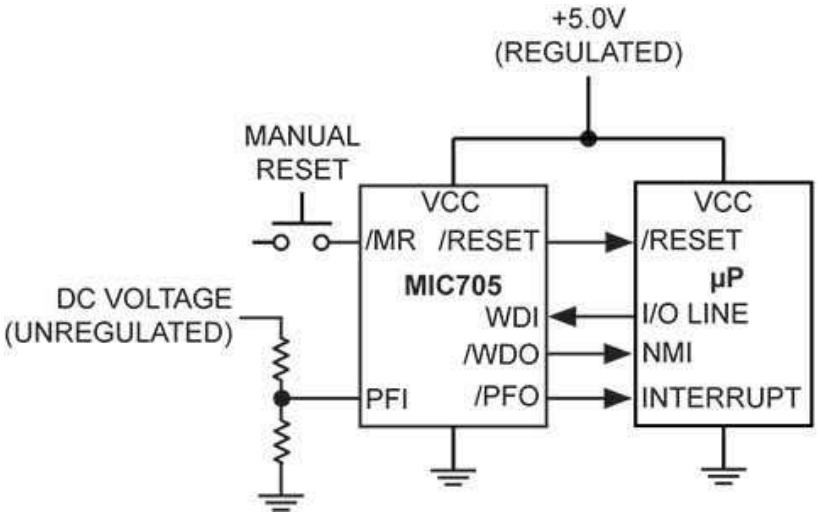

<< BACK

MIC1232

µP Supervisory Circuit

Online Datasheet

Features:

- Power OK/Reset time delay, 250ms min.
- Watchdog timer, 150ms, 600ms, or 1.2s typical
- Precision supply voltage monitor, select between -
  – 5% or 10% of supply voltage
- Available in 8-pin surface mount (SO)
- De-bounced External reset input
- Low supply current, <18µA typical

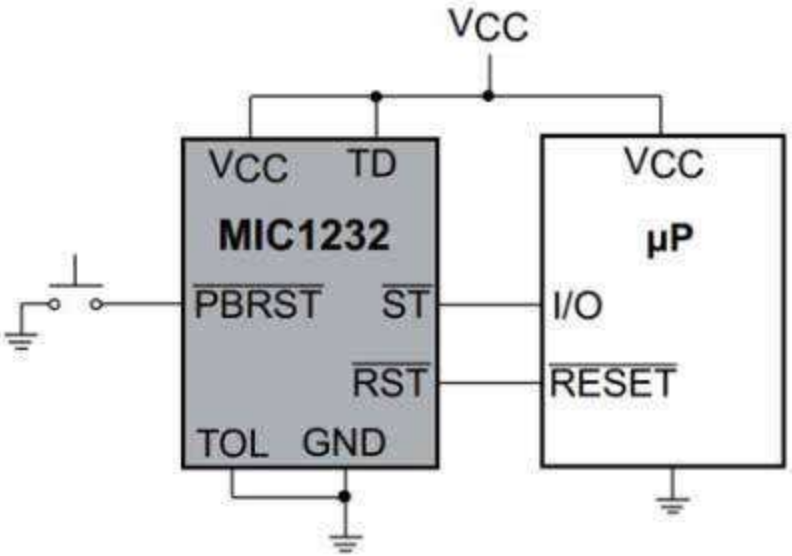

<< BACK

MIC1832

µP Supervisory Circuit

Online Datasheet

Features:

- Power OK/Reset time delay, 250ms min.
- Watchdog timer, 150ms, 600ms, or 1.2s typical
- Precision supply voltage monitor, select –
  - between 5% or 10% of supply voltage
- Available in 8-pin surface mount (SO)
- De-bounced External reset input
- Low supply current, <18µA typical

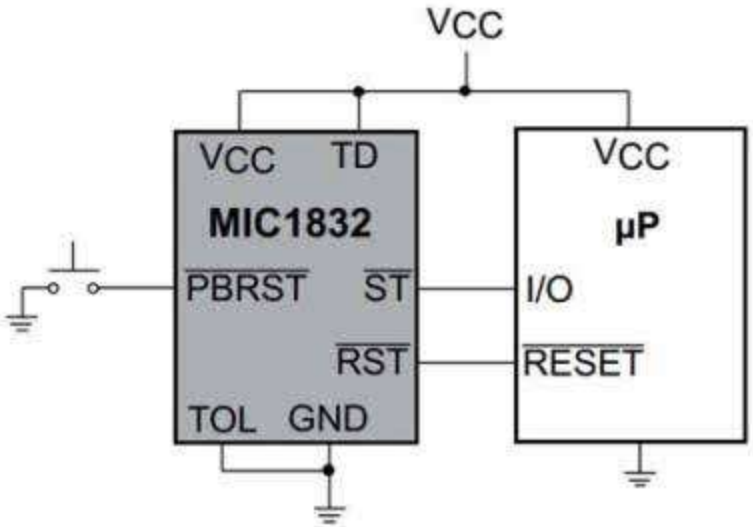

<< BACK

MIC2775

Micro-Power Voltage Supervisor

Online Datasheet

Features:

- Monitors power supply for under-voltage –
  - conditions
- Choice of factory-programmed thresholds
- Generates 140ms (minimum) power-on –
  - RESET pulse
- Manual reset capability
- Both active-high and active-low RESET –
  - outputs
- /RST output valid down to 1.2V
- Ultra-low supply current, 3.5µA typical
- Rejects brief input transients
- No external components
- Pin compatible upgrade for MAX825
- IttyBitty® 5-pin SOT-23 package

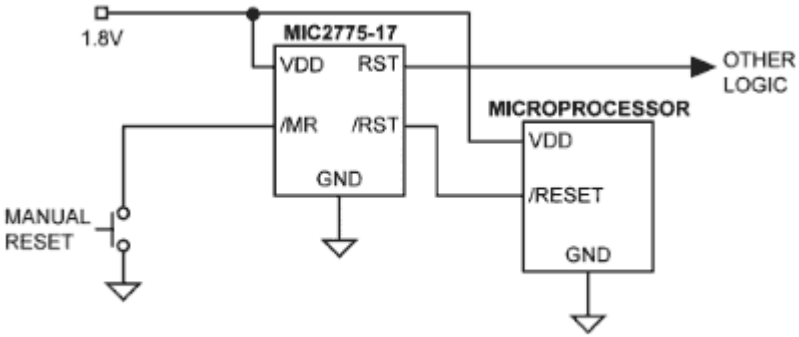

<< BACK

MIC826

Voltage Supervisor with Watchdog Timer Manual Reset & Dual Outputs

Online Datasheet

Features:

- Precision 1.8V to 5V power supply monitor
- ±0.5% threshold accuracy at TA = +25°C
- ±1.5% threshold accuracy from TA = -40ºC to – +125ºC
- 3.8µA supply current (MIC826S/R/T/W/Y/Z)
- 4.8µA supply current (MIC826L/M)
- 140ms (min.) reset timeout period
- 1.6s (typ.) watchdog timeout period
- Active-high and active-low push-pull outputs
- Guaranteed reset output valid to VCC = 1V
- -40ºC to +125ºC junction temperature range
- 6-pin 1.6x1.6x0.5mm Thin DFN package
- 50% smaller version of MAX823/MAX824/MAX825/ - - ADM823/ADM824/ADM825
- 8x lower watchdog input current than competition

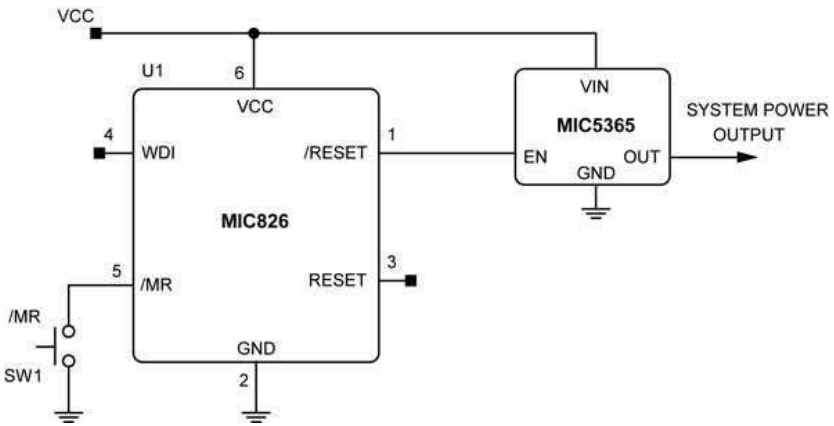

<< BACK

MIC803

3-Pin Microprocessor Supervisor Circuit with Open-Drain Reset Output

Online Datasheet

Features:

- 4.5µA supply current (typical) at 3.6V
- Open-Drain /RESET output
- /RESET remains valid with VCC as low as 1V
- 20ms, 140ms, or 1120ms (min) reset timeout –
  - Options
- 2.63V to 4.63V Preset Voltage Threshold –
  - Options
- 2.5% Voltage Threshold Accuracy over –
  - temperature
- 3-pin SC70-3 and 3-pin SOT-23 package
- -40ºC to +125ºC Junction Temperature Range

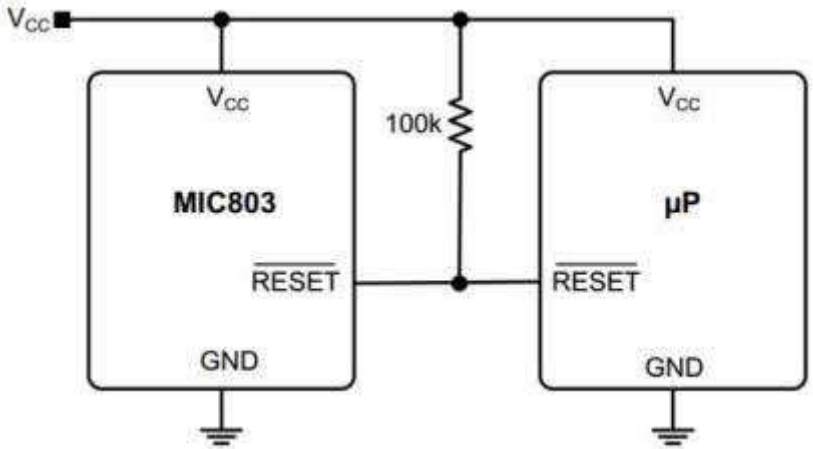

<< BACK

MIC2755

Battery System Supervisor

Online Datasheet

Features:

- Optimized for PDAs, pagers and other – - hand-held devices.
- Detects multiple battery states: Battery – - OK, Low battery, Dead battery.
- Adjustable voltage thresholds
- High accuracy ±2% voltage thresholds
- Reset generation at power-on (700ms – - min.)
- De-bounced manual reset function
- Internal logic prevents chatter if battery voltage fluctuates
- Extremely low 2µA typical supply current
- 8-pin MSOP package

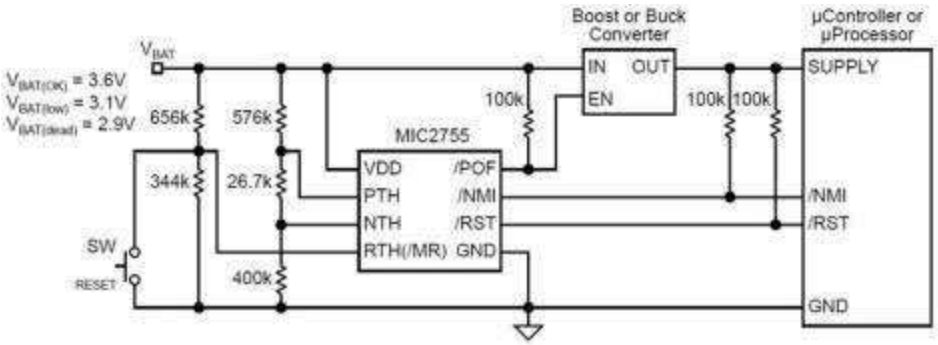

<< BACK

MIC2776N

Micro-Power Low Voltage Supervisor

Online Datasheet

Features:

- User-adjustable input can monitor supplies as – - low as 0.3V
- ±1.5% threshold accuracy
- Separate VDD input
- Generates power-on reset pulse (140ms min.)
- Choice of active-high, active-low or open-drain – - activelow reset output
- Inputs can be pulled above VDD (7V abs. max.)
- Open-drain output can be pulled above VDD – - (7V abs. max.)
- Ultra-low supply current, 3.0µA typical
- Rejects brief input transients
- SOT-23-5 package

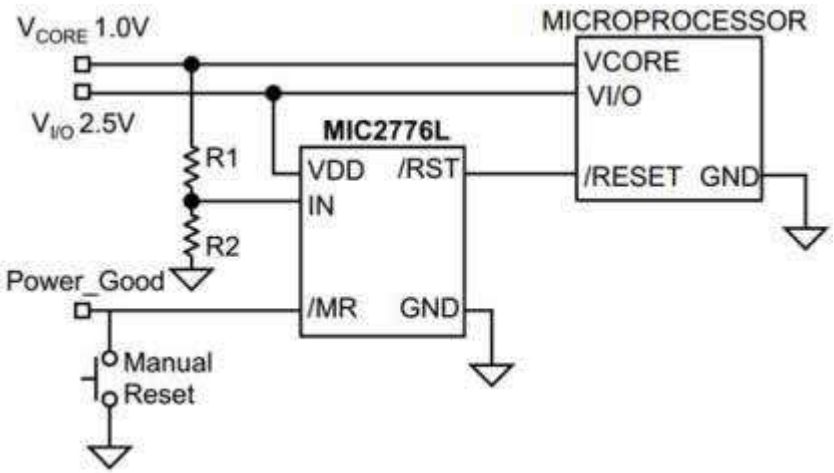

<< BACK

MIC2778

Voltage Monitor with Adjustable Hysteresis

Online Datasheet

Features:

- Optimized for PDAs, cellular telephones, -
  - pagers, and other battery-powered devices
- Independently adjustable high- and low –
  - voltage thresholds
- Internal logic prevents battery-voltage –
  - fluctuation chatter
- High ±2% voltage threshold accuracy; 1% -
  - available
- Built in 140ms (minimum) delay deglitches output
- For applications not requiring built-in delay, see MIC841
- Immune to brief power supply transients
- 5-lead SOT-23 package

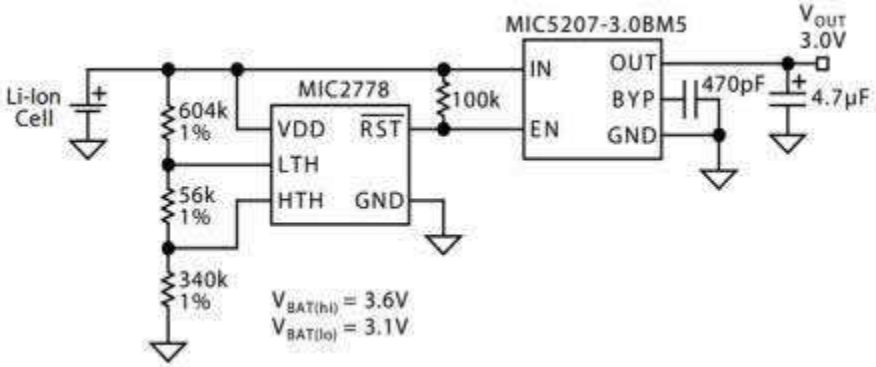

<< BACK

MIC6315

Open-Drain µP Reset Circuit

Online Datasheet

Features:

- Precision voltage monitor for 3V, 3.3V or 5V –
  - power supplies
- /RESET remains valid with VCC as low as 1V
- 5µA supply current
- 20ms, 140ms, or 1100ms minimum reset –
  - pulse widths available
- Manual reset input
- 4-pin SOT-143 package

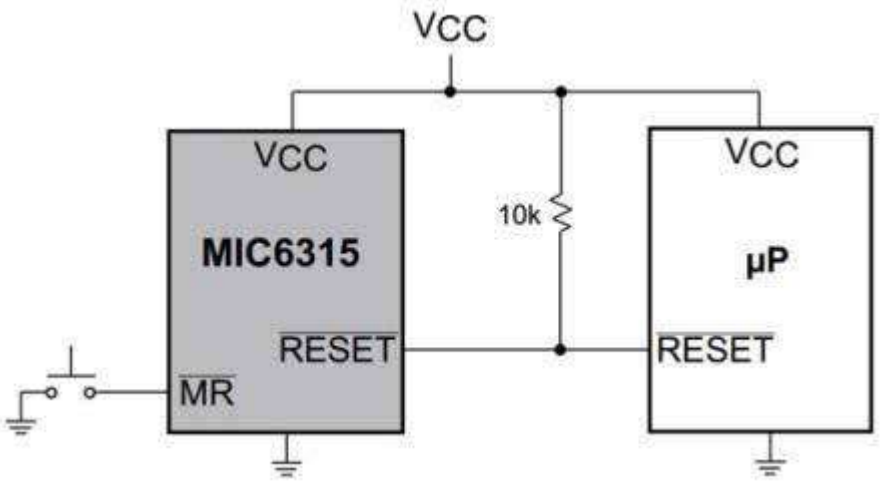

<< BACK

MIC2774L

Dual Micro-Power Low Voltage Supervisor

Online Datasheet

Features:

- Monitors two independent power supplies for –
  - under-voltage conditions
- One fixed and one user adjustable input
- Choice of factory-programmed thresholds
- Adjustable input can monitor supplies as low as –
  - 0.3V
- Generates 140ms (minimum) power-on reset –
  - pulse
- Inputs may be pulled above VDD (7V abs. max.)
- /RST output valid down to 1.2V
- Ultra-low supply current, 3.5µA typical
- Rejects brief input transients
- 5-lead SOT-23 package
- Pin compatible upgrade for MAX6306/09/12

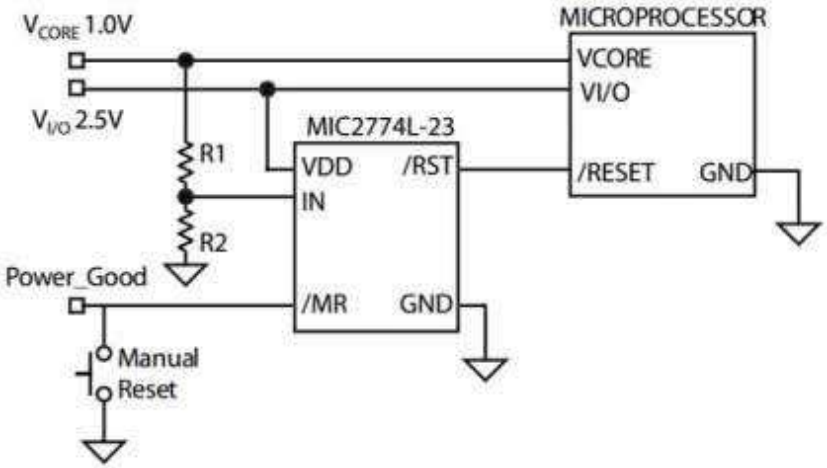

<< BACK

MIC2774H

Dual Micro-Power Low Voltage Supervisor

Online Datasheet

Features:

- Monitors two independent power supplies for –
  - under-voltage conditions
- One fixed and one user adjustable input
- Choice of factory-programmed thresholds
- Adjustable input can monitor as low as 0.3V
- Generates 140ms (min) power-on reset pulse
- Choice of active-high, active-low, or open-drain –
  - active low reset outputs
- Inputs may be pulled above VDD (7V abs. max.)
- /RST output valid down to 1.2V
- Ultra-low supply current, 3.5µA typical
- Rejects brief input transients
- 5-lead SOT-23 package
- Pin compatible upgrade for MAX6306/09/12

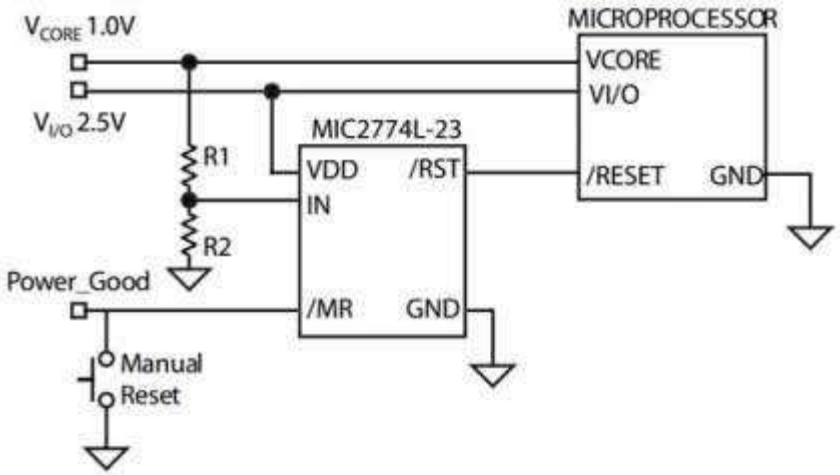

<< BACK

MIC2777

Dual Micro-Power Low Voltage Supervisor

Online Datasheet

Features:

- Monitors two independent power supplies for –
  - under-voltage conditions
- One fixed and one user adjustable input
- 1.5% theshold accuracy
- Choice of factory-programmed thresholds
- User-adjustable input can monitor supplies –
  - as low as 0.3V
- Generates 140ms (min) power-on RESET pulse
- Manual reset capability
- Input may be pulled above VDD (abs. max.)
- /RST output valid down to 1.2V
- Ultra-low supply current, 3.5µA typical
- Rejects brief input transients
- 5-pin SOT-23 package

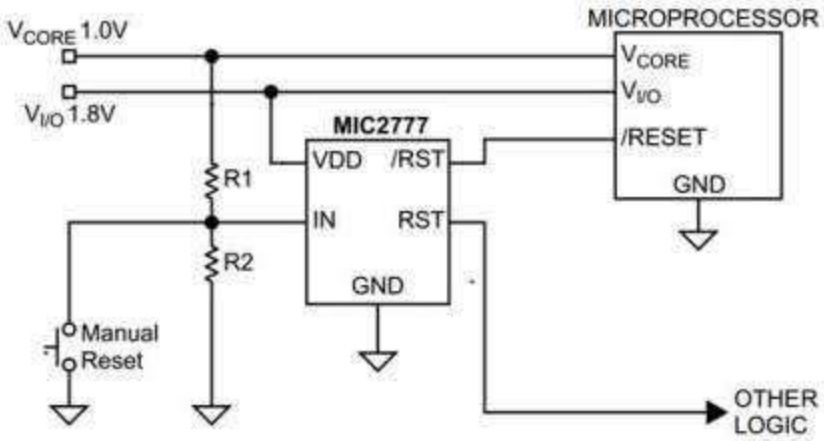

<< BACK

MIC2772

Dual Voltage Supervisor

Online Datasheet

Features:

- Two independent voltage supervisors
- Directly replaces discrete supervisors
- Generates power-on reset pulses
- De-bounced manual reset Inputs
- Choice of voltage thresholds
- 20, 140, or 1100ms reset timeouts
- Reset output may be pulled above VCC
- Rejects brief input transients
- Ultra-small 2mm x 2mm MLF® package

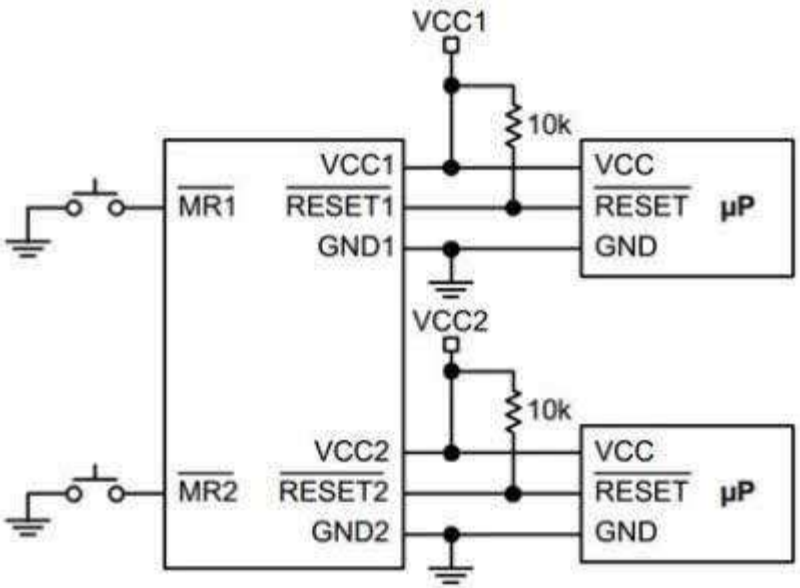

<< BACK

MIC2774N

Dual Micro-Power Low Voltage Supervisor

Online Datasheet

Features:

- Monitors two independent power supplies for –
  - under-voltage conditions
- One fixed and one user adjustable input
- Choice of factory-programmed thresholds
- Adjustable input can monitor as low as 0.3V
- Generates 140ms (min) power-on reset pulse
- Manual reset input
- Inputs may be pulled above VDD (7V abs. max.)
- /RST output valid down to 1.2V
- Ultra-low supply current, 3.5µA typical
- Rejects brief input transients
- 5-lead SOT-23 package
- Pin compatible upgrade for MAX6306/09/12

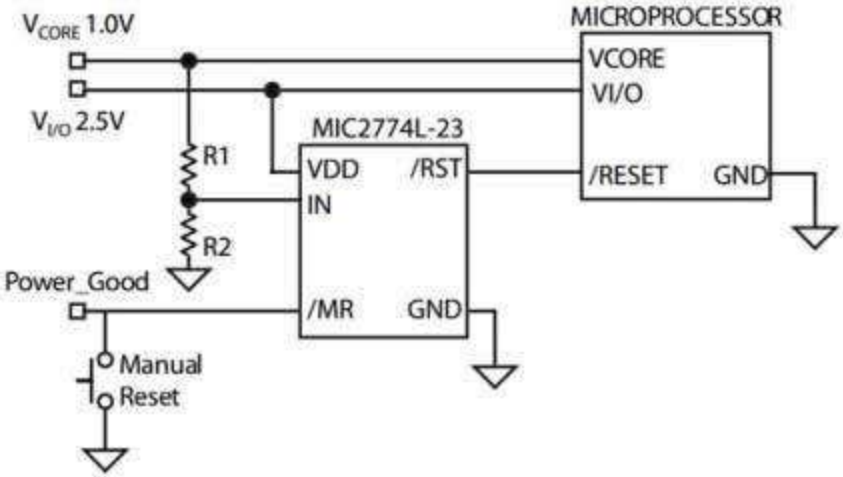

<< BACK

MIC2782

Dual-Input Push Button Reset IC with Immediate and Delayed Outputs

Online Datasheet

Features:

- 1.5V to 5.5V Operating Supply Voltage Range
- 2.2µA Supply Current with /MR1, /MR2 not –
  - asserted
- Factory programmed setup periods of 6s, 8s, -
  - 10s, or 12s
- Factory programmed reset timeout periods of –
  - 0.5s, 1s, or 2s
- Integrated 65kΩ /MR1 and /MR2 Pull-Up –
  - Resistors
- RESET asserts after /MR1 and /MR2 are –
  - asserted low for a setup period
- ANDOUT asserts after /MR1 and /MR2 are asserted low for –
  - a de-bounce time (1.5ms)

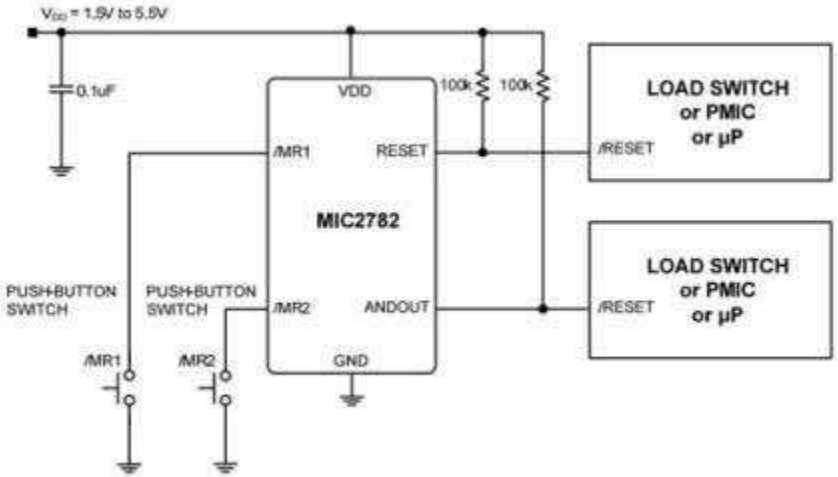

<< BACK

MIC2790/1/3

Supervisor with High-Accuracy Ultra-Fast Propagation Delay Reset Delay

Online Datasheet

Features:

- 1.5V to 5.5V operating supply voltage range
- Ultra-fast propagation delay (1µs typically)
- 0.4V reference voltage (SNS pin)
  - ±1.0% threshold accuracy from -40ºC to –- +125ºC
  - Monitored voltage range from 0.4V to 5.5V
- Active-high enable input pin (MIC2793 only)
- The MIC2790/1/3 features multiple options:
  - Open-drain active-low (/RESET)
  - Push-pull active-low (/RESET)
  - Push-pull active-high (RESET)
- -40ºC to +125ºC junction temperature range
- 6-pin TSOT-23 (MIC2790)
- 6-pin 2×2mm Thin DFN (MIC2790)
- 6-pin 1.6×1.6mm Thin DFN (MIC2791)
- 8-pin 2× 2mm Thin DFN (MIC2793)

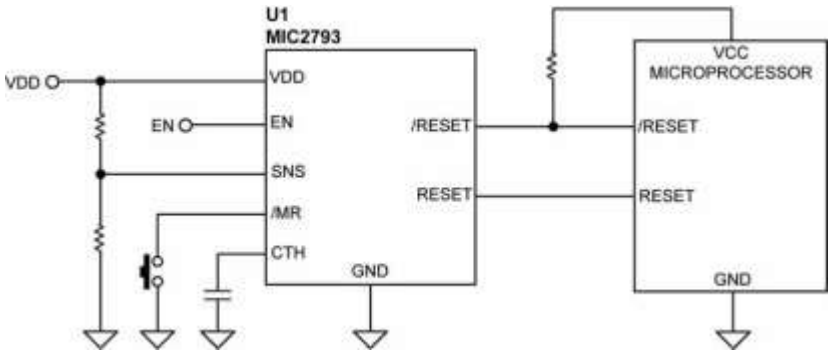

<< BACK

MIC79110

Simple 1.2A Linear Li-Ion Battery Charger

Online Datasheet

Features:

- Input voltage range: 2.5V to 16V
- High voltage accuracy ±0.75%, -5ºC to +60ºC
- Current Limit ±5% accurate from 5ºC to +125ºC
- Programmable end-of-charge flag
- Analog output proportional to output current
- Adjustable and fixed 4.2V output
- 1.2A output current
- Excellent line and load regulation specifications
- Reverse current and protection
- Thermal shutdown and current limit protection
- Tiny 10-pin 3mm x 3mm MLF® package
- Junction temperature range: -40ºC to +125ºC

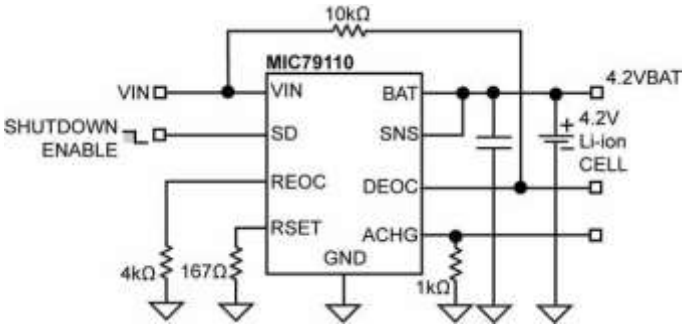

<< BACK

MIC79050

Simple Lithium-Ion Battery Charger

Online Datasheet

Features:

- High accuracy: ±0.75% over -5ºC to +60ºC
- Zero off-mode current
- 10µA reverse leakage
- Ultra-low 380mV dropout at 500mA
- Wide input voltage range
- Logic controlled enable input (8-pin devices – - only)
- Thermal shutdown and current limit protection
- Power MSOP-8, Power SOIC-8, and SOT-223
- Pulse charging capability

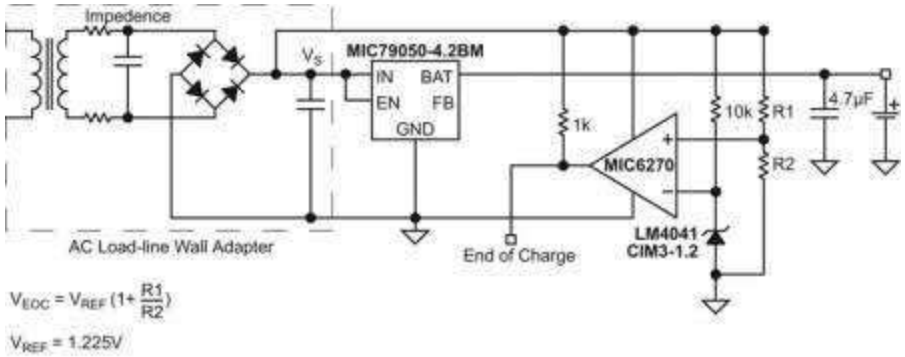

<< BACK

MIC5162

Dual Regulator Controller for DDR3 GDDR3/4/5 Memory

Online Datasheet

Features:

- Input voltage range: 1.35V to 6V
- Up to 7A VTT Current
- Tracking programmable output
- Wide bandwidth
- Logic controlled enable input
- Requires minimal external components
- DDR, DDR2, DDR3, memory termination
- -40ºC < TJ < +125ºC
- JEDEC Compliant Bus termination for –
  - SCSI, GTL, SSTL, HSTL, LV-TTL, -
  - Rambus, LV-PECL, LV-ECL, etc
- Tiny MSOP-10 package

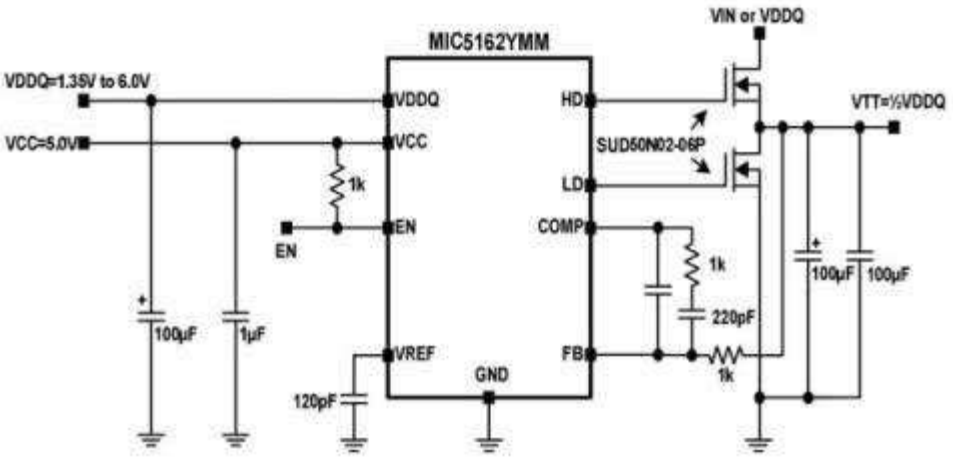

<< BACK

MIC5163

Dual Regulator Controller for DDR3 GDDR3/4/5

Online Datasheet

Features:

- 0.75V to 6V input supply voltage
- Memory termination for: DDR3, -- GDDR3/4/5
- Tracking programmable output
- Logic controlled enable input
- Wide bandwidth
- Minimal external components –- required
- Tiny MSOP-10 package
- -40ºC < TJ < +125ºC

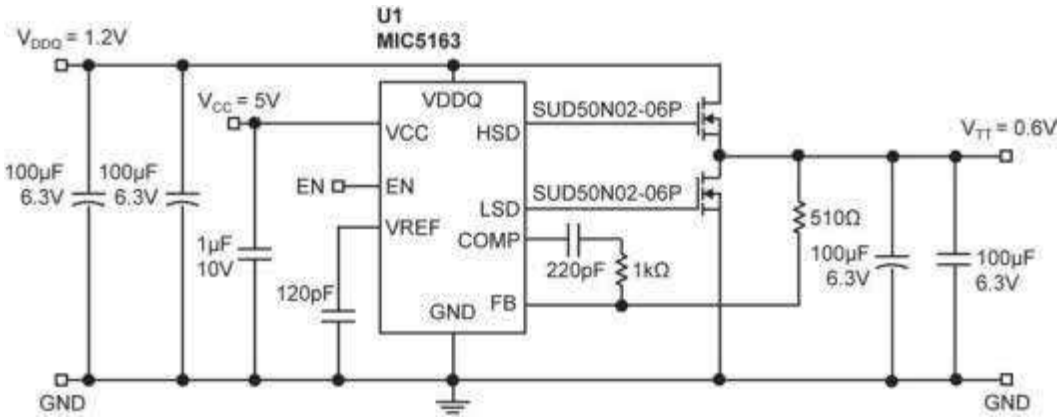

<< BACK

MIC5164

Dual Regulator Controller for DDR3 GDDR3/4/5

Online Datasheet

Features:

- Input voltage range: 1.35V to 6V
- Up to 7A VTT Current
- Tracking programmable output
- Power Good (PG) signal
- Wide bandwidth
- Logic controlled enable input
- Requires minimal external components
- DDR, DDR2, DDR3, memory termination
- -40ºC < TJ < +125ºC
- JEDEC-compliant bus termination for SCSI, GTL, SSTL, HSTL, -
  - LV-TTL, Rambus, LV-PECL, LV-ECL, etc
- Tiny MSOP-10 package

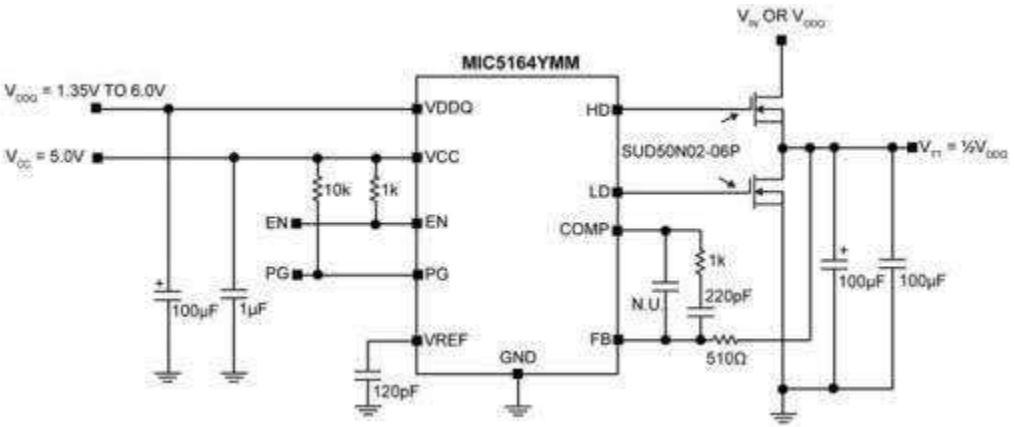

<< BACK

MIC5165

Dual Regulator Controller for DDR3 GDDR3/4/5

Online Datasheet

Features:

- Input voltage range: 0.75V to 6V
- Up to 7A VTT Current
- Tracking programmable output
- Power Good signal
- Wide bandwidth
- Logic-controlled enable input
- Requires minimal external components
- DDR3, GDDR3/4/5 memory termination
- -40ºC < TJ < +125ºC
- Tiny MSOP-10 package

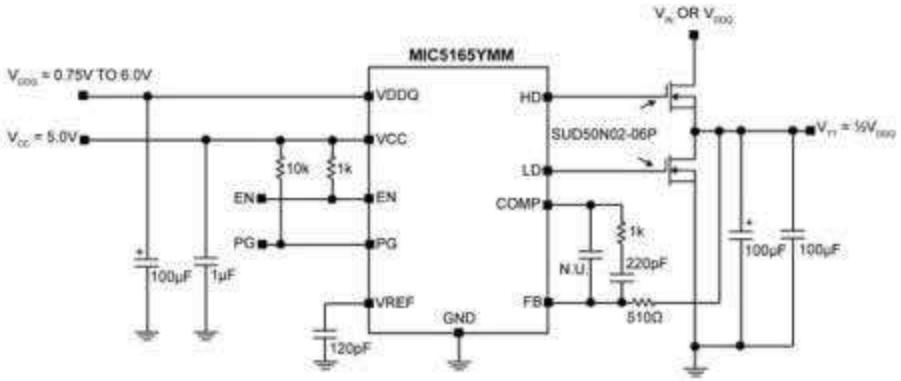

<< BACK

MIC5167

1MHz 6A Integrated Switch Synch. Buck DDR Memory Terminator

Online Datasheet

Features:

- Input voltage range: 2.6V to 5.5V
- VTT voltage adjustable down to 0.35V
- Output load current up to ±6A
- Power Good fault flag
- Efficiency > 94% across a broad load range
- Ultra fast transient response
- Easy RC compensation
- 100% maximum duty cycle
- Fully integrated MOSFET switches
- Micropower shutdown
- Thermal shutdown and current-limit protection
- 24-pin 4mm x 4mm MLF®
- -40ºC to +125ºC junction temperature range

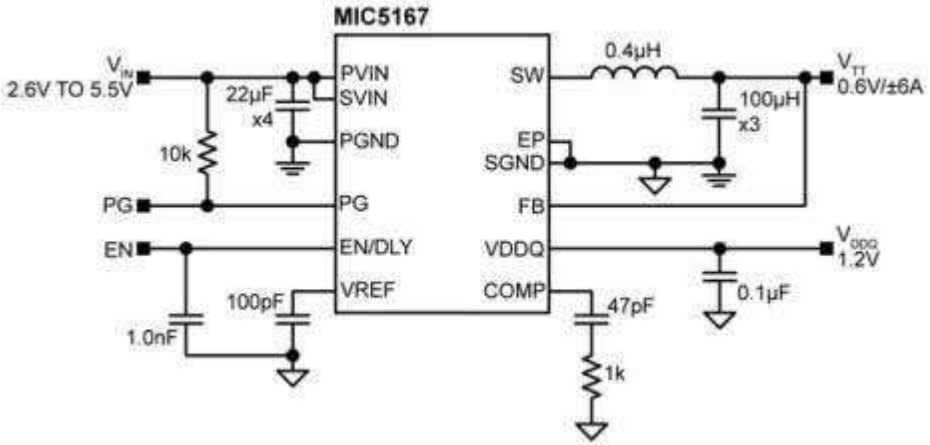

<< BACK

MIC5166

3A High-Speed Low VIN DDR Terminator

Online Datasheet

Features:

- Operating voltage range:
- VDDQ Supply: 0.9V to 3.6V
- Bias Supply: 2.5V to 5.5V
- High output voltage accuracy:
- 0.015% line regulation
- 1.5% load regulation
- Logic level enable input
- Power Good (PG)
- High bandwidth – very fast transient response
- Stable with two 10µF ceramic output capacitors
- Two 10µF output capacitors used in most –
  - applications
- Thermally enhanced 3mm × 3mm MLF®
- Junction temperature range -40ºC to +125ºC

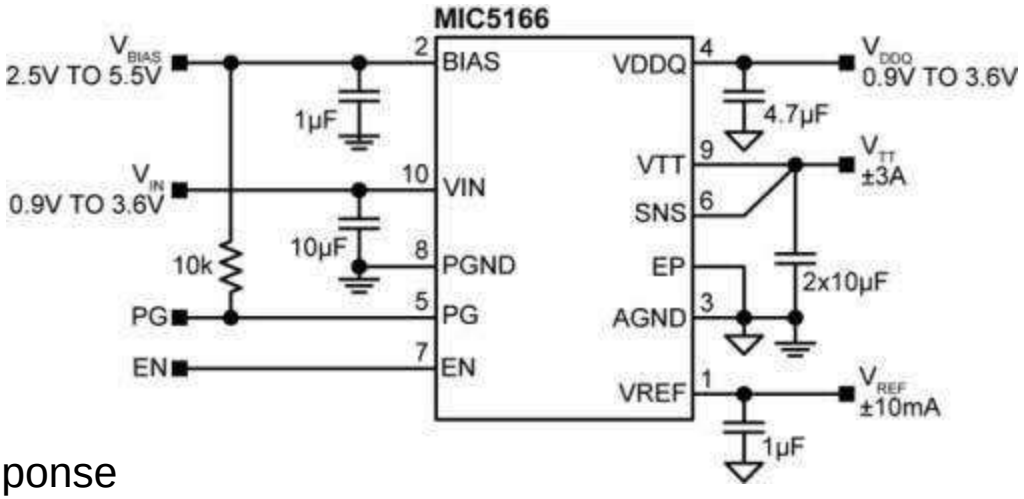

<< BACK

MIC5204

SCSI-II Active Terminator

Online Datasheet

Features:

- ±1% output voltage accuracy
- Guaranteed 500mA output
- Low quiescent current
- Low dropout voltage
- Extremely tight load and line regulation
- Very low temperature coefficient
- Current and thermal limiting
- Zero off-mode current
- Logic-controlled electronic shutdown
- Available in SO-8 and SOT-223 packages

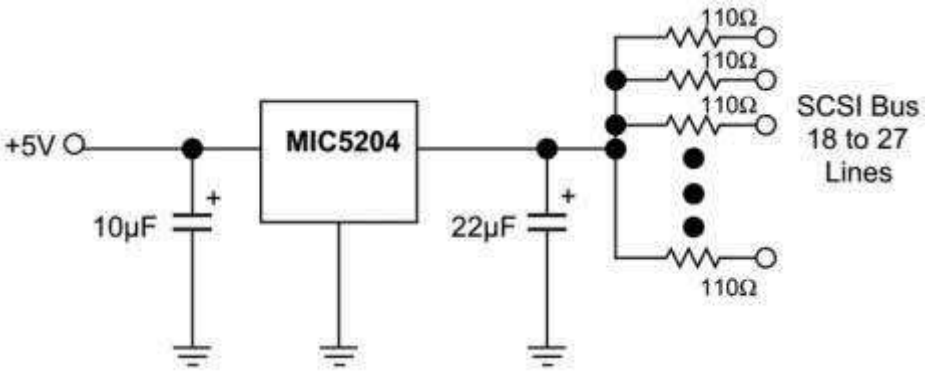

<< BACK

MIC74

2-Wire Serial I/O Expander & Fan Controller

Online Datasheet

Features:

- Provides eight bits of general purpose I/O
- Built in fan speed control logic (optional)
- 2-wire SMBus™/I2C™ compatible serial –
  - interface plus interrupt output
- 2.7V to 3.6V operating voltage range
- 5V-tolerant I/O
- Low quiescent current: 2µA (typical)
- Bit-programmable I/O options:
  - Input or output
  - Push-pull or open-drain output
  - Interrupt on input changes
- Outputs can directly drive LEDs (10mA IOL)
- Up to 8 devices per bus

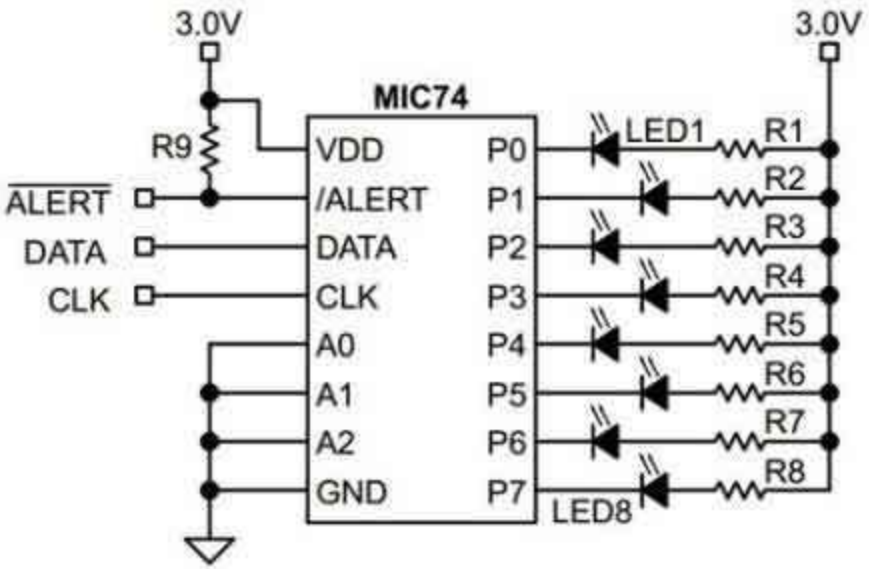

<< BACK

MIC184

Local/Remote Thermal Supervisor

Online Datasheet

Features:

- Measures local and remote temperatures
- Pin and software backward –
  - compatible to LM75
- 9-bit sigma-delta ADC
- 2-wire I2C/SMBus compatible –
  - interface
- Programmable thermostatic settings for either –
  - internal or external zone
- Open-drain comparator/interrupt output pin
- Interrupt mask and status bits
- Low-power shutdown mode
- Fail-safe response to diode faults
- 2.7V to 5.5V power supply range
- 8-Lead SOP and MSOP packages

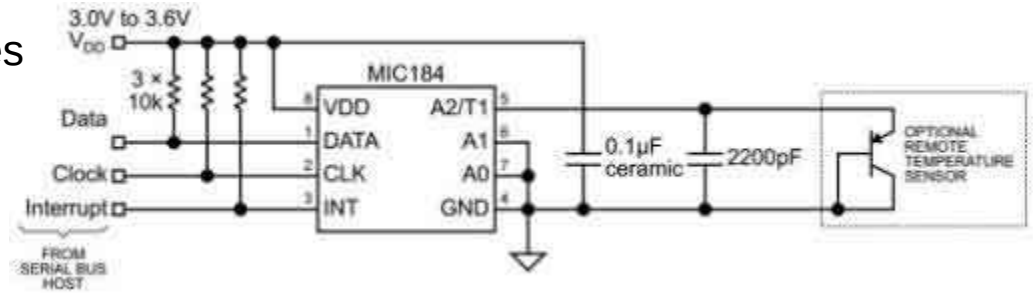

<< BACK

MIC280

Precision Thermal Supervisor

Online Datasheet

Features:

- Measures local and remote –
  - temperature
- Highly accurate remote sensing ±1ºC –
  - max., 60ºC to 100ºC
- Superior noise immunity for reduced –
  - temperature guardbands
- 9-bit to 12-bit temperature resolution for –
  - remote zone
- Fault queues to further reduce nuisance tripping
- Programmable high, low, and over-temperature thresholds for –
  - each zone
- SMBus 2.0 compatible serial interface including device timeout –
  - to prevent bus lockup
- 3.0V to 3.6V power supply range
- SOT23-6 package

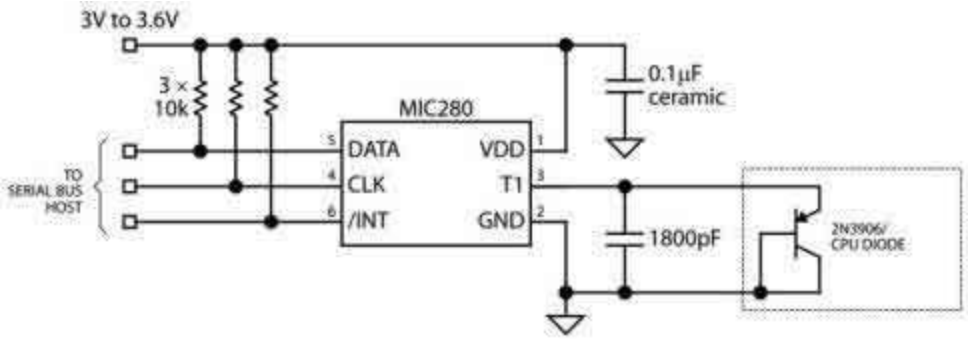

<< BACK

MIC74

2-Wire Serial I/O Expander and Fan Controller

Online Datasheet

Features:

- Provides eight bits of general purpose I/O
- Built in fan speed control logic (optional)
- 2-wire SMBus™/I2C™ compatible serial –
  - interface plus interrupt output
- 2.7V to 3.6V operating voltage range
- 5V-tolerant I/O
- Low quiescent current: 2µA (typical)
- Bit-programmable I/O options:
- Input or output
- Push-pull or open-drain output
- Interrupt on input changes
- Outputs can directly drive LEDs (10mA IOL)
- Up to 8 devices per bus

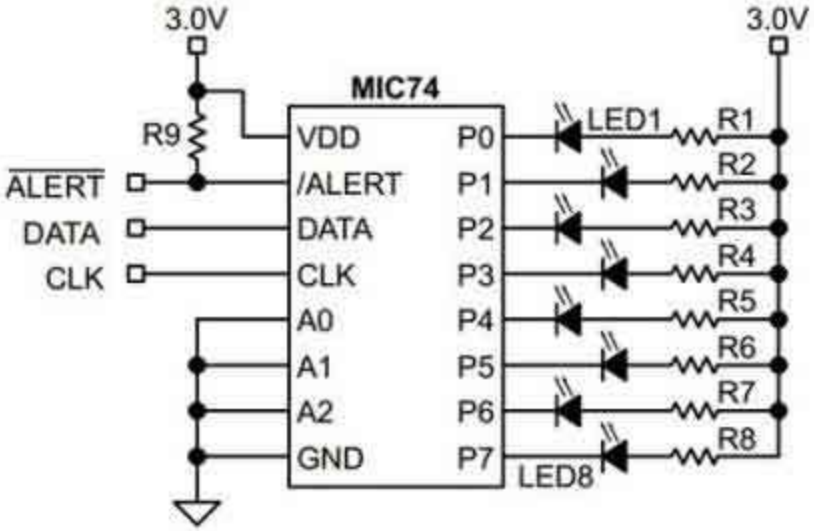

<< BACK

MIC4832

Low Noise 220VPP EL Driver

Online Datasheet

Features:

- 1.8V to 5.5V DC input voltage
- 220VPP output voltage capable
- Low audible noise EL drive waveform
- Supports EL panel sizes up to 3in² (19cm²)
- Low 25µA operating supply current
- Small inductor size with low profile (220µH)
- Tiny 8-pin 3mm x 3mm MLF® package
- Adjustable boost converter frequency
- Adjustable EL lamp frequency
- 10nA shutdown current

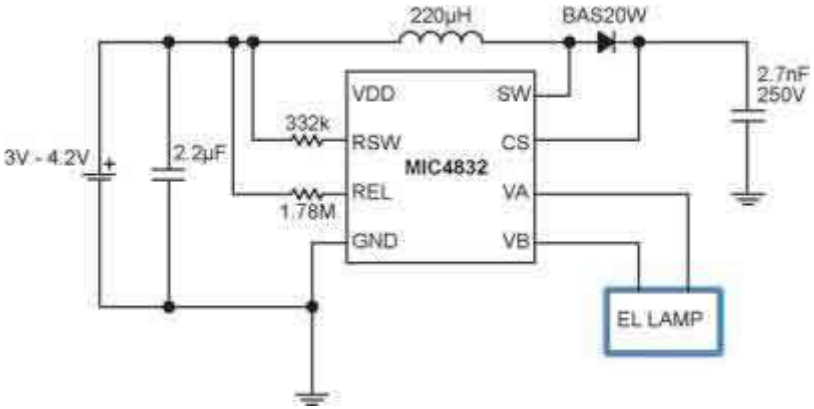

<< BACK

MIC4830

Low Noise 180Vpp EL Driver

Online Datasheet

Features:

- 1.8V to 5.5V input voltage
- 180VPP output voltage
- Low audible noise EL drive waveform
- Supports EL panel sizes up to 4in² (25cm²)
- Low 45µA operating supply current
- Small inductor size with low profile (220µH)
- Tiny 8-pin 3mm x 3mm MLF® package
- Adjustable boost converter frequency
- Adjustable EL lamp frequency
- Low 10nA shutdown current

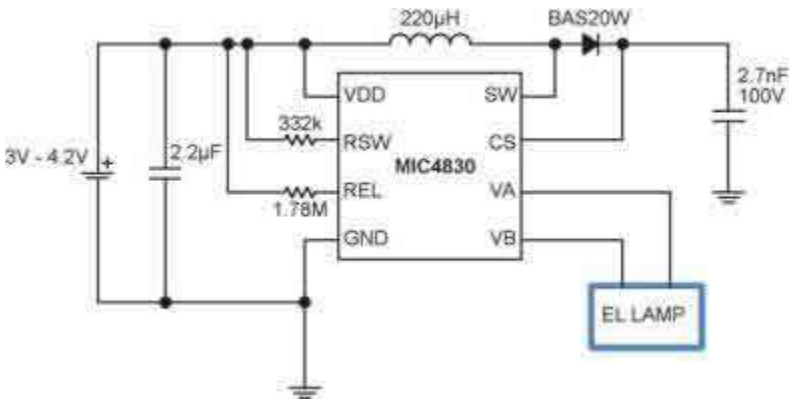

<< BACK

MIC4827

Low Input Voltage 180VPP Output Voltage EL Driver

Online Datasheet

Features:

- 1.8V to 5.5V DC input voltage
- 180VPP regulated AC output waveform
- Independently adjustable EL lamp frequency
- Independently adjustable boost converter –
  - frequency
- 0.1µA shutdown current

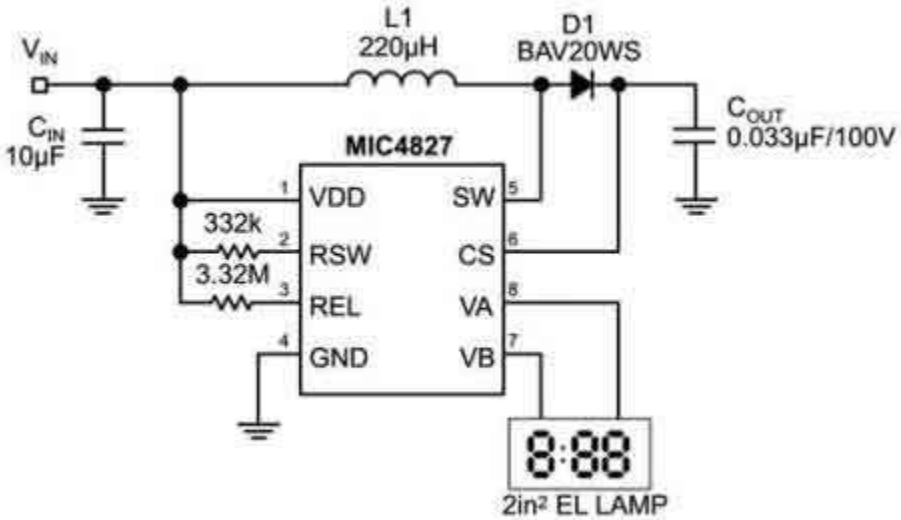

<< BACK

MIC4826

Low Input Voltage 160VPP Output Voltage EL Driver

Online Datasheet

Features:

- 1.8V to 5.5V DC input voltage
- 160VPP regulated AC output waveform
- Independently adjustable EL lamp frequency
- Independently adjustable boost converter –
  - frequency
- 0.1µA shutdown current

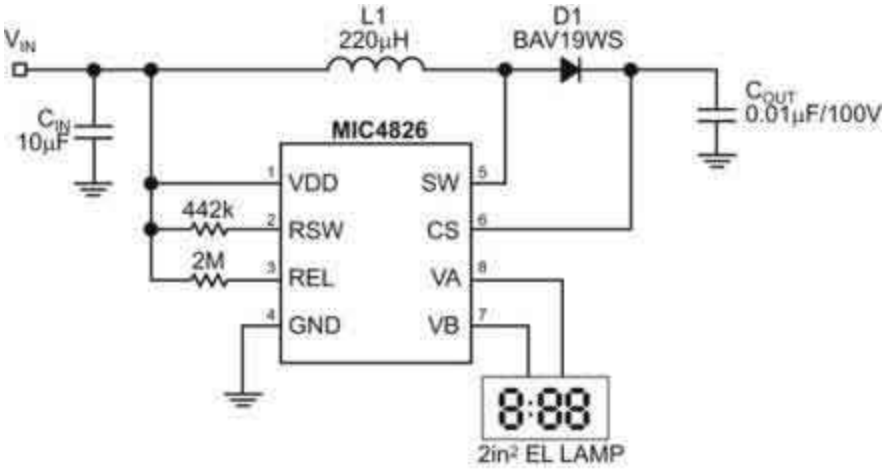

<< BACK

MIC4833

Low Noise Dual 220Vpp EL Driver

Online Datasheet

Features:

- Drives two EL panels
  - Up to 4in² each at full brightness
- Independent input control for each of the two – - panels and allows PWM dimming.
- 220VPP regulated AC output waveform
- 2.3V to 5.8V DC input voltage
- Wave-shaping circuit to reduce audible noise
- Adjustable slew rate for audible noise reduction
- Single inductor to power both panels
- 0.1µA typical shutdown current
- 12-pin 3mm x 3mm MLF® package
- -40ºC to +125ºC junction temperature range
- Independently adjustable boost converter and EL panel frequency

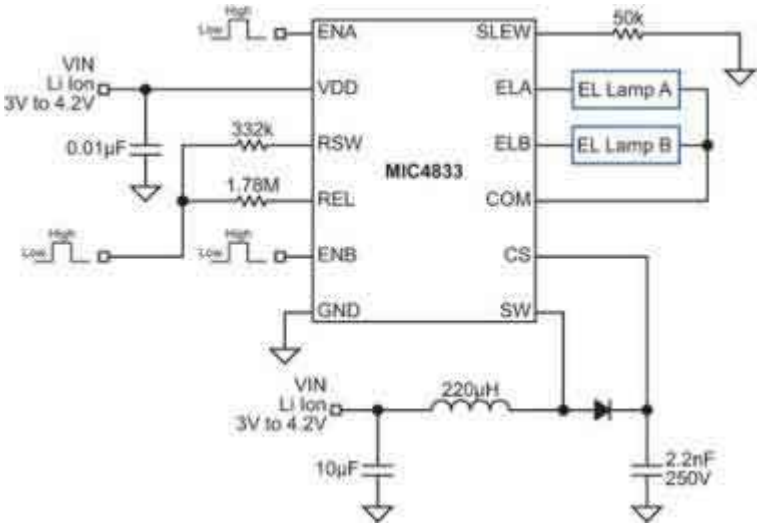

<< BACK

MIC3263

6-Ch WLED Driver for Backlighting with Flicker-Free Dimming

Online Datasheet

Features:

- 6V to 40V wide input voltage range
- Drives six channels of up to 10 white LEDs
- Programmable WLED current from 15mA to –
  - 30mA
- Highly reliable operation with open and short –
  - LEDs
- Accurate 16 dimming log levels sets the dimming –
  - ratio from 1% to 100%
- Flicker-Free Dimming filters the jitter from the –
  - dimming control input signal and eliminates –
  - dimming flicker
- Accurate LED channel current matching ±3%
- Accurate initial LED current setting ±2%
- High efficiency up to 90%
- Low (<40µA) shutdown current over temperature
- -40ºC to +125ºC junction temperature range
- Available in 24-pin 4mm x 4mm MLF® package

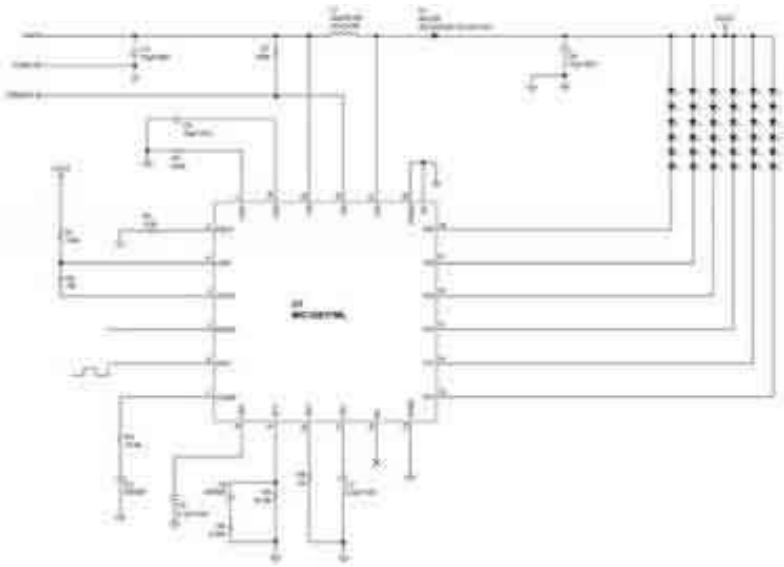

<< BACK

HV9985

3-Ch Closed-loop Switch Mode LED Driver

Online Datasheet

Features:

- Switch mode controller for single-switch –
  - converters
- Optimized for driving Logic Level FETs
- Typical +/-2% absolute and string-to-string -
  - current accuracy
- High PWM dimming ratio up to 5000:1
- 10-40V input range
- Constant frequency operation up to 1Mhz
- On –chip clock or external clock option
- Programmable slope compensation
- Linear and PWM dimming
- SCP & OVP
- Hiccup mode protection
- 40-Lead QFN (6x6) package

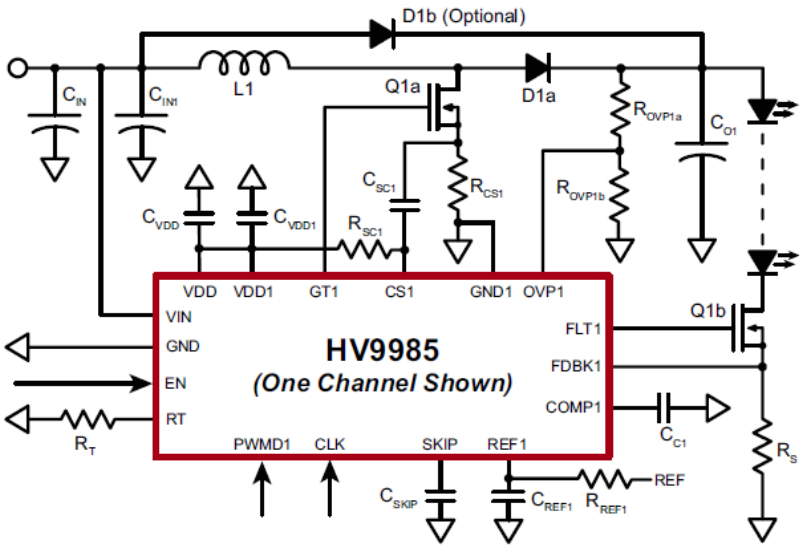

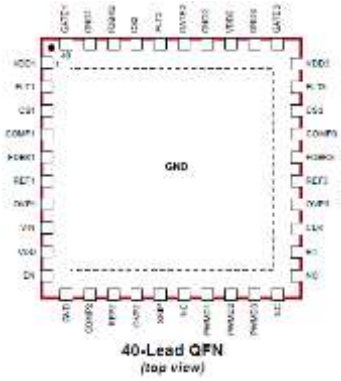

<< BACK

MIC3223

High Power Boost LED Driver with Integrated FET

Online Datasheet

Features:

- 4.5V to 20V supply voltage
- 1MHz switching frequency
- 100mΩ/3.5A internal power FET switch
- LEDs can be dimmed with a PWM signal
- Externally programmable soft-start
- Protection features that include:
  - Output over voltage protection (OVP)
  - Under voltage lockout (UVLO)
  - Over temperature protection
- Junction temperature range: -40ºC to +125ºC
- Available in an exposed pad 16-pin –
  - TSSOP package
- 200mV feedback voltage
- Step-up output voltage (boost) up to 37V

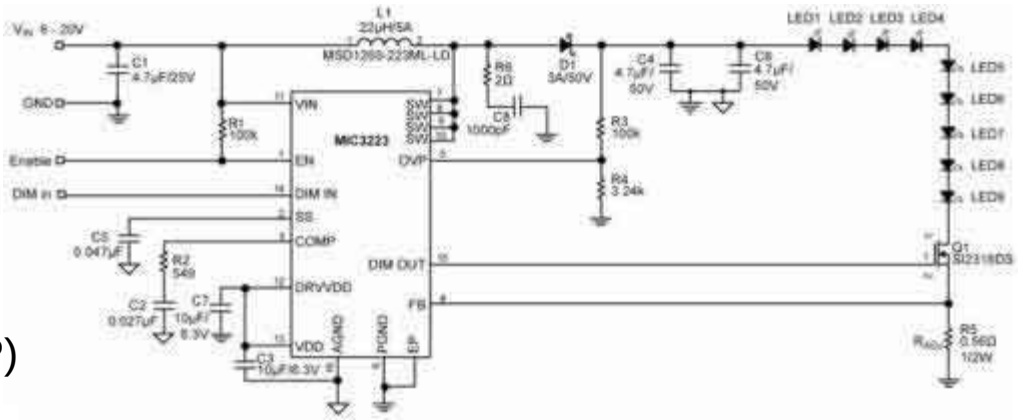

<< BACK

MIC2282

Single-Cell Ultra Low EMI Boost LED Driver

Online Datasheet

Features:

- Operates from a single-cell supply –
  - (VIN = 0.9V to 15V)
- Ultra Low EMI
- 120µA typical quiescent current
- Adjustable output voltages
- 220mV sense voltage
- 20kHz switching frequency
- Over temperature protection
- 8-pin MSOP package
- Low component count solution

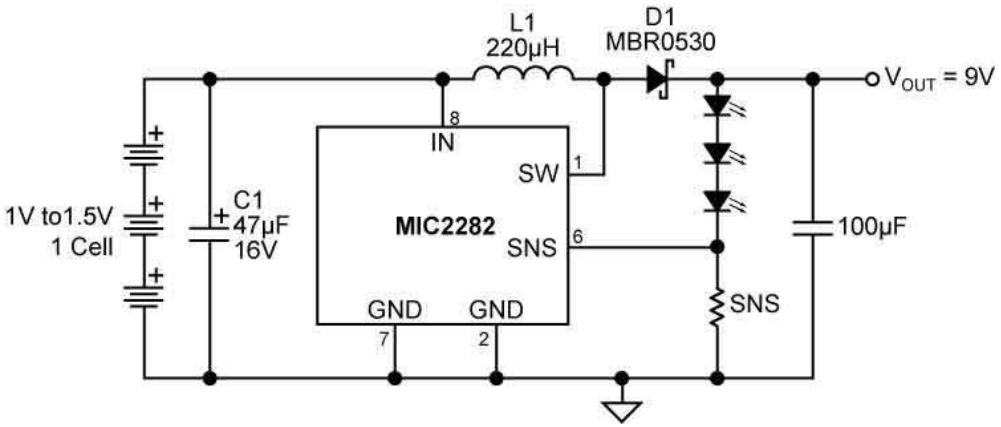

<< BACK

MIC2298

3.5A Minimum 1MHz Boost High Brightness White LED Driver

Online Datasheet

Features:

- 3.5A minimum switch current delivers at least -
  - 7W of output power over temperature
- 200mV ±10% feedback voltage
- 2.5V to 10V input voltage
- Output voltage up to 30V (max)
- 12-pin 3mm x 3mm leadless MLF® package
- Output over voltage protection (OVP)
- <1% line regulation
- 1µA shutdown current
- Over-temperature protection
- Externally programmable soft-start
- Under voltage lockout (UVLO)
- -40ºC to +125ºC junction temperature range

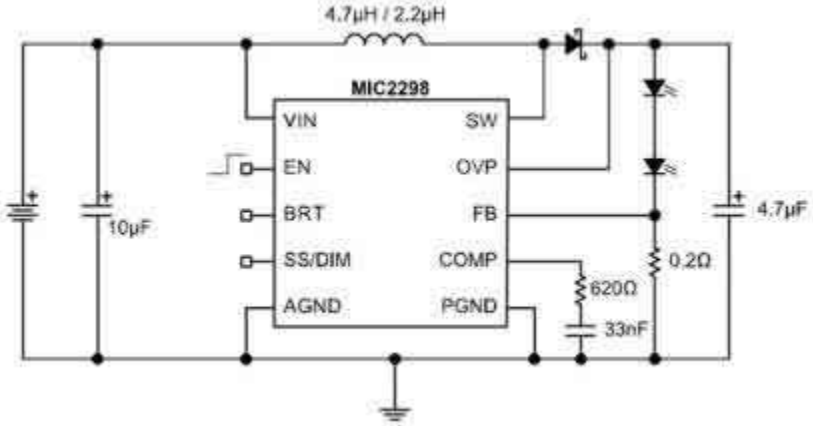

<< BACK

MIC2299

3.5A Minimum 2MHz High Brightness LED Driver

Online Datasheet

Features:

- Programmable current control
- 200mV ±10% feedback voltage
- 2.5V to 10V input voltage
- Output over voltage protection (OVP)
- Output voltage up to 30V (max)
- Fixed 2.0MHz Operation
- Guaranteed 3.5A switch current over –
  - temperature
- Solution size of just 0.25in² (1.6cm²)
- Output power range of 7W to 12W
- <1% line regulation
- 1µA shutdown current
- Under-voltage lockout (UVLO)
- 12-pin 3mm x 3mm leadless MLF® package
- -40ºC to +125ºC junction temperature range

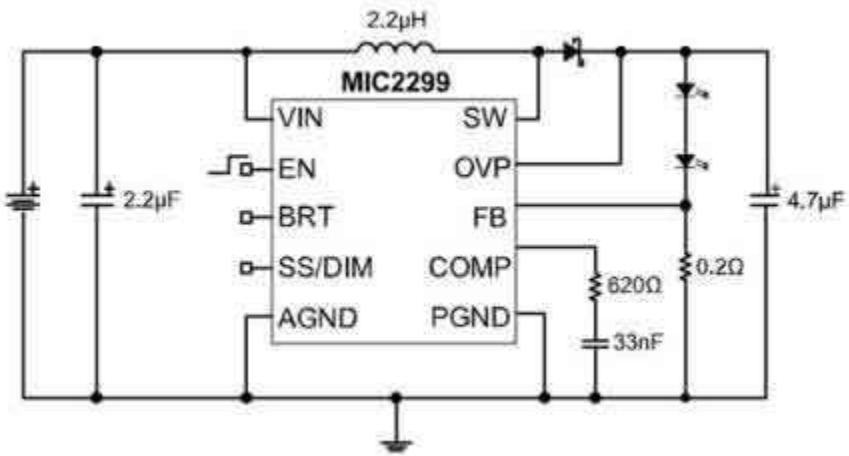

<< BACK

MIC2297

40V PWM Boost Regulator White LED Driver

Online Datasheet

Features:

- 2.5V to 10V input voltage range
- Output voltage up to 40V
- 1.2A switch current
- 600kHz PWM operation
- Trimmed 200mV feedback voltage
- Output over voltage protection (fixed or – - adjustable)
- PWM brightness control
- DAC brightness control
- <1% line regulation
- 1µA shutdown current
- Over temperature protection
- UVLO
- 10-pin 2.5mm x 2.5mm MLF® package
- -40ºC to +125ºC junction temperature range

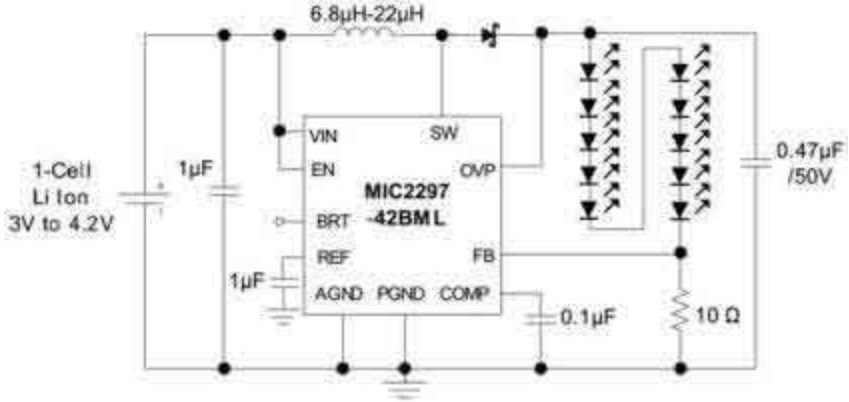

<< BACK

MIC2291

1.2A PWM Boost Regulator Photo Flash LED Driver

Online Datasheet

Features:

- 2.5V to 10V input voltage
- Output voltage up to 34V
- 1.2A switch current
- 1.2MHz PWM operation
- 95mV feedback voltage
- Over voltage protection (OVP)
- Options for 15V and 34V
- Stable with ceramic capacitors
- <1% line and load regulation
- 1µA shutdown current
- UVLO
- Low-profile Thin SOT23-5 package option
- 2mm x 2mm MLF® package option
- -40ºC to +125ºC junction temperature range

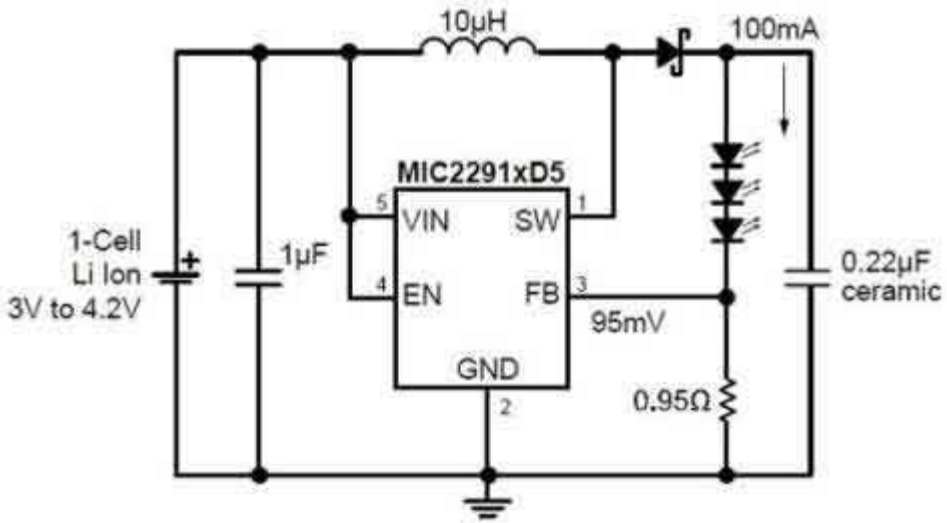

<< BACK

MIC2287

1.2MHz PWM White LED Driver with OVP in 2mm x 2mm MLF® & Thin SOT-23

Online Datasheet

Features:

- 2.5V to 10V input voltage
- Output voltage up to 34V
- Over 500mA switch current
- 1.2 MHz PWM operation
- 95mV feedback voltage
- Output over voltage protection (OVP)
- Options for 15V, 24V, and 34V OVP
- <1% line and load regulation
- <1µA shutdown current
- Over-temperature protection
- UVLO
- Low profile Thin SOT-23-5 package option
- 8-lead 2mm x 2mm MLF® package option
- -40ºC to +125ºC junction temperature range

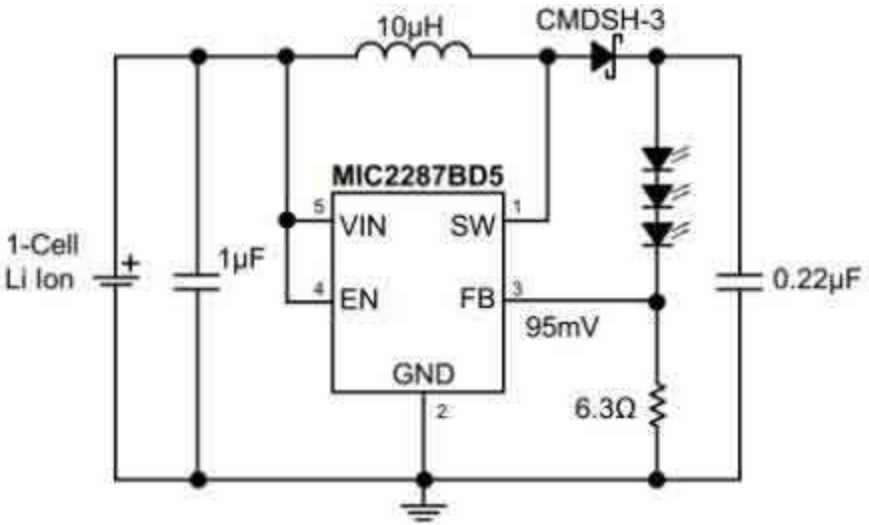

<< BACK

MIC2287C

1.2MHz PWM White LED Driver with OVP

Online Datasheet

Features:

- 2.5V to 10V input voltage
- Output voltage up to 34V
- Over 500mA switch current
- 1.2 MHz PWM operation
- 95mV feedback voltage
- Output over voltage protection (OVP)
- Options for 15V, 24V, and 34V OVP
- Over-temperature protection
- UVLO
- Low profile Thin SOT-23-5 package option
- 8-lead 2mm x 2mm MLF® package option
- -40ºC to +125ºC junction temperature range
- For higher performance specifications see the MIC2287

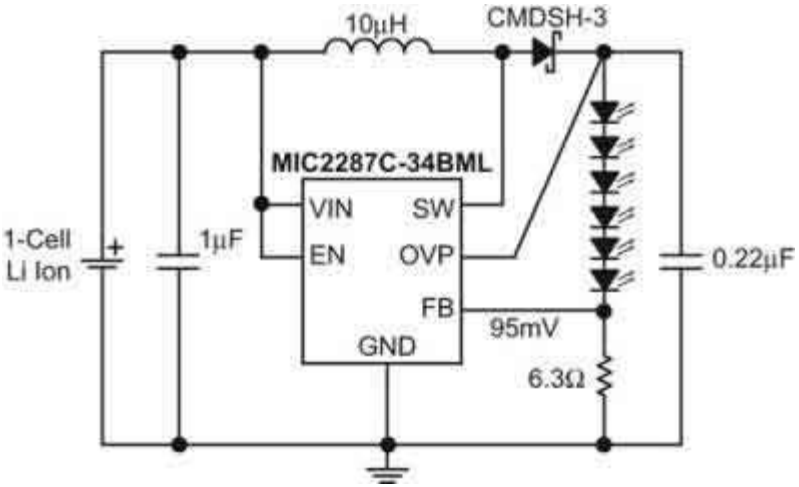

<< BACK

MIC2289

White LED Driver with Internal Schottky Diode & OVP

Online Datasheet

Features:

- 2.5V to 10V input voltage
- Output voltage up to 34V
- Internal Schottky diode
- 15V, 24V, 34V output OVP options
- 1.2MHz PWM operation
- Over 500mA switch current
- 95mV feedback voltage
- <1% line and load regulation
- <1µA shutdown current
- Over-temperature protection
- UVLO
- 8-pin 2mm x 2mm MLF® package
- -40ºC to +125ºC junction temperature range

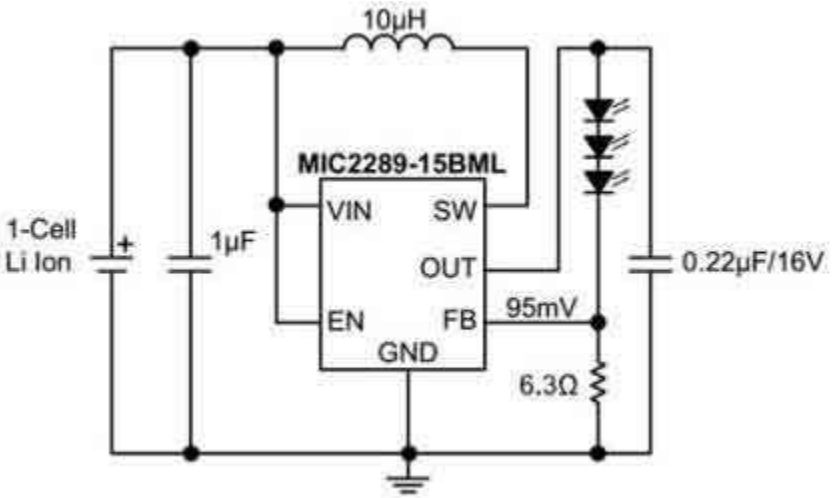

<< BACK

MIC2289C

1.2MHz PWM White LED Driver with OVP

Online Datasheet

Features:

- 2.5V to 10V input voltage
- Output voltage up to 34V with OVP
- Internal Schottky diode
- Over 500mA switch current
- 1.2MHz PWM operation
- 95mV feedback voltage
- <1% line and load regulation
- <1µA shutdown current
- Over-temperature protection
- UVLO
- Thin SOT-23 6-pin package
- -40ºC to +125ºC junction temperature range
- For higher performance specifications see the MIC2289

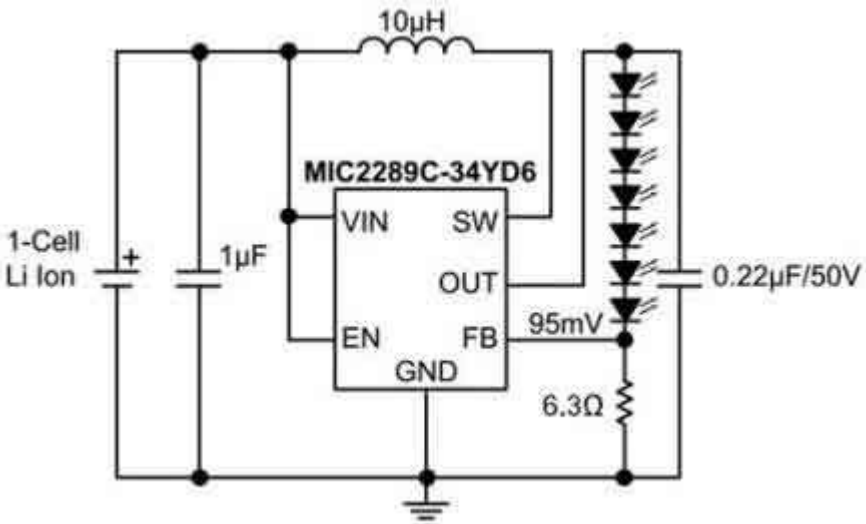

<< BACK

MIC2292/3

High Frequency PWM White LED Drivers w/ Internal Schottky Diode

Online Datasheet

Features:

- 2.5V to 10V input voltage
- Output voltage up to 34V
- Internal Schottky diode
- 1.6MHz PWM operation (MIC2292)
- 2.0MHz PWM operation (MIC2293)
- 15V and 34V output overvoltage protection options
- 500mA switch current rating
- 95mV feedback voltage
- <1% line and load regulation
- <1µA shutdown current
- Over-temperature protection
- OVP, UVLO
- 8-pin 2mm x 2mm MLF® package
- -40ºC to +125ºC junction temperature range

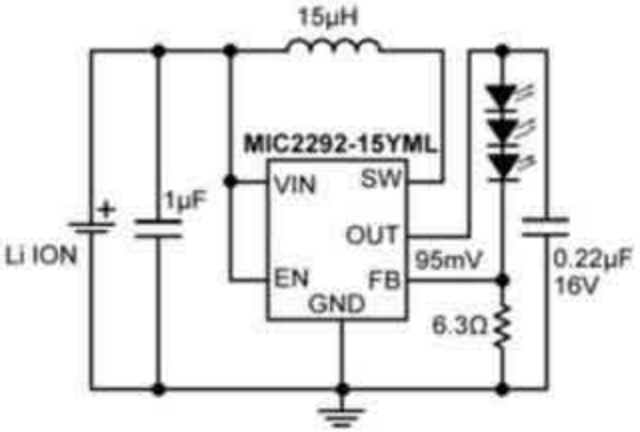

<< BACK

MIC2292C/3C

High Frequency PWM White LED Drivers w/ Internal Schottky Diode

Online Datasheet

Features:

- 2.5V to 10V input voltage
- Output voltage up to 34V
- Internal Schottky diode
- 1.6MHz PWM operation (MIC2292C)
- 2.0MHz PWM operation (MIC2293C)
- 15V and 34V output overvoltage protection –
  - options
- 500mA switch current rating
- 95mV feedback voltage
- <1% line and load regulation
- <1µA shutdown current
- Over-temperature protection
- OVP, UVLO
- 8-pin 2mm x 2mm MLF® package
- -40ºC to +125ºC junction temperature range

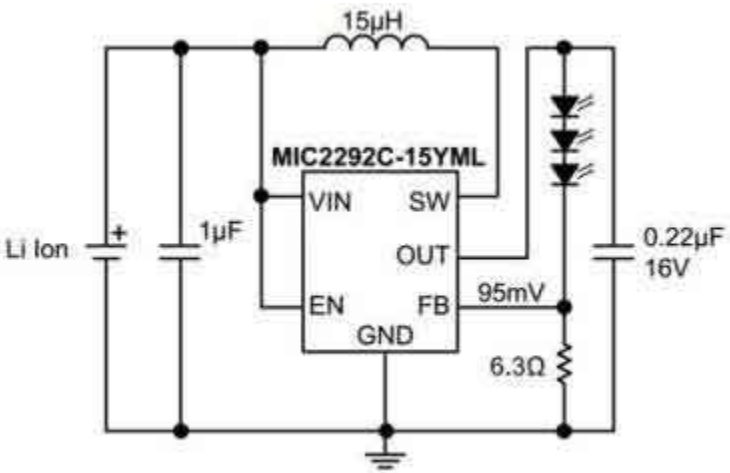

<< BACK

MIC3289

1.2MHz PWM White LED Driver with True 1-Wire Control

Online Datasheet

Features:

- Single wire combines 16 level logarithmic – - brightness and shutdown control
- 16V/24V OVP options supports up to 4 - - and 6 WLEDs
- Start-up in any one of 16 brightness levels
- Internal Schottky diode
- 2.5V to 6.5V input voltage
- 1.2MHz PWM operation
- Over 500mA switch current
- 250mV reference voltage
- ±5% LED current accuracy
- <1µA shutdown current
- UVLO
- Thin SOT23-6L package option
- 2mm x 2mm leadless MLF®-8L package option
- -40ºC to +125ºC junction temperature range

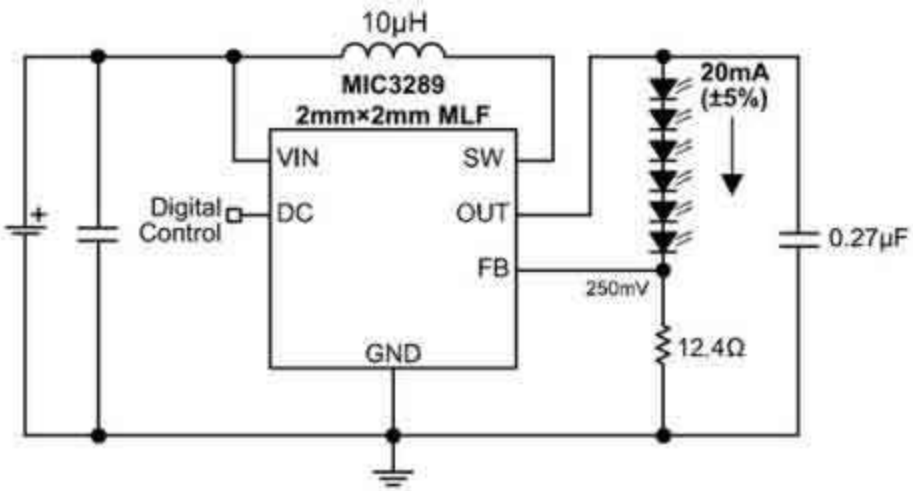

<< BACK

MIC3287

1.2MHz PWM White LED Driver with OVP

Online Datasheet

Features:

- 2.8V to 6.5V input voltage
- 350mA switch current
- Optional 24V output over voltage protection – - (OVP)
- 1.2MHz PWM operation
- 250mV feedback voltage
- <1% line and load regulation
- <1µA shutdown current
- Over-temperature protection
- Under voltage lockout (UVLO)
- Low profile Thin SOT-23 package option
- 8-pin 2mm x 2mm MLF® package option
- -40ºC to +125ºC junction temperature range

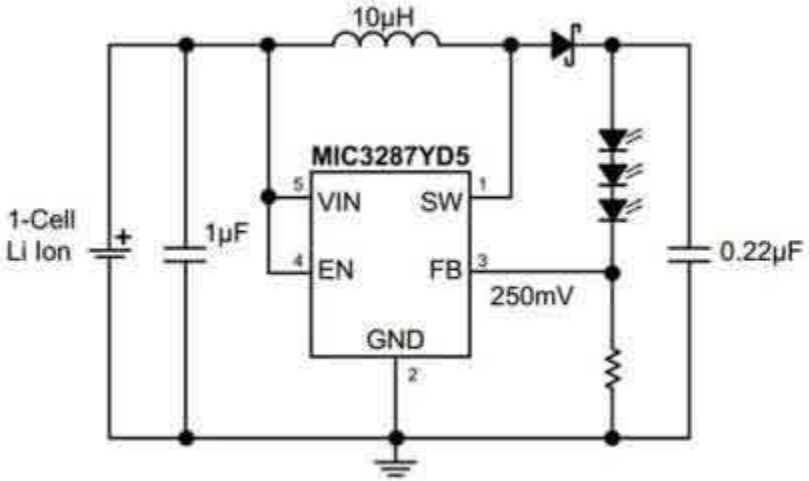

<< BACK

MIC5021

High-Speed High-Side MOSFET Driver

Online Datasheet

Features:

- 12V to 36V operation
- 550ns rise/fall time driving 2000pF
- TTL compatible input with internal pull-down –
  - resistor
- Overcurrent limit
- Gate to source protection
- Internal charge pump
- 100kHz operation guaranteed over full –
  - temperature and operating voltage range
- Compatible with current sensing MOSFETs
- Current source drive reduces EMI

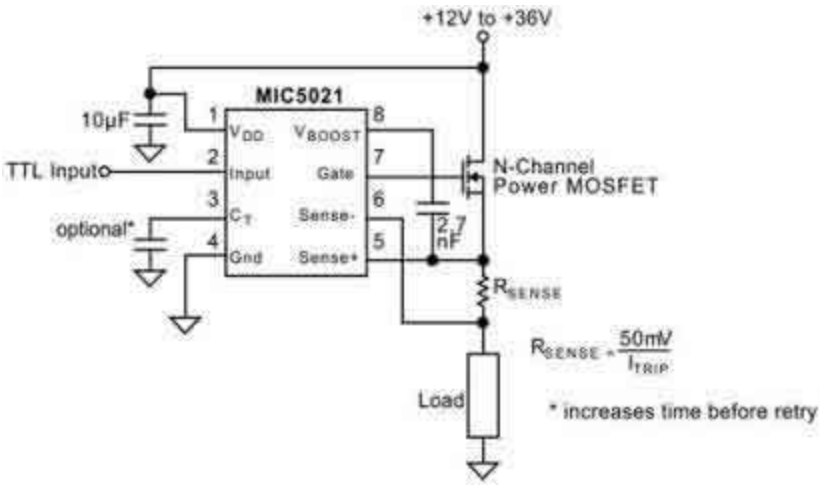

<< BACK

MIC4600

28V Half-Bridge MOSFET Driver

Online Datasheet

Features:

- Adjustable dead time circuitry
- Anti-shoot-through protection
- Internal LDO for single supply operation
- Input voltage range: 4.5V to 28V
- Fast propagation delay: 20ns
- Up to 1.5 MHz operation
- Low voltage logic level inputs for µC or –
  - FPGA driven power solutions
- Independent inputs for low and high side –
  - drivers
- 2Ω gate drive capable of driving 3000pF –
  - load with 15ns rise and fall times
- Low 450µA typical quiescent current
- 3mm x 3mm QFN package
- -40ºC to +125ºC junction temperature range

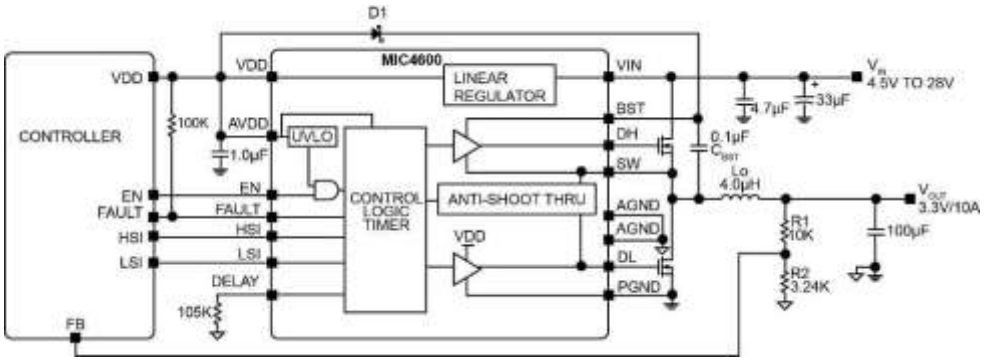

<< BACK

MIC4605

85V Half-Bridge MOSFET Driver, Adaptive Dead Time, Shoot-Thru Protection

Online Datasheet

Features:

- 5.5V to 16V gate drive supply voltage –
  - range
- Advanced adaptive-dead-time
- Intelligent shoot-through protection
- MIC4605-1: Dual TTL inputs
- MIC4605-2: Single PWM input
- Enable input for on/off control
- On-chip bootstrap diode
- Fast 35ns propagation times
- Drives 1000pF load with 20ns rise –
  - and fall times
- Low power consumption: 135µA quiescent current
- Separate high- and low-side under-voltage protection
- -40ºC to +125ºC junction temperature range

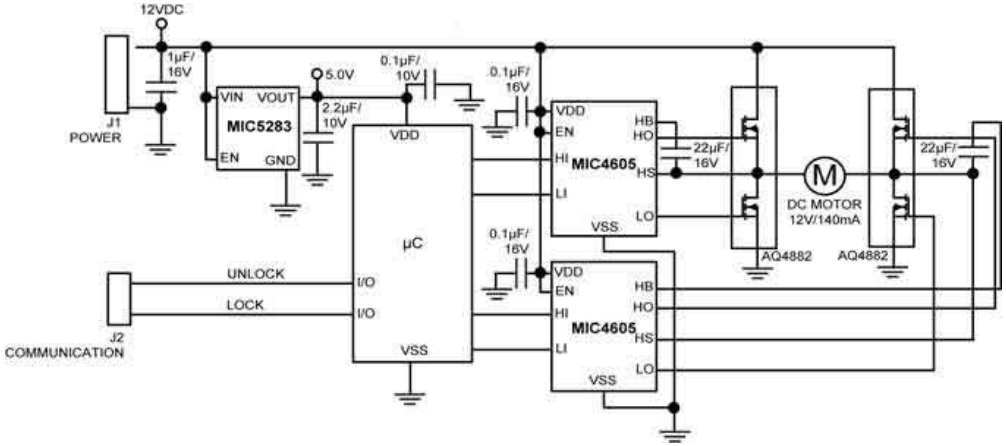

<< BACK

MIC4604

85V Half Bridge MOSFET Drivers with Programmable Gate Drive

Online Datasheet

Features:

- 5.5V to 16V gate drive supply voltage range
- Drives high-side and low-side N-Channel –
  - MOSFETs with independent inputs
- TTL input thresholds
- On chip bootstrap diode
- Fast 39ns propagation times
- Drives 1000pF load with 20ns rise and –
  - fall times
- Low power consumption
- Supplies under-voltage protection
- -40ºC to +125ºC junction temperature range

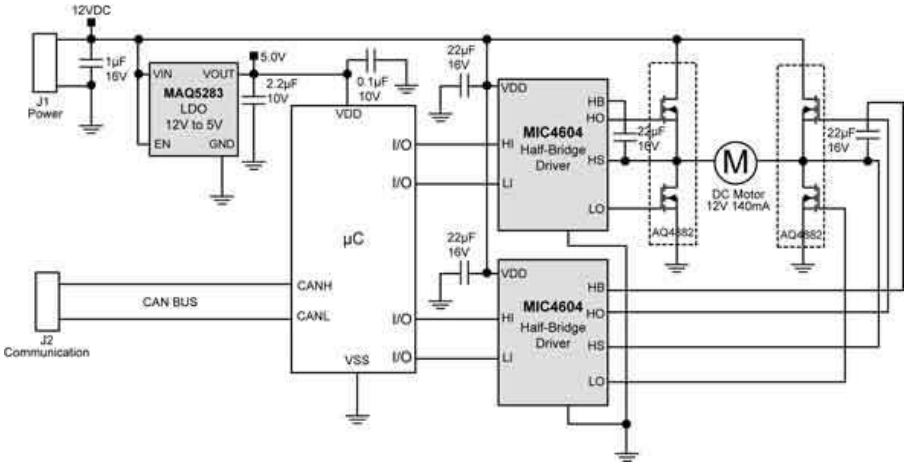

<< BACK

MIC4103/4

100V Half Bridge MOSFET Drivers 3/2A Sinking/Sourcing Current

Online Datasheet

Features:

- Asymmetrical, low impedance outputs drive –
  - 1000pF load with 10ns rise times and 6ns –
  - fall times
- Bootstrap supply max voltage to 118V DC
- Supply voltage up to 16V
- Drives high- and low-side N-Channel MOSFETs –
  - with independent inputs
- CMOS input thresholds (MIC4103)
- TTL input thresholds (MIC4104)
- On-chip bootstrap diode
- Fast 24ns propagation times
- Low power consumption
- Supply under-voltage protection
- Typical 2.5Ω pull up and 1.25Ω pull down output –
  - driver resistance
- -40ºC to +125ºC junction temperature range

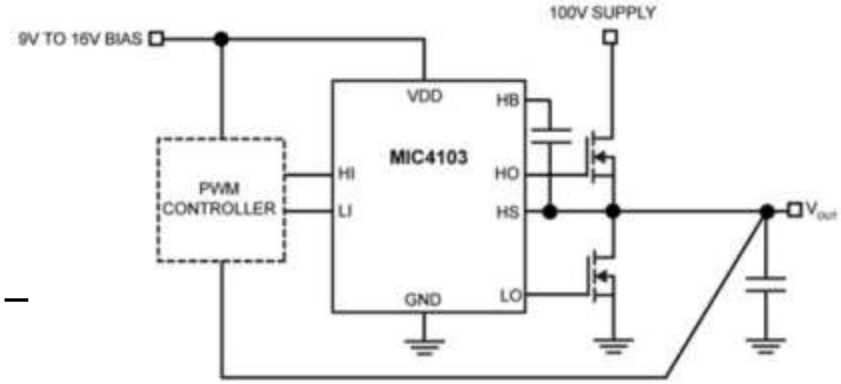

<< BACK

MIC4102

100V Half Bridge MOSFET Driver with Anti-Shoot-Through Protection

Online Datasheet

Features:

- Drives high- and low-side N-Channel MOSFETs – - with single input
- Adaptive anti-shoot-through protection
- Low side drive disable pin
- Bootstrap supply voltage to 118V DC
- Supply voltage up to 16V
- TTL input thresholds
- On-chip bootstrap diode
- Fast 30ns propagation times
- Drives 1000pF load with 10ns rise and fall times
- Low power consumption
- Supply under-voltage protection
- 2.5Ω pull up, 1.5Ω pull down output resistance
- Space saving SOIC-8L package
- -40ºC to +125ºC junction temperature range

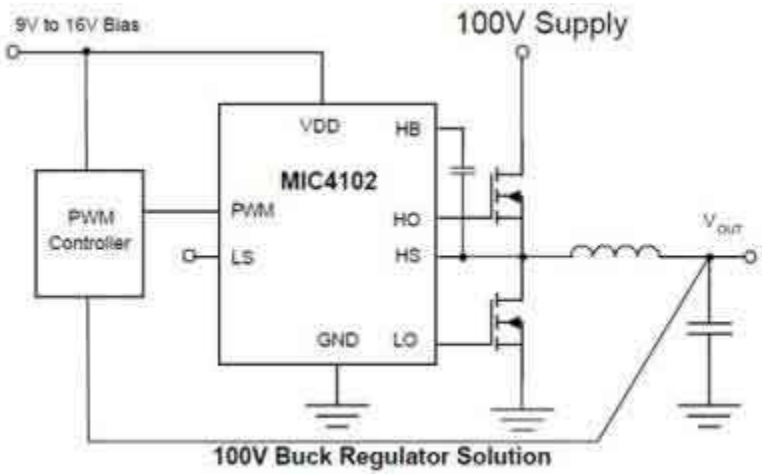

100V Buck Regulator Solution

<< BACK

MIC4100/1

100V Half Bridge MOSFET Drivers

Online Datasheet

Features:

- Bootstrap supply max voltage to 118V DC
- Supply voltage up to 16V
- Drives high- and low-side N-Channel MOSFETs –
  - with independent inputs
- CMOS input thresholds (MIC4100)
- TTL input thresholds (MIC4101)
- On-chip bootstrap diode
- Fast 30ns propagation times
- Drives 1000pF load with 10ns rise and fall times
- Low power consumption
- Supply under-voltage protection
- 3Ω pull up, 3Ω pull down output resistance
- Space saving SOIC-8L package
- -40ºC to +125ºC junction temperature range

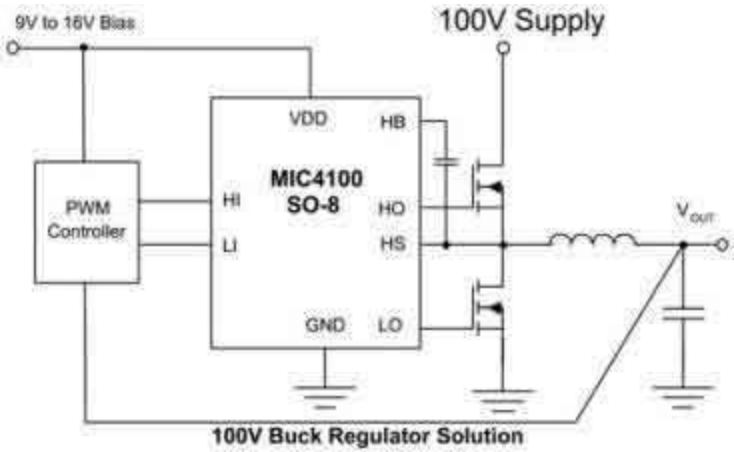

100V Buck Regulator Solution

<< BACK

MIC4606

85V Full-Bridge MOSFET Driver, Adaptive Dead Time, Shoot Thru Protection

Online Datasheet

Features:

- 5.5V to 16V gate drive supply voltage – - range
- Advanced adaptive-dead-time
- Intelligent shoot-through protection
- MIC4606-1: 4 Independent TTL inputs
- MIC4606-2: 2 PWM inputs
- Enable input for on/off control
- On-chip bootstrap diodes
- Fast 35ns propagation times
- Drives 1000pF load with 20ns rise and fall – times
- Low power consumption: 235µA quiescent current
- Separate high- and low-side under-voltage protection
- -40ºC to +125ºC junction temperature range

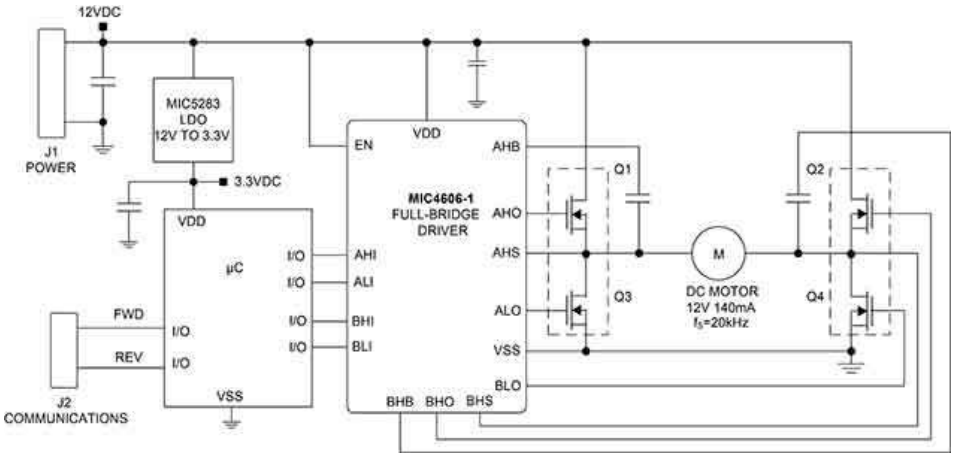

<< BACK

MIC4607

85V 3-Phase MOSFET Driver w/ Adaptive Dead-Time & Protection

Online Datasheet

Features:

- Gate driver supply voltage up to 16V
- Overcurrent protection
- Drives high-side and low-side N-Channel –
  - MOSFETs with independent inputs or with a –
  - single PWM signal
- TTL input thresholds
- On-chip bootstrap diodes
- Fast 35ns propagation times
- Shoot-through protection
- Drives 1000pF load with 20ns rise and fall times
- Low power consumption
- Supply under-voltage protection
- 28-pin 4mm x 5mm QFN package
- 28-pin TSSOP package
- -40ºC to +125ºC junction temperature range

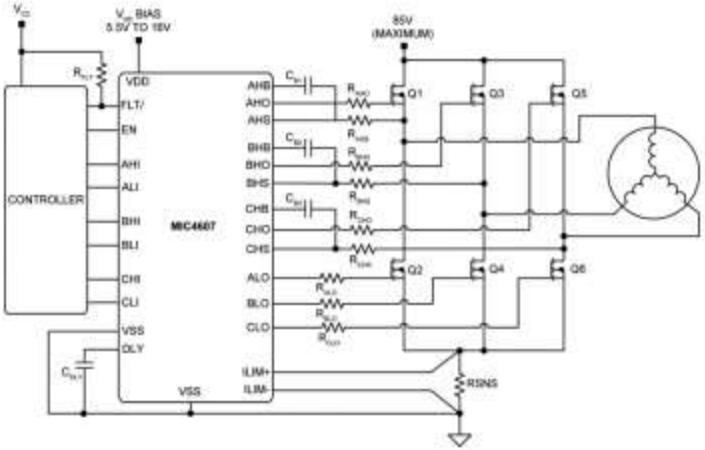

Three-Phase Motor Driver

<< BACK

MIC4608

600V Half-Bridge MOSFET or IGBT Driver

Online Datasheet

Features:

- Adjustable dead time circuitry
- Anti-shoot-through protection
- Internal LDO for single supply operation
- Input voltage range: 4.5V to 28V
- Fast propagation delay: 20ns
- Up to 1.5 MHz operation
- Low voltage logic level inputs for µC or FPGA – - driven power solutions
- Independent inputs for low and high side drivers
- 2Ω gate drive capable of driving 3000pF load – - with 15ns rise and fall times
- Low 450µA typical quiescent current
- -40ºC to +125ºC junction temperature range
- 14-SOIC

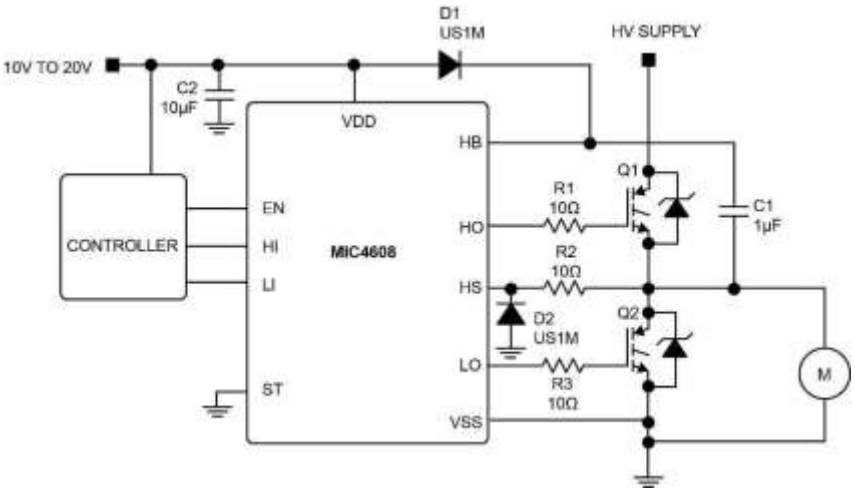

<< BACK

MIC4609

600V 3-Phase MOSFET Driver w/ Shoot Through Protection

Online Datasheet

Features:

- Gate drive supply voltage up to 20V
- Overcurrent protection with programmable –
  - restart delay
- 1A gate drivers
- Single (PWM) and dual (independent) inputs –
  - per phase
- Fault signal asserts on overcurrent and VDD –
  - UVLO
- TTL input thresholds
- 300ns typical input filtering time
- Shoot thru protection
- Low power consumption
- Supply under-voltage protection
- -40ºC to +125ºC junction temperature range

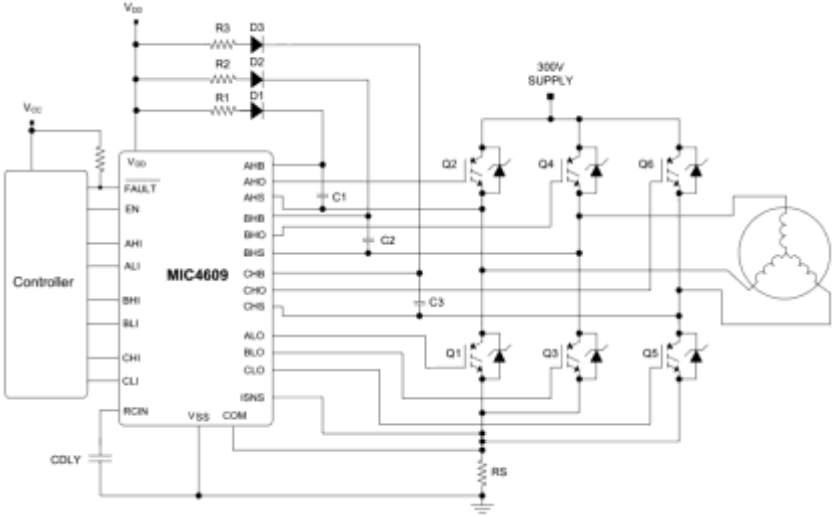

<< BACK

MIC22950

10A Integrated Switch Synch. Buck Regulator w/ Programmable Frequency

Online Datasheet

Features:

- 2.6V to 5.5V supply voltage
- Fully integrated MOSFET switches
- Adjustable output voltage option down to 0.7V
- Output load current up to 10A
- Full sequencing and tracking capability
- Power On Reset
- Efficiency >95% across a broad load range
- Operating frequency programmable: 400kHz to –
  - 2MHz
- Ultra-fast transient response
- 100% maximum duty cycle
- Micropower shutdown
- Thermal shutdown and current-limit protection
- Available in a 32-pin 5mm x 5mm MLF® package
- -40ºC to +125ºC junction temperature range

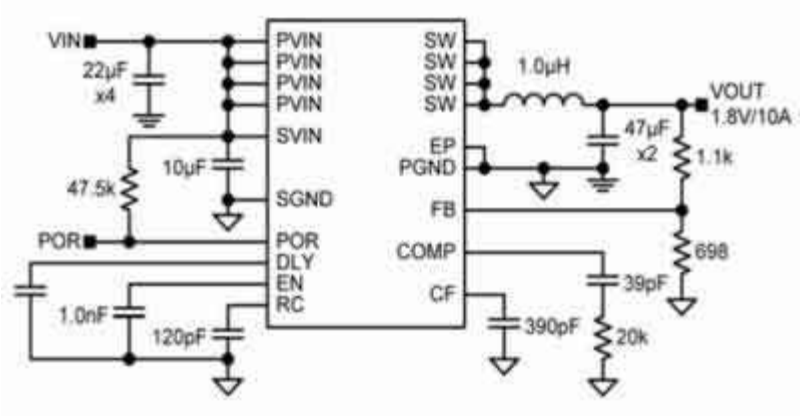

<< BACK

MIC22700

1MHz 7A Integrated Switch High Efficiency Synch. Buck Regulator

Online Datasheet

Features:

- Input voltage range: 2.6V to 5.5V
- Output voltage adjustable down to 0.7V
- Output current up to 7A
- Full sequencing and tracking capability
- Power on Reset/Power Good
- Efficiency >95% across a broad load range
- Easy RC compensation
- 100% maximum duty cycle
- Fully integrated MOSFET switches
- Micropower shutdown
- Thermal shutdown and current limit protection
- 24-pin 4mm x 4mm MLF®
- -40ºC to +125ºC junction temperature range

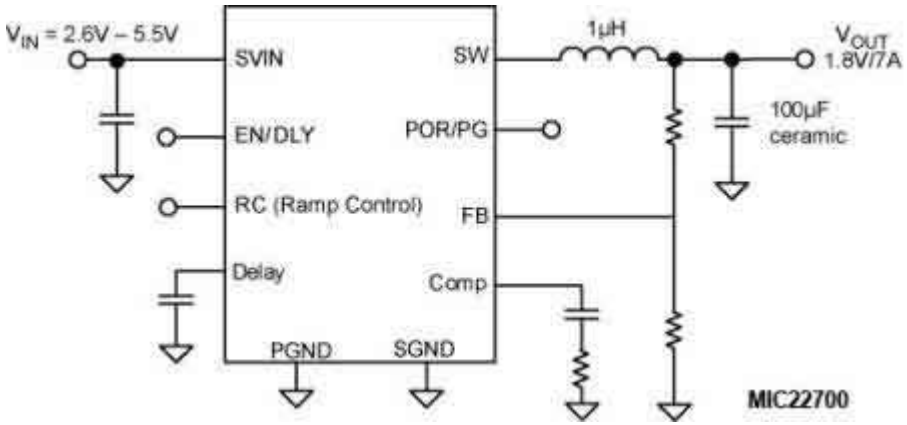

<< BACK

MIC22705

1MHz 7A Integrated Switch High-Efficiency Synch. Buck Regulator

Online Datasheet

Features:

- Input voltage range: 2.9V to 5.5V
- Output load current up to 7A
- Output voltage adjustable down to 0.7V
- Safe start-up into a pre-biased load
- Full sequencing and tracking capability
- Power Good output
- Efficiency >95% across a broad load range
- Ultra-fast transient response
- Easy RC compensation
- 100% maximum duty cycle
- Fully-integrated MOSFET switches
- Thermal-shutdown and current-limit protection
- 24-pin 4mm x 4mm MLF®
- -40ºC to +125ºC junction temperature range

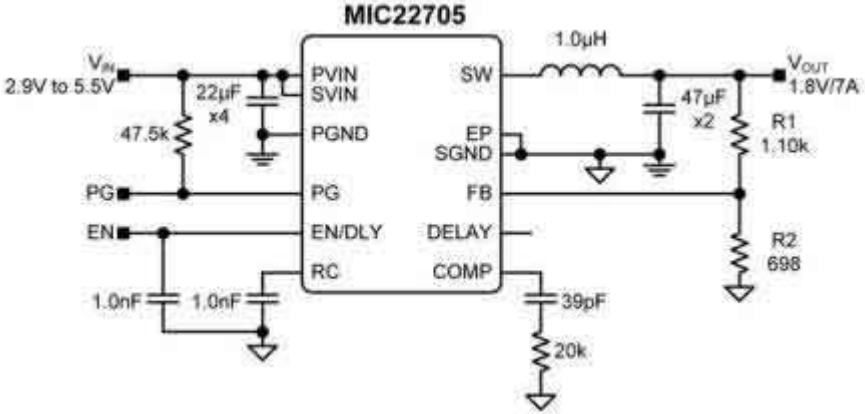

<< BACK

MIC22600

1MHz 6A Integrated Switch Synch. Buck Regulator

Online Datasheet

Features:

- Input voltage range: 2.6V to 5.5V
- Output voltage adjustable down to 0.7V
- Output current up to 6A
- Full sequencing and tracking ability
- Power on Reset/Power Good
- Efficiency >90% across a broad load range
- Ultra fast transient response, easy RC -
  - compensation
- 100% maximum duty cycle
- Fully integrated MOSFET switches
- Micropower shutdown
- Thermal-shutdown and current-limit protection
- 24-pin 4mm x 4mm MLF®
- 24-pin ePad TSSOP
- -40ºC to +125ºC junction temperature range

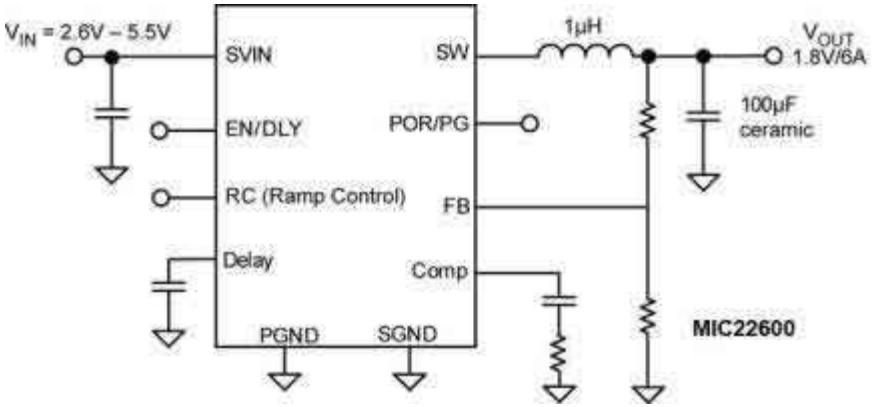

<< BACK

MIC22601

4MHz 6A Integrated Switch Synch. Buck Regulator

Online Datasheet

Features:

- Input voltage range: 2.6V to 5.5V
- 4MHz PWM frequency
- Output current to 6A
- Small Passive components: 0.22µH and 22µF
- Full sequence and tracking ability
- Power On Reset/Power Good
- Adjustable output voltage option down to 0.7V
- Ultra fast transient response:
  - Easy RC compensation
- 100% maximum duty cycle
- Fully integrated MOSFET switches
- Thermal shutdown and current limit protection
- 24-pin 4mmx4mm MLF® package
- -40ºC to +125ºC junction temperature range

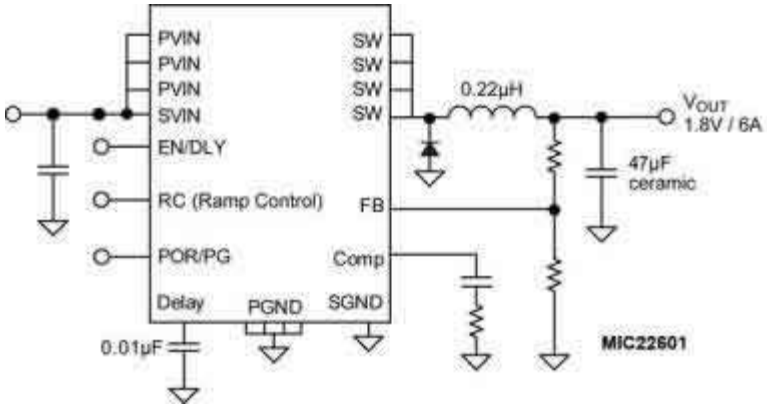

<< BACK

MIC22602

1MHz 6A Integrated Switch High Efficiency Synch. Buck Regulator

Online Datasheet

Features:

- Input voltage range: 2.6V to 5.5V
- Output voltage adjustable down to 0.7V
- Output load current up to 6A
- Full sequencing and tracking capability
- Power on Reset/Power Good output
- Efficiency >95% across a broad load range
- Ultra fast transient response-Easy RC compensation
- 100% maximum duty cycle
- Fully integrated MOSFET switches
- Hiccup mode current limiting
- Micropower shutdown
- Thermal shutdown and current limit protection
- 24-pin 4mm x 4mm MLF®
- -40ºC to +125ºC junction temperature range

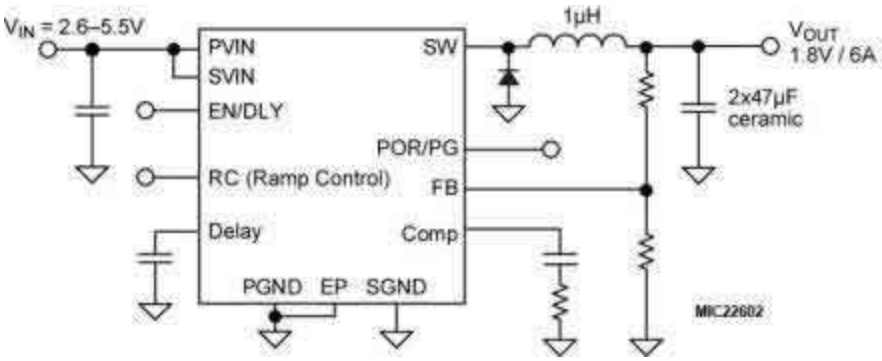

<< BACK

MIC23603

4MHz PWM 6A Buck Regulator with HyperLight Load®

Online Datasheet

Features:

- Input voltage: 2.7V to 5.5V
- 6A output current
- Up to 93% efficiency and 81% at 1mA
- 24µA typical quiescent current
- 4MHz PWM operation in continuous mode
- Ultra-fast transient response
- Power Good
- Programmable soft-start
- Low voltage output ripple:
  - 14mVpp ripple in HyperLight Load® mode
  - 5mV output voltage ripple in full PWM mode
- Fully integrated MOSFET switches
- 0.01µA shutdown current
- Thermal shutdown and current limit protection
- Output voltage as low as 0.65V
- 20-pin 4mm x 5mm DFN

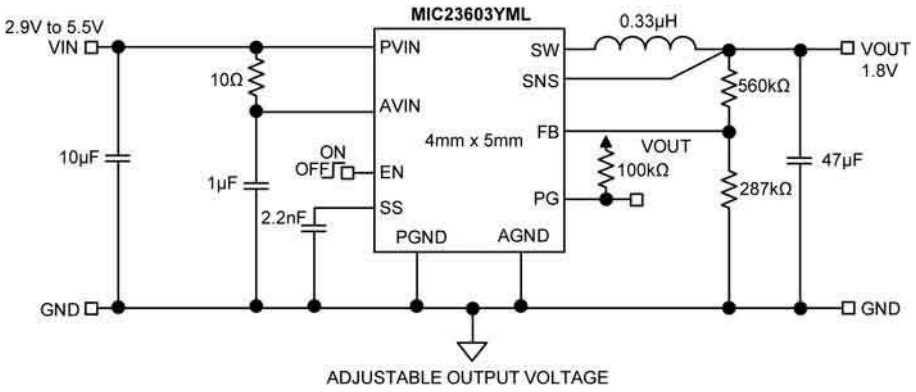

<< BACK

MIC4950

Hyper Speed Control™ 5A Buck Regulator

Online Datasheet

Features:

- Input voltage: 2.7V to 5.5V
- 5A output current
- Up to 95% efficiency
- Up to 3.3MHz operation
- Safe start-up into a pre-biased output
- Power Good output
- Ultra-fast transient response
- Low output voltage ripple
- Low RDS(ON) integrated MOSFET switches
- 0.01µA shutdown current
- Thermal shutdown and current limit protection
- Output voltage as low as 0.7V
- 8-pin SOIC and 3mm × 4mm DFN-10L
- -40ºC to +125ºC junction temperature range

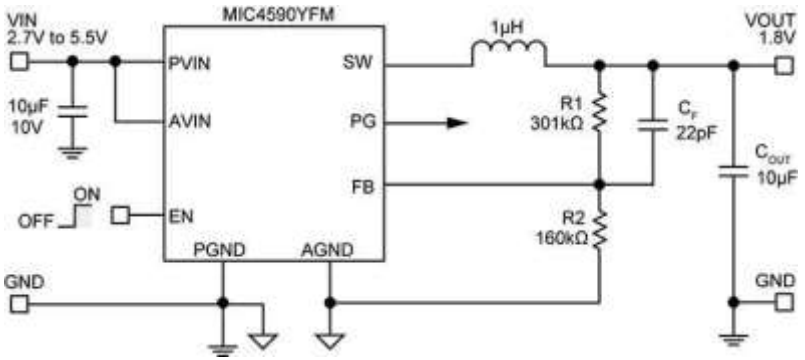

<< BACK

MIC22400

4A Synch. Buck Regulator with Programmable Frequency

Online Datasheet

Features:

- Input voltage range: 2.6V to 5.5V
- Output voltage adjustable down to 0.7V
- Output current up to 4A
- Full sequencing and tracking ability
- Power-On-Reset (POR)
- Efficiency > 90% across a broad load range
- Programmable frequency 300kHz to 4MHz
- Easy Ramp Control™ (RC) compensation
- 100% maximum duty cycle
- Fully-integrated MOSFET switches
- Thermal-shutdown and current limit protection
- 20-pin 3mm x 4mm MLF®
- 20-pin ePad TSSOP
- -40ºC to +125ºC junction temperature range

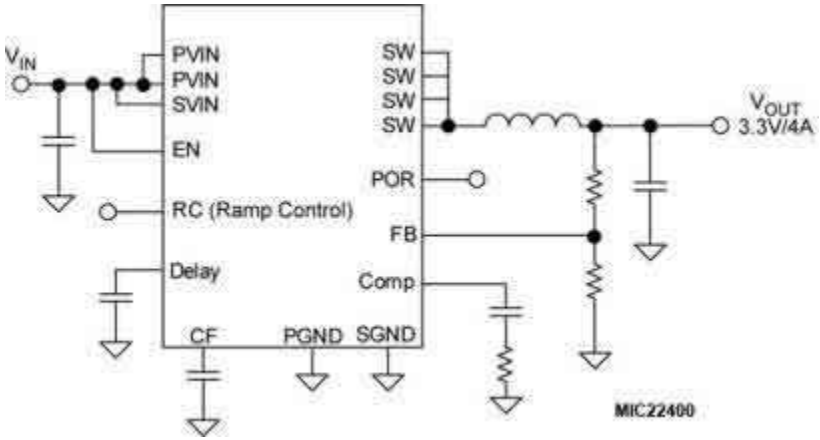

<< BACK

MIC22405

4A High-Efficiency Synch. Buck Regulator w/ Programmable Frequency

Online Datasheet

Features:

- Input voltage range: 2.9V to 5.5V
- Ultra-fast transient response
- Output load current up to 4A
- Safe start-up into a pre-biased output
- Full sequencing and tracking capability
- Efficiency > 95% across a broad load range
- Programmable frequency 300kHz to 4MHz
- Easy RC compensation
- 100% maximum duty cycle
- Fully-integrated MOSFET switches
- Thermal shutdown and current-limit protection
- 20-pin 3mm x 4mm MLF®
- -40ºC to +125ºC junction temperature range
- Output voltage adjustable down to 0.7V

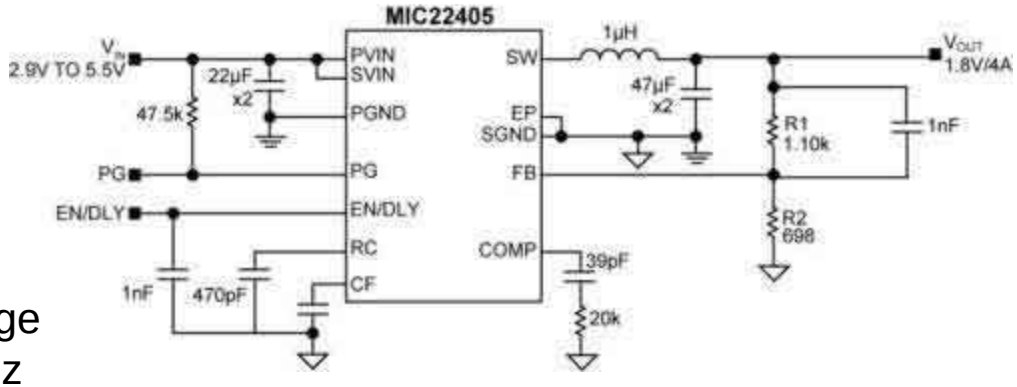

<< BACK

MIC2207

2MHz 3A Buck Regulator

Online Datasheet

Features:

- 2.7V to 5.5V supply voltage
- 2MHz PWM mode
- Output current to 3A
- >94% efficiency
- 100% maximum duty cycle
- Adjustable output voltage option –
  - down to 1V
- Ultra-fast transient response
- Ultra-small external components stable with a –
  - 1µH inductor and a 4.7µF output capacitor
- Fully integrated 3A MOSFET switch
- Micropower shutdown
- Thermal shutdown and current limit protection
- 12-pin 3mm x 3mm MLF® package
- -40ºC to +125ºC junction temperature range

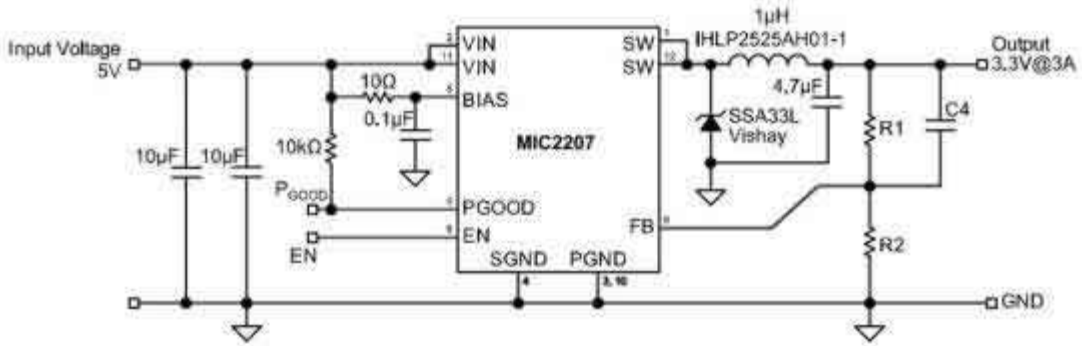

<< BACK

MIC4930

Hyper Speed Control™ 3A Buck Regulator

Online Datasheet

Features:

- Input voltage: 2.7V to 5.5V
- 3A output current
- Up to 95% efficiency
- Up to 3.3MHz operation
- Safe start-up into a pre-biased output
- Power Good output
- Ultra-fast transient response
- Low output voltage ripple
- Low RDS(ON) integrated MOSFET switches
- 0.01µA shutdown current
- Thermal shutdown and current limit protection
- Output voltage as low as 0.7V
- 3mm × 4mm DFN-10L
- -40ºC to +125ºC junction temperature range

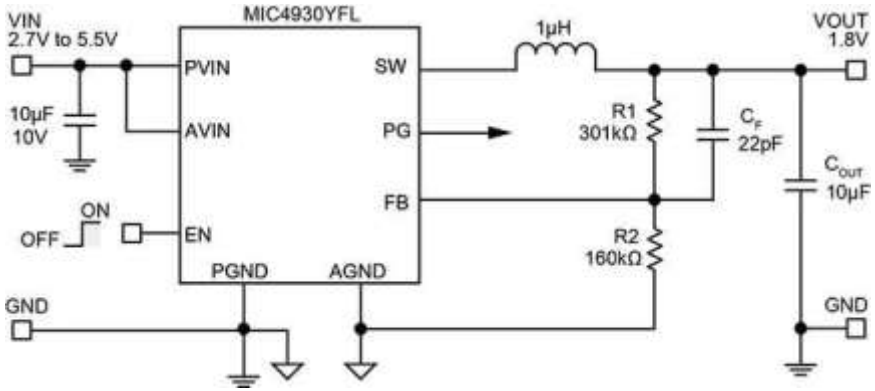

<< BACK

MIC23303

4MHz PWM 3A Buck Regulator with HyperLight Load® & Power Good

Online Datasheet

Features:

- Input voltage: 2.7V to 5.5V
- Output voltage: down to 0.65V
- Up to 3A output current
- Up to 93% peak efficiency
- 80% typical efficiency at 1mA
- 24µA typical quiescent current
- 4MHz PWM operation in continuous mode
- 35mVpp ripple in HyperLight Load® mode
- 5mV output voltage ripple in full PWM mode
- Fully integrated MOSFET switches
- 0.01µA shutdown current
- Thermal-shutdown and current-limit protection
- 12-pin 3mm x 3mm DFN
- -40ºC to +125ºC junction temperature range

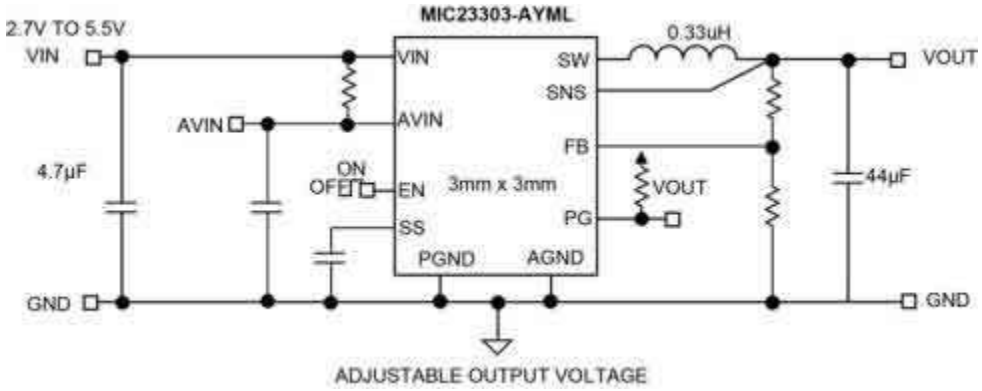

<< BACK

MIC38300

HELDO® 3A High Efficiency Low Dropout Regulator

Online Datasheet

Features:

- 3A peak output current
- 2.2A continuous operating current
- Input voltage range: 3.0V to 5.5V
- Adjustable output voltage down to 1.0V
- Output noise less than 5mV
- Ultra fast transient performance
- Unique switcher plus LDO architecture
- Fully integrated MOSFET switches
- Micro-power shutdown
- Easy upgrade from LDO as power dissipation –
  - becomes an issue
- Thermal shutdown and current limit protection
- 4mm x 6mm x 0.9mm MLF® package

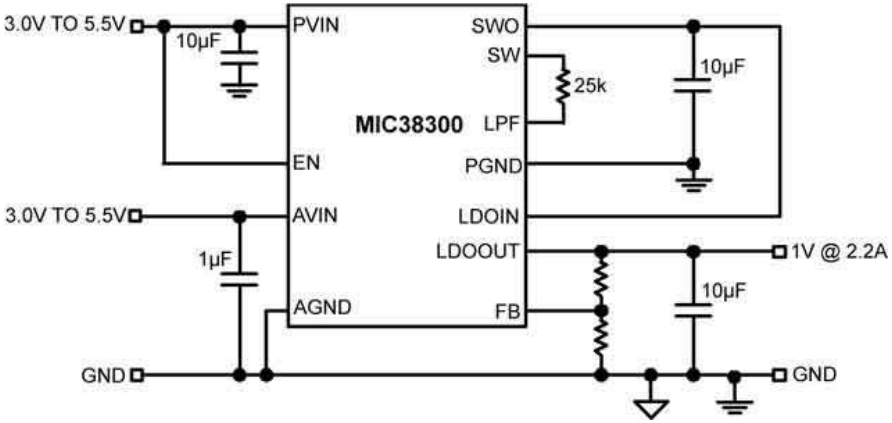

<< BACK

MIC4722

2.7MHz 3A PWM Buck

Online Datasheet

Features:

- 2.7V to 5.5V supply voltage
- 2.7MHz PWM mode
- Output current to 3A
- >92% efficiency
- Adjustable output voltage option down to 1V
- 100% maximum duty cycle
- Ultra-fast transient response
- Ultra-small external components Stable with a –
  - 0.47µH inductor and a 4.7µF output capacitor
- Fully integrated 3A MOSFET switch
- Micropower shutdown
- Thermal shutdown and current limit protection
- Pb-free 12-pin 3mm x 3mm MLF® package
- -40ºC to +125ºC junction temperature range

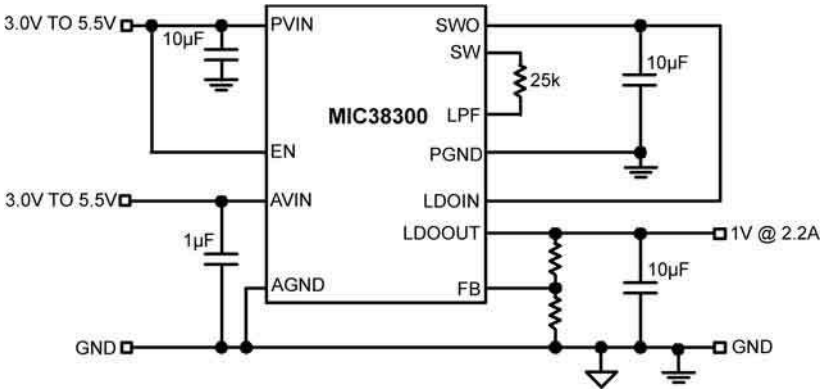

<< BACK

MIC4723

3A 2MHz Integrated Switch Buck Regulator

Online Datasheet

Features:

- 2.7V to 5.5V supply voltage
- 2.0MHz PWM mode
- Output current to 2A
- Up to 94% efficiency
- 100% maximum duty cycle
- Adjustable output voltage option down –
  - to 1V
- Ultra-fast transient response
- Ultra-small external components Stable –
  - with a 1µH inductor and a 4.7µF output capacitor
- Fully integrated 2A MOSFET switch
- Thermal shutdown and current limit protection
- Pb-free 12-pin 3mm x 3mm MLF® package
- -40ºC to +125ºC junction temperature range
- Pb-free 10-pin ePad MSOP package

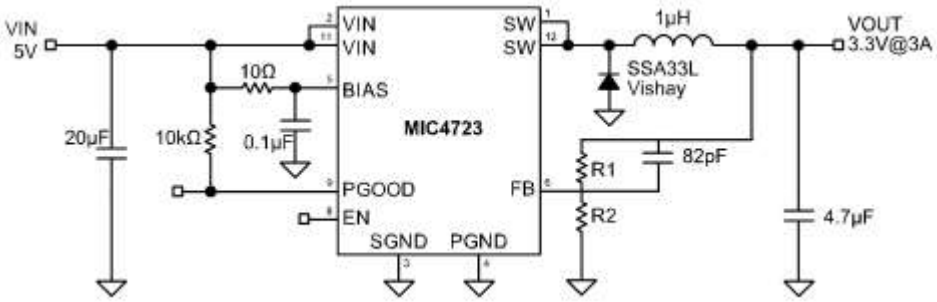

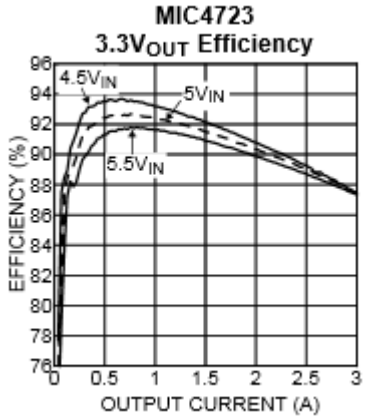

<< BACK

MIC4720

2.0MHz 2A Buck Regulator

Online Datasheet

Features:

- 2.7V to 5.5V supply voltage
- 2.0MHz PWM mode
- Output current to 2A
- Up to 94% efficiency
- 100% maximum duty cycle
- Adjustable output voltage option –
  - down to 1V
- Ultra-fast transient response
- Ultra-small external components –
  - Stable with a 1µH inductor and –
  - a 4.7µF output capacitor
- Fully integrated 2A MOSFET switch
- Thermal shutdown and current limit protection
- Pb-free 12-pin 3mm x 3mm MLF® package
- -40ºC to +125ºC junction temperature range
- Pb-free 10-pin ePad MSOP package

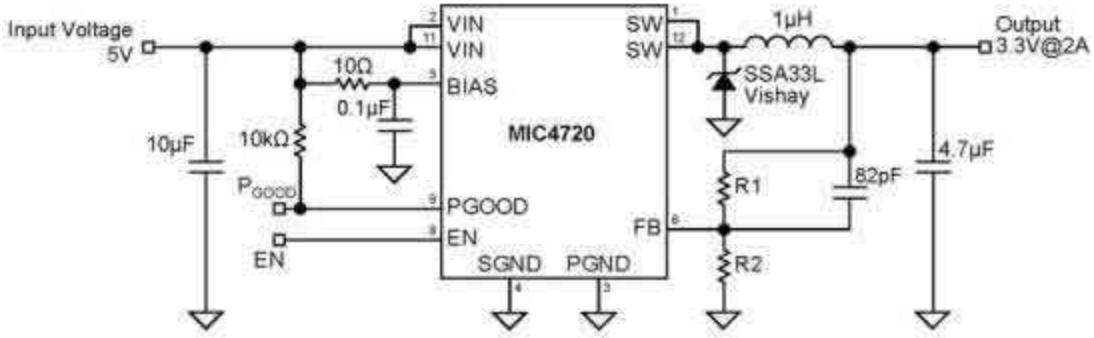

<< BACK

MIC2267

Input Current Limiting Synchronous Buck Regulator

Online Datasheet

Features:

- Input voltage range: 3.0V to 5.5V
- Micropower shutdown
- Fast transient response
- Output voltage adjustable down to 1.0V
- Up to 96% efficiency at 500mA output
- Efficiency <90% across a broad load range
- Adjustable frequency from 400kHz to 1.5MHz
- Adjustable input current limiting 100mA –
  - to over 1A
- 100% maximum duty cycle
- Fully integrated MOSFET switches
- Thermal shutdown and output current limit protection
- 12-pin 3mm x 3mm MLF®
- Junction temperature range: -40ºC to +125ºC

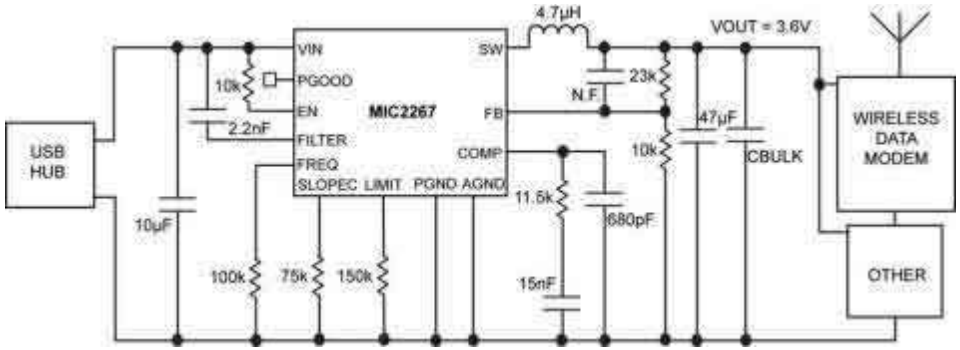

<< BACK

MIC22200

2A Synch. Buck Regulator w/ Programmable Frequency

Online Datasheet

Features:

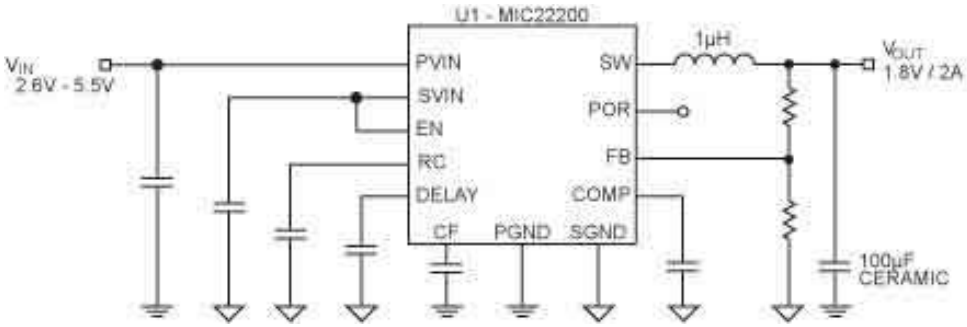

- Input voltage range: 2.6V to 5.5V
- Output current to 2A
- Full sequencing and tracking capability
- Easy RC compensation
- Power On Reset (POR) output
- Adjustable output voltage option down to –
  - 0.7V
- Efficiency >90% across a broad load range
- Operating frequency: Programmable from 800 kHz up to 4MHz
- Ultra fast transient response
- 100% maximum duty cycle
- Fully integrated MOSFET switches
- Thermal shutdown and current limit protection
- Available in Pb-free 3mm x 3mm 12-pin MLF® package
- -40ºC to +125ºC junction temperature range

<< BACK

MIC22205

2A High-Efficiency Synch. Buck Regulator w/ Programmable Frequency

Online Datasheet

Features:

- Input voltage range: 2.9V to 5.5V
- Output voltage adjustable down to 0.7V
- Output load current up to 2A
- Safe start-up into a pre-biased output
- Full sequencing and tracking capability
- Power Good (PG) output
- Efficiency >95% across a broad load range
- Programmable frequency 300kHz to 4MHz
- Easy RC compensation
- 100% maximum duty cycle
- Fully-integrated MOSFET switches
- Thermal-shutdown and current-limit protection
- 12-pin 3mm x 3mm MLF®
- -40ºC to +125ºC junction temperature range

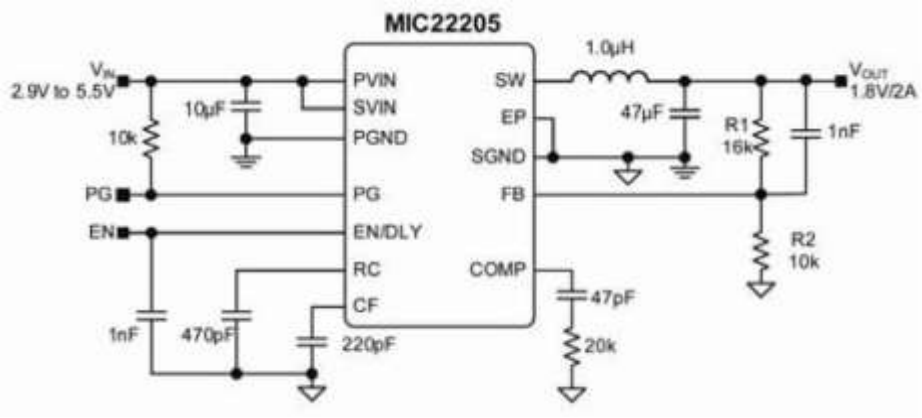

<< BACK

MIC23150

4MHz PWM 2.0A Buck Regulator w/ HyperLight Load®

Online Datasheet

Features:

- Input voltage: 2.7V to 5.5V
- 2.0A output current
- Up to 93% peak efficiency
- 87% typical efficiency at 1mA
- 23µA typical quiescent current
- 4MHz PWM operation in continuous – - mode
- Low ripple output voltage
- 14mVpp ripple in HyperLight Load® - - mode
- 5mV output voltage ripple in full PWM mode
- Fully integrated MOSFET switches
- 0.01µA shutdown current
- Output Voltage as low as 0.95V
- 8-pin 2mm x 2mm Thin MLF®
- -40ºC to +125ºC junction temperature range

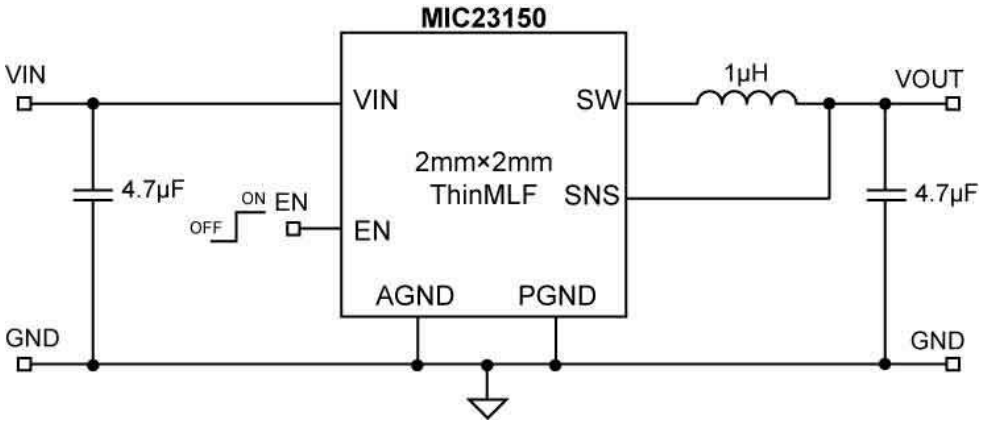

<< BACK

MIC23155

3MHz PWM 2A Buck Regulator w/ HyperLight Load® & Power Good

Online Datasheet

Features:

- Input voltage: 2.7V to 5.5V
- Up to 2A output current
- Up to 94% peak efficiency
- 85% typical efficiency at 1mA
- Programmable soft-start
- 22µA typical quiescent current
- Output voltage: fixed or adjustable –
  - (down to 0.7V)
- 3MHz PWM operation in continuous –
  - conduction mode
- Active output discharge when disabled
- Fully integrated MOSFET switches
- 0.01µA shutdown current
- Thermal shutdown and current limit protection
- 10-pin 2.5mm x 2.5mm Thin MLF®
- -40ºC to +125ºC junction temperature range

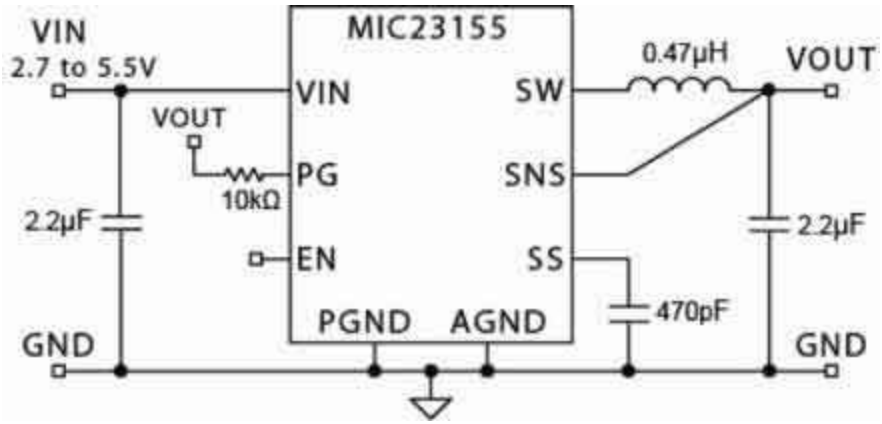

<< BACK

MIC23201

2MHz PWM 2A Buck Regulator w/ Hyper Speed Control™

Online Datasheet

Features:

- Input voltage: 2.7V to 5.5V
- 2A output current
- Up to 90% peak efficiency
- Programmable Soft-Start
- Power Good Indicator
- 2MHz switching frequency
- Safe for pre-biased output
- Ultra fast transient response
- Low voltage output ripple, 16mV –
  - at full load
- Fully integrated MOSFET switches
- 0.01µA shutdown current
- Output Voltage as low as 0.95V
- 10-pin 3mm x 3mm MLF®
- -40ºC to +125ºC junction temperature range

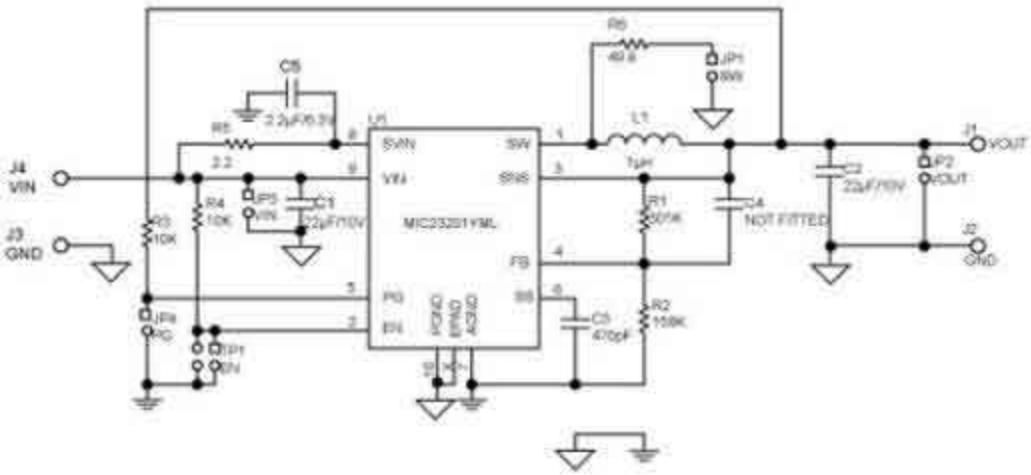

<< BACK

MIC4721

1.5A 2MHz Integrated Switch Buck Regulator

Online Datasheet

Features:

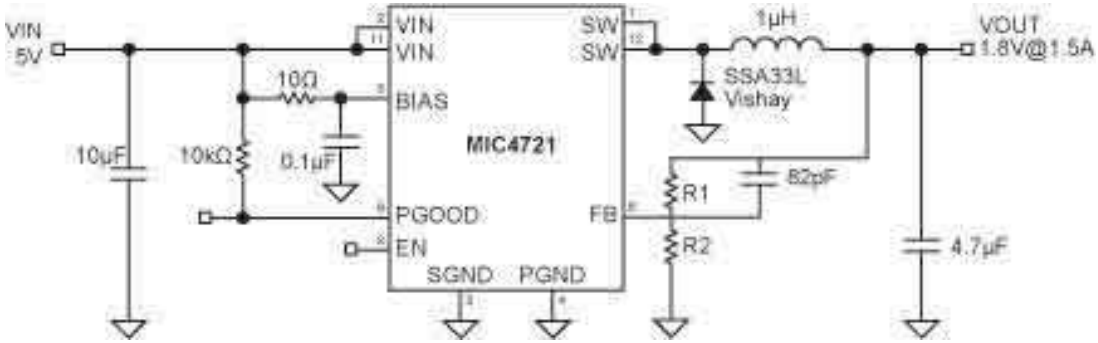

- 2.7V to 5.5V supply voltage
- 2MHz PWM mode
- Output current to 1.5A
- Up to 94% efficiency
- 100% maximum duty cycle
- Adjustable output voltage option –
  - down to 1V
- Ultra-fast transient response
- Stable with a 1µH inductor and a 4.7µF output capacitor
- Fully integrated 1.5A MOSFET switch
- Micropower shutdown
- Power Good pin
- Thermal shutdown and current limit protection
- 10-pin MSOP package
- -40ºC to +125ºC junction temperature range

<< BACK

MIC23156

1.5A 3MHz Synch. Buck w/ HyperLight Load® & Dynamic Voltage Scaling

Online Datasheet

Features:

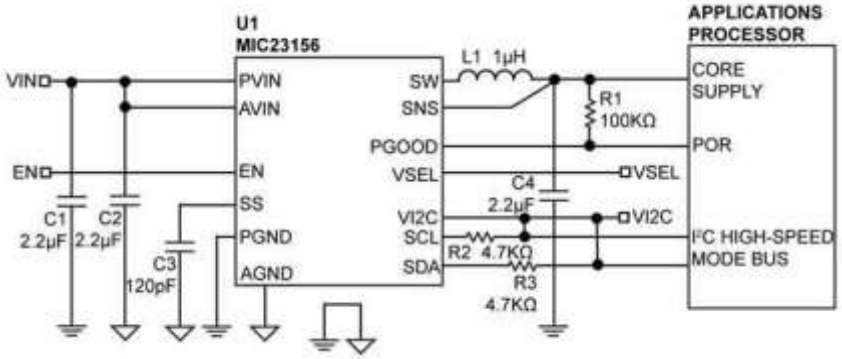

- Input voltage: 2.7V to 5.5V
- Up to 1.5A output current
- Safe startup in to pre-biased output
- Up to 93% peak efficiency
- Fast pin–selectable output voltage
- 1MHz I2C-controlled adjustable output: -
  - VOUT = 0.7 to 2.4V in 10mV steps
- High output voltage accuracy (±1.5% over temperature)
- Programmable soft-start using external capacitor
- Ultra-low quiescent current of 30µA when not switching
- Thermal-shutdown and current-limit protection
- Stable with 1µH output inductor and 2.2µF ceramic capacitor
- Junction temperature range of -40ºC to +125ºC

<< BACK

MIC38150

HELDO® 1.5A High Efficiency Low Dropout Regulator

Online Datasheet

Features:

- Output current up to 1.5A
- Input voltage range: 3.0V to 5.5V
- Adjustable output voltage down to 1.0V
- Output noise less than 5mV
- Ultra fast transient performance
- Unique switcher plus LDO architecture
- Fully integrated MOSFET switches
- Micro-power shutdown
- Easy upgrade from LDO as power –
  - dissipation becomes an issue
- Thermal shutdown and current limit protection
- 4mm x 6mm x 0.9mm MLF® package

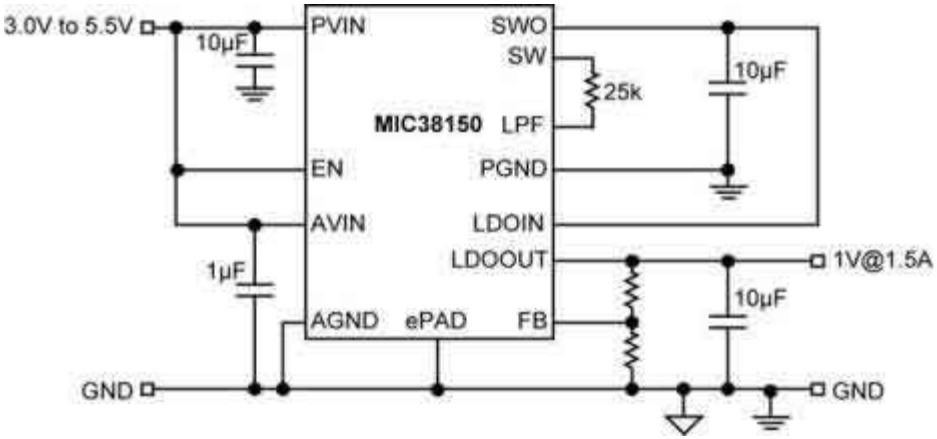

<< BACK

MIC2202

High Efficiency 1µF Stable 2MHz Synch. Buck Converter

Online Datasheet

Features:

- Input voltage range: 2.3V to 5.5V
- Output down to 0.5V @ 600mA
- 2MHz PWM operation
- Stable with 1µF ceramic output capcitor.
- Ultra-fast transient response (up to 500kHz – - GBW)
- All ceramic capacitors
- >95% efficiency
- Fully integrated MOSFET switches
- Easily synchronized to external clock
- SYNCLOCK feature to daisy chain multiple 2202s
- Requires only 4 external components
- 1% line and load regulation
- 10-pin MSOP and 3mm x 3mm MLF®-10L package options
- -40ºC to +125ºC junction temperature range

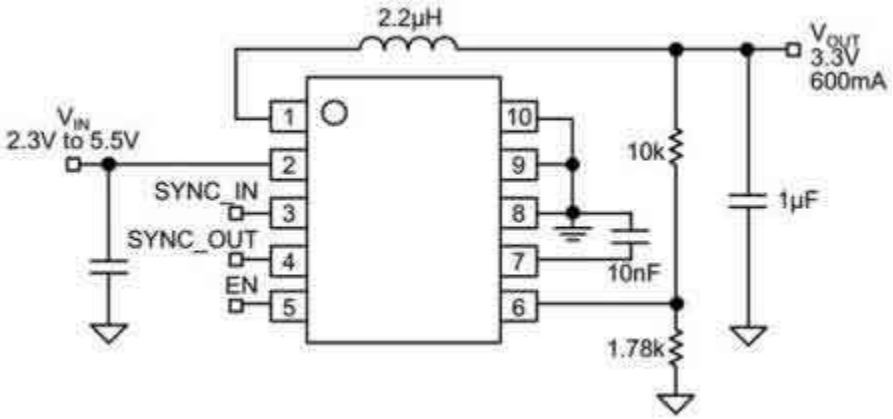

<< BACK

MIC2205

2MHz PWM Synch. Buck Regulator w/ LDO Standby Mode

Online Datasheet

Features:

- 2.7V to 5.5V supply voltage
- Light load LowQ® LDO mode
- 18µA quiescent current
- Low noise, 75mVrms
- 2MHz PWM mode
- Output current to 600mA
- >95% efficiency
- 100% maximum duty cycle
- Adjustable output voltage option down to 1V
- Fixed output voltage option available
- Ultra-fast transient response
- Stable with 1µF ceramic output capacitor
- Fully integrated MOSFET switches
- 3mm x 3mm MLF®-10L package
- -40ºC to +125ºC junction temperature range

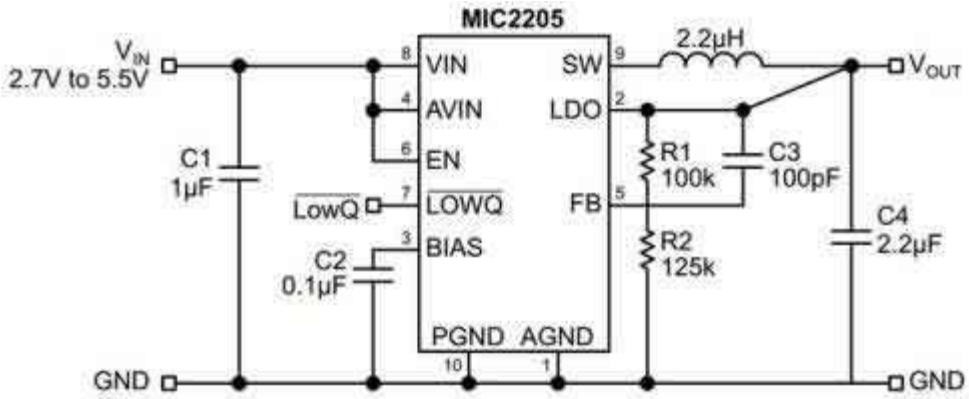

<< BACK

MIC2206

2MHz PWM Synch. Buck Regulator w/ LowQ® Mode & Voltage Scaling

Online Datasheet

Features:

- 2.7V to 5.5V supply voltage
- Light load LowQ® LDO mode:
  - 18µA quiescent current
  - Low noise, 75µVrms
- 2MHz PWM mode
- Output current to 600mA:
  - >95% efficiency
  - 100% maximum duty cycle
- Output Voltage Scaling (1V output in LowQ® Mode)
- Stable with 1mF ceramic output capacitor
- Fully integrated MOSFET switches
- Thermal shutdown and current limit protection
- 3mm x 3mm MLF®-10L package
- -40ºC to +125ºC junction temperature range

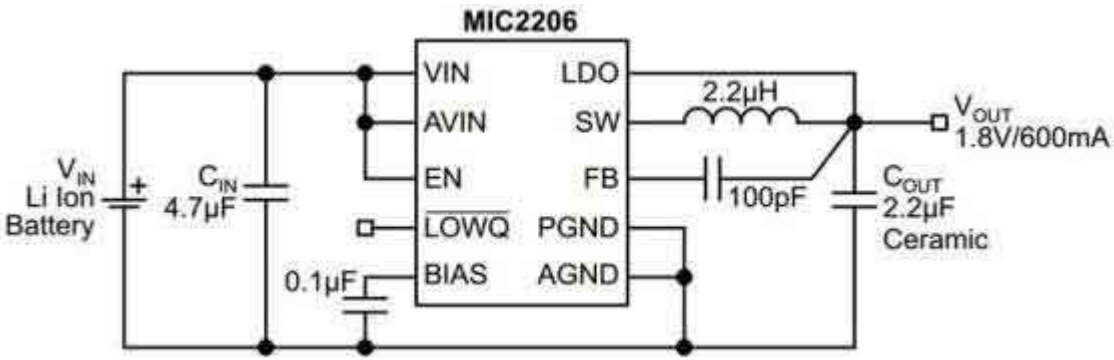

<< BACK

MIC2285A

8MHz PWM Synchronous Buck Regulator with LDO Standby Mode

Online Datasheet

Features:

- Light load LowQ® LDO mode:
  - 20 µA quiescent current
  - Low noise, 75 µVrms
- 8MHz PWM mode:
  - Output current to 600mA
  - >90% efficiency
  - 100% maximum duty cycle
- Adjustable output voltage option –
  - down to 1V:
    - Fixed output voltage options available
- Requires only a 0.47µH inductor
- Enables sub 0.55mm profile solution
- Fully integrated MOSFET switches
- Thermal shutdown and current limit protection
- 10-pin 2mm x 2mm x 0.55mm MLF® package
- -40ºC to +125ºC junction temperature range

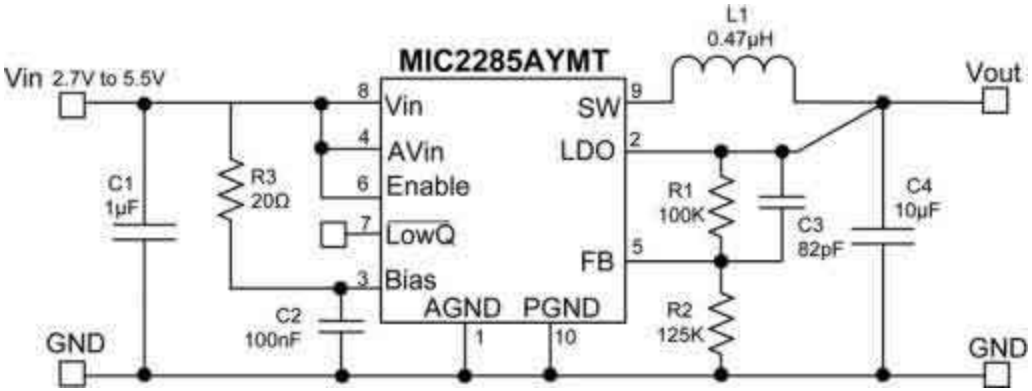

<< BACK

MIC23050

4MHz PWM Buck Regulator with HyperLight Load®

Online Datasheet

Features:

- Input voltage range: 2.7V to 5.5V
- 600mA output current
- Fixed output voltage from 0.72V to 3.3V
- Ultra fast transient response
- 20µA typical quiescent current
- 4MHz in PWM in constant current mode
- 0.47µH to 2.2µH inductor
- Low voltage output ripple:
  - 25mVpp in HyperLight Load® mode
  - 3mV output voltage ripple in full PWM mode
- >93% efficiency
- ~89% at 1mA
- Available in 8-pin 2mm x 2mm MLF®
- -40ºC to +125ºC junction temperature range

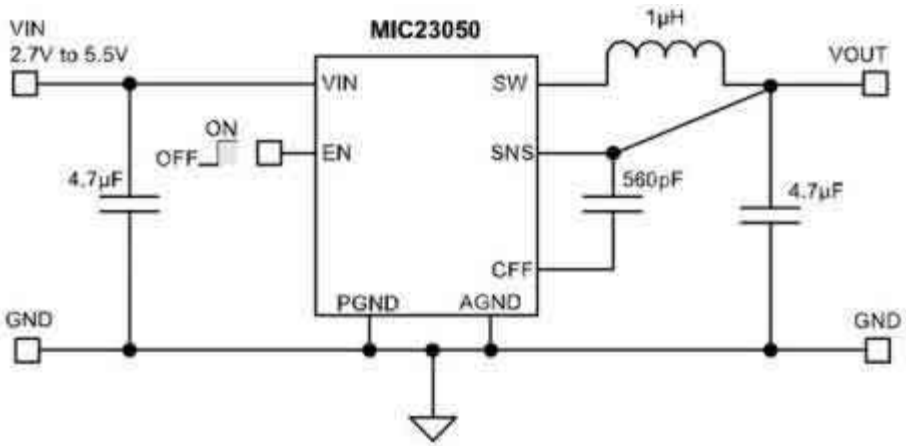

<< BACK

MIC23051

4MHz PWM Buck Regulator with HyperLight Load® & Voltage Scaling

Online Datasheet

Features:

- Input voltage range: 2.7V to 5.5V
- 600mA output current
- Fixed output voltage from 0.72V to 3.3V
- Output voltage scaling option
- 20µA typical quiescent current
- 4MHz in CCM PWM operation in normal mode
- 0.47µH to 2.2µH inductor
- Low voltage output ripple
- 25mVpp in HyperLight Load® mode
- 3mV output voltage ripple in full PWM mode
- >93% efficiency
- ~85% at 1mA
- Available in 8-pin 2mm x 2mm MLF®
- -40ºC to +125ºC junction temperature range

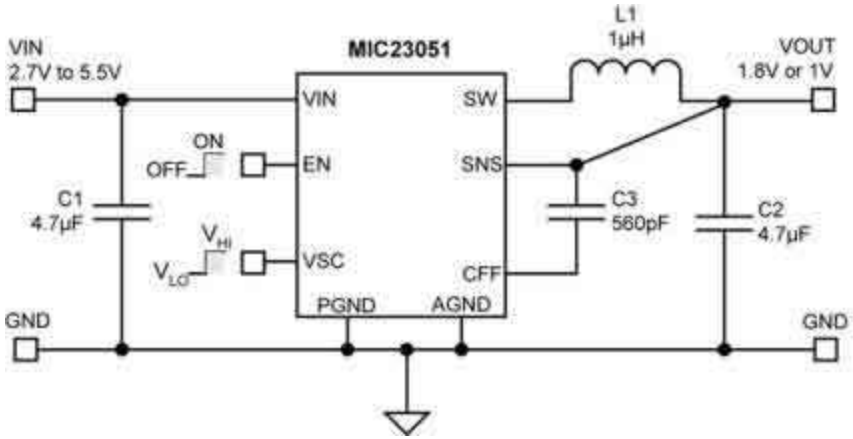

<< BACK

MIC2245

4MHz PWM Synch. Buck Regulator w/ LDO Standby Mode

Online Datasheet

Features:

- 2.7V to 5.5V supply/input voltage
- Light load LowQ® LDO mode
- 20µA quiescent current
- Low noise, 75µVrms
- 4MHz PWM mode
- Output current to 500mA
- >92% efficiency
- 100% maximum duty cycle
- Adjustable output voltage option down to 1V
- Fixed output voltage options available
- Uses a tiny 1µH inductor
- Fully integrated MOSFET switches
- Thermal shutdown and current limit protection
- 10-pin 3mm x 3mm MLF® package
- -40ºC to +125ºC junction temperature range

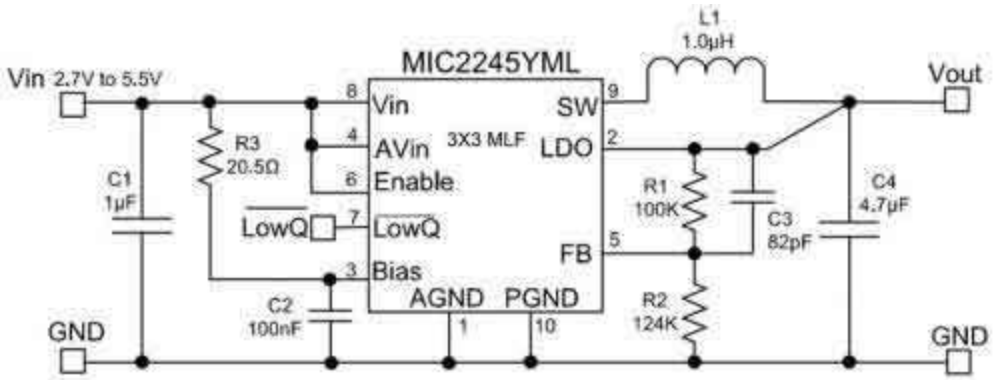

<< BACK

MIC2285

8MHz PWM Synch. Buck Regulator w/ LDO Standby Mode

Online Datasheet

Features:

- 2.7 to 5.5V supply/input voltage
- Light load LowQ® LDO mode:
  - 20µA quiescent current
  - Low noise, 75µVrms
- 8MHz PWM mode:
  - Output current to 500mA
  - >90% efficiency
  - 100% maximum duty cycle
- Adjustable output voltage option down – - to 1V:
  - Fixed output voltage options available
- Ultra-fast transient response
- Uses a tiny 0.47µH inductor
- Enables sub 1mm profile solution
- Fully integrated MOSFET switches
- 10-pin 3mm x 3mm MLF® package
- -40ºC to +125ºC junction temperature range

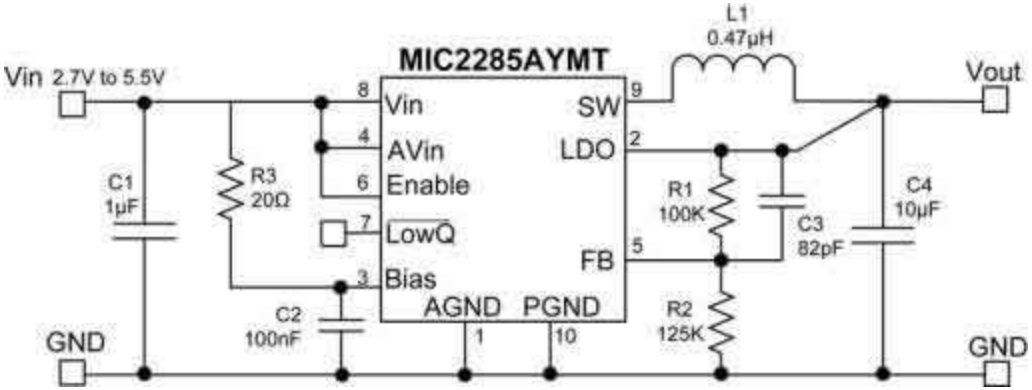

<< BACK

MIC23030

8MHz PWM 400mA Buck Regulator w/ HyperLight Load®

Online Datasheet

Features:

- Input voltage: 2.7V to 5.5V
- 400mA output current
- Up to 91% efficiency and 83% at 1mA
- 21 µA typical quiescent current
- 8MHz PWM operation in continuous mode
- Ultra fast transient response
- Low voltage output ripple:
  - 14mVpp ripple in HyperLight Load® mode
  - 5mV output voltage ripple in full PWM mode
- Fully integrated MOSFET switches
- 0.01 µA shutdown current
- Fixed and adjustable output voltage options –
  - available
- 6-pin 1.6mm x 1.6mm Thin MLF®
- -40ºC to +125ºC junction temperature range

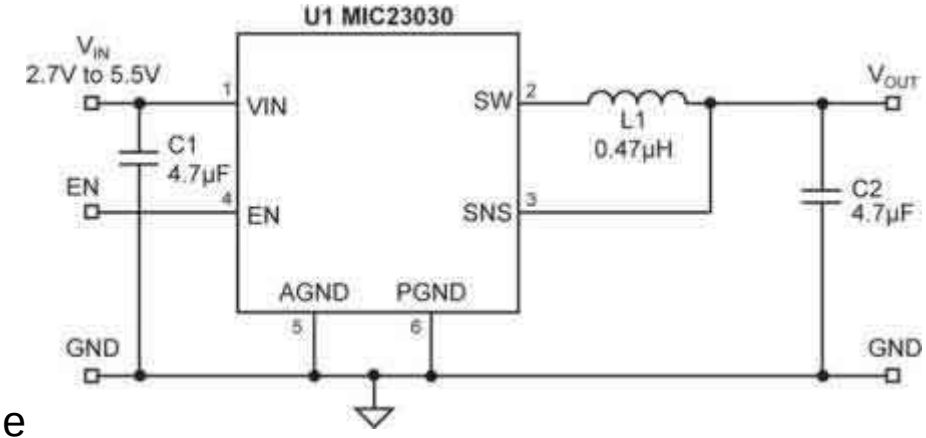

<< BACK

MIC23031

4MHz PWM 400mA Buck Regulator w/ HyperLight Load®

Online Datasheet

Features:

- Input voltage range: 2.7V to 5.5V
- 400mA output current
- Up to 93% efficiency and 88% at 1mA
- 21µA typical quiescent current
- 4MHz PWM operation in continuous mode
- Ultra fast transient response
- Low voltage output ripple:
  - 20mVpp ripple in HyperLight Load® mode
  - 3mV output voltage ripple in full PWM mode
- 0.01µA shutdown current
- Fixed and adjustable output voltage options –
  - available
- 6-pin 1.6mm x 1.6mm Thin MLF®
- -40ºC to +125ºC junction temperature range

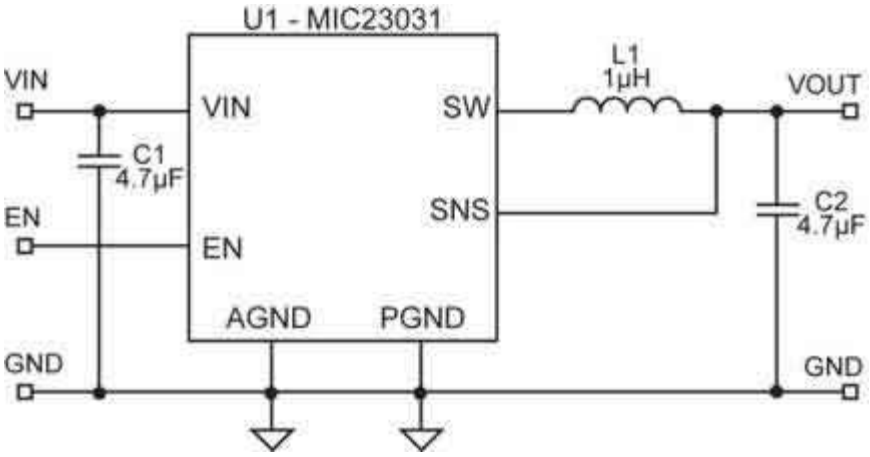

<< BACK

MIC2203

High Efficiency 1MHz Synchronous Buck Regulator

Online Datasheet

Features:

- Input voltage range: 2.3V to 5.5V
- Output voltage adjustable down to 0.5V
- 300mA output current
- Constant 1MHz PWM switching frequency
- > 95% efficiency
- < 1mA switching supply current
- < 350µA static quiescent current
- < 1µA shutdown current
- All-ceramic capacitors
- Easily synchronized to external clock
- SYNCLOCK feature to daisy chain multiple devices
- Thermal shutdown and current limit protection
- 10-pin MSOP, and 3mm x 3mm MLF®-10L package options
- -40ºC to +125ºC junction temperature range

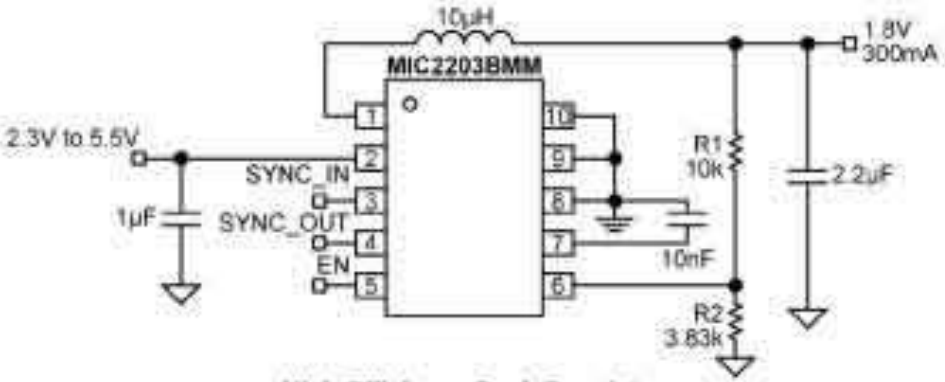

High Efficiency Buck Regulator

<< BACK

MIC4724

3A 6V 2MHz Buck Regulator

Online Datasheet

Features:

- 3.0 to 6.0V supply voltage
- 2.0MHz PWM mode
- Output current to 3A
- Up to 94% efficiency
- 100% maximum duty cycle
- Adjustable output voltage option –
  - down to 1V
- Ultra-fast transient response
- Ultra-small external components stable with –
  - a 1µH inductor and a 4.7µF output capacitor
- Fully integrated 3A MOSFET switch
- Micropower shutdown
- Thermal shutdown and current limit protection
- 10-pin ePad MSOP package
- -40ºC to +125ºC junction temperature range

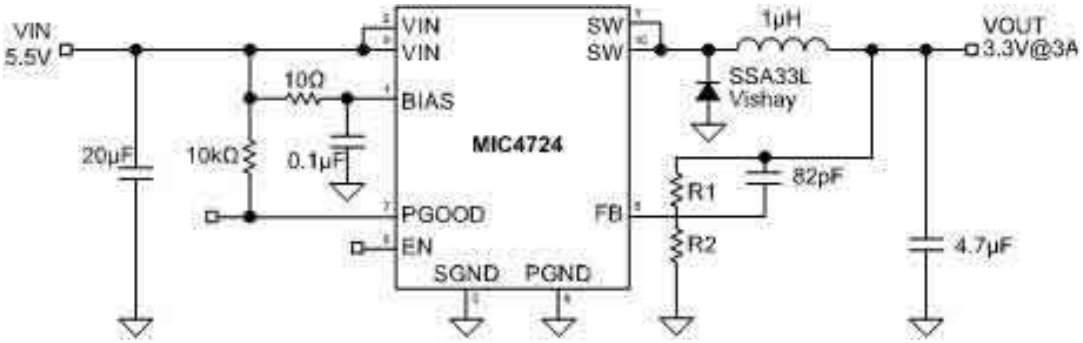

<< BACK

MIC28500

75V/4A Hyper Speed Control™ Synch. DC-DC Buck Regulator

Online Datasheet

Features:

- Hyper Speed Control™ architecture –
  - enables
- High delta V operation (VIN = 75V and –
  - VOUT = 0.8V)
- Small output capacitance
- 30V to 75V voltage input
- Adjustable output down to 0.8V
- ≤1% FB accuracy
- Any Capacitor™ stable
- Zero-ESR to high-ESR output capacitors
- 4A output current capability, up to 90% -
  - efficiency
- 100kHz to 500kHz switching frequency
- Fold-back current-limit and "hiccup" mode short-circuit protection
- Supports safe startup into a pre-biased load
- -40°C to +125°C junction temperature range
- 28-pin 5mm x 6mm MLF® package

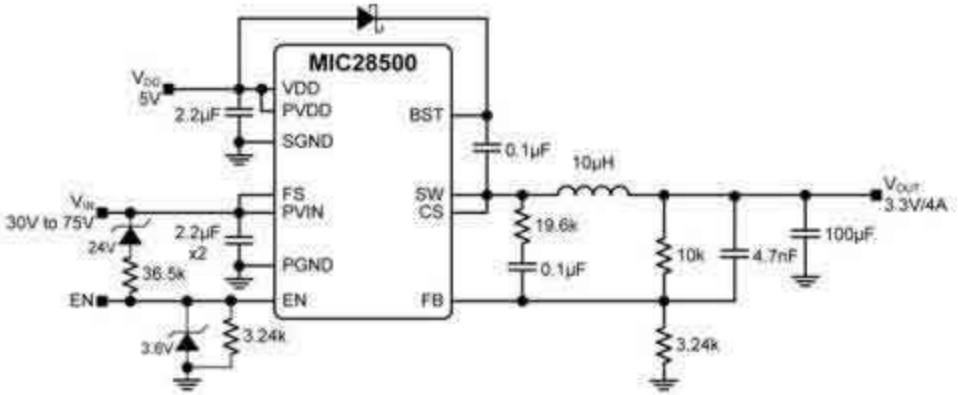

<< BACK

MIC28510

75V/4A Hyper Speed Control™ Synch. DC/DC Buck Regulator

Online Datasheet

Features:

- Hyper Speed Control™ architecture –
  - enables
- Any Capacitor™ stable
- Small output capacitance
- 4.5V to 75V voltage input
- ≤1% FB accuracy
- 4A output current capability, up to 95% -
  - efficiency
- Adjustable output voltage form 0.8V to 24V
- High delta V operation (VIN = 75V and VOUT = 0.8V)
- Zero-ESR to high–ESR output capacitors
- 100kHz to 500kHz switching frequency
- Fold-back current–limit and “hiccup” mode –
  - short-circuit protection
- Supports safe startup into a pre–biased load
- -40ºC to +125ºC junction temperature range
- 28-pin 5mm x 6mm MLF® package

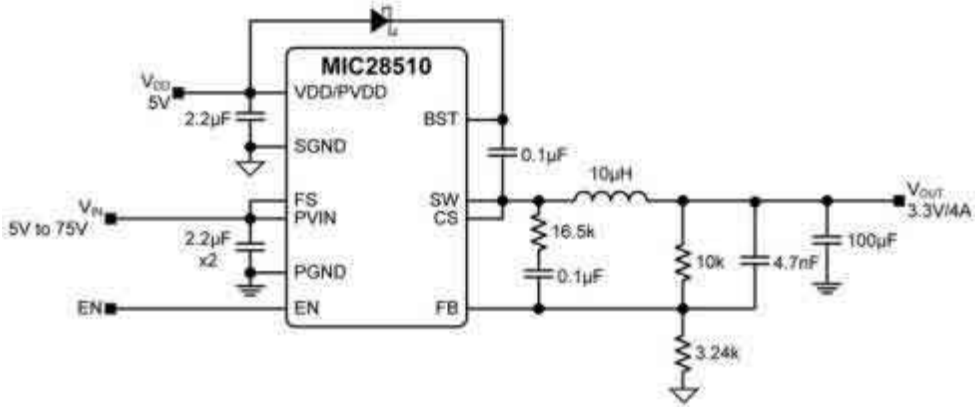

<< BACK

MIC28511

60V 3A Synchronous Buck Regulator

Online Datasheet

Features:

- 4.6V to 60V operating input voltage supply
- Up to 3A output current
- Integrated high-side and low-side N-channel –
  - MOSFETs
- HyperLight Load (MIC28511-1) architecture
- Hyper Speed Control (MIC28511-2) architecture
- Enable input and power good (PGOOD) output
- Programmable current limit
- Fold-back “hiccup” mode short-circuit protection
- Built-in 5V regulator for single-supply operation
- Adjustable 200kHz to 680KHz switching frequency
- Fixed 5ms soft-start
- Internal compensation and thermal shutdown.
- Thermally-enhanced 24-pin 3mm × 4mm FCQFN package
- Junction temperature range of -40ºC to +125ºC

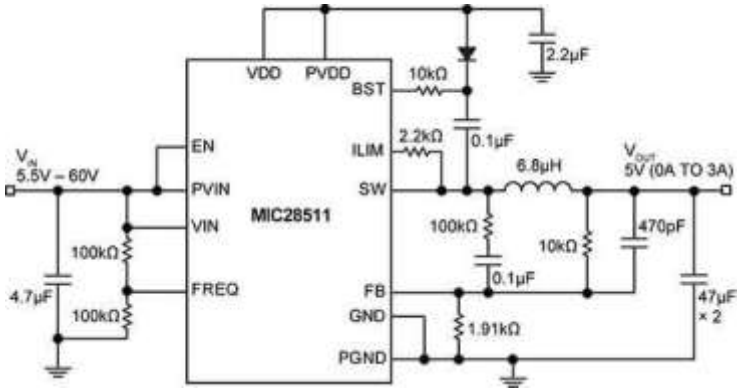

<< BACK

MIC28512

70V 2A Synchronous Buck Regulator

Online Datasheet

Features:

- 4.6V to 70V operating input voltage supply
- Up to 2A output current
- Integrated high-side and low-side N-channel –
  - MOSFETs
- MIC28512-1: HyperLight Load architecture
- MIC28512-2: Hyper Speed Control architecture
- Enable input, Power Good output
- Built-in 5V regulator for single supply operation
- Adjustable 200kHz to 680kHz switching frequency
- Fixed 5ms soft-start
- Programmable current limit and fold-back “hiccup” –
  - mode short circuit protection
- Internal compensation and thermal shutdown.
- Thermally enhanced 24-pin 3mm × 4mm FCQFN
- Junction temperature range of -40ºC to +125ºC

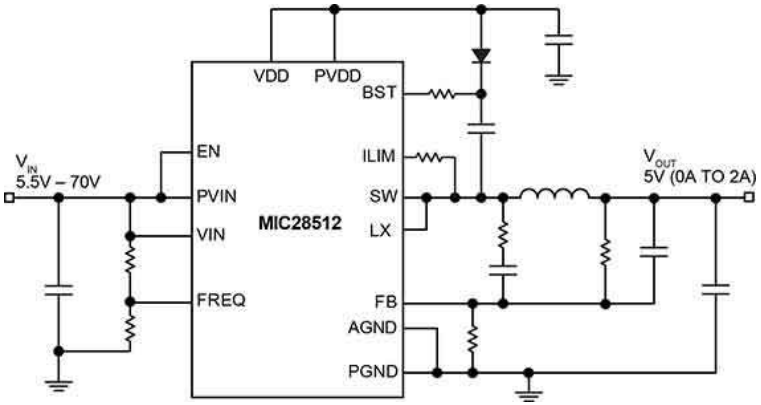

<< BACK

MIC28513

45V 4A Synchronous Buck Regulator

Online Datasheet

Features:

- 4.6V to 45V operating input voltage supply
- Up to 4A output current
- Integrated high-side and low-side N-channel –
  - MOSFETs
- MIC28513-1: HyperLight Load architecture
- MIC28513-2: Hyper Speed Control architecture
- Enable input, Power Good output
- Built-in 5V regulator for single supply operation
- Adjustable 200kHz to 680kHz switching –
  - frequency
- Fixed 5ms soft-start
- Programmable current limit and fold-back –
  - “hiccup” mode short circuit protection
- Internal compensation and thermal shutdown.
- Thermally enhanced 24-pin 3mm × 4mm FCQFN
- Junction temperature range of -40ºC to +125ºC

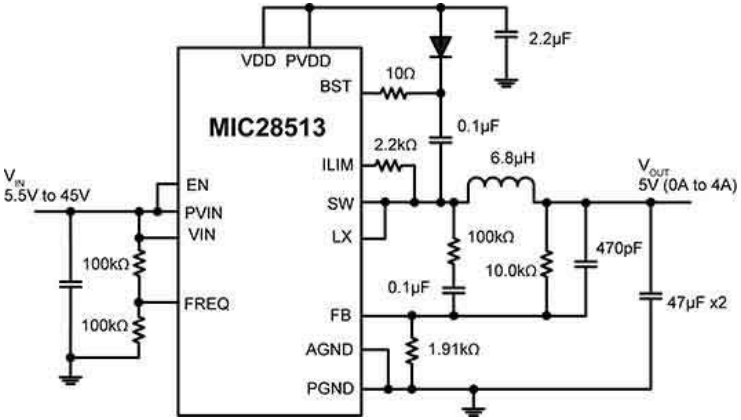

<< BACK

MIC4684

30V 2A Buck Regulator

Online Datasheet

Features:

- SO-8 package with 2A continuous output current
- Over 85% efficiency
- Fixed 200kHz PWM operation
- Wide input voltage range: 4V to 30V
- Output voltage adjustable to 1.235V
- All surface mount solution
- Internally compensated with fast transient response
- Over-current protection
- Frequency fold-back short-circuit protection
- Thermal shutdown

Typical Application

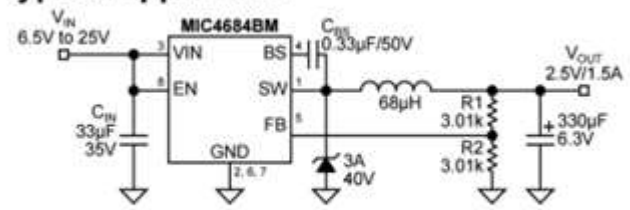

Adjustable Buck Converter

<< BACK

MIC27600

36V 7A Hyper Speed Control™ Synch. DC-DC Buck Regulator

Online Datasheet

Features:

- Hyper Speed Control™ architecture enables:
  - High delta V operation (VIN = 36V and – - VOUT = 0.8V)
  - Small output capacitance
- 4.5V to 36V voltage input
- ±1% FB accuracy
- Adjustable output from 0.8V to 5.5V (VHSD ≤ - - 28V)
- Adjustable output from 0.8V to 3.6V (VHSD ≤ 36V)
- Any Capacitor™ Stable - Zero-ESR to high-ESR
- 7A output current capability, up to 95% efficiency
- 300kHz switching frequency
- Internal compensation, 6ms Internal soft-start
- Fold-back current-limit and "hiccup" mode – - short-circuit protection
- -40ºC to +125ºC junction temperature range
- 28-pin 5mm - 6mm MLF® package

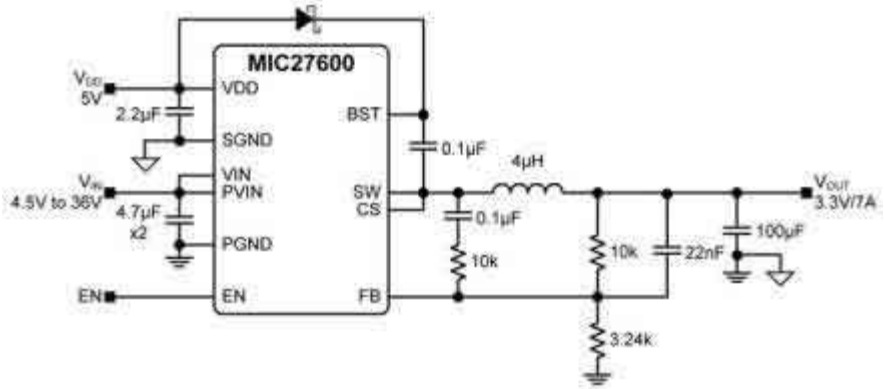

<< BACK

MIC261201

28V 12A Hyper Speed Control™ Synch. Buck Regulator SuperSwitcher II™

Online Datasheet

Features:

- Hyper Speed Control™ architecture enables
- High delta V operation (VIN = 28V and –
  - VOUT = 0.8V)
- Small output capacitance
- 4.5V to 28V voltage input
- 12A output current capability, up to 95% -
  - efficiency
- Adjustable output from 0.8V to 5.5V
- ±1% feedback accuracy
- Any Capacitor® stable - zero-to-high ESR
- 600kHz switching frequency
- No external compensation
- Power Good (PG) output
- Fold-back current-limit and "hiccup" mode –
  - short-circuit protection
- -40ºC to +125ºC junction temperature range
- 28-pin 5mm x 6mm MLF® package

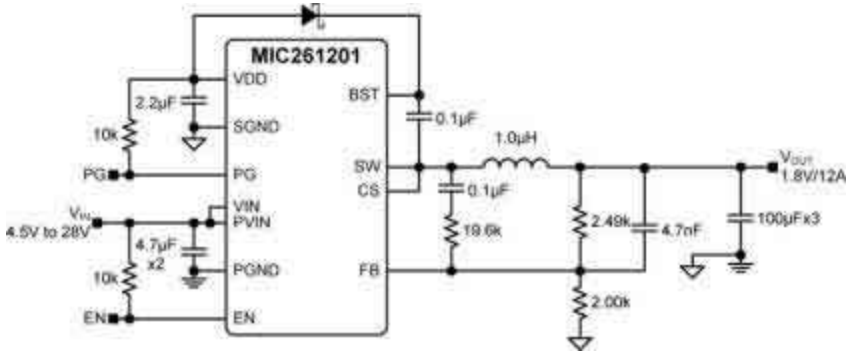

<< BACK

MIC261203

28V 12A HyperLight Load® Synch. Buck Regulator SuperSwitcher IIG™

Online Datasheet

Features:

- HyperLight Load® efficiency - up to 80% at –
  - 10mA
- Hyper Speed Control™ architecture enables:
  - High delta V operation (VIN = 28V and
    - VOUT = 0.8V)
  - Small output capacitance
  - Input voltage range: 4.5V to 28V
  - Output current up to 12A
  - Up to 95% efficiency
  - Adjustable output voltage from 0.8V to 5.5V
- ±1% FB accuracy
- Any Capacitor™ stable - zero-to-high ESR
- 600kHz switching frequency
- Power Good (PG) output
- Fold-back current-limit and "hiccup" mode –
  - short-circuit protection
- 5mm x 6mm MLF® package
- -40ºC to +125ºC junction temperature range

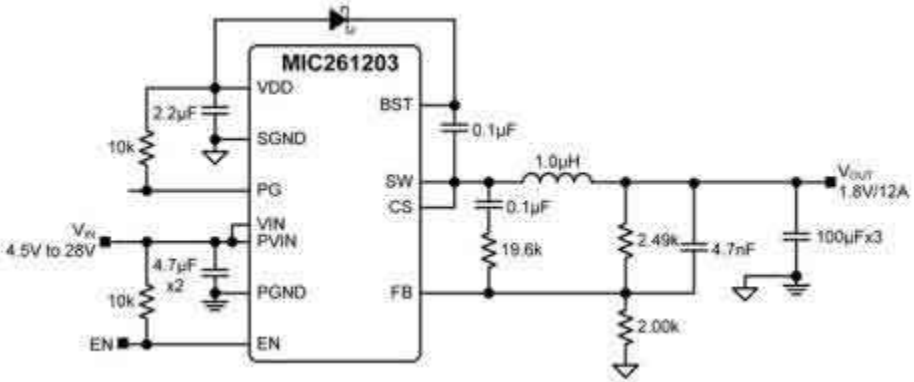

<< BACK

MIC26950

12A Hyper Speed Control™ Synch. Buck Regulator

Online Datasheet

Features:

- 4.5V to 26V input voltage
- Any Capacitor™ Stable
- Zero ESR to high-ESR output capacitance
- 12A output current capability
- Hyper Speed Control™ architecture enables
- High delta V operation (VIN = 26V and –
  - VOUT = 0.8V)
- Small output capacitance
- 300kHz switching frequency
- Adjustable output from 0.8V to 5.5V (±1% accuracy)
- Up to 95% efficiency
- 6ms Internal soft-start
- Fold-back current-limit and "hiccup" mode –
  - short-circuit protection
- -40ºC to +125ºC junction temperature range
- 28-pin 5mm x 6mm MLF® package

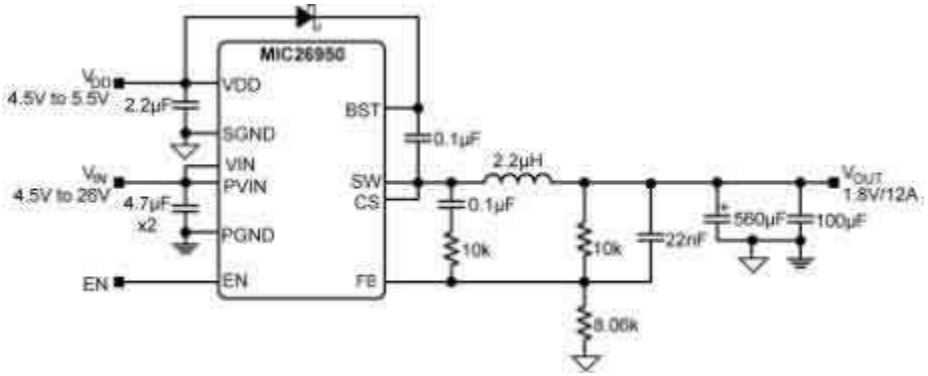

<< BACK

MIC26901

28V 9A Hyper Speed Control™ Synch. Buck Regulator SuperSwitcher II™

Online Datasheet

Features:

- Hyper Speed Control™ architecture enables
- High delta V operation (VIN = 28V and –
  - VOUT = 0.8V)
- Small output capacitance
- 4.5V to 28V voltage input
- 9A output current capability, up to 95% efficiency
- Adjustable output from 0.8V to 5.5V
- ±1% feedback accuracy
- Any Capacitor™ stable -zero-to-high ESR
- 600kHz switching frequency
- No external compensation
- Fold-back current-limit and "hiccup mode" –
  - short-circuit protection
- Supports safe startup into a pre-biased load
- -40ºC to +125ºC junction temperature range
- 28-pin 5mm x 6mm MLF® package

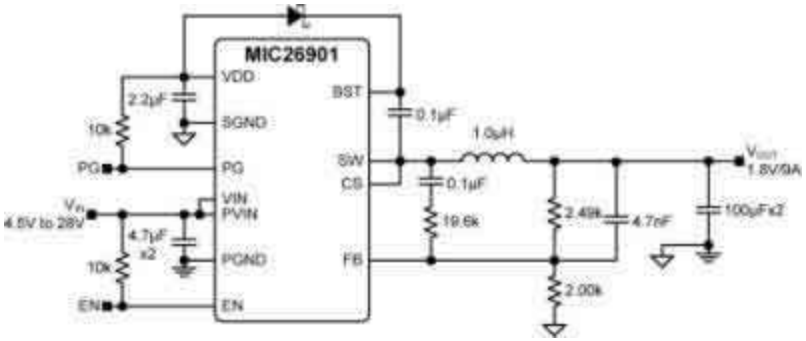

<< BACK

MIC26903

28V 9A HyperLight Load® Synch. BuckRegulator SuperSwitcher IIG™

Online Datasheet

Features:

- HyperLight Load® efficiency - up to 80% at – - 10mA
- Hyper Speed Control™ architecture enables:
  - High delta V operation (VIN = 28V and – - VOUT = 0.8V)
  - Small output capacitance
  - Input voltage range: 4.5V to 28V
  - Output current up to 9A
  - Up to 95% efficiency
  - Adjustable output voltage from 0.8V to 5.5V
- ±1% FB accuracy
- Any Capacitor™ stable - zero-to-high ESR
- 600kHz switching frequency
- Power Good (PG) output
- Fold-back current-limit and "hiccup" mode – - short-circuit protection
- 5mm x 6mm MLF® package
- -40ºC to +125ºC junction temperature range

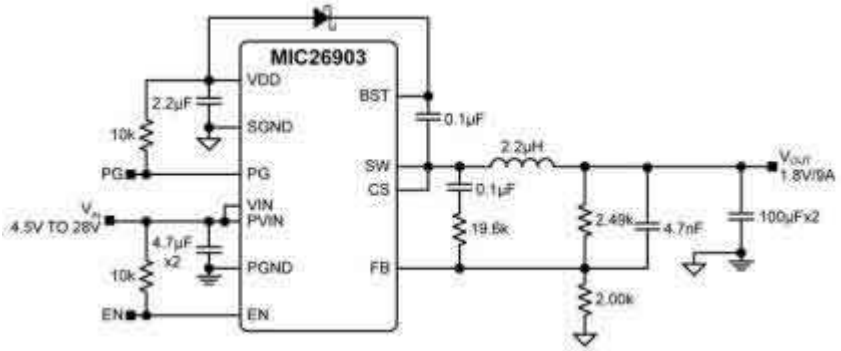

<< BACK

MIC26600

7A Hyper Speed Control™ Synch. Buck Regulator SuperSwitcher II™

Online Datasheet

Features:

- Hyper Speed Control™ architecture enables
- High delta V operation (VIN = 26V and –
  - VOUT = 0.8V)
- Small output capacitance
- 4.5V to 26V input voltage
- Adjustable output from 0.8V to 5.5V (±1% -
  - accuracy)
- Any Capacitor™ Stable
- Zero ESR to high ESR output capacitance
- 7A output current capability
- 300kHz switching frequency
- Up to 95% efficiency
- 6ms Internal soft-start
- Fold-back current limit and "hiccup" mode –
  - short-circuit protection
- -40ºC to +125ºC junction temperature range
- 28-pin 5mm x 6mm MLF® package

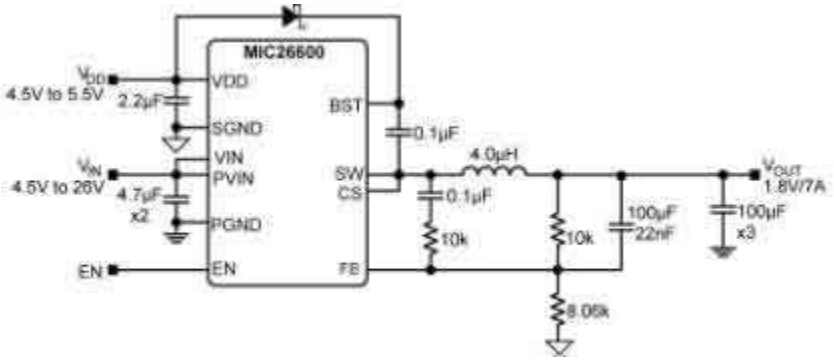

<< BACK

MIC26601

28V 6A Hyper Speed Control™ Synch. Buck Regulator SuperSwitcher II™

Online Datasheet

Features:

- Hyper Speed Control™ architecture enables
- High delta V operation (VIN = 28V and –
  - VOUT = 0.8V)
- Small output capacitance
- 4.5V to 28V voltage input
- 6A output current capability, up to 95% efficiency
- Adjustable output from 0.8V to 5.5V
- ±1% feedback accuracy
- Any Capacitor™ stable - zero-to-high ESR
- 600kHz switching frequency
- No external compensation
- Power Good (PG) output
- Fold-back current-limit and "hiccup mode" –
  - short-circuit protection
- -40ºC to +125ºC junction temperature range
- 28-pin 5mm x 6mm MLF® package

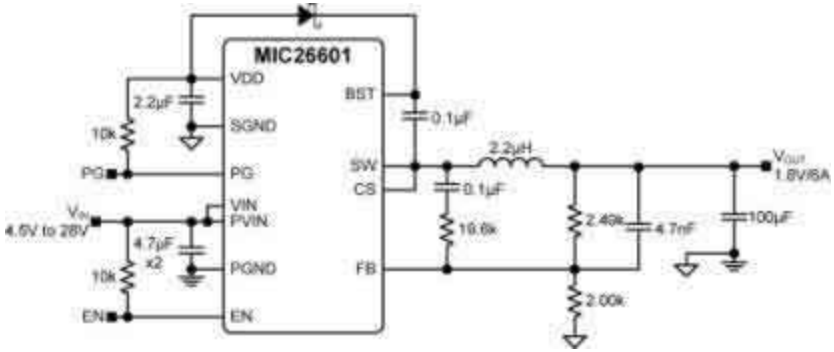

<< BACK

MIC26603

28V 6A HyperLight Load® Synch Buck Regulator SuperSwitcher IIG™

Online Datasheet

Features:

- HyperLight Load® efficiency - up to 80% at – - 10mA
- Hyper Speed Control™ architecture enables
- High delta V operation (VIN = 28V and – - VOUT = 0.8V)
- Small output capacitance
- Input voltage range: 4.5V to 28V
- Output current up to 6A
- Up to 95% efficiency
- Adjustable output voltage from 0.8V to 5.5V
- ±1% FB accuracy
- Any CapacitorTM stable - zero-to-high ESR
- 600kHz switching frequency
- Fold-back current-limit and "hiccup" mode short – circuit protection
- Safe start-up into pre-biased loads
- 5mm x 6mm MLF® package
- -40ºC to +125ºC junction temperature range

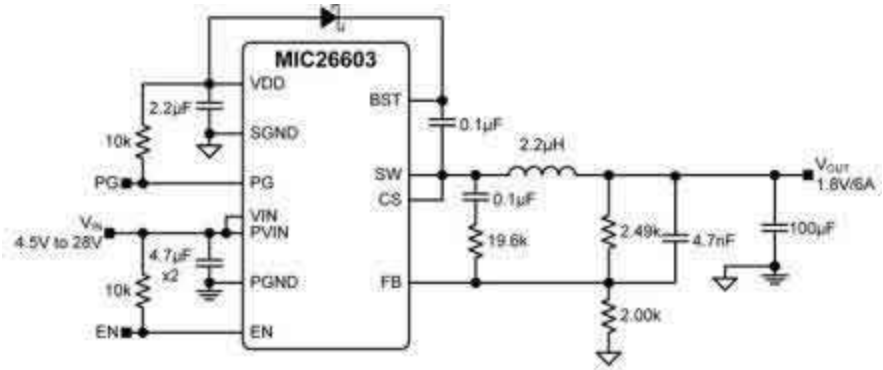

<< BACK

MIC26400

5A Hyper Speed Control™ Synch. Buck Regulator SuperSwitcher II™

Online Datasheet

Features:

- 4.5V to 26V input voltage
- Any Capacitor™ Stable:
  - Zero ESR to high-ESR output –
    - capacitance
- 5A output current capability
- Hyper Speed Control™ architecture –
  - enables:
    - High delta V operation (VIN = 26V –
      - and VOUT = 0.8V)
    - Small output capacitance
- Adjustable output from 0.8V to 5.5V (±1% accuracy)
- 300kHz switching frequency
- Up to 95% efficiency
- 6ms Internal soft-start
- Fold-back current limit and "hiccup" mode short –
  - circuit protection
- -40ºC to +125ºC junction temperature range
- 28-pin 5mm X 6mm MLF® package

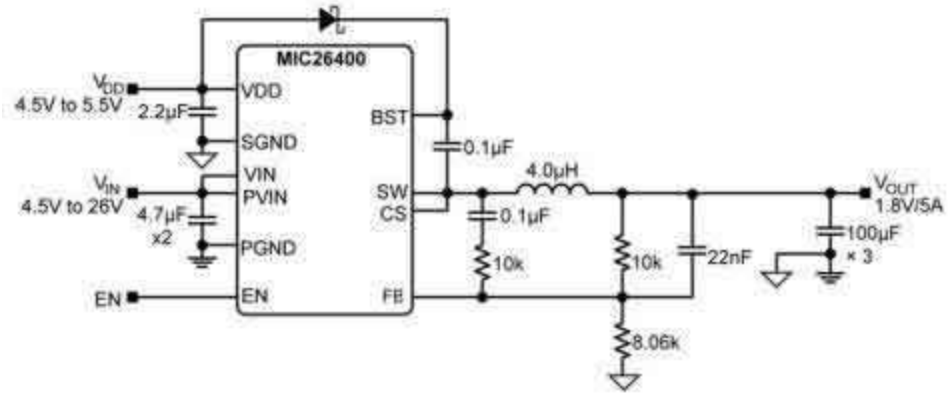

<< BACK

MIC24055/56

12V 12A High-Efficiency Buck Regulator SuperSwitcher II™

Online Datasheet

Features:

- HyperLight Load® efficiency – up to 80% at –
  - 10mA:
    - Hyper Speed Control™ architecture –
      - enables
    - High delta V operation (VIN = 19V and –
      - VOUT = 0.8V)
- Small output capacitance
- Input voltage range: 4.5V to 19V
- Output current up to 12A
- Up to 95% efficiency
- Adjustable output voltage from 0.8V to 5.5V
- ±1% feedback accuracy
- Any Capacitor™ stable - zero-to-high ESR
- 600kHz switching frequency
- Foldback current-limit and "hiccup" mode short –
  - circuit protection
- -40ºC to +125ºC junction temperature range
- Available in 28-pin 5mm × 6mm QFN package

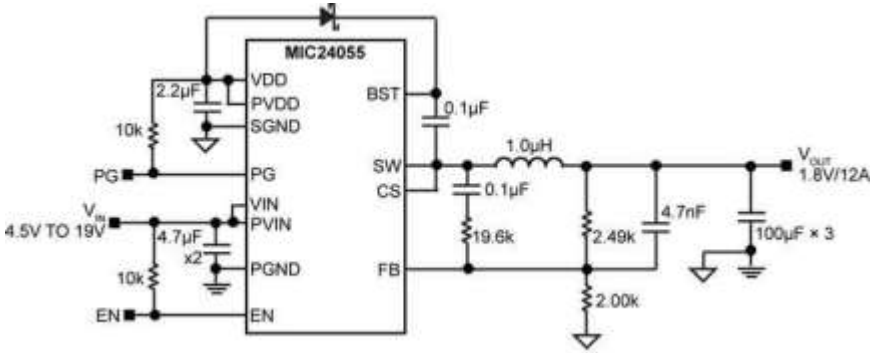

<< BACK

MIC24053/54

12V 9A High-Efficiency Buck Regulator SuperSwitcher II™

Online Datasheet

Features:

- HyperLight Load® efficiency - up to 80% at – - 10mA:
  - Hyper Speed Control™ architecture enables
  - High delta V operation (VIN = 19V and – - VOUT = 0.8V)
- Small output capacitance
- Input voltage range: 4.5V to 19V
- Output current up to 9A, up to 95% efficiency
- Adjustable output voltage from 0.8V to 5.5V
- ±1% feedback accuracy
- Any Capacitor™ stable - zero-to-high ESR
- 600kHz switching frequency
- No external compensation
- Fold-back current-limit and "hiccup" mode – - short-circuit protection
- Supports safe start-up into pre-biased loads
- -40ºC to +125ºC junction temperature range
- Available in 28-pin 5mm × 6mm QFN package

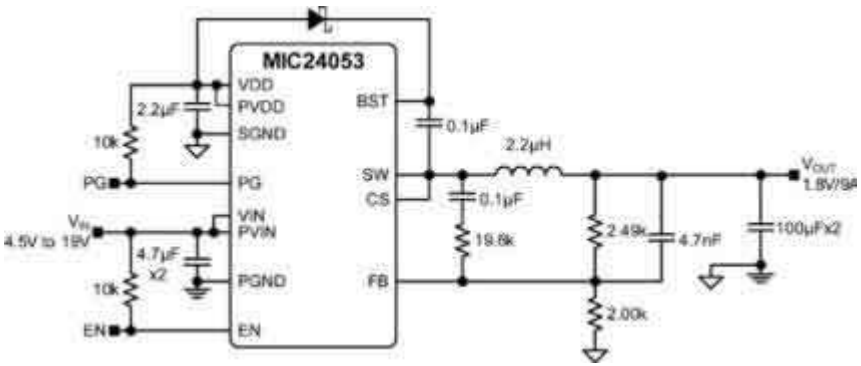

<< BACK

MIC24051/52

12V 6A High-Efficiency Buck Regulator SuperSwitcher II™

Online Datasheet

Features:

- Hyper Speed Control™ architecture enables
- High delta V operation (VIN = 19V and –
  - VOUT = 0.8V)
- Small output capacitance
- 4.5V to 19V input voltage
- No external compensation
- Any Capacitor™ stable - Zero-to-high ESR
- 6A output current capability, up to 95% -
  - efficiency
- 600kHz switching frequency
- Adjustable output from 0.8V to 5.5V (±1% -
  - accuracy)
- Power Good (PG) output
- Fold-back current limit and "hiccup" mode –
  - short-circuit protection
- Supports safe start-up into a pre-biased load
- -40ºC to +125ºC junction temperature range
- Available in 28-pin 5mm X 6mm QFN package

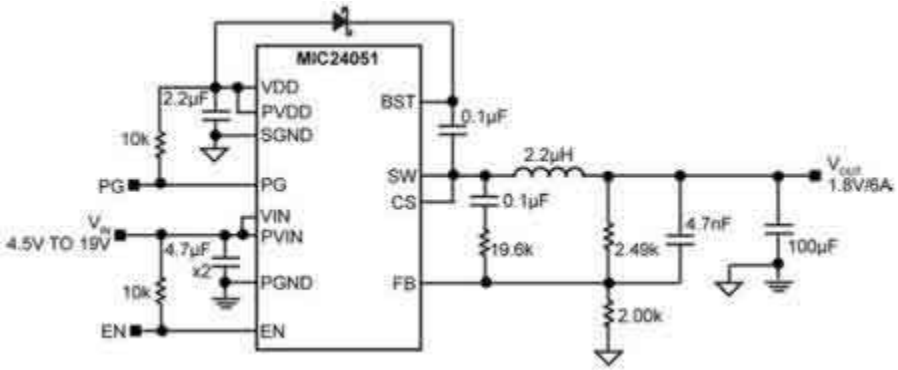

<< BACK

MIC24046

Pin-Programmable 19V 5A Step-Down Converter

Online Datasheet

Features:

- Input voltage range: 4.5V to 19V
- 5A output current
- >90% efficiency over wide load range
- 9 pin-selectable output voltage value: -
  - 0.7V, 0.8V, 0.9V, 1.0V, 1.2V, 1.5V, 1.8V,
  - 2.5V, 3.3V
- Pin-selectable current limit: -
  - for 3A to 5A applications, 3 values
- Pin-selectable switching frequency:
- 400kHz, 565kHz, 790kHz
- Capacitor-adjustable turn-on delay
- Power Good Status Output
- 20-pin 3mm x 3mm QFN package (0.5mm –
  - pin pitch)

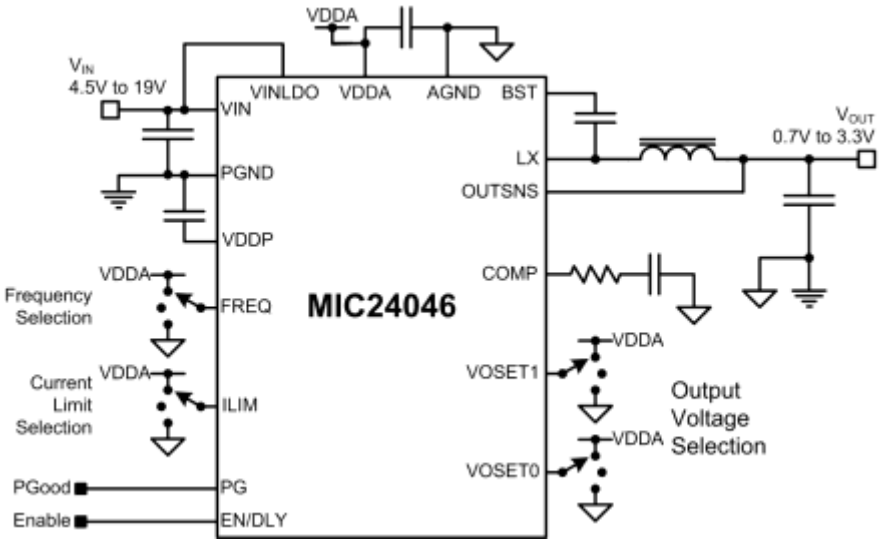

Applications:

Network Switch and Routers
Base Station, Telecom
Servers
Storage
FPGA and DSP Power
Micro Servers

<< BACK

MIC24045

I²C Programmable 4.5V-19V Input 5A Step-Down Converter

Online Datasheet

Features:

- 4.5V to 19V Input Voltage Range
- 5A (maximum) Output Current
- I2C Programmable Output Voltage:
  - 0.64V to 5.25V in 5 mV, 10 mV, 30 – - mV and
- 50 mV steps
- High Efficiency (>95%)
- I2C Programmability of:
  - Soft-Start: 0.16, 0.38, 0.76 and – - 1.5V/ms ramp rates
  - Switching Frequency: 310 kHz, 400 – - kHz, 500 kHz, 570 kHz, 660 kHz, - - 780 kHz, 1 MHz, 1.2 MHz
  - Current Limits for 2A, 3A, 4A and 5A loads
  - Output Voltage Margining: -5%, +5%
  - Start-up delays: 0 ms to 10 ms
- ±1% Output Voltage Accuracy Over Temperature
- Supports Safe Start-Up with Pre-Biased Output
- Extensive Diagnostics through I2C Interface

Typical Application

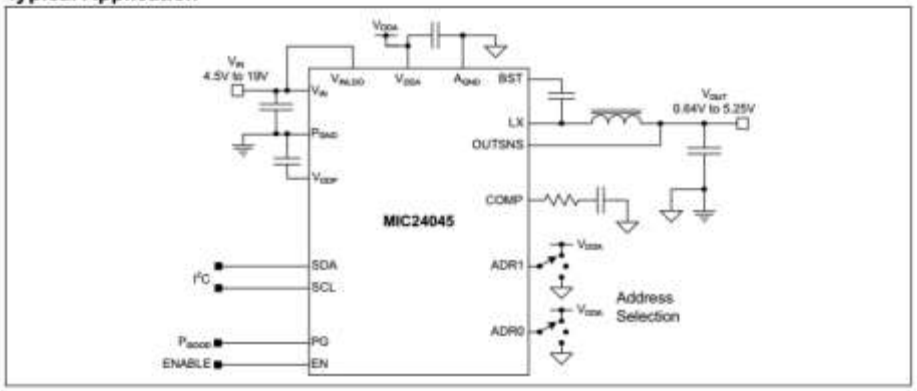

Applications:

Network Switch and Routers
Base Station, Telecom Servers
Storage
FPGA and DSP Power
Micro Servers

<< BACK

MIC2176-1/2/3

Wide Input Voltage Synch. Buck Controllers with Adaptive On-Time Control

Online Datasheet

Features:

- Hyper Speed Control™ architecture enables
- High delta V operation –
  - (VIN = 75V and VOUT = 1.2V)
- Small output capacitance
- 4.5V to 75V input voltage
- Output down to 0.8V with ±1% accuracy
- Any Capacitor™ stable
- Zero-ESR to high-ESR output capacitance
- 100kHz/200kHz/300kHz switching frequency
- Internal compensation
- 6ms Internal soft-start
- Fold-back current limit and "hiccup" mode short – circuit protection
- Thermal shutdown
- Supports safe start-up into a pre-biased output
- -40ºC to +125ºC junction temperature range
- Available in 10-pin MSOP package

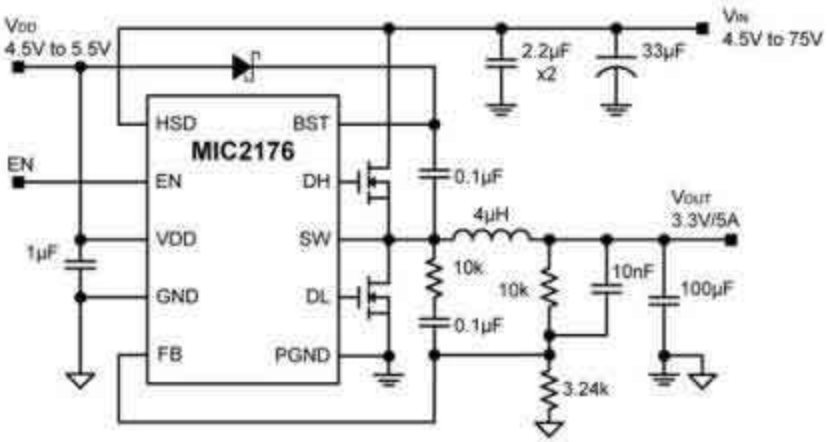

<< BACK

MIC2103/4

75V Synch. Buck Controllers with Adaptive On-Time Control

Online Datasheet

Features:

- Hyper Speed Control™ architecture enables:
  - High delta V operation (V IN=75V and - - VOUT=1.2V)
  - Any Capacitor™ stable
- 4.5V to 75V input voltage
- 0.8V Reference Voltage with ±1% accuracy
- 200kHz - 600kHz, programmable switching freq.
- Hyper Light Load Control (MIC2103 only)
- Hyper Speed Control (MIC2104 only)
- Enable input, Power-Good output
- Built-in 5V regulator for single-supply operation
- Programmable current limit and fold-back – - “hiccup” mode short-circuit protection
- 5ms internal soft-start, internal compensation, - - and thermal shutdown
- Supports safe start-up into a pre-biased output
- -40ºC to +125ºC junction temperature range
- Available in 16-pin 3mm x 3mm MLF® package

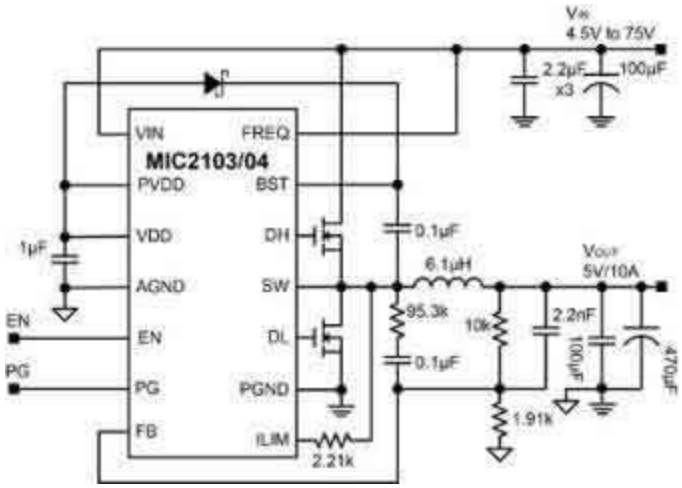

<< BACK

MIC2128

75V Synch. Buck Controller with Adaptive On-Time Control

Online Datasheet

Features:

- 4.5V to 75V input voltage
- Hyper Speed Control architecture
- High Delta V operation
- Any Capacitor™ stable
- Adjustable output voltage from 0.6 V to 24V:
  - Also limited by duty cycle
- Up to 800kHz, programmable switching –
  - frequency
- Built-in 5V regulator for single-supply operation
- Programmable current limit and “hiccup” mode –
  - short-circuit protection
- Programmable External soft start
- Internal compensation, and thermal shutdown
- Option for External and Internal VDD
- Supports safe start-up into a pre-biased output
- -40°C to +125°C junction temperature range
- Available in 16-pin 3mm x 3mm QFN Package

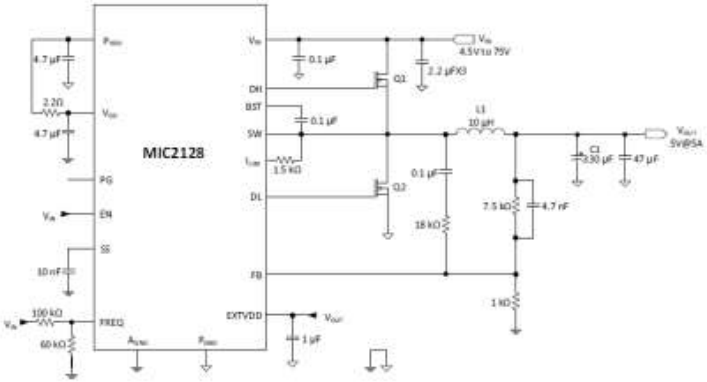

Applications

- ✓ Telecom & Datacomm
- ✓ Servers and storage
- ✓ Automotive Infotainment (Non AECQ-100)
- ✓ Industrial Control
- ✓ HVAC equipment

<< BACK

MIC2127A

75V Synch. Sync Buck Controller with Adaptive On-Time Control

Online Datasheet

Features:

- 4.5V to 75V input voltage
- Hyper Speed Control architecture
- High Delta V operation
- Any Capacitor™ stable
- Adjustable output voltage from 0.6 V to 30V
- 270kHz - 800kHz, programmable switching –
  - frequency
- Built-in 5V regulator for single-supply operation
- Bootstrap LDO for improved system efficiency –
  - at light loads
- Programmable current limit and “hiccup” mode –
  - short-circuit protection
- Soft start, internal compensation, & thermal –
  - shutdown
- Selectable light load operating mode (MODE)
- Enable input and Power Good output
- Supports safe start-up into a pre-biased output
- -40°C to +125°C junction temperature range
- Available in 16-pin 3mm x 3mm QFN Package

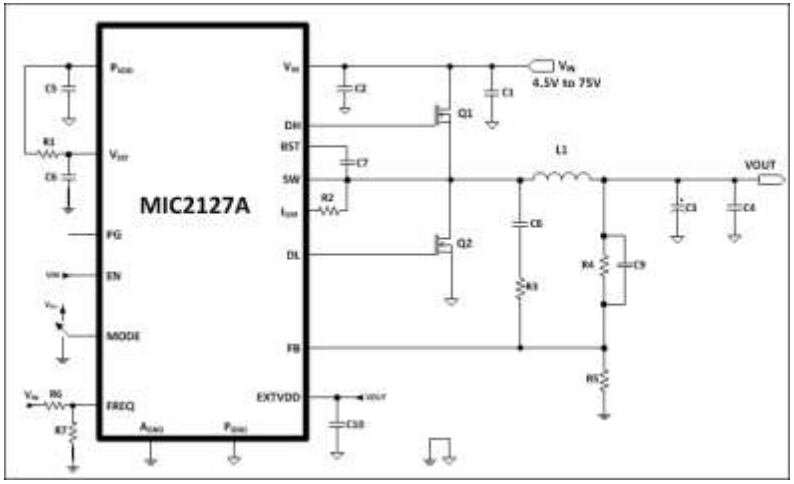

Highlights:

- ✓ Internal boost strap
- ✓ 0.6V Reference
- ✓ Selectable Light Load Operating mode
- ✓ Programmable Current limit & Frequency

<< BACK

MIC2130/1–1/4

High Voltage Synchronous Buck Control IC with Low EMI Option

Online Datasheet

Features:

- 8V to 40V input voltage range
- Adjustable output voltages down to 0.7V
- Low EMI option (MIC2131)
- Fixed 150kHz and 400kHz frequency options
- Adaptive gate drive allows efficiencies over 95%
- Programmable current limit with no sense –
  - resistor
- Senses low-side MOSFET current
- Excellent line and load regulation due to fast hysteretic control loop during transients
- Internal drivers allow 15A output current
- Power Good output allow simple sequencing
- 100% increase in current limit (MIC2131)
- 16-pin e-TSSOP and 16-pin 4mm x 4mm MLF®
- Junction temperature range of -40ºC to +125ºC

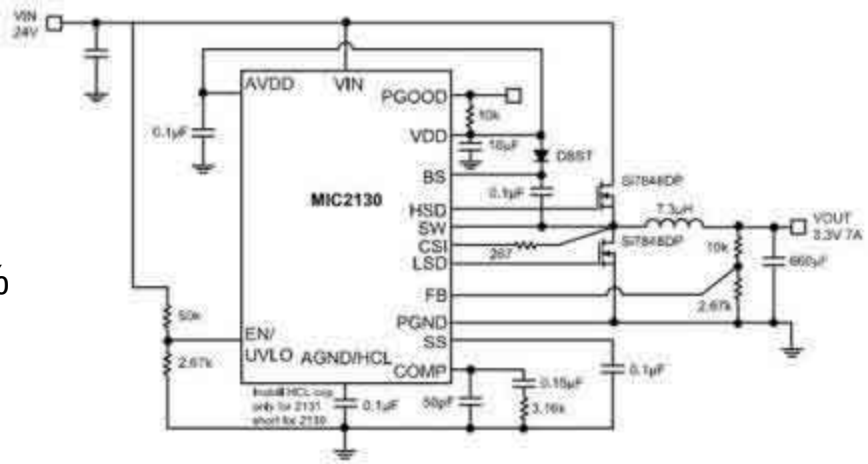

<< BACK

MIC2101/2

38V Synchronous Buck Controllers with Adaptive On-Time Control

Online Datasheet

Features:

- Hyper Speed Control™ architecture enables:
  - High delta V operation (V IN=38V and -
    - VOUT=1.2V)
  - Any Capacitor™ stable
- 4.5V to 38V input voltage
- 0.8V Reference Voltage with ±1% accuracy
- Hyper Light Load Control (MIC2101 only)
- Hyper Speed Control (MIC2102 only)
- Enable input, Power-Good output
- 200kHz to 600kHz, programmable switching –
  - frequency
- Built-in 5V regulator for single-supply operation
- Programmable current limit and fold-back “hiccup” –
  - mode short-circuit protection
- 5ms internal soft-start, internal compensation, and –
  - thermal shutdown
- -40ºC to +125ºC junction temperature range
- Available in 16-pin 3mm x 3mm MLF® package

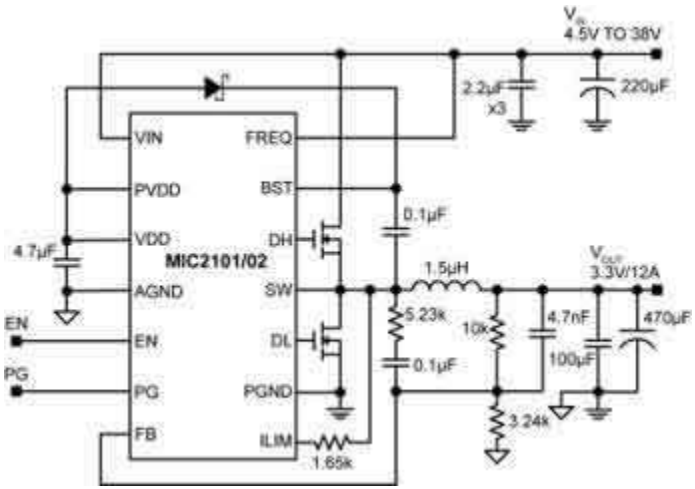

<< BACK

MIC2182

High-Efficiency Synchronous Buck Controller

Online Datasheet

Features:

- 4.5V to 32V Input voltage range
- 1.25V to 6V Output voltage range
- 95% efficiency
- 300kHz oscillator frequency
- 5ω impedance MOSFET Drivers
- Drives N-Channel MOSFETs
- 600µA typical quiescent current (skip-mode)
- Logic controlled micropower shutdown (IQ –
  - <0.1µA)
- Cycle-by-cycle current limiting
- Precision 1.245V reference output
- 0.6% total regulation
- 16-pin SOP and SSOP packages
- Sustained short-circuit protection at any input voltage
- 20A output current capability

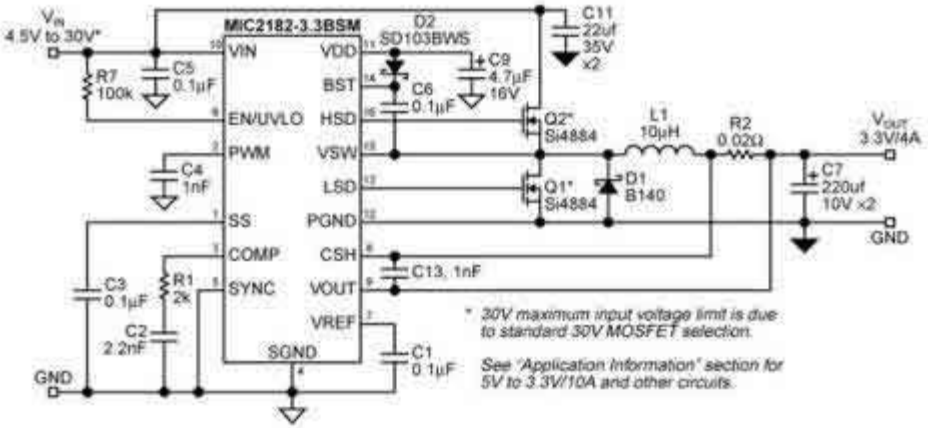

<< BACK

MIC2198

500kHz 4mm x 4mm Synchronous Buck Controller

Online Datasheet

Features:

- 4.5V to 32V input range
- 4mm x 4mm MLF® package
- 500kHz PWM operation
- >90% efficiency
- Output voltage adjustable down to 0.8V
- 20A output current capability
- Drives all N-Channel MOSFETs
- Logic controlled micropower shutdown
- Cycle-by-cycle current limiting
- Adjustable under-voltage lockout
- Frequency fold-back overcurrent protection

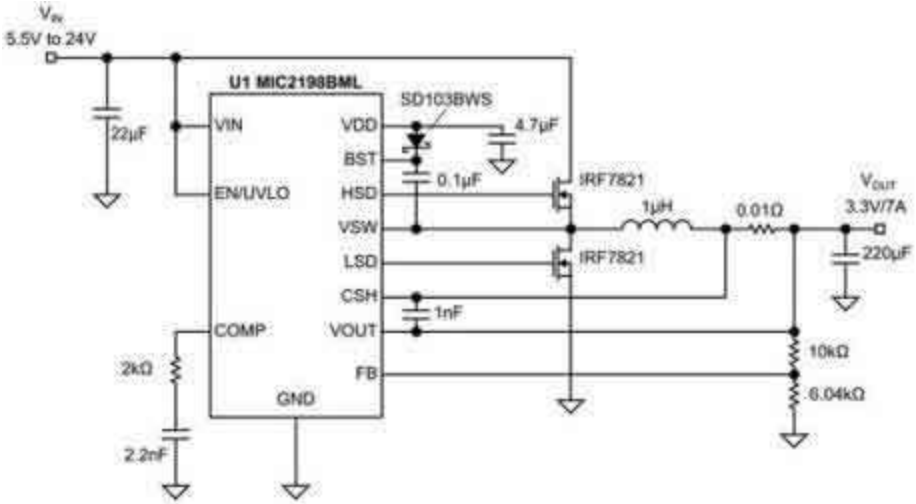

<< BACK

MIC2199

300kHz 4mm x 4mm Synchronous Buck Controller

Online Datasheet

Features:

- 4.5V to 32V input range
- 4mm x 4mm MLF® package
- 300kHz PWM operation
- 95% efficiency
- Output voltage adjustable down to 0.8V
- 20A output current capability
- Drives all N-Channel MOSFETs
- Logic controlled micropower shutdown
- Cycle-by-cycle current limiting
- Adjustable under-voltage lockout
- Frequency fold-back overcurrent protection

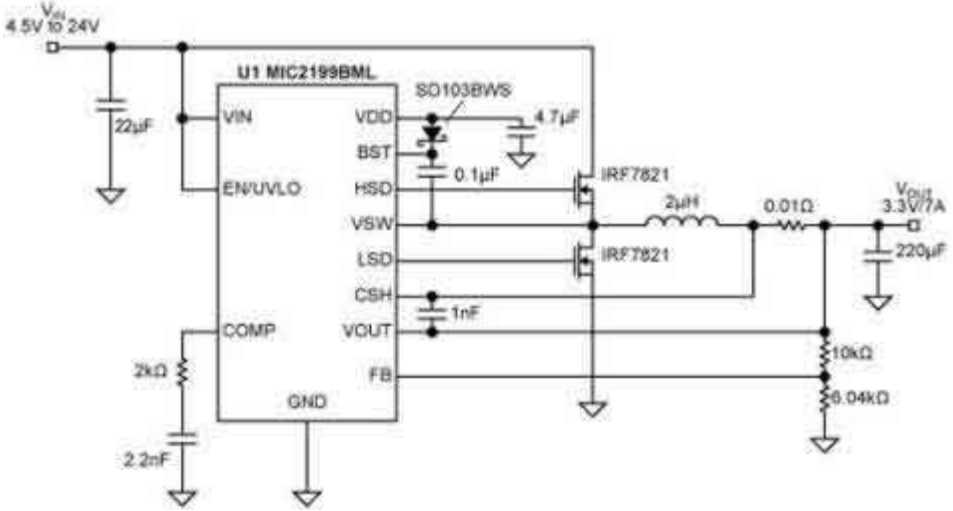

<< BACK

MIC2164/-2/-3/C

300kHz PWM Buck Controller

Online Datasheet

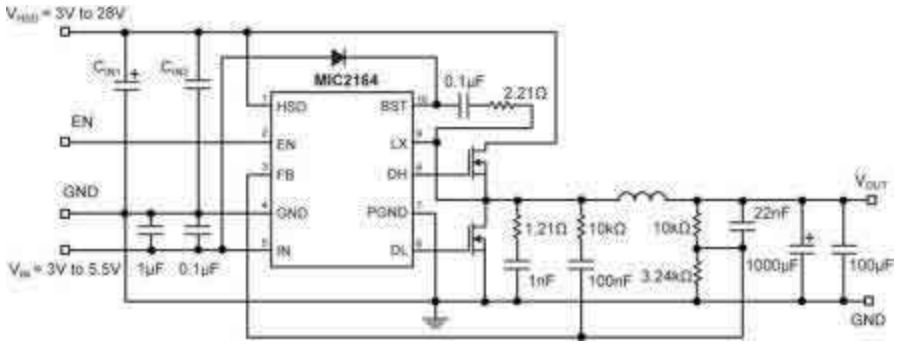

Features:

- 3V to 28V input voltage
- Zero ESR to high ESR
- 25A output current capability
- 300kHz/600kHz/1MHz switching frequency
- Adaptive on-time mode control
- Hyper Speed Control™ architecture enables
- High delta V operation (V HSD=28V and V – - OUT=0.8V)
- Smaller output capacitors than competitors
- Adjustable output from 0.8V to 5.5Vwith ±1% - - (MIC2164/-2/-3) or ±3% (MIC2164C) feedback accuracy
- Up to 95% efficiency
- Fold-back current limit and "hiccup" mode short-circuit protection
- -40ºC to +125ºC junction temperature range
- Available in 10-pin MSOP package

<< BACK

MIC2165

Adaptive On-Time DC-DC Controller w/ HyperLight Load® Hyper Speed Control™

Online Datasheet

Features:

- Hyper Speed Control™ architecture enables:
  - High VIN/Low VOUT operation (VIN=28V – - and VOUT=0.8V)
  - Smallest output capacitance
- HyperLight Load® Efficiency
- Built-in 5V regulator for single-supply operation
- Any Capacitor™ stable: Zero ESR to high ESR
- Power-Good output
- Input voltage range: 4.5V to 28V
- 5 µA typical shutdown current
- 25A output current drive capability
- Adjustable output from 0.8Vto 5.5V with ±1% - - FB Accuracy
- 600kHz switching frequency
- Internal 5ms digital soft start
- Thermal shutdown and "hiccup" current limit – - protection
- No external current-sense resistor required
- Safe start-up into pre-biased loads
- 10-pin MSOP ePad package

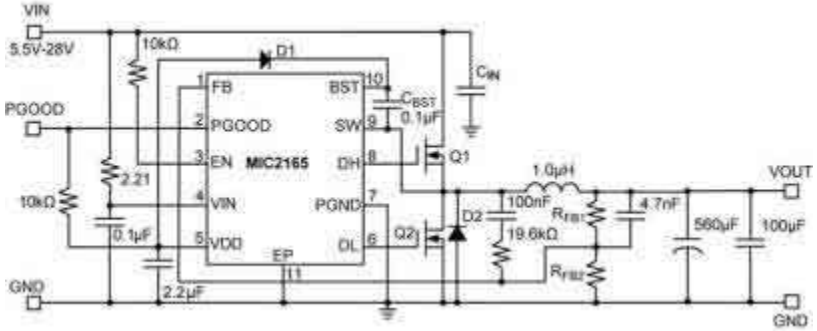

<< BACK

MIC2166

Adaptive On-Time DC-DC Controller Hyper Speed Control™ Family

Online Datasheet

Features:

- Hyper Speed Control™ architecture enables:
  - High delta V operation (V IN=28V and V – - OUT=0.8V)
  - Smallest output capacitance
- Built-in 5V regulator for single-supply operation
- Any Capacitor™ stable: Zero ESR to high ESR
- Power Good (PGOOD) output
- Input voltage range: 4.5V to 28V
- 5µA typical shutdown current
- 25A output current drive capability
- Adjustable output from +0.8V to 5.5V with ±1% - - accuracy
- 600kHz switching frequency
- Internal 5ms digital soft-start
- Thermal shutdown and "hiccup" current limit – - protection
- No external current-sense resistor required
- Safe start-up into pre-biased loads
- 10-pin MSOP ePad package

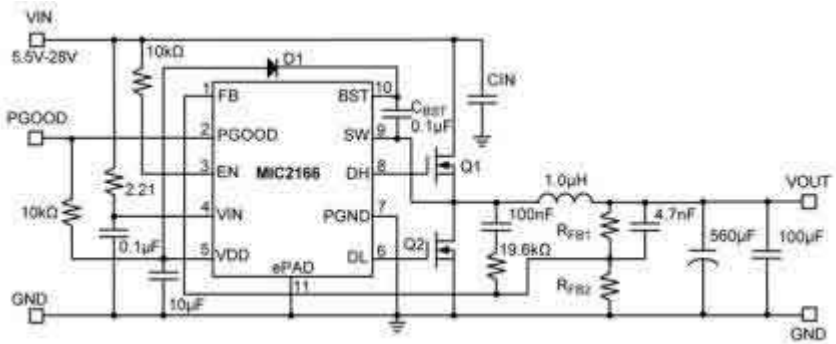

<< BACK

MIC2125

28V Synchronous Buck Controllers Ft. Adaptive ON-Time Control

Online Datasheet

Features:

- Hyper Speed Control Architecture Enables:
  - High delta V operation (VIN = 28V and –
    - VOUT = 0.6V)
  - Any Capacitor™ stable
- 4.5V to 28V Input Voltage
- Adjustable Output Voltage from 0.6V to 24V
- 200 kHz to 750 kHz Programmable Switching –
  - Frequency
- HyperLight Load® (MIC2125)
- Enable Input and Power Good Output
- Built-in 5V Regulator for Single-Supply Operation
- Programmable current limit and “hiccup” mode –
  - short-circuit protection
- 7 ms internal soft-start, internal compensation, -
  - and thermal shutdown
- Supports Safe Start-Up into a Pre-biased Output
- –40°C to +125°C Junction Temperature Range
- Available in 16-pin, 3 mm × 3 mm QFN Package

Typical Application Circuit

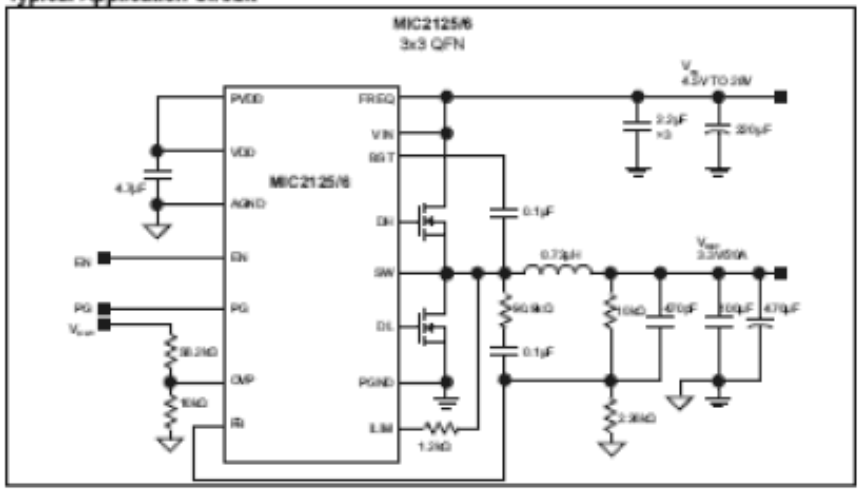

<< BACK

MIC2126

28V Synchronous Buck Controllers w/ Adaptive ON-Time Control

Online Datasheet

Features:

- Hyper Speed Control Architecture Enables:
  - High delta V operation (VIN = 28V and -- VOUT = 0.6V)
  - Any Capacitor™ stable
- 4.5V to 28V Input Voltage
- Adjustable Output Voltage from 0.6V to 24V
- 200 kHz to 750 kHz Programmable Switching –- Frequency
- Hyper Speed Control® (MIC2126)
- Enable Input and Power Good Output
- Built-in 5V Regulator for Single-Supply Operation
- Programmable current limit and “hiccup” mode -- short-circuit protection
- 7 ms internal soft-start, internal compensation, -- and thermal shutdown
- Supports Safe Start-Up into a Pre-biased Output
- –40°C to +125°C Junction Temperature Range
- Available in 16-pin, 3 mm × 3 mm QFN Package

Typical Application Circuit

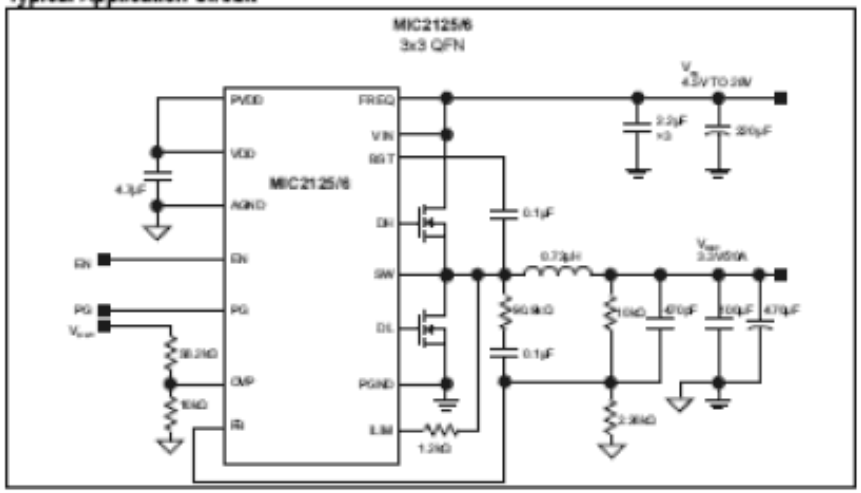

<< BACK

MIC2124

Synch. Current Mode Buck Controller w/ Adaptive On-Time Control

Online Datasheet

Features:

- +3V to +18V input voltage
- 25A output current capability
- Any Capacitor™ stable:
  - Zero ESR to high ESR
- Output down to 0.8V with ±1% FB accuracy
- Up to 94% efficiency
- 300kHz switching frequency
- All N-Channel MOSFET design
- Shutdown feature with EN/COMP
- No current-sense resistor needed
- Internal 4ms digital soft-start
- Cycle-by-Cycle fold-back current-limit protection
- 10-pin MSOP package
- -40ºC to +125ºC junction temperature range

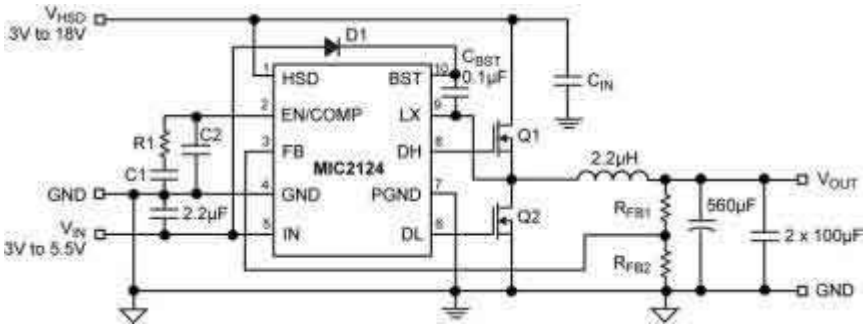

<< BACK

MIC2168/A

1MHz PWM Synchronous Buck Control IC

Online Datasheet

Features:

- 3V to 14.5V input voltage range
- Adjustable output voltage down to 0.8V
- Up to 95% efficiency
- 1MHz PWM operation
- No external current sense resistor
- Adaptive gate drive increases efficiency
- Adjustable current-limit senses high-side –
  - N-Channel MOSFET current
- Ultra-fast response with hysteretic transient –
  - recovery mode
- Overvoltage protection protects the load in –
  - fault conditions
- Dual mode current limit speeds up recovery time
- "Hiccup" mode short-circuit protection Internal soft-start
- Dual function COMP and EN pin allows low-power shutdown
- Small size MSOP 10-lead package

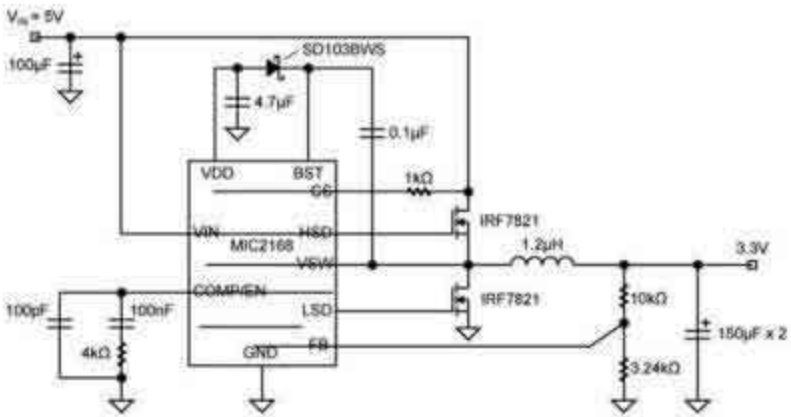

<< BACK

MIC2169/A/B

500kHz PWM Synchronous Buck Control IC

Online Datasheet

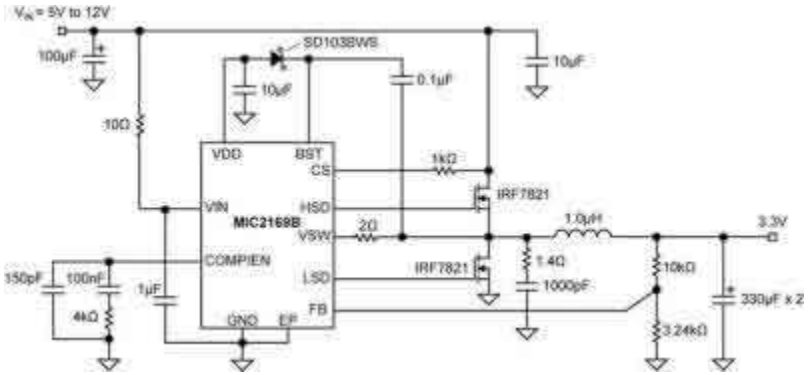

Features:

- 3V to 14.5V input voltage range
- Adjustable output voltage down to 0.8V
- 500kHz PWM operation
- Up to 95% efficiency
- Output pre-biased protection
- Built-in 2.2ω drivers to drive two N-Channel –
  - MOSFETs
- Adaptive gate drive increases efficiency
- Simple, externally-compensated voltage-mode –
  - PWM control
- Short minimum ON time of 30ns allowing very low duty cycle
- Fast transient response
- Adjustable current limit senses high-side N-Channel MOSFET current
- Hiccup mode short-circuit protection
- Dual function COMP and EN pin allows low-power shutdown
- Available in a small size 10-pin MSOP and 10-pin MSOP ePad package

<< BACK

MIC2111

Single-Phase Multi-Mode Step-Down PWM Controller

Online Datasheet

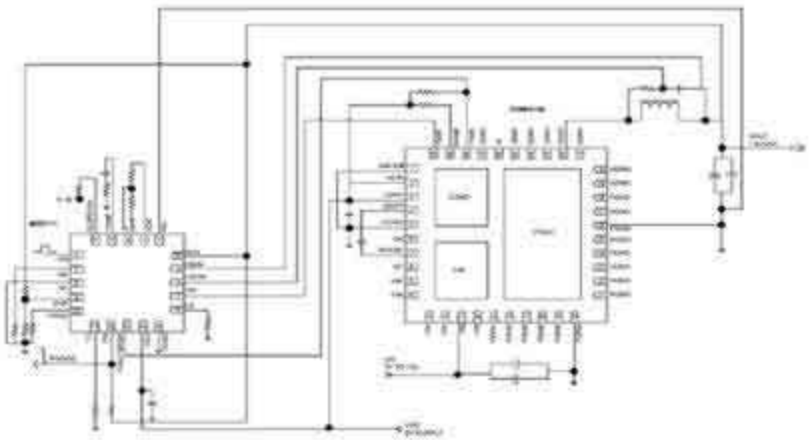

Features:

- Single 3.3V or 5V supply
- Supports load currents more than 50A
- Programmable valley-current/voltage-mode –
  - PWM architecture
- 3.3V logic PWM outputs compatible with power –
  - stage modules and DrMOS modules
- Programmable switching frequency: 200kHz to –
  - 2MHz
- Differential remote sensing for output voltage –
  - and inductor current
- 0.6V reference voltage with total ±1% accuracy for output
- Adjustable soft-start/soft-stop and pre-biased safe startup
- Programmable OCP, OVP, OTP, and dedicated FAULT –
  - pin for system safe startup/stop
- -40ºC to +125ºC junction temperature range
- Available in 20-pin 3mm × 3mm TQFN package

<< BACK

MIC24420/1

2.5A Dual Output PWM Synchronous Buck Regulator

Online Datasheet

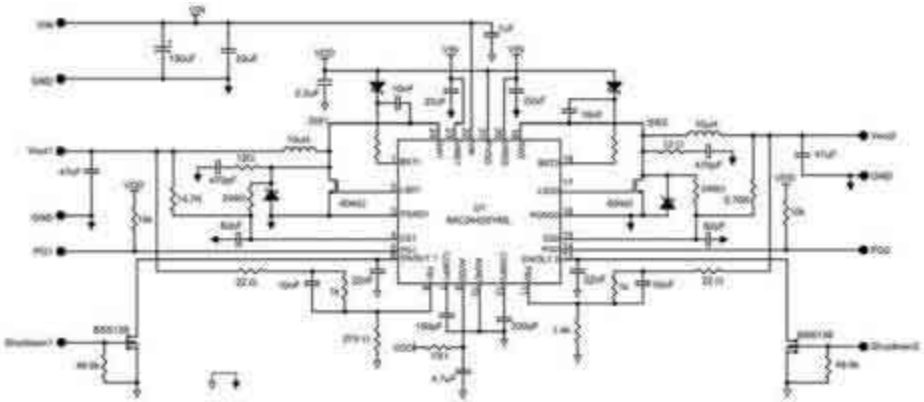

Features:

- 4.5V to 15V input voltage range
- Adjustable output voltages down to 0.7V
- 2.5A per channel
- 180° out of phase operation
- Pre-biased output startup capability
- Low-side driver for synchronous operation
- 2% output voltage accuracy (over –
  - temperature)
- 500kHz (MIC24421) and 1MHz –
  - (MIC24420) switching frequency
- Programmable max current limit
- Ramp Control™ provides soft-start
- Low-side current sensing allows very low duty-cycle
- Works with ceramic output capacitors
- 24-pin 4mm x 4mm MLF® package
- Junction temperature range of -40ºC to +125ºC

<< BACK

MIC4782

1.8MHz Dual 2A Integrated Switch

Online Datasheet

Features:

- 3.0V to 6.0V supply voltage
- 1.8MHz PWM mode
- 2A dual output
- Greater than 92% efficiency
- 100% maximum duty cycle
- Adjustable output voltage option down –
  - to 0.6V
- Ultra-fast transient response
- Ultra-small external components
- Stable with a 1µH inductor and a 4.7µF output capacitor
- Fully integrated 2A MOSFET switches
- Micro-power shutdown
- Thermal shutdown and current limit protection
- Available in a 3mm × 3mm 16-pin MLF®
- -40ºC to +125ºC junction temperature range

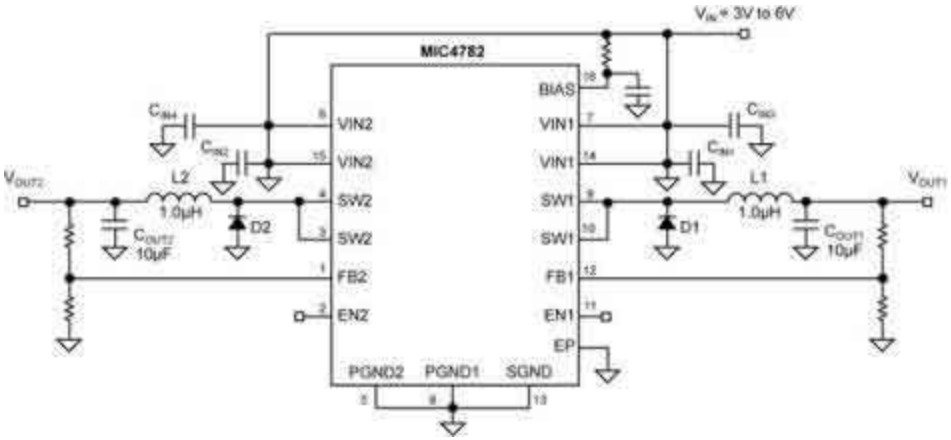

<< BACK

MIC23450

3MHz PWM 2A Triple Buck Regulator w/ HyperLight Load® & Power Good

Online Datasheet

Features:

- Input voltage: 2.7V to 5.5V
- Three independent 2A outputs
- Up to 93% peak efficiency
- 81% typical efficiency at 1mA
- 23µA typical quiescent current (per channel)
- 3MHz PWM operation in continuous mode
- Low voltage output ripple:
  - 30mVpp ripple in HyperLight Load® mode
  - 5mV output voltage ripple in full PWM mode
- Fully integrated MOSFET switches
- 0.01µA shutdown current (per channel)
- Thermal-shutdown and current-limit protection
- Output voltage as low as 1V
- 32-pin 5mm x 5mm QFN
- -40ºC to +125ºC junction temperature range

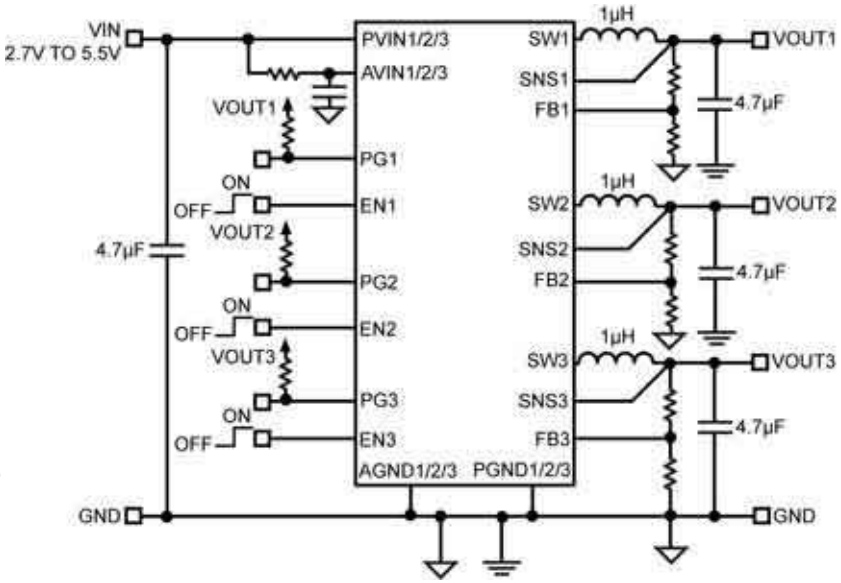

<< BACK

MIC23451

3MHz 2A Triple Synch. Buck Regulator w/ HyperLight Load® & Power Good

Online Datasheet

Features:

- Input voltage: 2.7V to 5.5V
- Three independent 2A outputs
- Up to 93% peak efficiency
- 81% typical efficiency at 1mA
- 24µA typical quiescent current (per channel)
- 3MHz PWM operation in continuous mode
- Ultra-fast transient response
- Low voltage output ripple:
  - 30mVpp ripple in HyperLight Load® mode
  - 5mV output voltage ripple in full PWM mode
- Fully integrated MOSFET switches
- Thermal shutdown and current limit protection
- Output voltage as low as 1.0V
- 26-pin 4mm x 4mm QFN package
- Junction temperature range of -40ºC to +125ºC

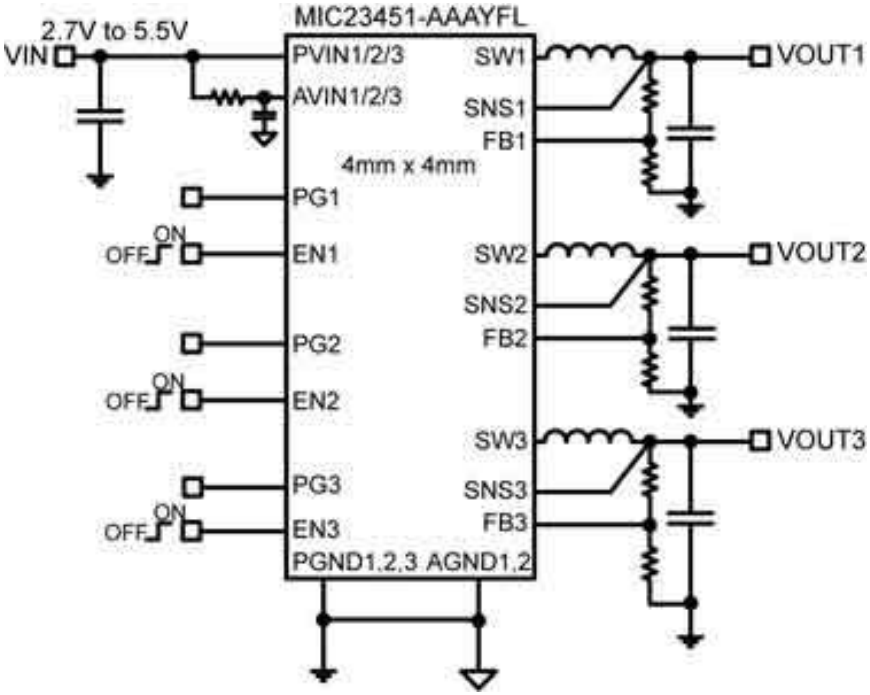

<< BACK

MIC23158/9

3MHz PWM Dual 2A Buck Regulator w/ HyperLight Load® & Power Good

Online Datasheet

Features:

- Input voltage: 2.7V to 5.5V
- Output voltage: Adjustable (down to 1.0V)
- Two independent 2A outputs
- Up to 94% peak efficiency
- 83% typical efficiency at 1mA
- Two independent Power Good Indicators
- Independent programmable Soft Start
- 45µA typical quiescent current
- 3MHz PWM operation in continuous conduction – mode
- Fully integrated MOSFET switches
- 0.01µA shutdown current
- Thermal shutdown and current limit protection
- 20-pin 3mm x 4mm MLF® package
- Junction temperature range of -40ºC to +125ºC

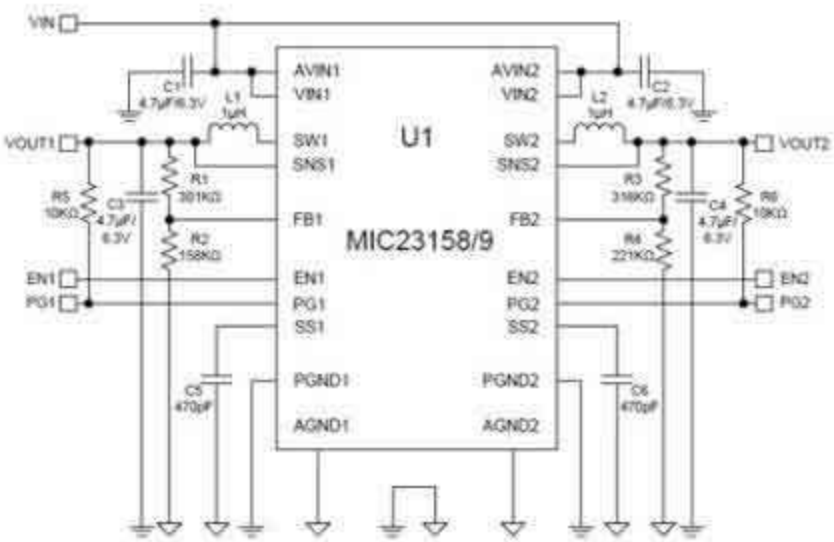

<< BACK

MIC4744

4MHz Dual 2A Integrated Switch Buck Regulator

Online Datasheet

Features:

- 2.9V to 5.5V supply voltage
- 4MHz PWM mode
- 2A Dual output
- Greater than 90% efficiency
- 100% maximum duty cycle
- Output voltage adjustable down to –
  - 0.6V
- Ultra-fast transient response
- Ultra-small external components –
  - Stable with a 0.47µH inductor –
  - and a 10µF output capacitor
- Fully integrated 2A MOSFET switches
- Micro-power shutdown
- Thermal shutdown and current limit protection
- Available in 3mm x 3mm 16-pin MLF® and –
  - 16-pin TSSOP packages
- -40ºC to +125ºC junction temperature range

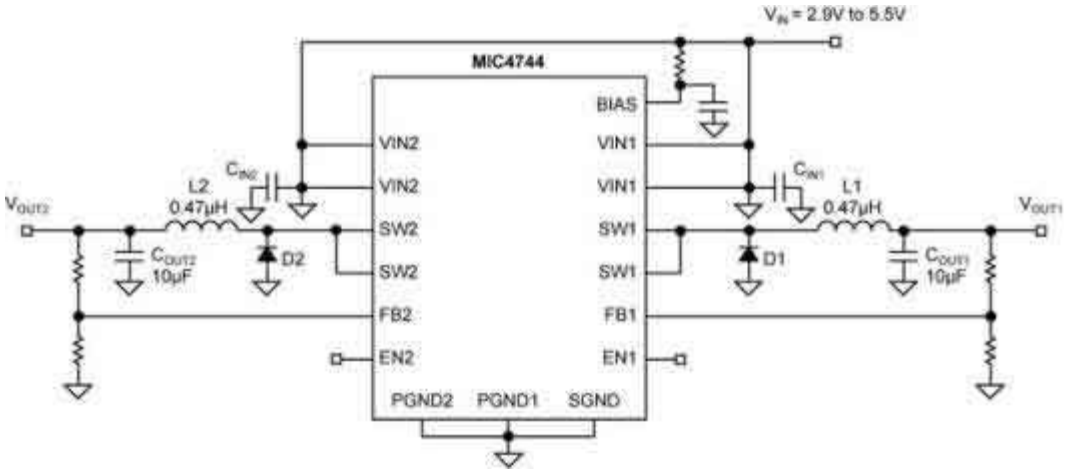

<< BACK

MIC4742

2MHz Dual 2A Integrated Switch Buck Regulator

Online Datasheet

Features:

- 2.9V to 5.5V supply voltage
- 2MHz PWM mode
- 2A Dual output
- Greater than 92% efficiency
- 100% maximum duty cycle
- Adjustable output voltage option –
  - down to 0.6V
- Ultra-fast transient response
- Ultra-small external components –
  - Stable with a 1µH inductor and –
  - a 4.7µF output capacitor
- Fully integrated 2A MOSFET switches
- Micro-power shutdown
- Thermal shutdown and current limit protection
- Available in a 3mm x 3mm 16-pin MLF® and 16-pin TSSOP
- -40ºC to +125ºC junction temperature range

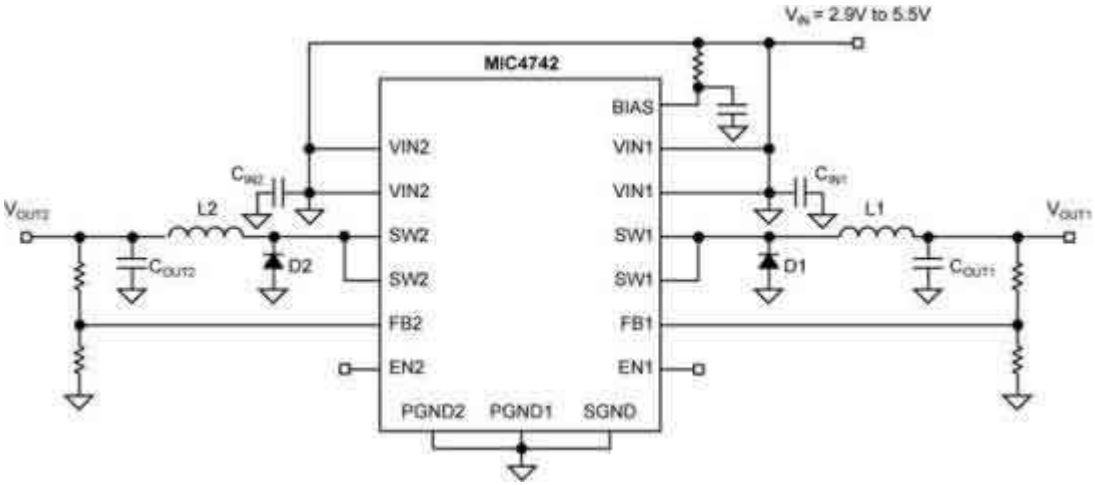

<< BACK

MIC2238

2MHz Dual 2A Integrated Switch Buck Regulator

Online Datasheet

Features:

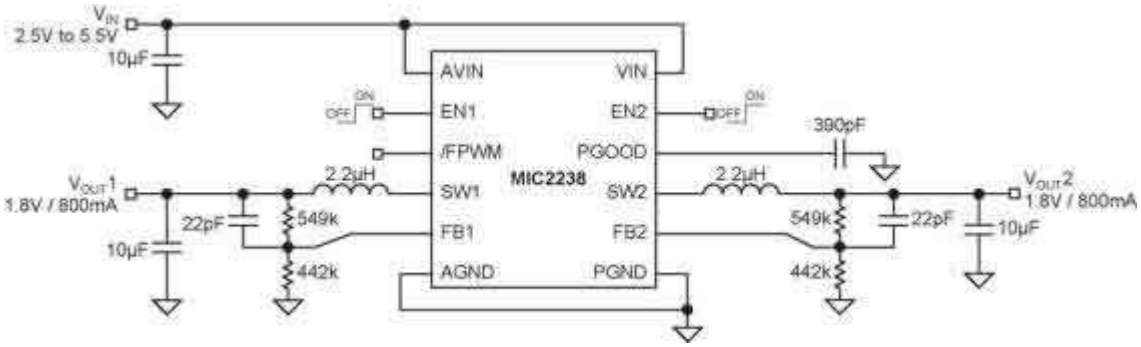

- Input voltage range: 2.5V to 5.5V
- 28µA quiescent current
- Fixed output voltage versions
- Adjustable version down to 0.8V
- Low noise 2.5MHz PWM –
  - operation
- Dual output voltages running –
  - out of phase
- 800mA output current capability for each channel
- Stable with 2.2µH inductor, 2.2µF ceramic cap
- Automatic switching into light load mode of operation
- /FPWM pin allows low noise all-PWM mode operation
- Power good output with internal 5µA current source –
  - allows sequencing with programmable delay time
- Current limit protection
- Pb-Free 3mm x 3mm MLF®-12L package

<< BACK

MIC2230

Dual Synchronous 800mA/800mA Step-Down Regulator

Online Datasheet

Features:

- High Efficiency: Over 96%
- Ultra-low quiescent current: Only 28µA
- Ultra-low shutdown current less than 1µA
- Fast transient performance
- 2.5MHz PWM operation
- High output current capability per channel: -
  - 800mA
- No Schottky Diodes Required
- Stable with 2.2µH inductor, 2.2µF ceramic cap
- Adjustable output voltage down to 0.8V
- Built-in soft-start circuitry
- /FPWM pin allows low noise all-PWM mode operation
- Power good output with internal 5µA current source –
  - allows sequencing with programmable delay time
- Small Thermally Enhanced 3mm × 3mm MLF® package

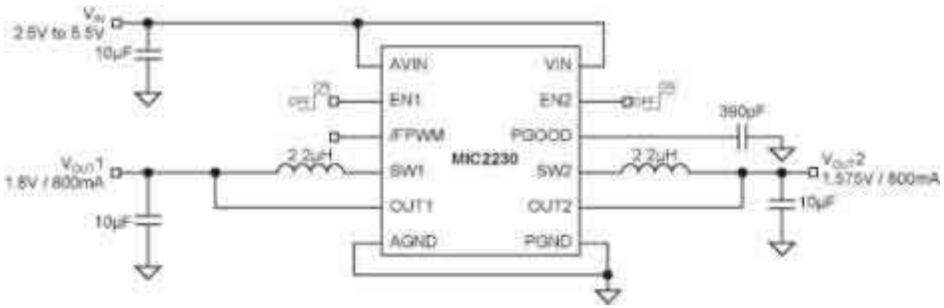

<< BACK

MIC23254

4MHz Dual 400mA Synch. Buck w/ Low Input Voltage & HyperLight Load™

Online Datasheet

Features:

- Low input voltage range: 2.5V to 5.5V
- Dual output current 400mA/400mA
- 33µA dual quiescent current
- 1µH inductor with a 4.7µF capacitor
- 4MHz in PWM operation
- Ultra-fast transient response
- Low voltage output ripple
- Up to 94% peak efficiency and 85% -
  - efficiency at 1mA
- 20mVpp in HyperLight Load® mode
- 3mV output voltage ripple in full PWM mode
- 0.01µA shutdown current
- Fixed output:10-pin 2mm x 2mm Thin MLF®
- -40ºC to +125ºC junction temperature range

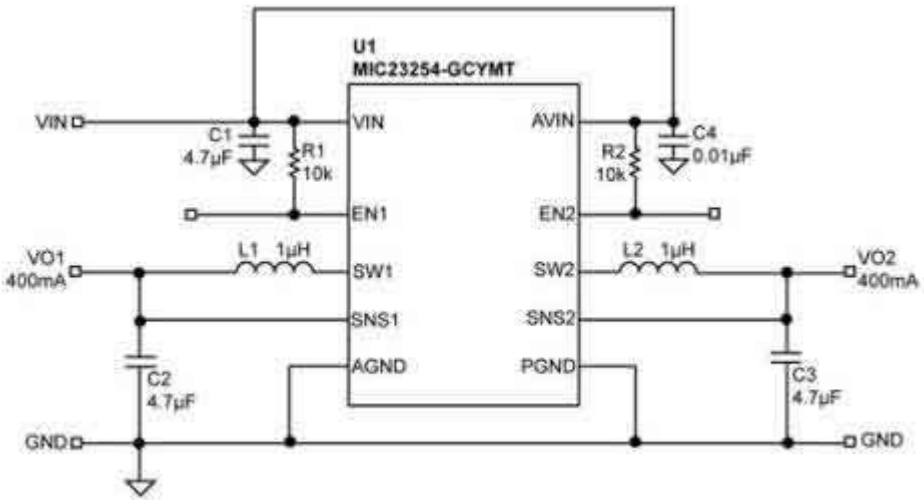

<< BACK

MIC23250

4MHz Dual 400mA Synch. Buck Regulator w/ HyperLight Load™

Online Datasheet

Features:

- Input voltage range: 2.7V to 5.5V
- Dual output current 400mA/400mA
- 33µA dual quiescent current
- 1µH inductor with a 4.7µF capacitor
- 4MHz in PWM operation
- Ultra fast transient response
- Low voltage output ripple
- 20mVpp in HyperLight Load® mode
- Up to 94% peak efficiency and 85% efficiency –
  - at 1mA
- 3mV output voltage ripple in full PWM mode
- 0.01µA shutdown current
- Fixed output:10-pin 2mm x 2mm Thin MLF®
- Adjustable output:12-pin 2.5mm x 2.5mm Thin MLF®
- -40ºC to +125ºC junction temperature range

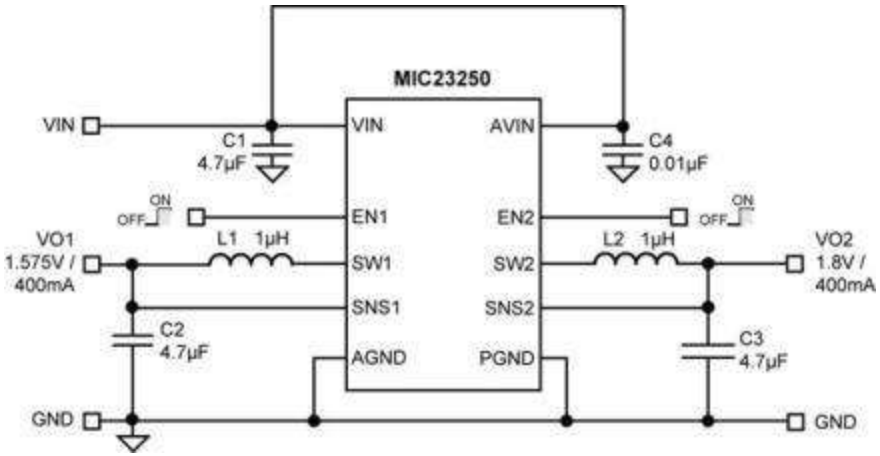

<< BACK

MIC2155

2-Phase PWM Synchronous Buck Control IC

Online Datasheet

Features:

- Synchronous Buck Control ICs with outputs –
  - switching 180° out-of-phase
- Remote sensing with internal differential –
  - amplifier
- 4.5V to 14.5V input voltage range
- Adjustable output voltages down to 0.7V
- Starts up into a pre-biased output
- 500kHz PWM operation (MIC2155)
- Adaptive gate drive allows efficiencies over –
  - 95%
- Senses low-side MOSFET current
- Internal drivers allow 25A per phase
- Dual enables with micro-power shutdown –
  - and UVLO
- Single output high current capability with –
  - master-slave current sharing
- Small footprint 32-pin 5mm x 5mm MLF®
- Junction temperature range of -40ºC to +125ºC

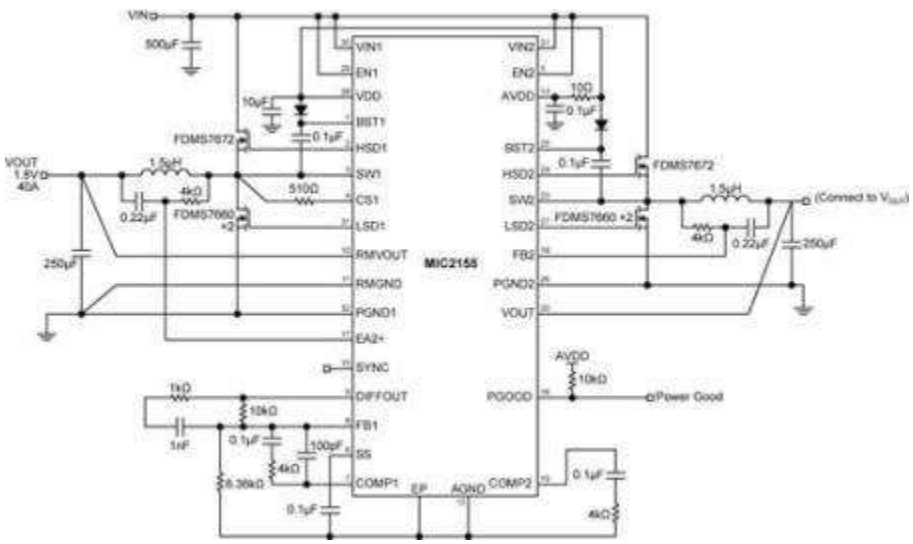

<< BACK

MIC2150/1

2-Phase Dual Output PWM Synch. Buck Control

Online Datasheet

Features:

- Dual Synchronous Buck Control IC with outputs -– switching 180°out-of-phase
- 4.5V to 14.5V input voltage range
- Adjustable output voltages down to 0.7V
- 1% output voltage accuracy
- MIC2150: 500kHz PWM operation
- MIC2151: 300kHz PWM operation
- Adaptive gate drive allows efficiencies over 95%
- Adjustable current limit with no sense resistor –- Senses low-side MOSFET current
- Internal drivers allow 20A per phase
- Power Good output allow simple sequencing
- Output over-voltage protection
- Tiny 4mm x 4mm 24-Pin MLF® package
- Junction temperature range of -40ºC to +125ºC

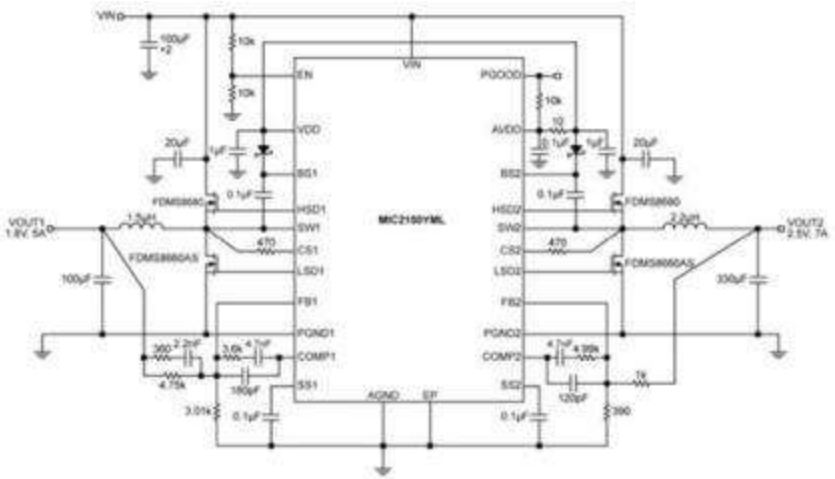

<< BACK

MIC2171

100kHz 2.5A Switching Regulator

Online Datasheet

Features:

- 2.5A, 65V internal switch rating
- 3V to 40V input voltage range
- Current-mode operation, 2.5A peak
- Internal cycle-by-cycle current limit
- Twice the frequency of the LM2577
- Low external parts count
- Operates in most switching topologies
- 7mA quiescent current (operating)
- Fits LT1171/LM2577 TO-220 and TO-263 –
  - sockets

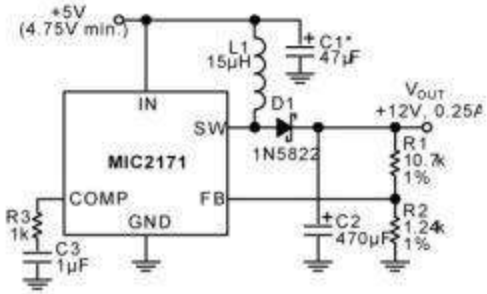

* Locate near MIC2171 when supply leads > 2"

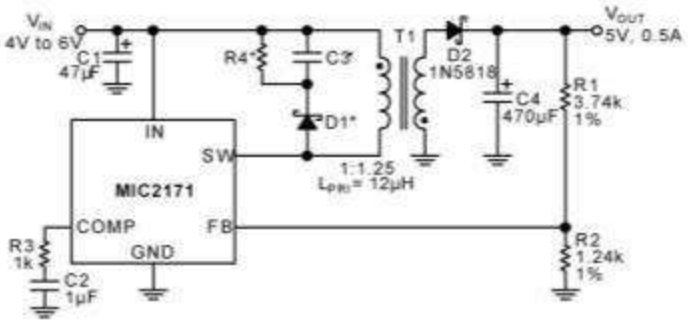

* Optional voltage clipper (may be req'd if T1 leakage inductance too high)

<< BACK

MIC2172

100kHz 2.5A Switching Regulator

Online Datasheet

Features:

- 1.25A, 65V internal switch rating
- 3V to 40V input voltage range
- Current-mode operation
- Thermal shutdown
- Low external parts count
- Internal cycle-by-cycle current limit
- Operates in most switching topologies
- 7mA quiescent current (operating)
- <1µA quiescent current, shutdown mode –
  - (MIC3172)
- TTL shutdown compatibility (MIC3172)
- External frequency synchronization (MIC2172)
- External frequency trim (MIC2172)
- Fits most LT1172 sockets (see applications info)

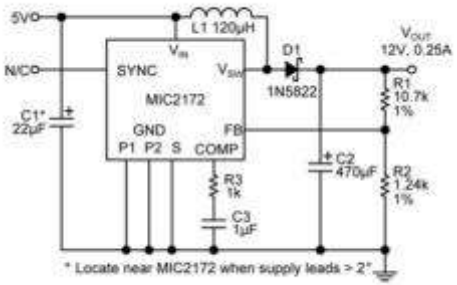

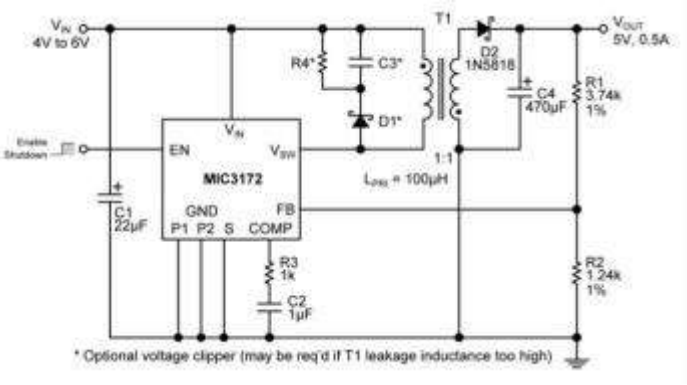

<< BACK

MIC3172

100kHz 1.25A Switching Regulators

Online Datasheet

Features:

- 1.25A, 65V internal switch rating
- 3V to 40V input voltage range
- Current-mode operation
- Internal cycle-by-cycle current limit
- Thermal shutdown
- Low external parts count
- Operates in most switching topologies
- 7mA quiescent current (operating)
- <1µA quiescent current, shutdown mode –
  - (MIC3172)
- TTL shutdown compatibility (MIC3172)
- External frequency synchronization (MIC2172)
- External frequency trim (MIC2172)
- Fits most LT1172 sockets (see applications info)

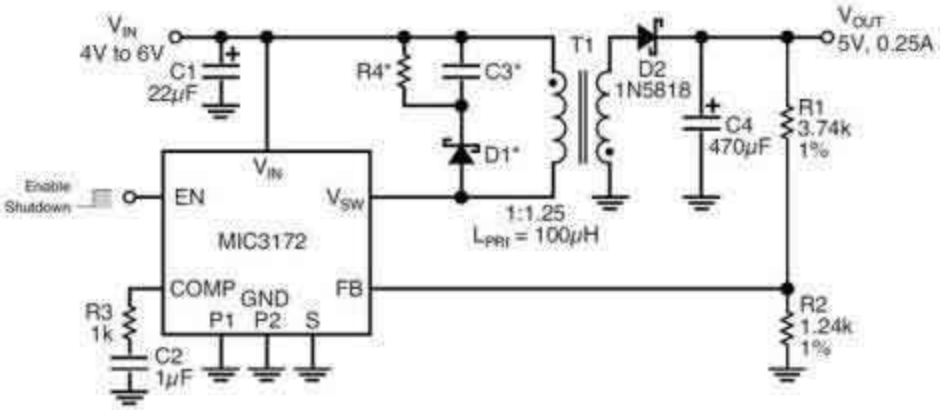

<< BACK

MIC2601/2

1.2A Wide Input Range with Integrated Switch Boost Regulator

Online Datasheet

Features:

- Wide input voltage range: 4.5V to 20V
- Output voltage adjustable to 40V
- 1.2A switch current
- MIC2601 operates at 1.2MHz
- MIC2602 operates at 2MHz
- Stable with small size ceramic capacitors
- High efficiency
- Programmable soft start
- <10 µA shutdown current
- UVLO
- Output over-voltage protection
- Over temperature shutdown
- 8-pin 2mm x 2mm MLF® package
- -40ºC to +125ºC junction temperature range

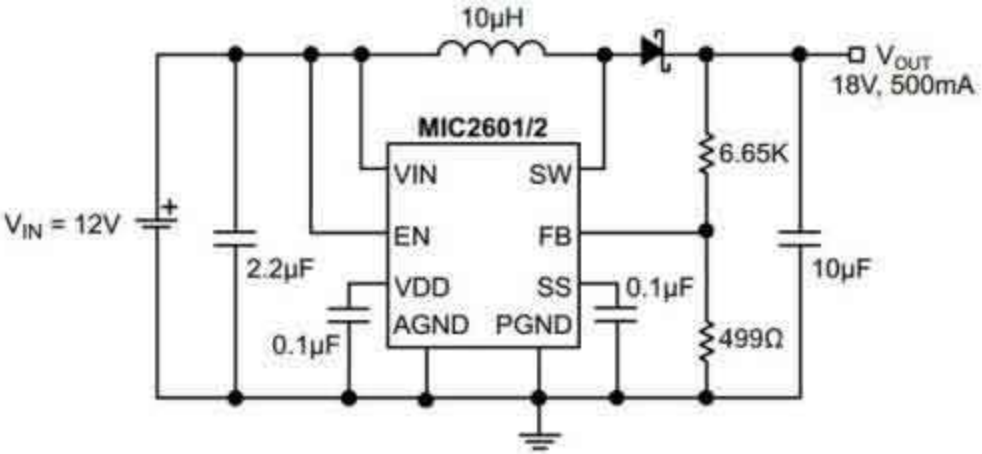

<< BACK

MIC2605/6

0.5A Wide Input Range Boost Regulator w/ Switch & Schottky Diode

Online Datasheet

Features:

- Wide input voltage range: 4.5V to 20V
- Output voltage adjustable to 40V
- 0.5A switch current and Schottky diode
- MIC2605 operates at 1.2MHz
- MIC2606 operates at 2MHz
- Programmable soft start
- Stable with small size ceramic capacitors
- High efficiency
- Low input and output ripple
- <10µA shutdown current
- UVLO
- Output over-voltage and over-temperature protection
- 8-pin 2mm x 2mm MLF® package
- -40ºC to +125ºC junction temperature range

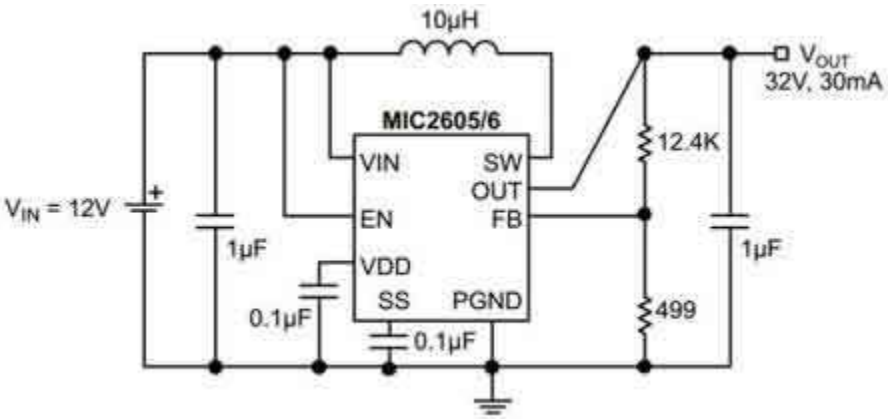

<< BACK

MIC2145

High Efficiency 2.5W Boost Converter

Online Datasheet

Features:

- 2.4V to 16V input voltage
- Output adjustable to 16V
- Programmable peak current limit
- Soft start
- Up to 450kHz switching frequency
- 0.5µA shutdown current
- 200µA quiescent current
- Capable of 5V/500mA output with 3.3V input
- Achieves over 85% efficiency
- Implements low power boost, SEPIC, and –
  - flyback topologies
- MSOP-8 and 3mm x 3mm MLF®-10L

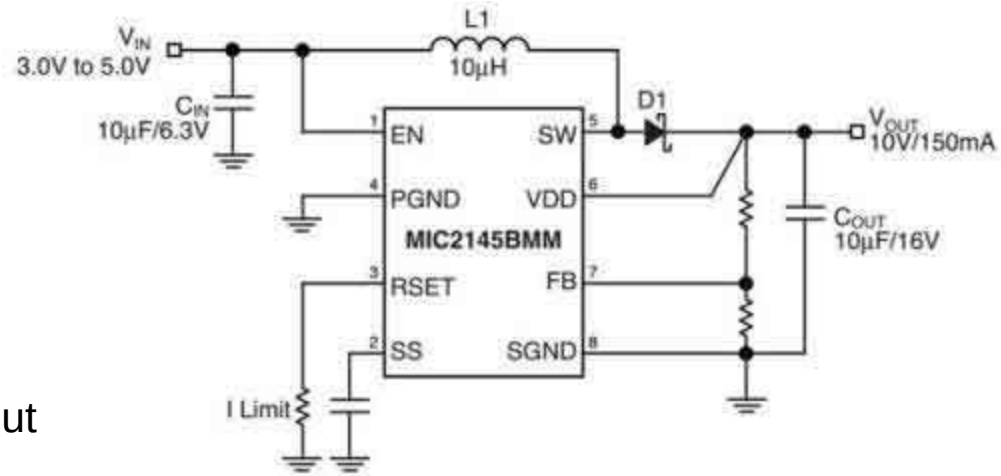

<< BACK

MIC2570

Micropower Boost Converter

Online Datasheet

Features:

- Operates from a two-cell supply:
  - 1.3V to 15V operation
- 130µA typical quiescent current
- Complete regulator fits 0.6 in² area
- 2.85V/3.3V/5V selectable output voltage –
  - (MIC2570-1)
- Adjustable output up to 36V (MIC2570-2)
- 1A current limited pass element
- Frequency synchronization input
- 8-lead SOIC package

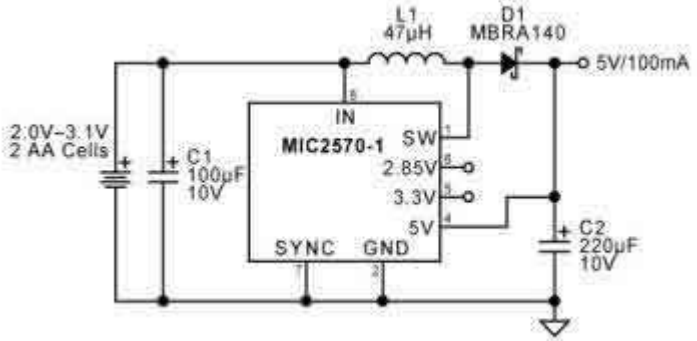

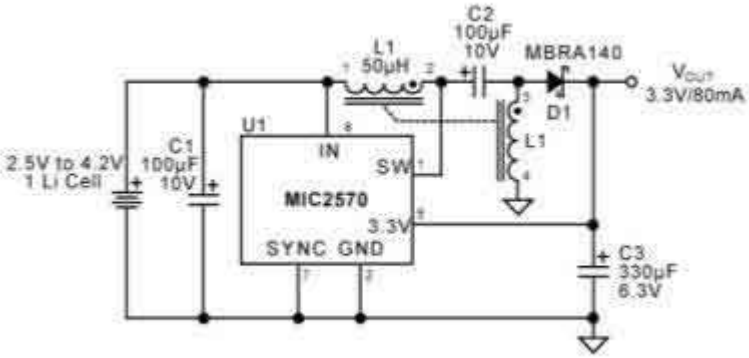

<< BACK

MIC2571

Single-Cell Switching Regulator

Online Datasheet

Features:

- Operates from a single-cell supply:
  - 0.9V to 15V operation
- 120µA typical quiescent current
- Complete regulator fits 0.3 in² area
- 2.85V/3.3V/5V selectable output voltage – - (MIC2571-1)
- Adjustable output up to 36V (MIC2571-2)
- 1A current limited pass element
- Frequency synchronization input
- 8-lead MSOP package

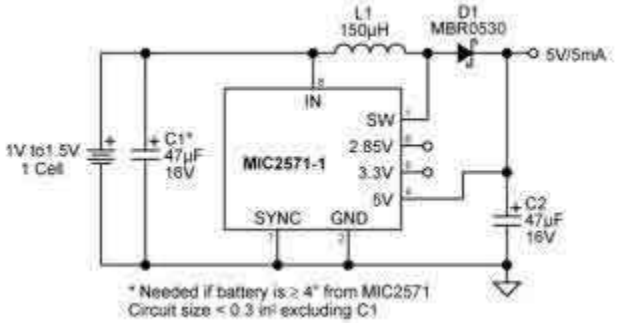

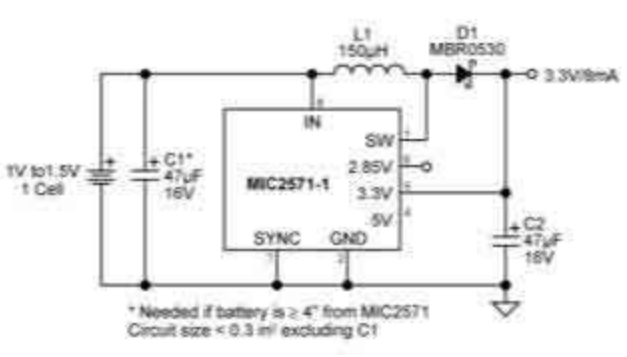

<< BACK

MIC2141

Micropower Boost Converter

Online Datasheet

Features:

- Implements low-power boost, SEPIC, -- or fly-back
- 2.2V to 14V input voltage
- 330kHz switching frequency
- <2µA shutdown current
- 70µA quiescent current
- 1.24V bandgap reference
- Typical output current 1mA to 10mA
- SOT-23-5 package

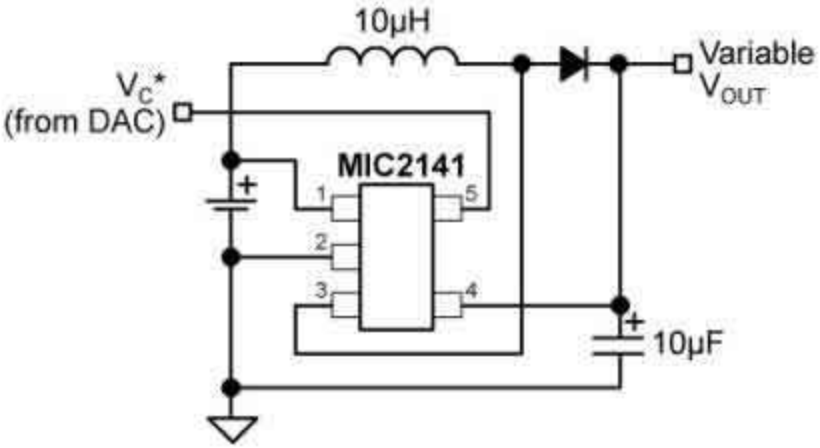

<< BACK

MIC2253

3.5A 1MHz High Efficiency Boost Regulator w/ OVP & Softstart

Online Datasheet

Features:

- 3.5A minimum switch current
- 1.245V ±3% feedback voltage
- 2.5V to 10V input voltage
- Output over-voltage protection (OVP)
- Externally programmable soft-start
- Output voltage up to 30V (max)
- Fixed 1MHz operation
- <1% line regulation
- 0.1µA shutdown current
- Over temperature protection
- Under-voltage lockout (UVLO)
- 12-pin 3mm x 3mm leadless MLF® package
- -40ºC to +125ºC junction temperature range

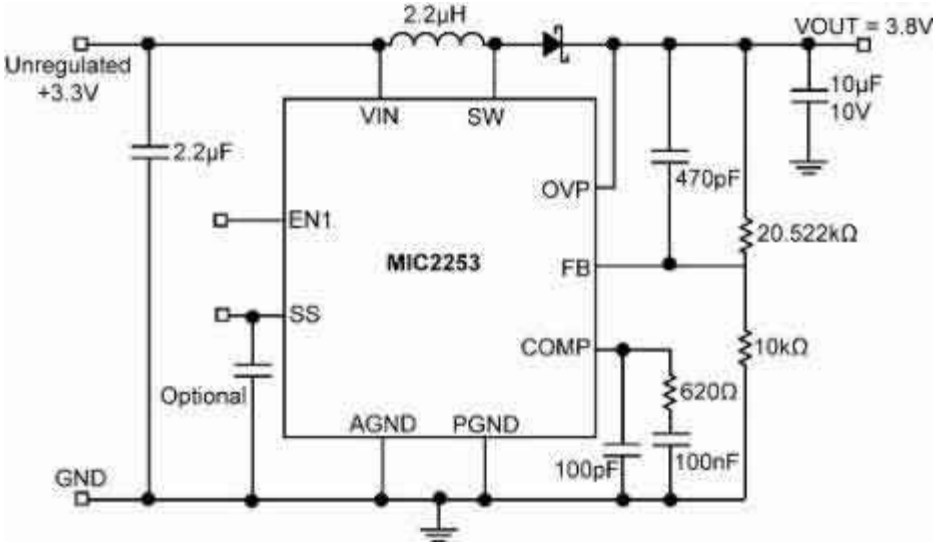

<< BACK

MIC2288

1A 1.2MHz PWM Boost Converter in Small Packaging

Online Datasheet

Features:

- 2.5V to 10V input voltage range
- Output voltage adjustable to 34V
- Over 1A switch current
- 1.2MHz PWM operation
- Stable with ceramic capacitors
- <1% line and load regulation
- Low input and output ripple
- <1µA shutdown current
- Output overvoltage protection (MIC2288BML)
- Over temperature shutdown
- Thin SOT-23-5 package option
- 2mm x 2mm leadless MLF®-8L package option
- -40ºC to +125ºC junction temperature range

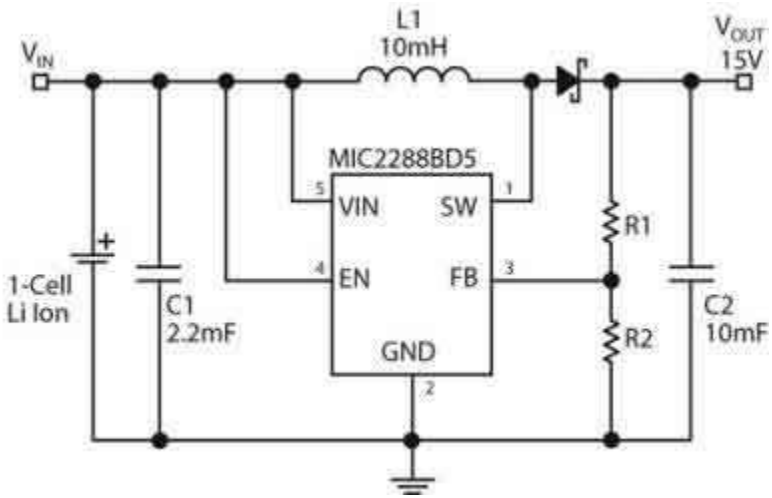

<< BACK

MIC2290

2mm x 2mm PWM Boost Regulator with Internal Schottky Diode

Online Datasheet

Features:

- Internal Schottky diode
- 2.5V to 10V input voltage
- Output voltage adjustable to 34V
- Over 500mA switch current
- 1.2MHz PWM operation
- Stable with ceramic capacitors
- <1% line and load regulation
- Low input and output ripple
- <1µA shutdown current
- UVLO
- Output overvoltage protection
- Over temperature protection
- 2mm x 2mm 8-pin MLF® package
- -40ºC to +125ºC junction temperature range

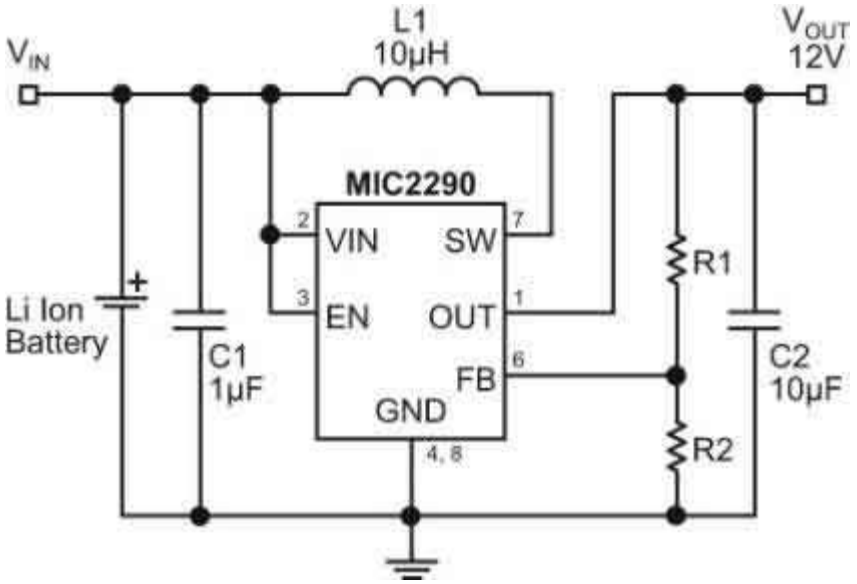

<< BACK

MIC2295

High Power Density 1.2A Boost Regulator

Online Datasheet

Features:

- 2.5V to 10V input voltage range
- Output voltage adjustable to 34V
- 1.2A switch current
- 1.2MHz PWM operation
- Stable with small size ceramic capacitors
- High efficiency
- Low input and output ripple
- <1µA shutdown current
- UVLO
- Output over-voltage protection (MIC2295BML)
- Over temperature shutdown
- Thin SOT23-5 package option
- 2mm x 2mm leadless 8-lead MLF® package option
- -40ºC to +125ºC junction temperature range

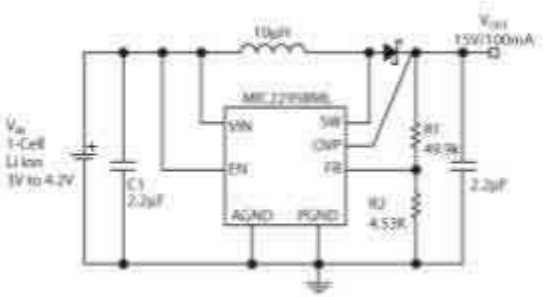

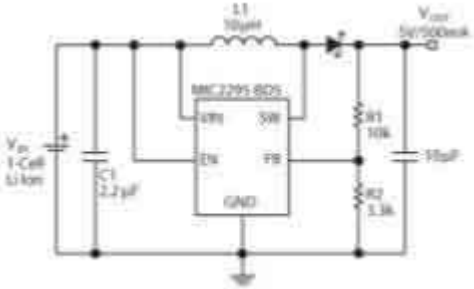

<< BACK

MIC2296

High Power Density 1.2A Boost Regulator

Online Datasheet

Features:

- 2.5V to 10V input voltage range
- Output voltage adjustable to 34V
- 1.2A switch current
- 600kHz PWM operation
- Stable with small size ceramic capacitors
- High efficiency
- Low input and output ripple
- <1 µA shutdown current
- UVLO
- Output over-voltage protection (MIC2296BML)
- Over temperature shutdown
- 2mm x 2mm leadless 8-lead MLF® package option
- -40ºC to +125ºC junction temperature range

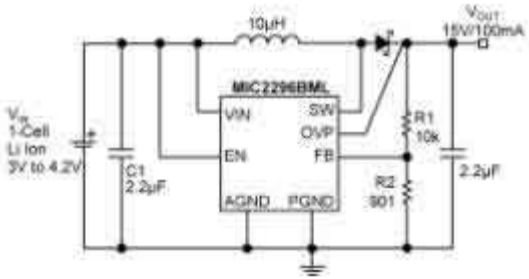

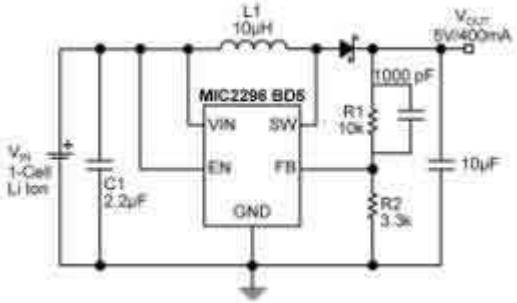

<< BACK

MIC2619

1.2MHz PWM Boost Converter with OVP

Online Datasheet

Features:

- 2.8V to 6.5V input voltage
- 350mA switch current
- Output voltage up to 35V
- 1.2MHz PWM operation
- 1.265V feedback voltage
- Programmable over-voltage protection (OVP)
- <1% line regulation
- <1µA shutdown current
- Over-temperature protection
- Under-voltage lock out (UVLO)
- Low profile Thin SOT-23-6 package
- -40ºC to +125ºC junction temperature range

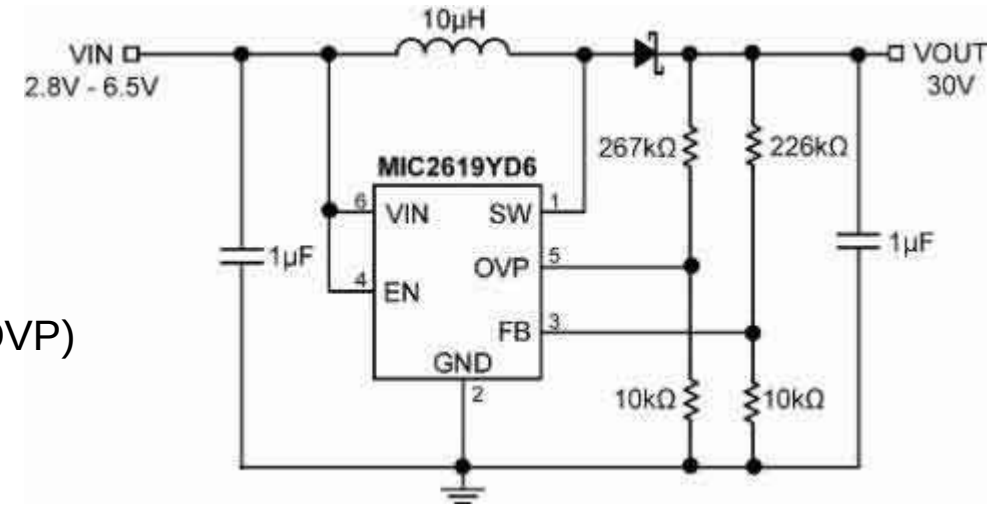

<< BACK

MIC2250

High Efficiency Low EMI Boost Regulator

Online Datasheet

Features:

- Over 80% efficient for a 300:1 load range
- 2.5V to 5.5V input voltage range
- Output voltage adjustable to 32V
- 52µA (typ) quiescent current
- EMI reduction circuitry
- Stable with small ceramic capacitors
- <1µA shutdown current
- Constant peak current control reduces –
  - output ripple
- UVLO and thermal shutdown
- 8-pin 2mm x 2mm leadless MLF® package (MIC2250)
- 5-pin Thin SOT-23 package (MIC2250-1 and -2)
- -40ºC to +125ºC junction temperature range

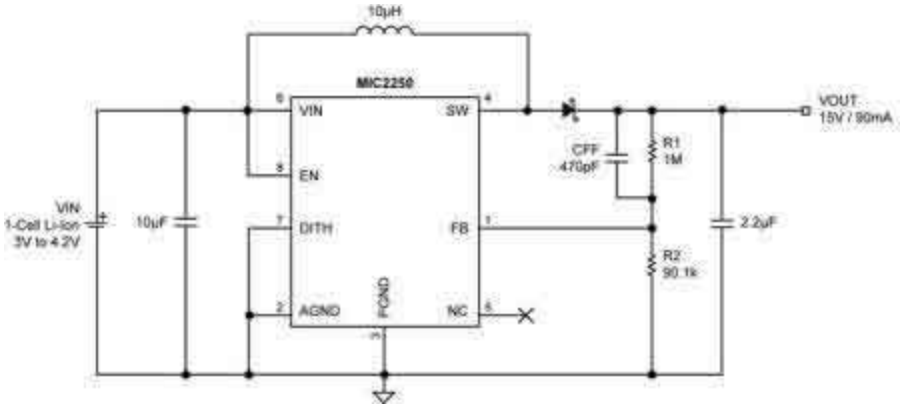

<< BACK

MIC2251

High Efficiency Low EMI Boost Regulator

Online Datasheet

Features:

- Over 80% efficient for a 300:1 load range
- 2.5V to 5.5V input voltage range
- Output voltage adjustable to 37V
- 52µA (typ) quiescent current
- EMI reduction circuitry
- Stable with small ceramic capacitors
- <1µA shutdown current
- UVLO and thermal shutdown
- Constant peak current control reduces –
  - output ripple
- 8-pin 2mm x 2mm leadless MLF® package (MIC2251)
- 5-pin Thin SOT-23 package (MIC2251-1 and -2)
- -40ºC to +125ºC junction temperature range

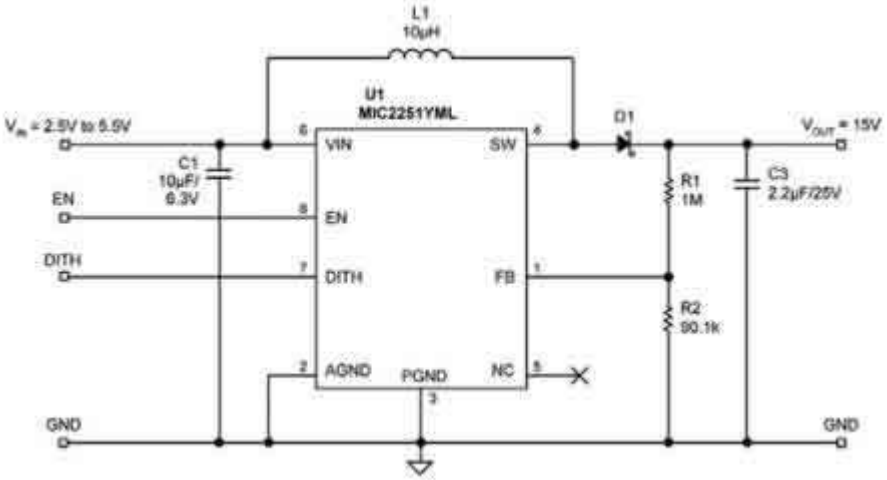

<< BACK

MIC2875

4.8A I_{SW} Synch. Boost Regulator w/ Bi-Directional Load Disconnect

Online Datasheet

Features:

- Input voltage range: 2.5V to 5.5V
- Fully integrated, high-efficiency, 2MHz –
  - synchronous boost regulator
- Bi-directional true load disconnect
- Integrated anti-ringing switch
- Minimum switching frequency of 45kHz
- Up to 95% efficiency
- <1µA shutdown current
- Bypass mode for VIN ≥ VOUT
- Overcurrent protection and thermal shutdown
- Fixed and adjustable output versions
- 8-pin 2mm × 2mm TDFN package

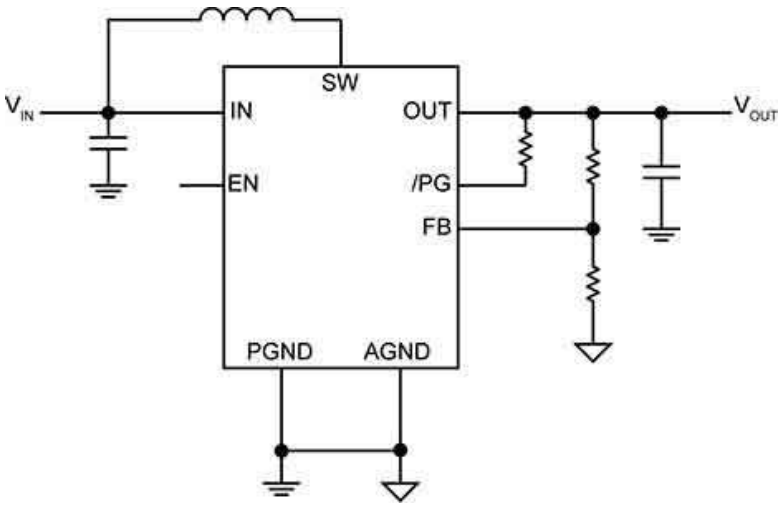

<< BACK

MIC2876

4.8A I_{SW} Synch. Boost Regulator w/ Bi-Directional Load Disconnect

Online Datasheet

Features:

- Input voltage range: 2.5V to 5.5V
- Fully integrated, high-efficiency, 2MHz –
  - synchronous boost regulator
- Bi-directional true load disconnect
- Integrated anti-ringing switch
- Up to 95% efficiency
- <1µA shutdown current
- Bypass mode for VIN ≥ VOUT
- Overcurrent protection and thermal shutdown
- Fixed and adjustable output versions
- 8-pin 2mm × 2mm TDFN package

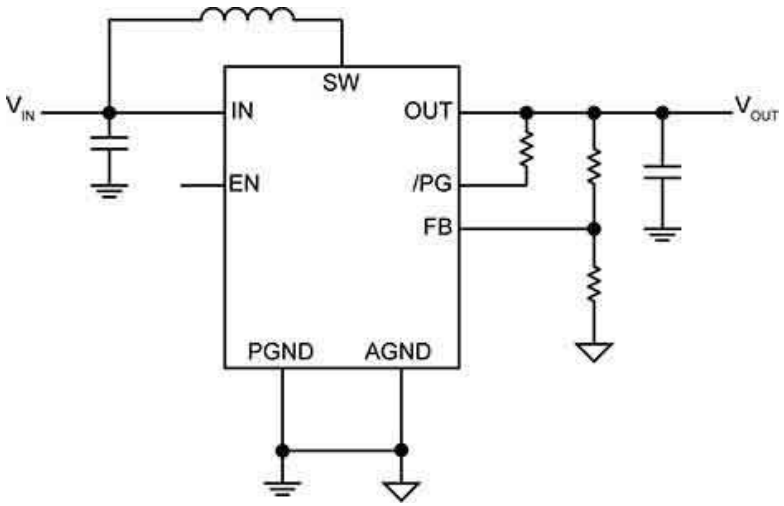

<< BACK

HV9150

High-Voltage Output Hysteretic-Mode Step-Up DC/DC Controller

Online Datasheet

Features:

- Wide output range: 6V to 500V
- Low 2.7V input
- 5W max output power w/external MOSFET
- Built-in charge pump for gate drive voltage
- Fsw programmable: 40kHz to 400kHz
- 4 Duty Cycle Selections: 50% to 87.5%
- FB return ground switch for power savings –
  - applications
- Built-in delay timer for internal protection

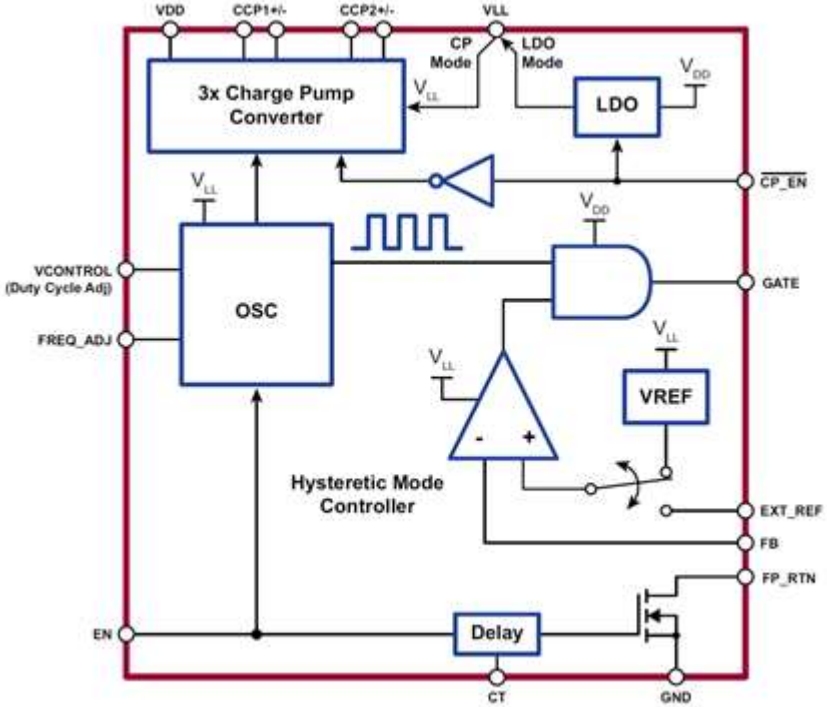

<< BACK

MIC2185

Low Voltage Synchronous Boost PWM Control IC

Online Datasheet

Features:

- Input voltage range: 2.9V to 14V
- 95% efficiency
- Oscillator frequency of 200kHz/400kHz
- Frequency sync to 600kHz
- 0.5µA shutdown current
- Two 5Ω output drivers
- Front edge blanking
- PWM current mode control
- Cycle-by-cycle current limiting
- Frequency fold-back protection
- Adjustable under-voltage lockout
- Precision 1.245V reference output
- 16-pin SOIC narrow body package

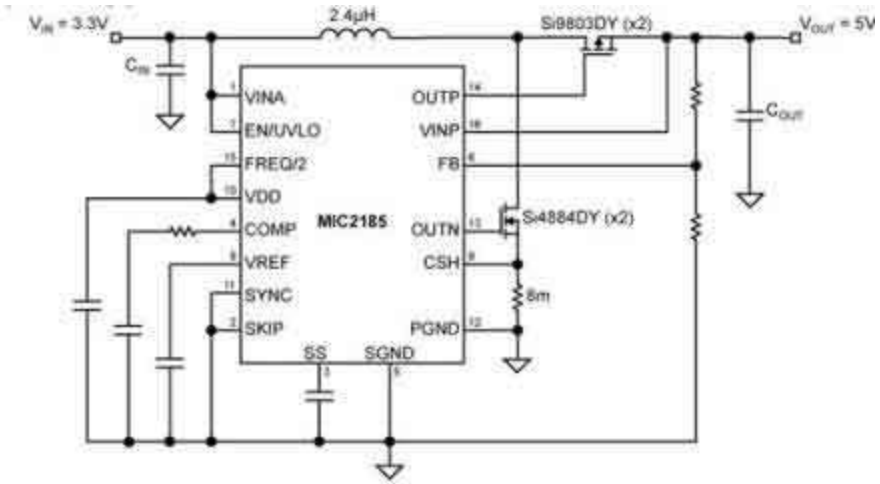

<< BACK

MIC2186

Low Voltage Boost PWM Control IC

Online Datasheet

Features:

- Input voltage range: 2.9V to 14V
- 1.6Ω output driver
- Oscillator frequency of 100kHz/200kHz/400kHz
- Frequency sync to 600kHz
- Front edge blanking
- PWM Current Mode Control
- Selectable light load SKIP mode
- 600µA quiescent current (SKIP-Mode)
- 0.5µA shutdown current
- Cycle-by-cycle current limiting
- Frequency fold-back protection
- Precision 1.245V reference output
- 16-pin SOIC and QSOP package options
- Selectable 50% maximum duty cycle for fly-back applications

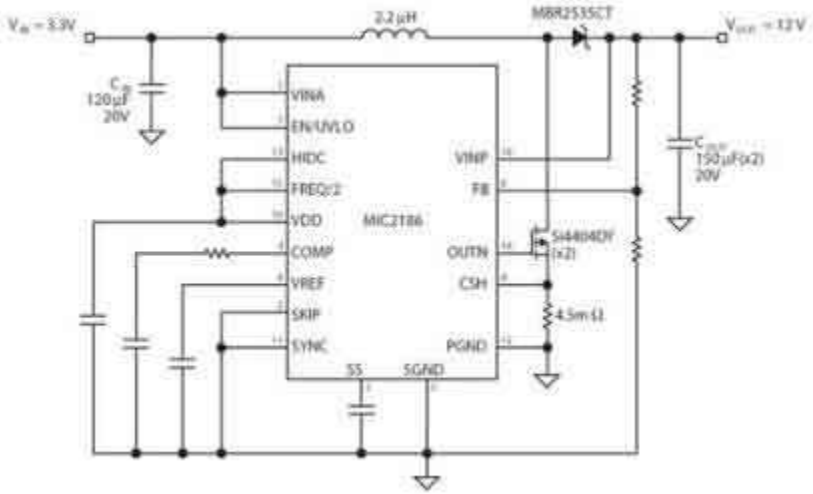

<< BACK

MIC2196

Low Voltage Boost PWM Control IC

Online Datasheet

Features:

- 2.9V to 14V input voltage range
- >90% efficiency
- 2Ω output driver
- 400kHz oscillator frequency
- PWM current mode control
- 0.5µA micro-power shutdown
- Programmable UVLO
- Front edge blanking
- Cycle-by-cycle current limiting
- Frequency foldback short-circuit protection
- 8-pin SOIC package

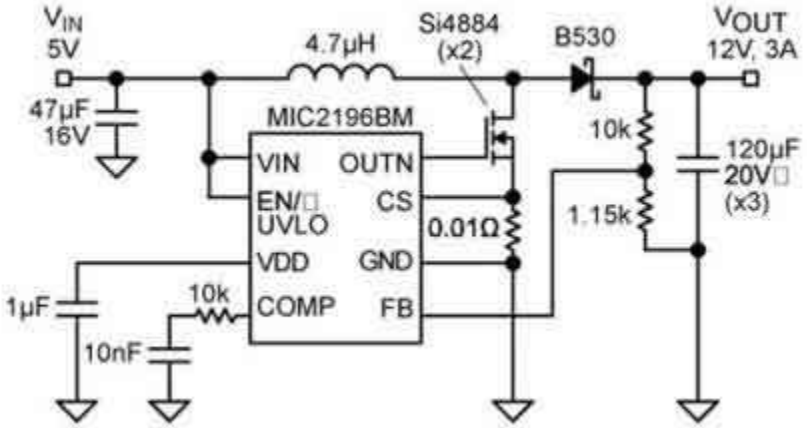

<< BACK

MIC9130

High-Voltage High-Speed Telecom DC-to-DC Controller

Online Datasheet

Features:

- Input voltages up to 180V
- Internal oscillator capable of >2.5MHz operation
- Synchronization capability to 4MHz
- Current sense delay of 34ns
- Minimum pulse width <25ns
- 90% efficiency
- 1.3mA quiescent current
- 1µA shutdown current
- Resistor programmable current sense threshold
- Selectable sort-start retry
- 4Ω sink, 12Ω source output driver
- Programmable under-voltage lockout
- Constant-frequency PWM current-mode control
- 16-pin SOIC and 16-pin QSOP

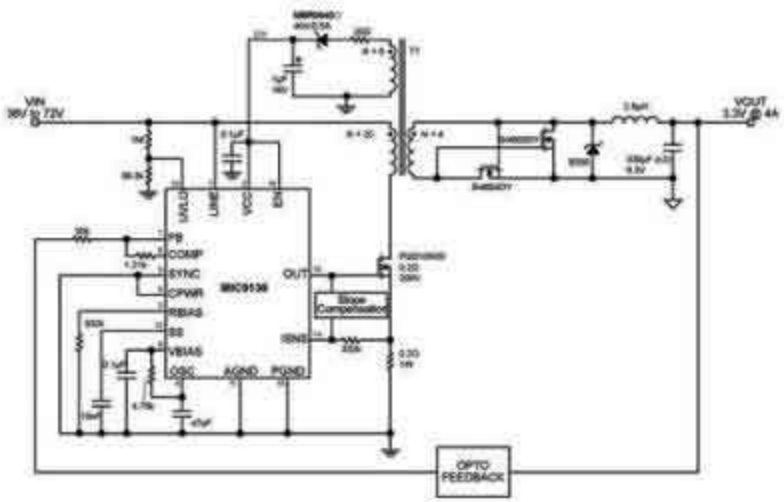

<< BACK

MIC9131

High-Voltage High-Speed Telecom DC-to-DC Controller

Online Datasheet

Features:

- Input voltages up to 180V
- Internal oscillator capable of >2.5MHz operation
- Accurate 75% maximum duty cycle
- Synchronization capability to 6MHz
- Current sense delay of 34ns
- Minimum pulse width of <25ns
- 90% efficiency
- 1.3mA quiescent current
- 1µA shutdown current
- Resistor programmable current sense threshold
- 4Ω sink, 12Ω source output driver
- Programmable under-voltage lockout
- Constant-frequency PWM current-mode control
- 16-pin SOIC and 16-pin QSOP

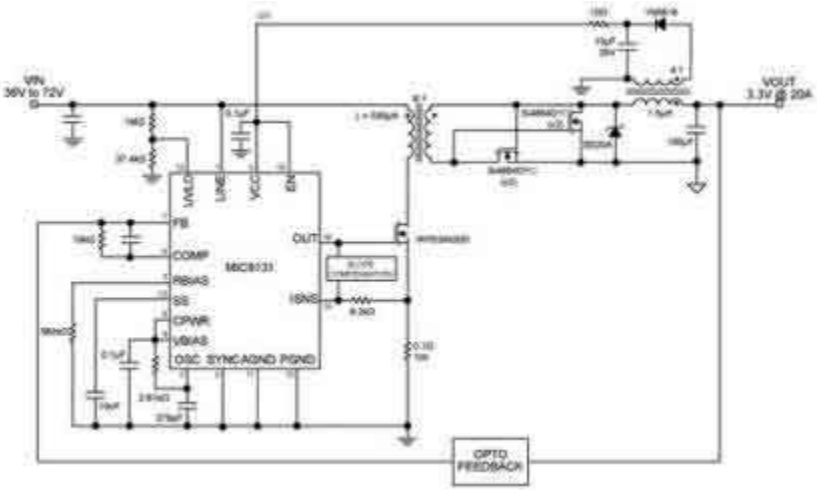

<< BACK

MIC38C42/43/44/45

BiCMOS Current-Mode PWM Controller

Online Datasheet

Features:

- Fast 40ns output rise and 30ns output fall times
- Ultra-low start-up current (50µA typical)
- Low operating current (4mA typical)
- CMOS outputs with rail-to-rail swing
- ≥500kHz current-mode operation
- Trimmed 5V bandgap reference
- Trimmed oscillator discharge current
- -40ºC to +85ºC temperature range meets UC284x – - specifications
- High-performance, low-power BiCMOS Process
- UVLO with hysteresis
- Pin-for-pin compatible with UC3842/3843/3844/3845(A)
- Low cross-conduction currents

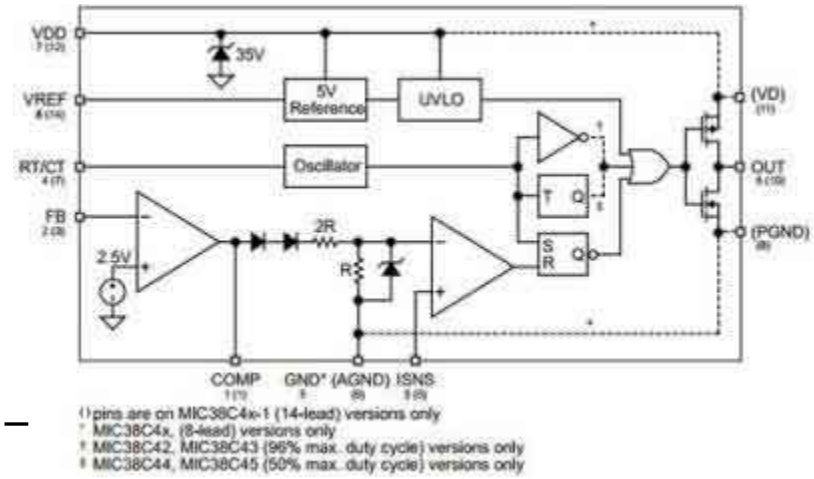

<< BACK

MIC38C42A/43A/44A/45A

BiCMOS Current-Mode PWM Controllers

Online Datasheet

Features:

- Fast 40ns output rise and 30ns output fall times
- -40ºC to +85ºC temperature range meets UC284x – - specifications
- High-performance, low-power BiCMOS Process
- Ultra-low start-up current (100µA typical)
- Low operating current (4mA typical)
- CMOS outputs with rail-to-rail swing
- CMOS outputs with rail-to-rail swing
- Current-mode operation up to 500kHz
- Trimmed 5V bandgap reference
- Pin-for-pin compatible with UC3842/3843/3844/3845(A)
- Trimmed oscillator discharge current
- UVLO with hysteresis
- Low cross-conduction currents

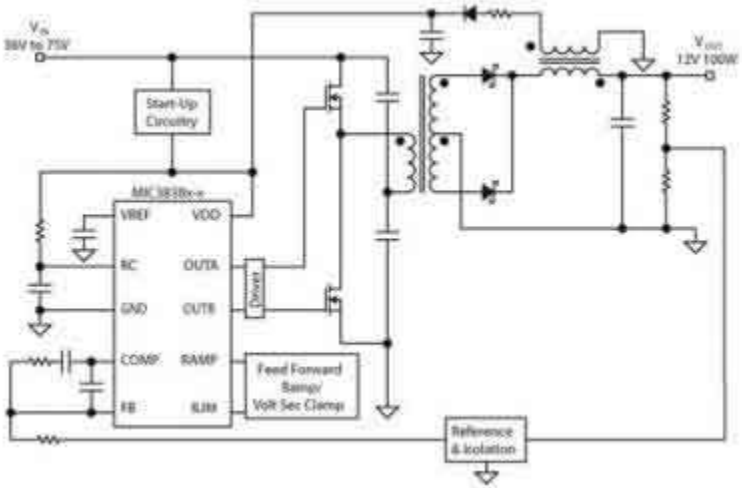

<< BACK

MIC38HC42/43/44/45

BiCMOS 1A Current-Mode PWM Controllers

Online Datasheet

Features:

- Fast 20ns output rise and 15ns output fall times
- High-performance, low-power BiCMOS Process
- Ultra-low start-up current (50µA typical)
- Low operating current (4mA typical)
- High output drive (1A peak current, HC version)
- CMOS outputs with rail-to-rail swing
- Current-mode operation up to 500kHz
- Trimmed 5V bandgap reference
- -40ºC to +85ºC temperature range exceeds –
  - UC284x specifications
- Pin-for-pin compatible with UC3842/3843/3844/3845(A)
- Trimmed oscillator discharge current
- UVLO with hysteresis
- Low cross-conduction currents

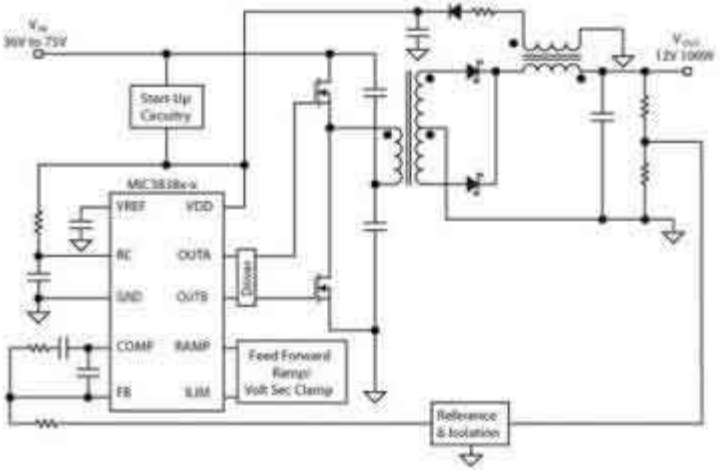

<< BACK

MIC3808/9

Push-Pull PWM Controller

Online Datasheet

Features:

- Dual output drive stages in push-pull configuration
- Leading edge current-sense blanking
- 130µA typical start-up current
- 1mA typical run current
- Operation to 1MHz
- Internal soft start
- On-chip error amplifier with 4MHz gain bandwidth –
  - product
- On-chip VDD clamping
- Output drive stages capable of 500mA peak source –
  - current, 1A peak sink current

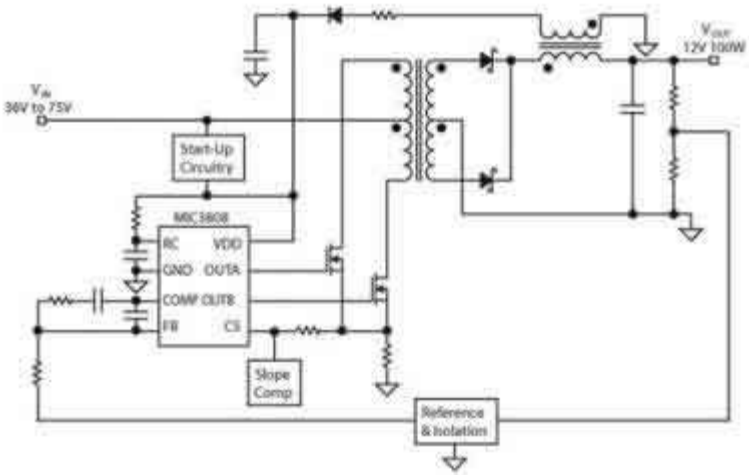

<< BACK

MIC3838/9

Flexible Push-Pull PWM Controller

Online Datasheet

Features:

- Dual output drive stages in push-pull configuration
- Configurable for current-mode or voltage-mode –
  - control
- Easily implements volt-second clamp
- Leading edge current-sense blanking
- 3V reference output available
- 130µA typical start-up current
- 1mA typical run current
- Operation to 1MHz
- On-chip error amplifier with 4MHz gain bandwidth –
  - product
- Internal soft start
- On-chip VDD clamping
- Output drive stages capable of 500mA peak –
  - source current, 1A peak sink current

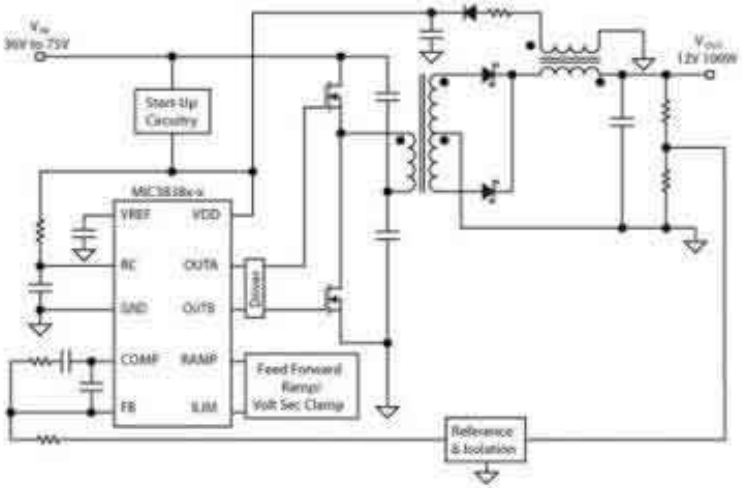

<< BACK

MIC2183

Low Voltage Synchronous Buck PWM Control IC

Online Datasheet

Features:

- Input voltage range: 2.9V to 14V
- >90% efficiency
- Oscillator frequency of 400kHz
- Frequency divide-by-two pin
- Frequency sync to 600kHz
- Front edge blanking
- 5ω output drivers (typical)
- FreqOut oscillator output allows simple charge – - pump implementation in low voltage systems
- PWM current mode control
- 1µA shutdown current
- Cycle-by-cycle current limiting
- Frequency fold-back short circuit protection
- 16-pin narrow-body SOP and QSOP package options

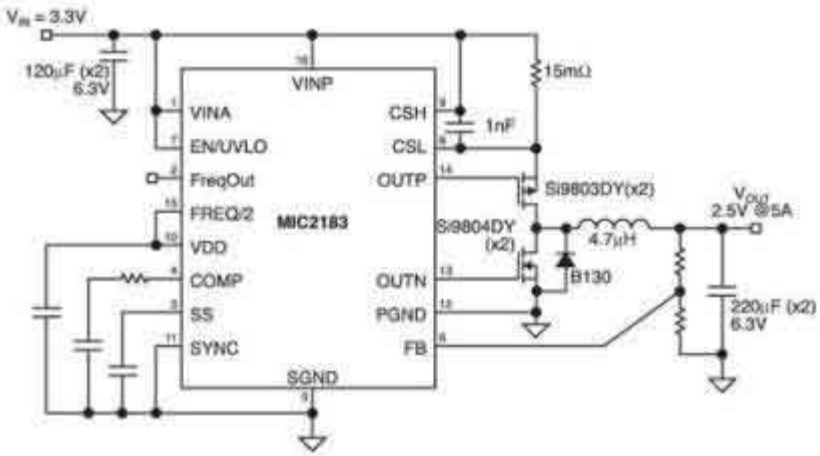

<< BACK

MIC2184

Low Voltage Buck PWM Control IC

Online Datasheet

Features:

- Input voltage range: 2.9V to 14V
- >90% efficiency
- Oscillator frequency of 400kHz
- Frequency divide-by-two pin
- Frequency sync to 600kHz
- FreqOut oscillator output allows simple charge – - pump implementation in low voltage systems
- 1.245V reference output
- Front edge blanking
- 5ω output driver
- PWM current mode control
- 1µA shutdown current
- Frequency fold-back short circuit protection
- 16-pin narrow-body SOIC and QSOP package options

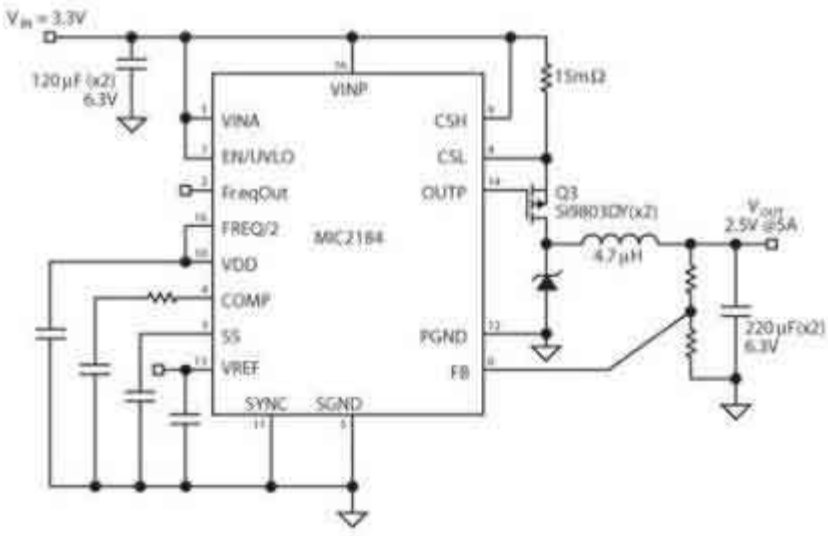

<< BACK

MIC2194

Low Voltage Buck PWM Control IC

Online Datasheet

Features:

- 2.9V to 14V input voltage range
- 400kHz oscillator frequency
- PWM current mode control
- 100% maximum duty cycle
- Front edge blanking
- Four output drivers
- Cycle-by-cycle current limiting
- Frequency fold-back short circuit protection
- 8-lead SOIC package

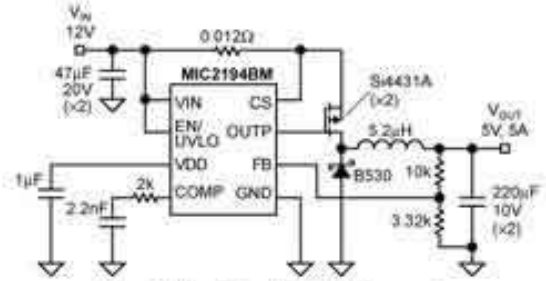

Adjustable Output Buck Converter

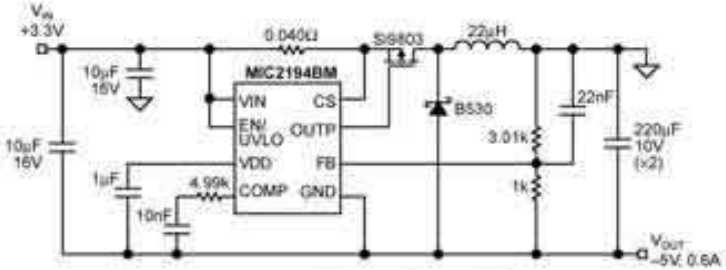

Positive-to-Negative Buck-Boost Converter

<< BACK

MIC2193

400kHz Synchronous Buck Control IC

Online Datasheet

Features:

- 2.9V to 14V input voltage range
- 400kHz oscillator frequency
- PWM current mode control
- 2ω output drivers
- 100% maximum duty cycle
- 0.5µA micro-power shutdown
- Programmable UVLO
- Front edge blanking
- Cycle-by-cycle current limiting
- Frequency fold-back short circuit protection
- 8-lead SOIC package

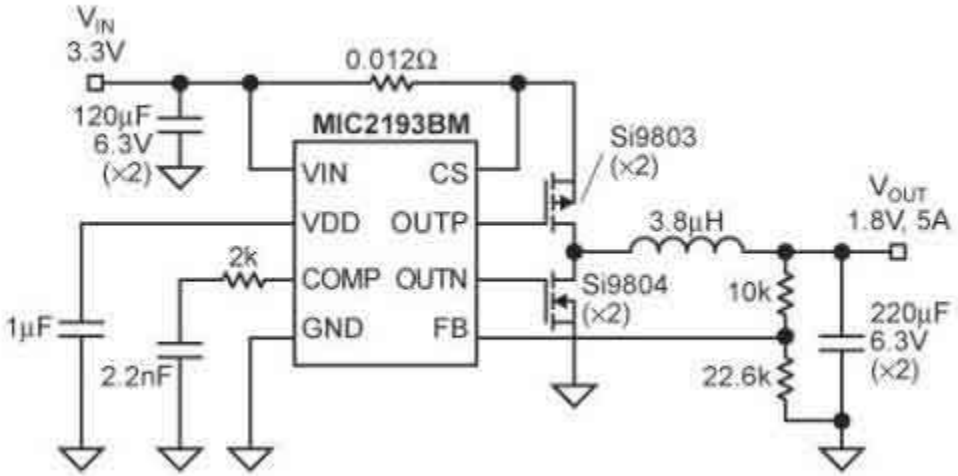

<< BACK

MIC5283

120V 150mA Ultra-Low IQ High-PSRR Linear Regulator

Online Datasheet

Features:

- Wide input voltage range: 6V to 120V DC
- Ultra-low quiescent current: 8µA
- 150mA guaranteed output current
- Adjustable output from 1.22V to 5.5V
- Stable with ceramic output capacitors
- Ultra-high PSRR (75dB at 10kHz)
- Ultra-high line rejection (load dump)
- High output accuracy:
  - ±3% initial accuracy
- Thermal shutdown and current limit protection
- Thermally efficient 8-pin ePad SOIC packages
- Very low profile 3mm x 3mm MLF® package

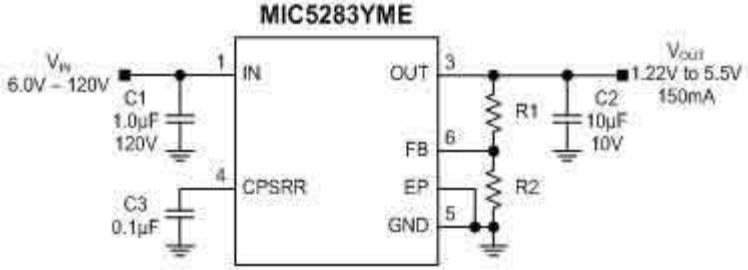

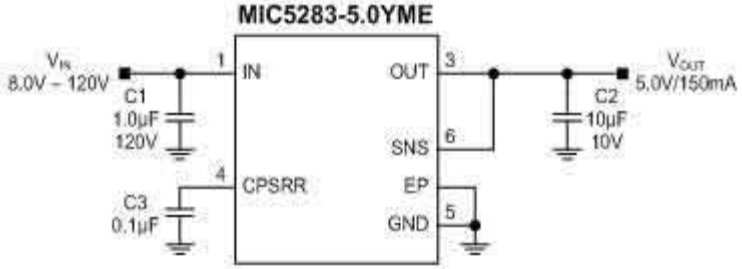

<< BACK

MIC5282

120V 50mA Ultra-Low IQ High-PSRR Linear Regulator

Online Datasheet

Features:

- Wide input voltage range: 6V to 120V DC
- Ultra-low quiescent current: 6µA
- 50mA guaranteed output current
- Adjustable output from 1.27V to 5.5V
- Withstands up to +120V DC at the input
- Stable with ceramic output capacitors
- Ultra-high PSRR (80dB at 10kHz)
- Ultra-high line rejection (load dump)
- High output accuracy:
  - ±3% initial accuracy
- Thermal shutdown and current limit protection
- Thermally efficient, 8-pin MSOP and 8-pin ePad –
  - MSOP packages

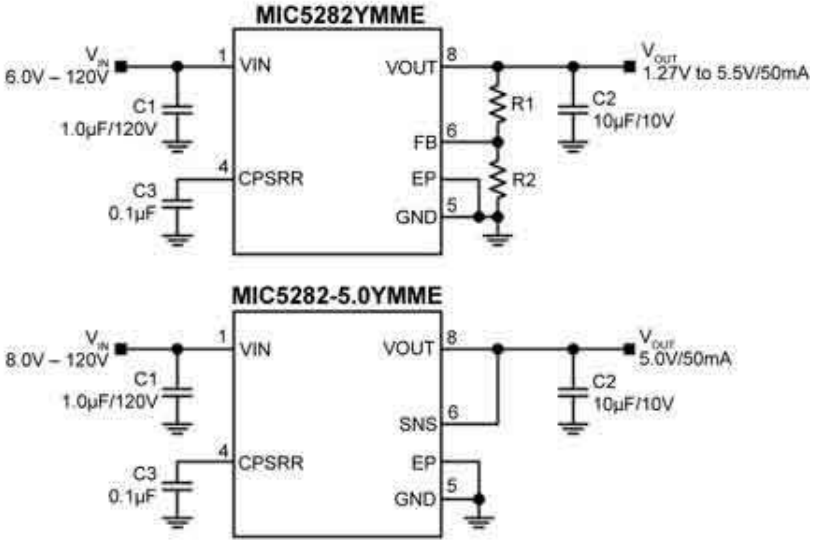

<< BACK

MIC5281

120V 25mA Ultra-Low IQ High-PSRR Linear Regulator

Online Datasheet

Features:

- Wide input voltage range: 6V to 120V DC
- Ultra-low quiescent current: 6µA
- 25mA guaranteed output current
- Adjustable output from 1.27V to 5.5V
- Withstands up to +120V DC at the input
- Stable with ceramic output capacitors
- Ultra-high PSRR <90dB
- Ultra-high line rejection (load dump)
- High output accuracy:
  - ±3% initial accuracy
- Thermal shutdown and current limit protection
- Thermally efficient 8-pin MSOP and 8-pin ePad –
  - MSOP packages

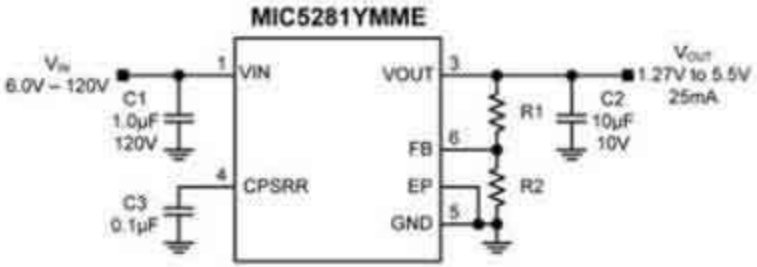

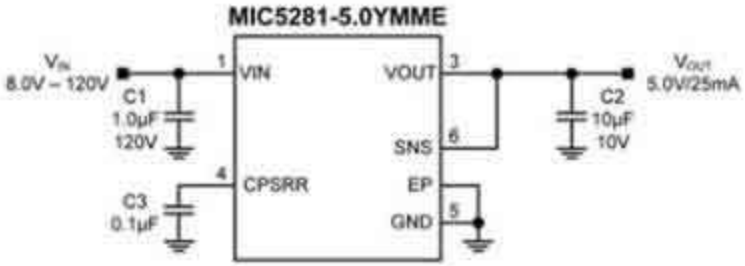

<< BACK

MIC5280

120V 25mA Low IQ High-PSRR Linear Regulator

Online Datasheet

Features:

- Wide input voltage range: 4.5V to 120V DC
- Very low quiescent current: 31µA typical
- 25mA guaranteed output current
- Adjustable output from 1.215V to 5V
- DC voltage protection down to -24V
- Ability to withstand up to +120V DC at the input
- Stable with ceramic output capacitors
- Ultra-high PSRR >80dB for RF applications
- High output accuracy
  - ±2% initial accuracy
  - ±3% over temperature (-40°C to +125°C)
- Thermal shutdown and current limit protection
- Thermally efficient 8-pin ePad SOIC package

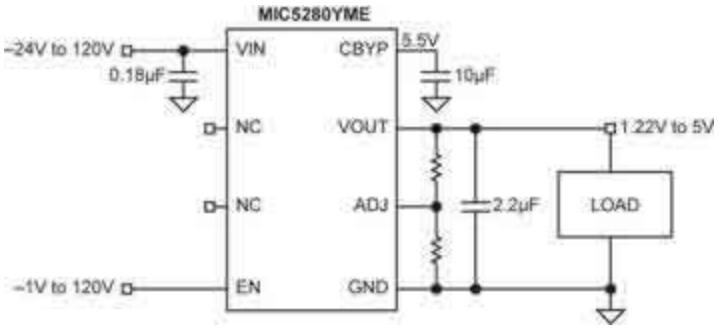

<< BACK

MIC5239

Low Quiescent Current 500mA µCap LDO

Online Datasheet

Features:

- Ultra-low quiescent current (IQ = 23µA @ IO = 100µA)
- Continuous 500mA output current
- Wide input range: 2.3V to 30V
- Low dropout voltage: 350mV at 500mA
- ±1.0% initial output accuracy
- Stable with ceramic or tantalum output capacitor
- Logic-compatible enable input
- Low output voltage error flag indicator
- Overcurrent protection
- Thermal shutdown
- Reverse leakage protection
- Reverse battery protection
- High power SOIC-8, MSOP-8 and SOT-223 packages

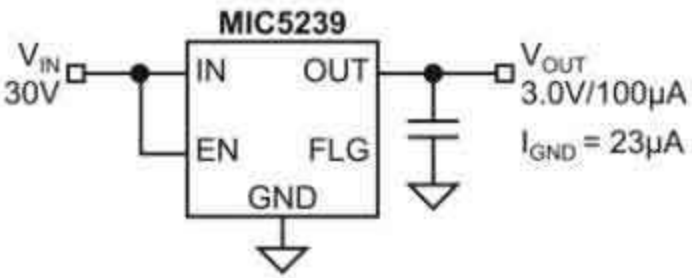

<< BACK

MIC2954

250mA LDO

Online Datasheet

Features:

- High-accuracy: 5V, guaranteed 250mA output
- Low quiescent current
- Low dropout voltage
- Extremely tight load and line regulation
- Very low temperature coefficient
- Current and thermal limiting
- Input can withstand -20V reverse battery and –
  - +60V positive transients
- Error flag warns of low output voltage
- Logic-controlled electronic shutdown
- Output programmable from 1.24V to 29V –
  - (MIC2954-07/08)
- Available in TO-220, TO-92, and surface –
  - mount SOT-223 and SOP-8 packages

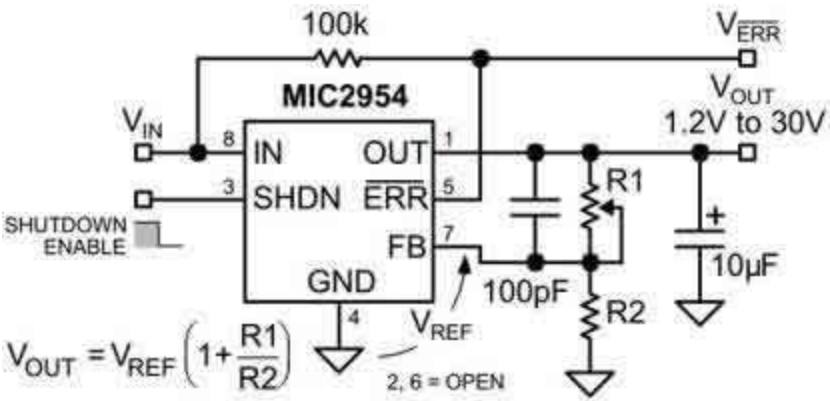

<< BACK

MIC5234

Low-Quiescent Current 150mA LDO

Online Datasheet

Features:

- Ultra-low quiescent current (IQ equals –
  - 20µA at IO equals 100µA)
- Wide input voltage range: 2.3V to 30V
- Low dropout:
  - 230mV at 50mA
  - 320mV at 150mA
- Adjustable output voltage
- Typical ±1.0% initial output accuracy
- Logic-compatible enable input
- Overcurrent protection
- Thermal shutdown protection
- Reverse leakage and reverse battery protection
- Thermally enhanced 8-pin ePad SOIC package

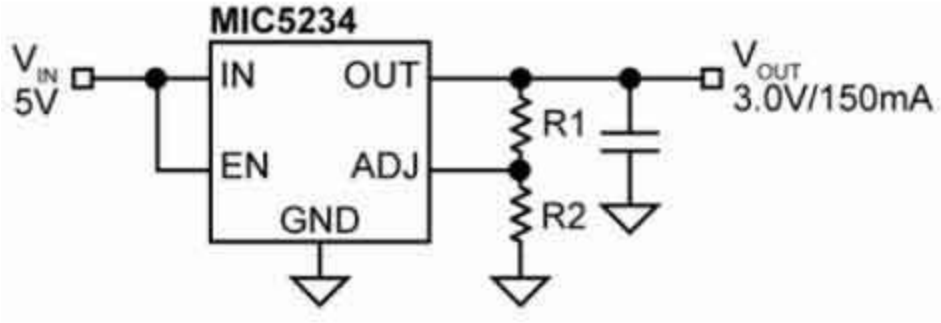

<< BACK

MIC5236

Low Quiescent Current µCap LDO

Online Datasheet

Features:

- Ultra-low quiescent current (IQ equals 20µA at IO –
  - equals 100µA)
- Wide input range: 2.3V to 30V
- Low dropout:
  - 230mV at 50mA;
  - 300mV at 150mA
- Fixed 2.5V, 3.0V, 3.3V, 5.0V and adjustable outputs
- ±1.0% initial output accuracy
- Stable with ceramic or tantalum output capacitor
- Load dump protection: -20V to +60V input transient –
  - survivability
- Logic-compatible enable input
- Low output flag indicator
- Reverse leakage protection
- Reverse battery protection
- High power SOP-8 and MSOP-8

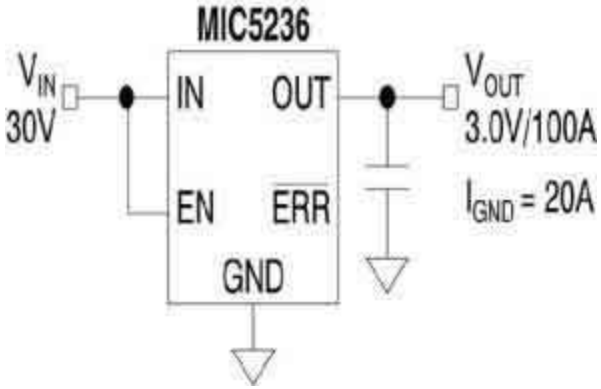

<< BACK

MIC2951

150mA LDO

Online Datasheet

Features:

- High accuracy: 3.3V, 4.85V, or 5V with –
  - guaranteed 150mA output
- Extremely low quiescent current
- Low-dropout voltage
- Extremely tight load and line regulation
- Very low temperature coefficient
- Use as regulator or reference
- Needs only 1.5µF for stability
- Current and thermal limiting
- Unregulated DC input can withstand –20V –
  - reverse battery and +60V positive transients
- Error flag warns of output dropout
- Logic-controlled electronic shutdown
- Output programmable from 1.24V to 29V

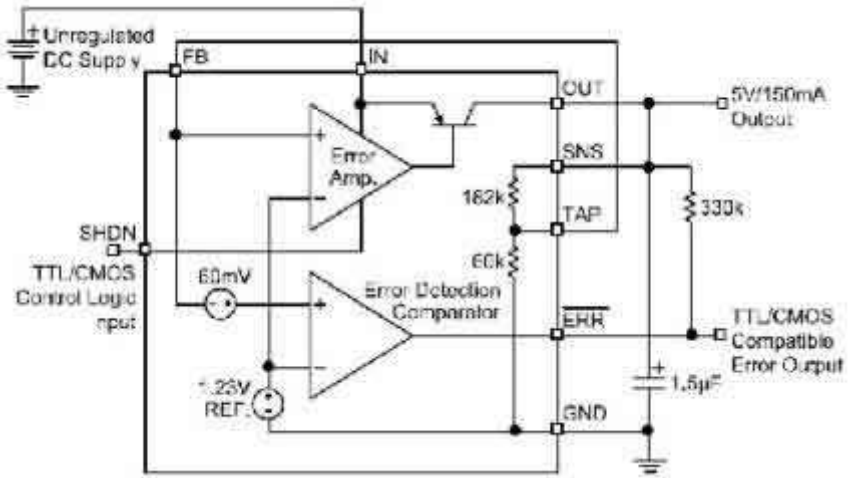

<< BACK

MIC5233

High Input Voltage Low IQ µCap LDO

Online Datasheet

Features:

- Wide input voltage range: 2.3V to 36V
- Ultra-low ground current: 18µA
- Low dropout voltage of 270mV at 100mA
- High output accuracy of ±2.0% over –
  - temperature
- µCap: stable with ceramic or tantalum –
  - capacitors
- Excellent line and load regulation –
  - specifications
- Zero off-mode current
- Reverse battery protection
- Reverse leakage protection
- Thermal shutdown and current limit protection
- IttyBitty® SOT-23-5 package

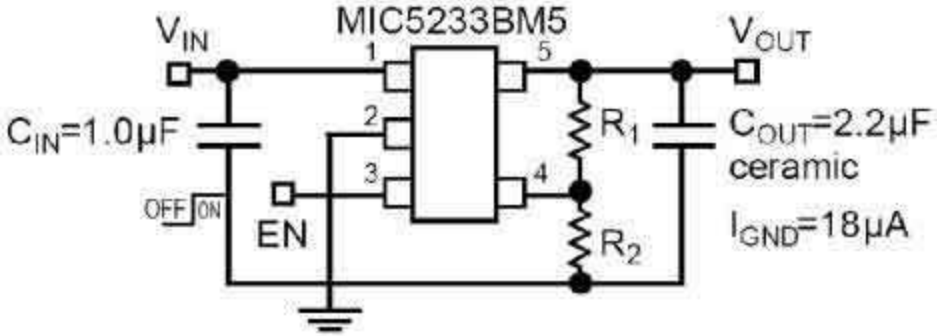

<< BACK

LP2951

100mA LDO

Online Datasheet

Features:

- High accuracy 5V, guaranteed 100 mA output
- Extremely low quiescent current
- Low-dropout voltage
- Extremely tight load and line regulation
- Very low temperature coefficient
- Use as regulator or reference
- Needs only 1µF for stability
- Current and thermal limiting
- LP2951 Versions Only:
  - Error flag warns of output dropout
  - Logic-controlled electronic shutdown
  - Output programmable from 1.24V to 29V

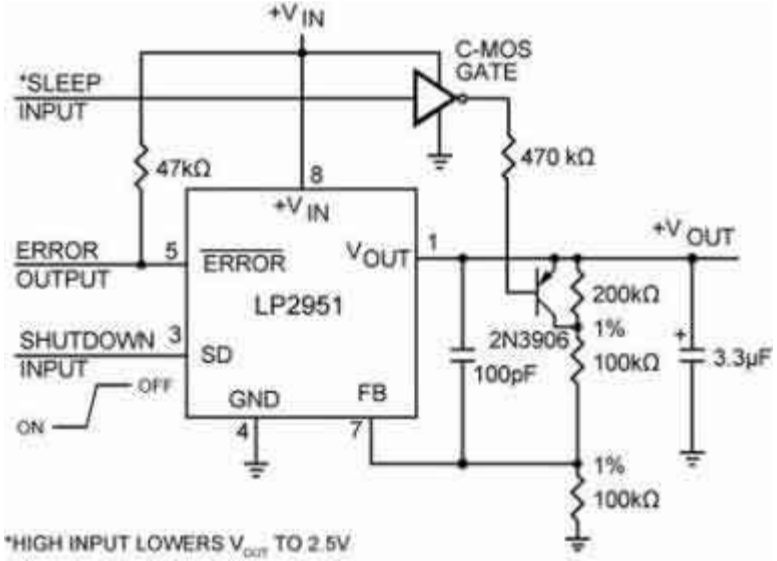

<< BACK

MIC29500/1/2/3

High-Current LDOs

Online Datasheet

Features:

- High current capability:
  - MIC29150/29151/29152/29153: 1.5A
  - MIC29300/29301/29302/29303: 3A
  - MIC29500/29501/29502/29503: 5A
  - MIC29750/29751/29752: 7.5A
- Low dropout voltage
- Low ground current
- Accurate 1% guaranteed tolerance
- Reverse-battery and load dump protection
- Zero-current shutdown mode (5-pin versions)
- Error flag signals output out-of-regulation (5-pin versions)
- Also characterized for smaller loads with industry –
  - leading performance specifications
- Fixed voltage and adjustable versions

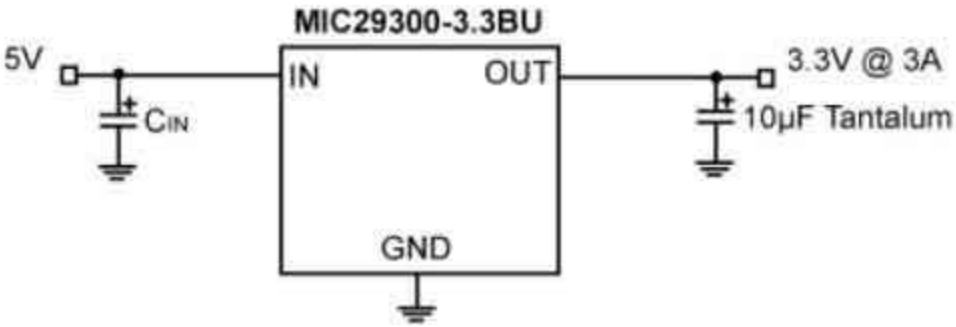

<< BACK

MIC29300/1/2/3

High-Current LDOs

Online Datasheet

Features:

- High current capability:
  - MIC29150/29151/29152/29153: 1.5A
  - MIC29300/29301/29302/29303: 3A
  - MIC29500/29501/29502/29503: 5A
  - MIC29750/29751/29752: 7.5A
- Low dropout voltage
- Low ground current
- Accurate 1% guaranteed tolerance
- Extremely fast transient response
- Reverse-battery and load dump protection
- Zero-current shutdown mode (5-pin versions)
- Error flag signals output out-of-regulation (5-pin versions)
- Also characterized for smaller loads with industry-leading performance specifications
- Fixed voltage and adjustable versions

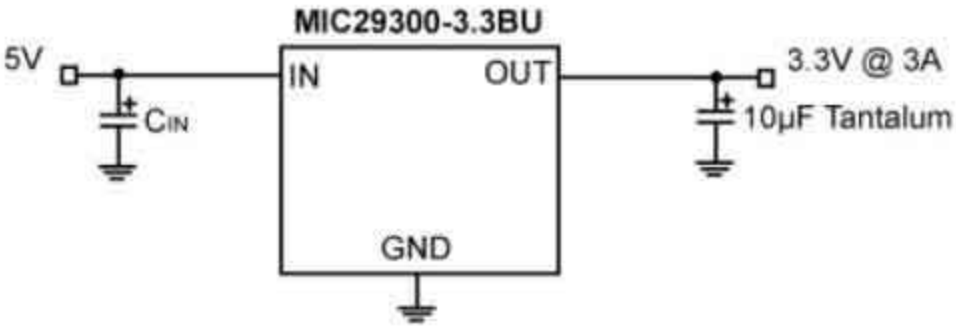

<< BACK

MIC29302HWU

High-Current LDO

Online Datasheet

Features:

- 3A current capability
- Low dropout voltage
- Low ground current
- Accurate 1% guaranteed tolerance
- Extremely fast transient response
- Reverse-battery and “Load Dump” protection
- Zero-current shutdown mode
- Error flag signals output out-of-regulation
- Also characterized for smaller loads with industry –
  - leading performance specifications

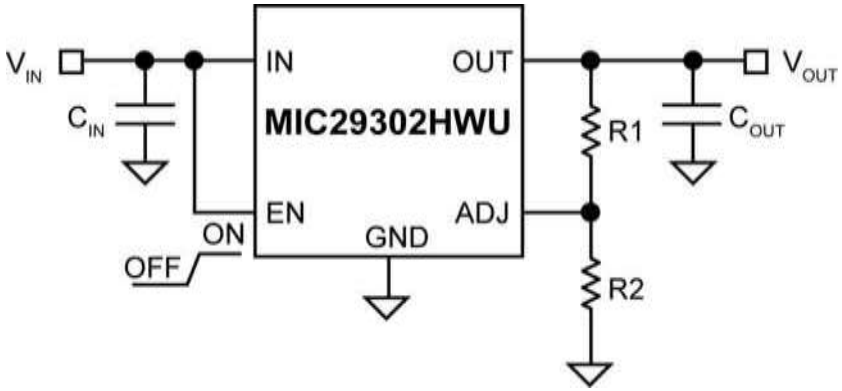

<< BACK

MIC29150/1/2/3

High-Current LDOs

Online Datasheet

Features:

- High current capability:
  - MIC29150/29151/29152/29153: 1.5A
  - MIC29300/29301/29302/29303: 3A
  - MIC29500/29501/29502/29503: 5A
  - MIC29750/29751/29752: 7.5A
- Low dropout voltage
- Low ground current
- Accurate 1% guaranteed tolerance
- Extremely fast transient response
- Reverse-battery and load dump protection
- Zero-current shutdown mode (5-pin versions)
- Error flag signals output out-of-regulation (5-pin versions)
- Also characterized for smaller loads with industry –
  - leading performance specifications
- Fixed voltage and adjustable versions

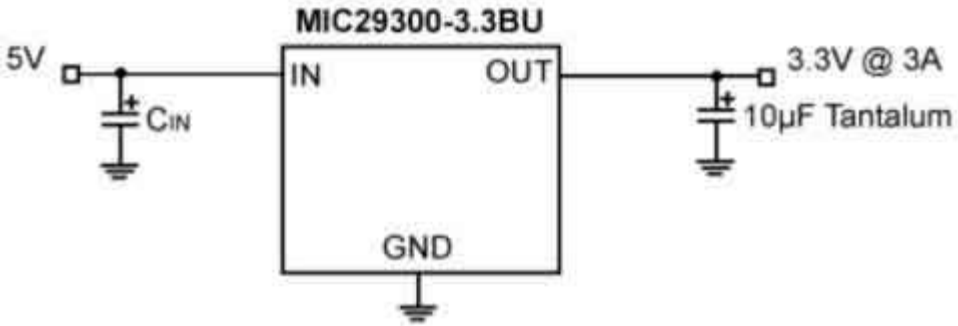

<< BACK

MIC2940A/41A

1.25A LDOs

Online Datasheet

Features:

- High output voltage accuracy
- Guaranteed 1.25A output
- Low quiescent current
- Low dropout voltage
- Extremely tight load and line regulation
- Very low temperature coefficient
- Current and thermal limiting
- High output voltage accuracy
- Guaranteed 1.25A output
- Low quiescent current
- Low dropout voltage
- Extremely tight load and line regulation
- Very low temperature coefficient
- Current and thermal limiting

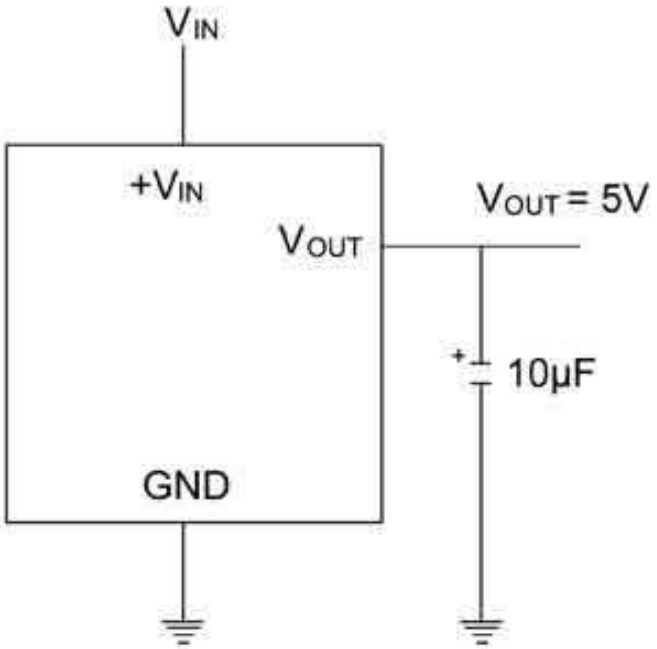

<< BACK

MIC2937A/1/2

750mA LDOs

Online Datasheet

Features:

- High output voltage accuracy
- Guaranteed 750mA output
- Low quiescent current
- Low dropout voltage
- Extremely tight load and line regulation
- Very low temperature coefficient
- Current and thermal limiting
- Input can withstand -20V reverse battery and +60V –
  - positive transients
- Error flag warns of output dropout
- Logic-controlled electronic shutdown
- Output programmable from 1.24V to 26V (MIC29372)
- Available in TO-220, TO-263, TO-220-5, and –
  - TO-263-5 packages

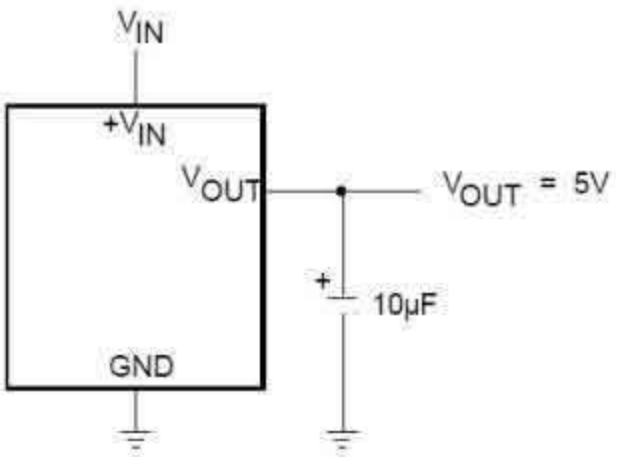

<< BACK

MIC2920A/1/2/4

400mA LDOs

Online Datasheet

Features:

- High output voltage accuracy
- Guaranteed 400mA output
- Low quiescent current
- Low dropout voltage
- Extremely tight load and line regulation
- Very low temperature coefficient
- Current and thermal limiting
- Input withstands -20V reverse battery and +60V –
  - positive transients
- Error flag warns of output dropout
- Logic-controlled electronic shutdown
- Output programmable from 1.24V to 26V –
  - (MIC29202/MIC29204)
- Available in TO-220, TO-220-5, and surface-mount –
  - TO-263-5, SOT-223, and SO-8 packages.

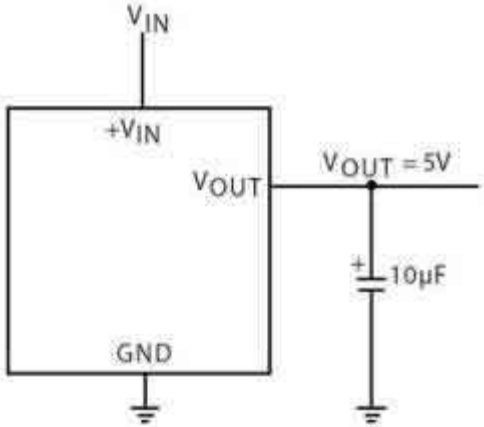

<< BACK

MIC5201

200mA LDO

Online Datasheet

Features:

- High output voltage accuracy
- Variety of output voltages
- Guaranteed 200mA output
- Low quiescent current
- Low dropout voltage
- Extremely tight load and line regulation
- Very low temperature coefficient
- Current and thermal limiting
- Reversed battery protection
- Load-dump protection (fixed voltage versions)
- Zero off-mode current state
- Logic-controlled electronic enable
- Available in SO-8 and SOT-223 packages

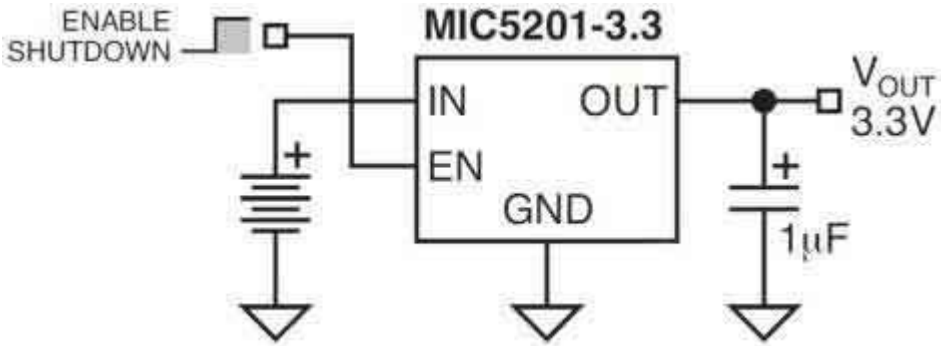

<< BACK

MIC5235

Ultra-Low Quiescent Current 150mA µCap LDO

Online Datasheet

Features:

- Wide input voltage range: 2.3V to 24V
- Ultra-low ground current: 18µA
- Low dropout voltage: 310mV at 150mA
- High output accuracy: ±2.0% over temperature
- µCap: stable with ceramic or tantalum capacitors
- Excellent line and load regulation specifications
- Zero off-mode current
- Reverse battery protection
- Reverse leakage protection
- Thermal shutdown and current limit protection
- IttyBitty® SOT-23-5 package

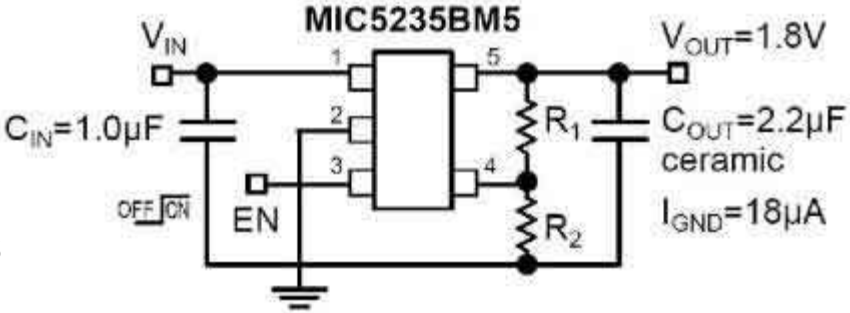

<< BACK

MIC5295

Low Quiescent Current 150mA LDO

Online Datasheet

Features:

- Wide input voltage range: 2.3V to 24V
- Ultra-low ground current: 18µA
- Low dropout voltage: 300mV at 150mA
- High initial output accuracy: ±1.0%
- Stable with ceramic or tantalum capacitors
- Excellent line and load regulation specifications
- Reverse battery protection
- Reverse leakage protection
- Thermal shutdown and current limit protection
- Power TO-252-5 (D-Pak) package
- Adjustable output from 1.24V to 20V

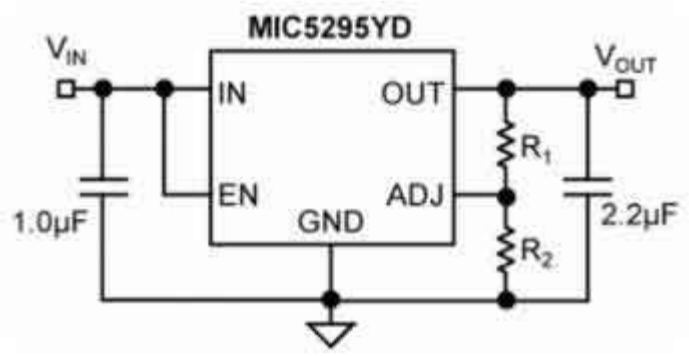

<< BACK

MIC5200

100mA LDO

Online Datasheet

Features:

- High output voltage accuracy
- Variety of output voltages
- Guaranteed 100mA output
- Low quiescent current
- Low dropout voltage
- Extremely tight load and line regulation
- Very low temperature coefficient
- Current and thermal limiting
- Zero off-mode current
- Logic-controlled electronic shutdown
- Available in 8-pin SOIC, MM8® 8-pin MSOP –
  - and SOT-223 packages

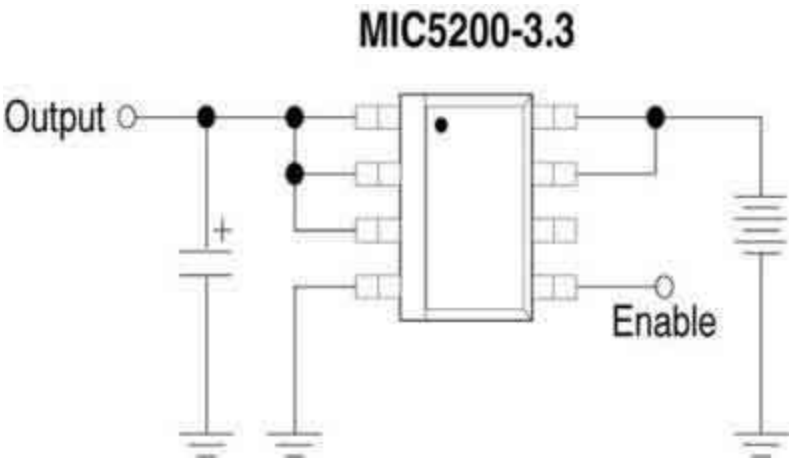

<< BACK

MIC29712

7.5A Fast-Response LDO Regulator

Online Datasheet

Features:

- Fast transient response
- 7.5A current capability
- 700mV dropout voltage at full load
- Low ground current
- Accurate 2% guaranteed tolerance
- Zero-current shutdown mode
- No minimum load current
- Fixed voltage and adjustable versions

<< BACK

MIC29510/2

5A Fast-Response LDO Regulator

Online Datasheet

Features:

- Fast transient response
- 5A current capability
- 700mV dropout voltage at full load
- Low ground current
- Accurate 1% guaranteed tolerance
- Zero current shutdown mode (MIC29512)
- Fixed voltage and adjustable versions

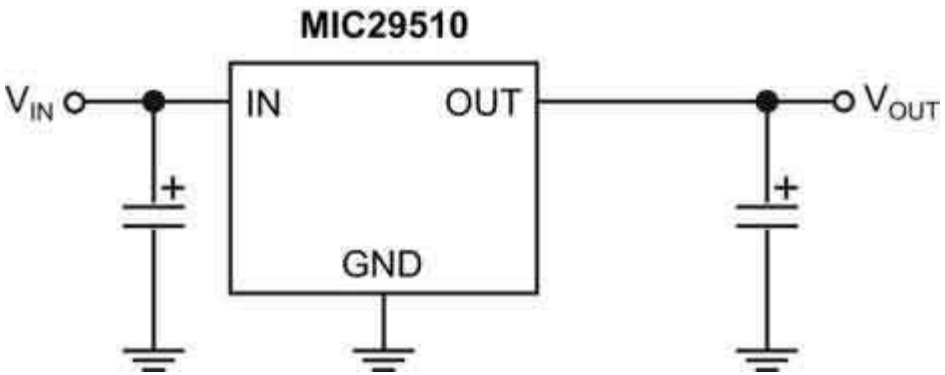

<< BACK

MIC39500/1

5A Low-Voltage Low-Dropout Regulator

Online Datasheet

Features:

- 5A minimum guaranteed output current
- 400mV dropout voltage:
  - Ideal for 3.0V to 2.5V conversion
  - Ideal for 2.5V to 1.8V conversion
- 1% initial accuracy
- Low ground current
- Current limiting and thermal shutdown
- Reverse battery and reverse lead insertion protection
- Reverse leakage protection
- Fast transient response
- TO-263 and TO-220 packages
- TTL/CMOS-compatible enable pin (MIC39501 only)
- Error flag output (MIC39501 only)
- Ceramic capacitor stable (See application information)

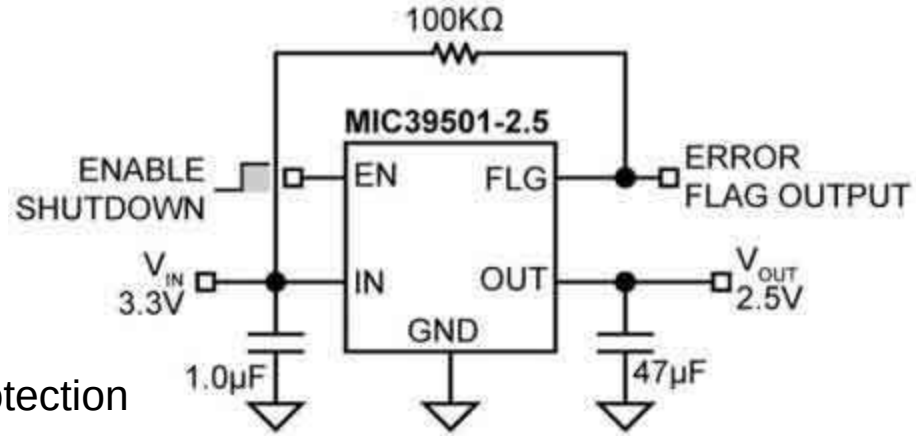

<< BACK

MIC29302A

3A Fast-Response LDO Regulator

Online Datasheet

Features:

- High current capability:
  - 3A over full temperature range
- Low dropout voltage of 450mV at full load
- Low ground current
- Accurate 1% guaranteed tolerance
- Extremely fast transient response
- Zero-current shutdown mode
- Error flag signals output out-of-regulation
- Adjustable output voltage
- Available in TO-263-L and TO-252-5L packages

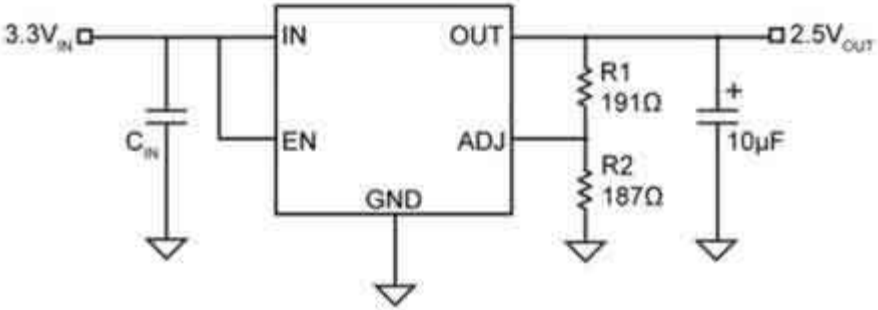

$$V_{OUT} = 1.242 \times \left(\frac{R1}{R2} + 1\right)$$

<< BACK

MIC29310/12

3A Fast-Response LDO Regulator

Online Datasheet

Features:

- Low cost versions of MIC29300 family
- Fast transient response
- 3A current over full temperature range
- 600mV dropout voltage at full load
- Low ground current
- Accurate 1% guaranteed tolerance
- Zero current shutdown mode (MIC29312)
- Fixed voltage and adjustable versions

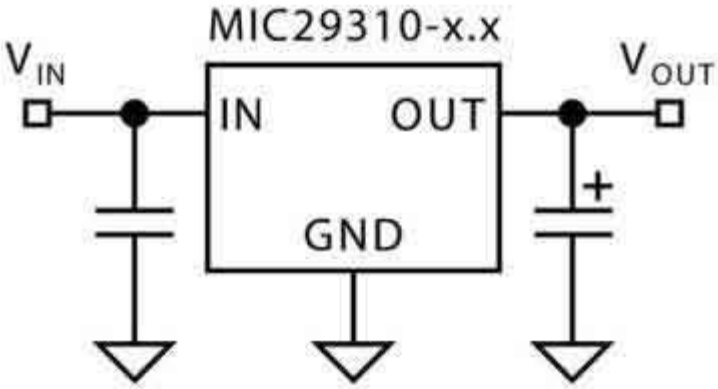

<< BACK

MIC39300/1/2

3A Low-Voltage Low-Dropout Regulator

Online Datasheet

Features:

- 3.0A minimum guaranteed output current:
  - Ideal for 3.0V to 2.5V conversion
  - Ideal for 2.5V to 1.8V conversion
- 1% initial accuracy
- Low ground current
- 550mV maximum dropout voltage over –
  - temperature
- Current limiting and thermal shutdown
- Reverse battery protection
- Reverse leakage protection
- Fast transient response
- TO-263 (D2Pak) and TO-220 packaging
- TTL/CMOS compatible enable pin (MIC39301/2 only)
- Error flag output (MIC39301 only)
- Adjustable output (MIC39302 only)

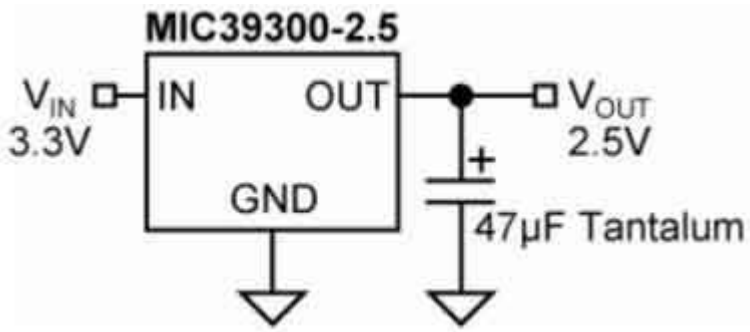

<< BACK

MIC39150/1/2

1.5A Low-Voltage Low-Dropout Regulator

Online Datasheet

Features:

- 1.5A minimum guaranteed output current
- 500mV maximum dropout voltage over temperature:
  - Ideal for 3.0V to 2.5V conversion
  - Ideal for 2.5 to 1.8V or 1.65V conversion
- 1% initial accuracy
- Low ground current
- Current limiting and thermal shutdown
- Reverse battery and reverse lead insertion protection
- Reverse leakage protection
- TTL/CMOS-compatible enable pin (MIC39151/2 only)
- Error flag output (MIC39151 only)
- Adjustable output (MIC39152 only)
- Power D-Pak package (TO-252) Adjustable only
- Power D²Pak Package (TO-263)

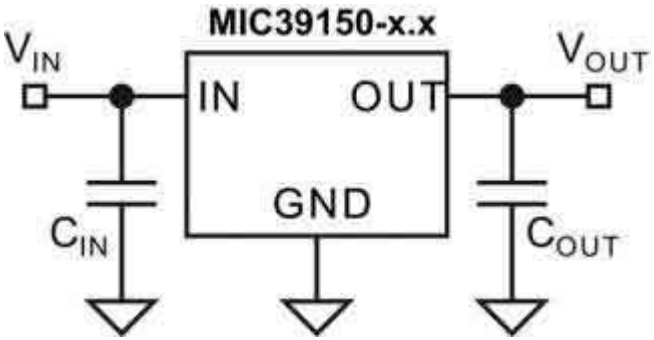

<< BACK

MIC39100/1/2

1A Low-Voltage Low-Dropout Regulator

Online Datasheet

Features:

- Fixed and adjustable output voltages to 1.24V
- 410mV typical dropout at 1A:
  - Ideal for 3.0V to 2.5V conversion
  - Ideal for 2.5V to 1.8V conversion
- 1A minimum guaranteed output current
- 1% initial accuracy
- Low ground current
- Current limiting and thermal shutdown
- Reversed-battery protection
- Reversed-leakage protection
- Fast transient response
- Low-profile SOT-223 package
- Power SO-8 package

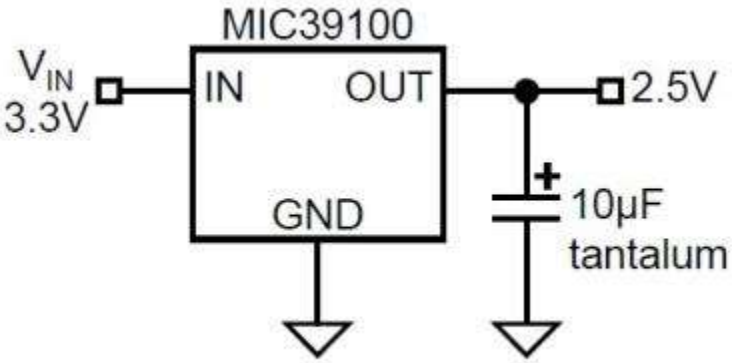

<< BACK

MIC3975

1A Low-Voltage Low-Dropout Regulator

Online Datasheet

Features:

- Fixed and adjustable output voltages to 1.24V
- 280mV typical dropout at 750mA:
  - Ideal for 3.0V to 2.5V conversion
  - Ideal for 2.5V to 1.8V or 1.65V conversion
- Stable with ceramic capacitor
- 750mA minimum guaranteed output current
- 1% initial accuracy
- Low ground current
- Current limiting and thermal shutdown
- Reverse battery protection
- Reverse leakage protection
- Fast transient response
- Low-profile MSOP-8

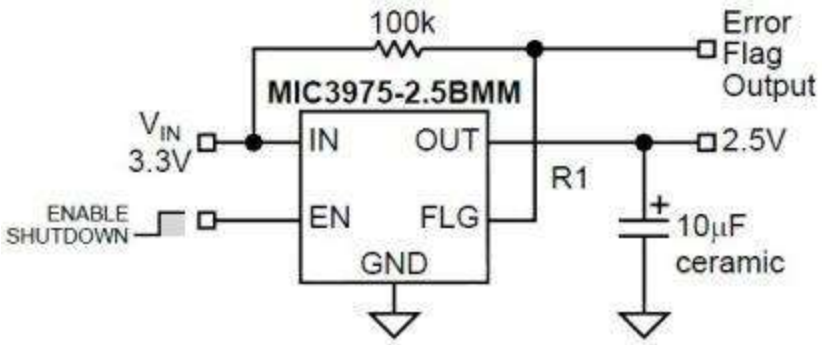

<< BACK

MIC5209

1A Low-Voltage LDO

Online Datasheet

Features:

- Fixed and adjustable output voltages to 1.24V
- 280mV typical dropout at 750mA:
  - Ideal for 3.0V to 2.5V conversion
  - Ideal for 2.5V to 1.8V or 1.65V –
    - conversion
- Stable with ceramic capacitor
- 750mA minimum guaranteed output current
- 1% initial accuracy
- Low ground current
- Current limiting and thermal shutdown
- Reverse battery protection
- Reverse leakage protection
- Fast transient response
- Low-profile MSOP-8

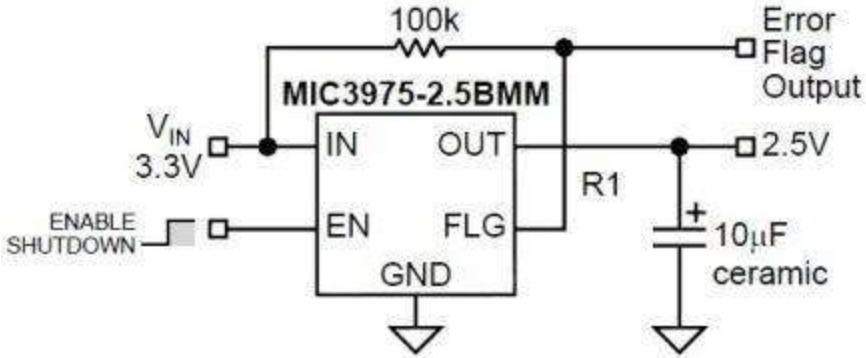

<< BACK

MIC5237

500mA LDO

Online Datasheet

Features:

- Low 300mV typical dropout voltage at full load
- Extremely tight load and line regulation
- Current and thermal limiting
- Reversed battery protection
- TO-220 and TO-263 packages
- Low temperature coefficient
- Guaranteed 500mA output over the full operating –
  - temperature range
- No-load stability
- Low noise output

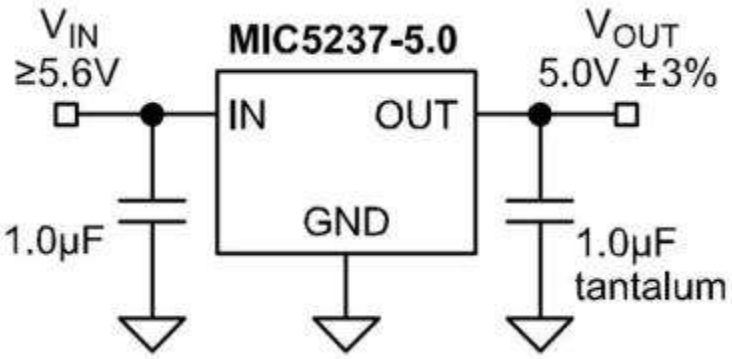

<< BACK

MIC5216

500mA-Peak Output LDO

Online Datasheet

Features:

- Error flag indicates under-voltage fault
- Low 500mV maximum dropout voltage at full load
- Extremely tight load and line regulation
- Tiny SOT-23-5 and MM8® power MSOP-8 package
- Low noise output
- Low temperature coefficient
- Current and thermal limiting
- Reversed battery protection
- Guaranteed 500mA peak output over the full –
  - operating temperature range
- CMOS/TTL-compatible enable/shutdown control
- Near-zero shutdown current

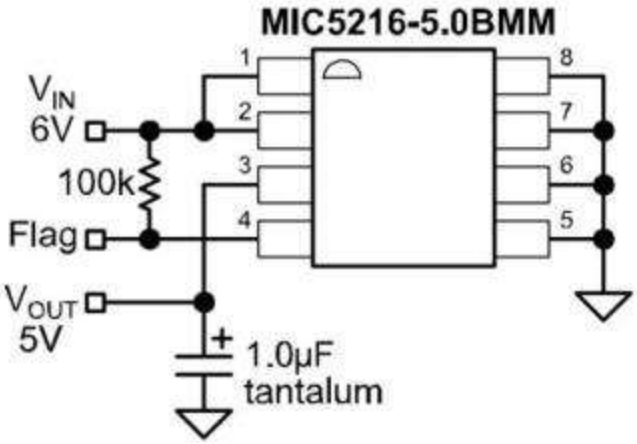

<< BACK

MIC5219

500mA-Peak Output LDO

Online Datasheet

Features:

- Low 500mV maximum dropout voltage at full load
- Extremely tight load and line regulation
- Ultra-low noise output
- Low temperature coefficient
- Current and thermal limiting
- Tiny SOT-23-5 and MM8® power MSOP-8 package
- 500mA output current capability:
  - SOT-23-5 package - 500mA peak
  - 2mm x 2mm MLF® and Thin MLF® packages – - 500mA continuous
  - MSOP-8 package - 500mA continuous
- Reversed battery protection
- CMOS/TTL-compatible enable/shutdown control
- Near-zero shutdown current

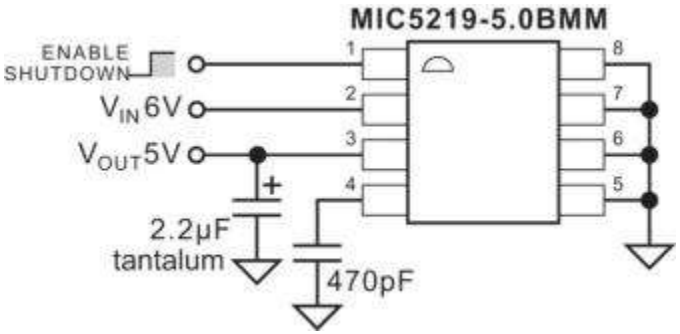

<< BACK

MIC5207

180mA Low-Noise LDO

Online Datasheet

Features:

- Ultra-low noise output
- High output voltage accuracy
- Guaranteed 180mA output
- Low quiescent current
- Low dropout voltage
- Extremely tight load and line regulation
- Very low temperature coefficient
- Current and thermal limiting
- Reverse battery protection
- Zero off-mode current state
- Logic-controlled electronic enable

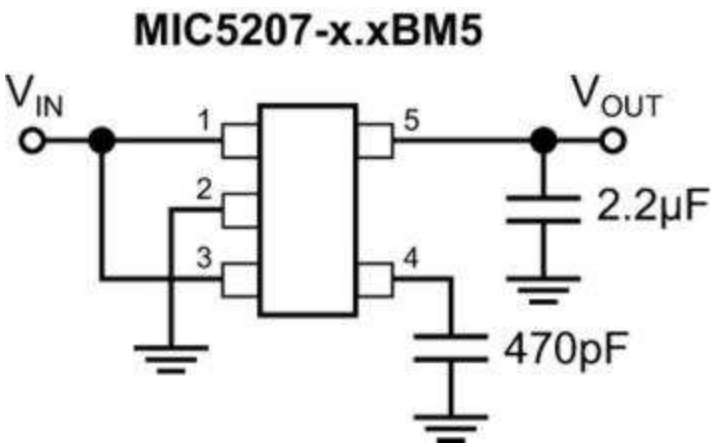

<< BACK

MIC5205

150mA Low-Noise LDO

Online Datasheet

Features:

- Ultra-low noise output
- High output voltage accuracy
- Guaranteed 150mA output
- Low quiescent current
- Low dropout voltage
- Extremely tight load and line regulation
- Very low temperature coefficient
- Current and thermal limiting
- Reverse battery protection
- Zero off-mode current
- Logic-controlled electronic enable

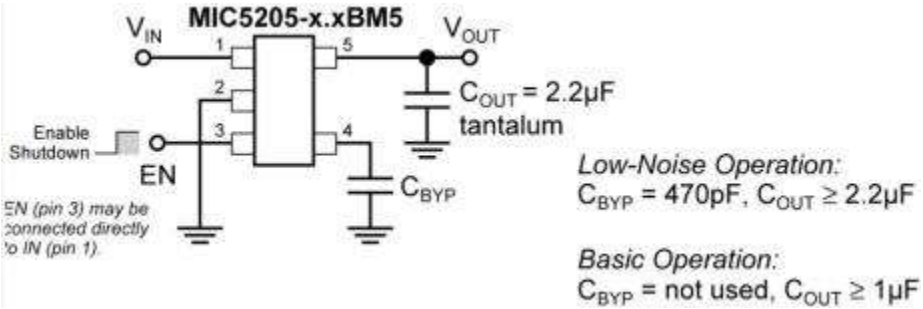

<< BACK

MIC5206

150mA Low-Noise LDO

Online Datasheet

Features:

- Error flag indicates under-voltage fault
- High output voltage accuracy
- Guaranteed 150mA output
- Ultra-low noise output (8-pin versions)
- Low quiescent current
- Low dropout voltage
- Extremely tight load and line regulation
- Very low temperature coefficient
- Current and thermal limiting
- Reversed battery protection
- Zero off-mode current
- Logic-controlled electronic enable

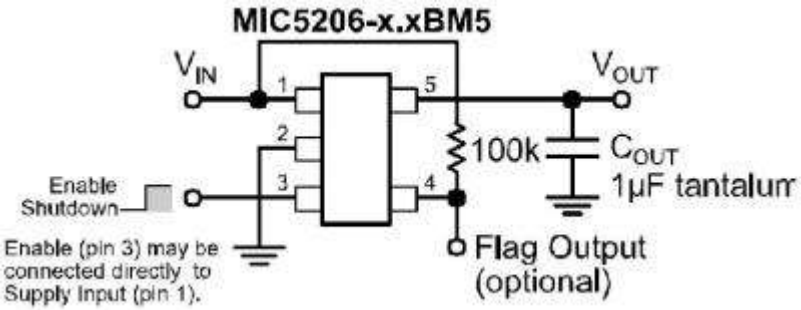

<< BACK

MIC5225

Low Quiescent Current 150mA µCap LDO

Online Datasheet

Features:

- Wide input voltage range: 2.3V to 16V
- High output accuracy of ±2.0% over –
  - temperature
- Guaranteed 150mA output
- Very low ground current: 29µA
- Low dropout voltage of 310mV at 150mA
- µCap: stable with ceramic or tantalum capacitors
- Excellent line and load regulation specifications
- Reverse battery protection
- Reverse leakage protection
- Zero off-mode current
- Thermal shutdown and current limit protection
- IttyBitty® SOT-23-5 package

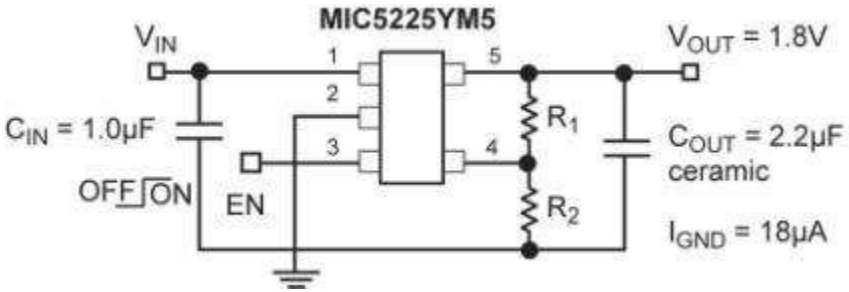

<< BACK

MIC5203

µCap 80mA LDO

Online Datasheet

Features:

- Tiny 4-lead and 5-lead surface-mount –
  - packages
- Wide selection of output voltages
- Guaranteed 80mA output
- Low quiescent current
- Low dropout voltage
- Tight load and line regulation
- Low temperature coefficient
- Current and thermal limiting
- Reversed input polarity protection
- Zero off-mode current
- Logic-controlled shutdown
- Stability with low-ESR ceramic capacitors

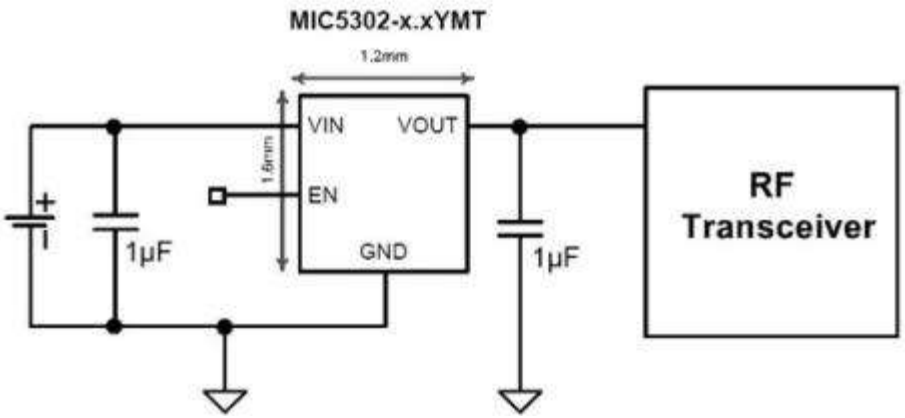

<< BACK

MIC5213

Teeny™ SC-70 µCap LDO

Online Datasheet

Features:

- Teeny™ SC-70 package
- Wide selection of output voltages
- Guaranteed 80mA output
- Low quiescent current
- Low dropout voltage
- Tight load and line regulation
- Low temperature coefficient
- Current and thermal limiting
- Reversed input polarity protection
- Zero off-mode current
- Logic-controlled shutdown
- Stability with low-ESR ceramic capacitors

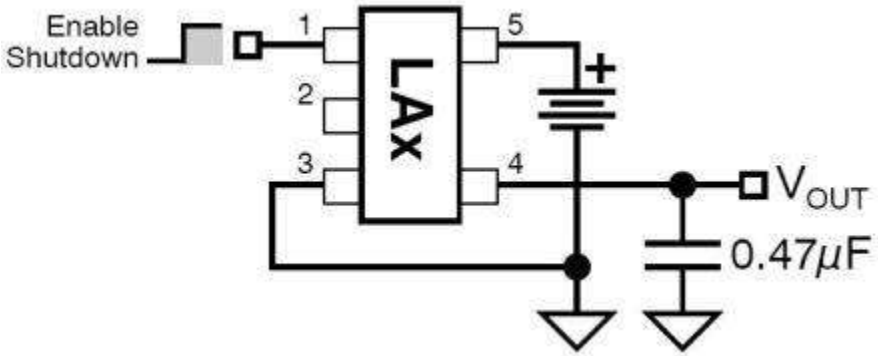

<< BACK

MIC5231

10mA µCap™ LDO

Online Datasheet

Features:

- Extremely low quiescent current: only 0.65µA
- No output capacitor requirement
- Stable with ceramic or tantalum capacitors
- IttyBitty® SOT-23-5 surface-mount package
- 10mA output drive
- Low 150mV at 10mA dropout voltage
- Tight load and line regulation
- Low temperature coefficient
- Logic-level enable input

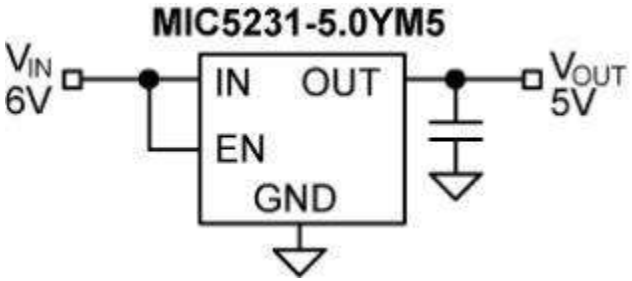

<< BACK

MIC37501/2

5A Low Voltage µCap LDO Regulator

Online Datasheet

Features:

- 5A minimum guaranteed output current
- 500mV maximum dropout voltage:
  - Ideal for 3.0V to 2.5V conversion
  - Ideal for 2.5V to 1.8V, 1.65V, or 1.5V – - conversion
- Stable with ceramic or tantalum capacitor:
  - V_{IN} : 2.3V to 6.0V
- ±1.0% initial output tolerance
- Fixed and adjustable output voltages:
  - MIC37501 -7 terminal fixed voltage
  - MIC37502 -5 (TO-263) and 7 (SPAK) terminal adjustable voltage
- Excellent line and load regulation specifications
- Logic controlled shutdown
- Thermal shutdown and current-limit protection
- Reverse leakage protection
- Low-profile S-Pak and TO-263 packages

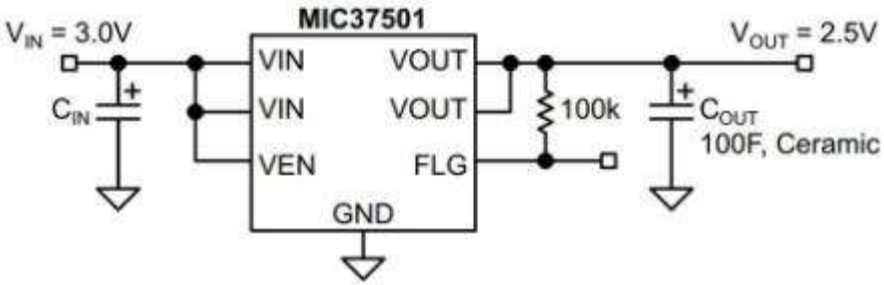

<< BACK

MIC49500

5A Dual Supply Low Voltage High Bandwidth LDO

Online Datasheet

Features:

- Input voltage range: 2.7V to 6.0V:
  - V_{IN} : 1.4V to 6V
  - V_{BIAS} : 3V to 6V
- Stable with 10µF ceramic output capacitor
- ±1.0% initial output tolerance
- Maximum dropout (VIN - VOUT) is 500mV over –
  - temperature
- Adjustable output voltage down to 0.7V
- Ultra-fast transient response (Up to 10MHz bandwidth)
- Excellent line and load regulation specifications
- Logic controlled shutdown option
- Thermal shutdown and current limit protection
- Thin 7-pin S-Pak package
- TO-263 7-pin package
- -40ºC to +125ºC operating junction temperature range

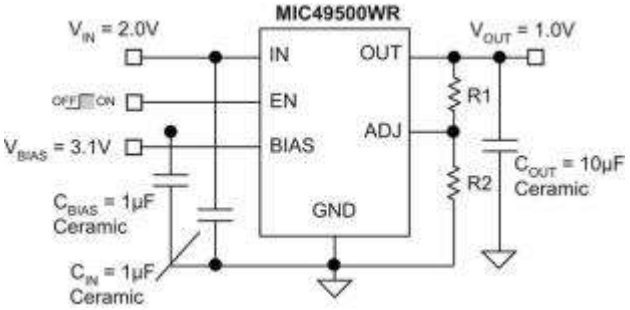

<< BACK

MIC49300

3.0A Low Voltage LDO w/Dual Input Voltages

Online Datasheet

Features:

- Input voltage range:
  - V_{IN} : 1.4V to 6.5V
  - V_{BIAS} : 3.0V to 6.5V
- Stable with 1µF ceramic capacitor
- ±1% initial tolerance
- Maximum dropout voltage (VIN-VOUT) of 500mV –
  - over temperature
- Adjustable output voltage down to 0.9V
- Ultra-fast transient response (Up to 10MHz bandwidth)
- Excellent line and load regulation specifications
- Logic controlled shutdown option
- Thermal shutdown and current limit protection
- Power S-Pak package
- Junction temperature range: -40ºC to +125ºC

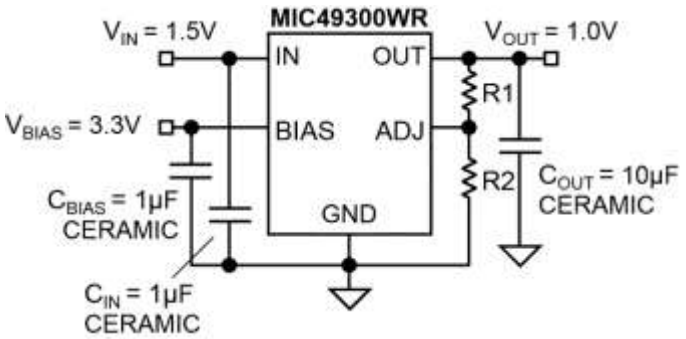

<< BACK

MIC47300

3A Low Voltage Adj. LDO with Dual Input Supply

Online Datasheet

Features:

- Input voltage range:
  - V_{IN} : 1.4V to 6.5V
  - V_{BIAS} : 3.0V to 6.5V
- Stable with 1µF ceramic capacitor
- ±1% initial tolerance
- Maximum dropout voltage (VIN–VOUT) of –
  - 400mV over temperature
- Adjustable output voltage down to 0.9V
- Ultra fast transient response (Up to 10MHz bandwidth)
- Excellent line and load regulation specifications
- Power D-Pak package (TO-252)
- Thermal shutdown and current limit protection
- Junction temperature range: -40ºC to +125ºC

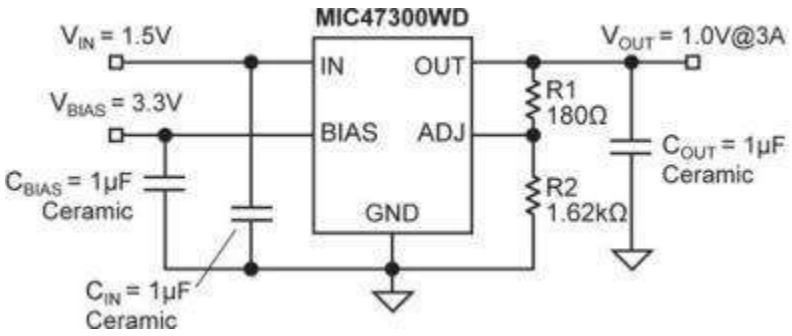

<< BACK

MIC35302

3A Low-Voltage µCap LDO

Online Datasheet

Features:

- Ideal for 3.0V to 2.5V conversion
- Stable with ceramic or tantalum capacitor
- Wide input voltage range:
  - V_{IN} : 2.25V to 6.0V
- Excellent line and load regulation specifications
- 3.0A minimum guaranteed output current
- Ideal for 2.5V to 1.8V, 1.65V, or 1.5V conversion
- 600mV maximum dropout voltage over temperature
- Logic-controlled shutdown
- Thermal shutdown and current limit protection
- Reverse leakage protection
- -40ºC to +125ºC junction temperature
- Power D-Pak package (TO-252)

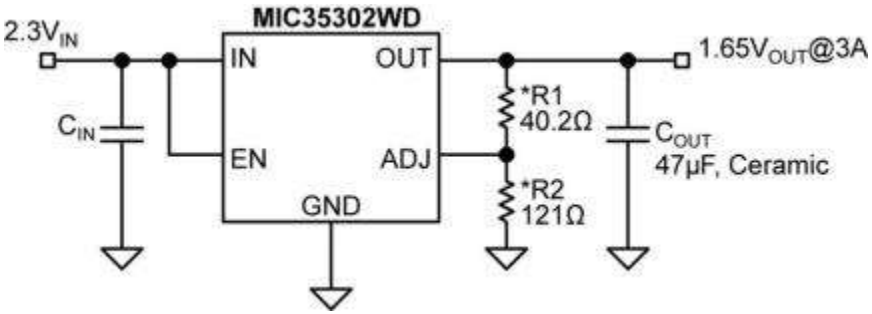

<< BACK

MIC37300/1/2/3

3.0A Low-Voltage µCap LDO

Online Datasheet

Features:

- 3.0A minimum guaranteed output current
- 500mV maximum dropout voltage over-temperature
- Ideal for 3.0V to 2.5V conversion
- Ideal for 2.5V to 1.8V, 1.65V, or 1.5V conversion
- Stable with ceramic or tantalum capacitor
- Wide input voltage range:
  - V_{IN} : 2.25V to 6.0V
  - ±1.0% initial output tolerance
- Fixed and adjustable output voltages:
  - MIC37300 3-pin fixed voltages
  - MIC37301 5-pin S-Pak or 8-pin ePad SOIC fixed –
    - voltages with flag
  - MIC37302 5-pin adjustable voltage
  - MIC37303 8-pin ePad SOIC adjustable voltage with flag
- Thermal shutdown and current limit protection
- Reverse leakage protection

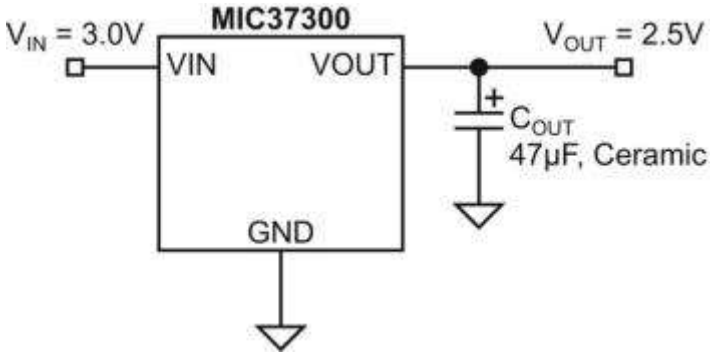

<< BACK

MIC37252

2.5A Low Voltage µCap LDO

Online Datasheet

Features:

- 2.5A minimum guaranteed output current
- Ideal for 3.3V to 1.8V conversion
- Stable with ceramic or tantalum capacitor
- ±2.0% initial output tolerance
- Dropout voltage is 550mV at 2.5A
- Excellent line and load regulation specifications
- Logic controlled shutdown
- Thermal shutdown and current limit protection
- Reverse leakage protection
- S-Pak and TO-263 packages

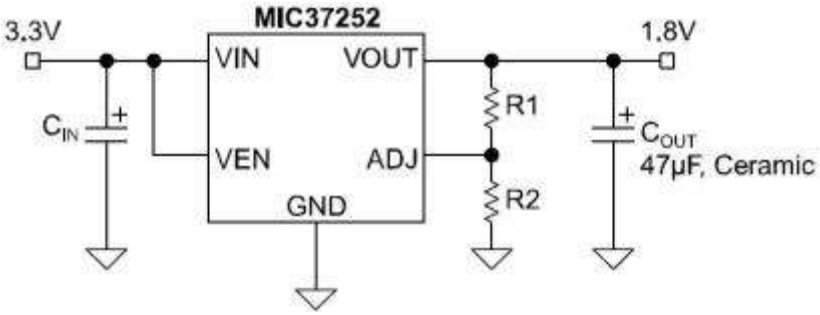

<< BACK

MIC49200

2A Low Voltage LDO with Dual Input Voltages

Online Datasheet

Features:

- Input voltage range: 2.7V to 6.0V:
  - V_{IN} : 1.4V to 6.5V
  - V_{BIAS} : 3.0V to 6.5V
- Stable with 1µF ceramic output capacitor
- ±1.0% initial output tolerance
- Maximum dropout (VIN - VOUT) is 500mV over –
  - temperature
- Adjustable output voltage down to 0.9V
- Ultra-fast transient response (up to 10MHz bandwidth)
- Excellent line and load regulation specifications
- Logic-controlled shutdown option
- Thermal shutdown and current limit protection
- Thin 5-pin S-Pak package
- -40ºC to +125ºC operating junction temperature range

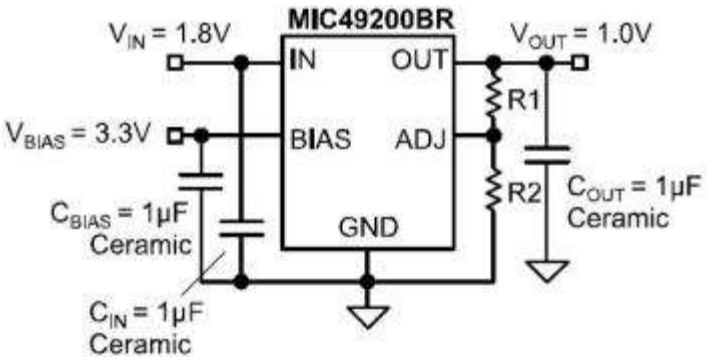

<< BACK

MIC37150/1/2/3

1.5A Low Voltage µCap LDO

Online Datasheet

Features:

- 1.5A minimum guaranteed output current
- 500mV maximum dropout voltage over –
  - temperature:
    - Ideal for 3.0V to 2.5V conversion
    - Ideal for 2.5V to 1.8V, 1.65V, or 1.5V
      - conversion
- Stable with ceramic or tantalum capacitor
- Wide input voltage range:
  - V_{IN} : 2.25V to 6.0V
- ±1.0% initial output tolerance
- Fixed and adjustable output voltages
  - MIC37150 - 3-pin fixed voltages
  - MIC37151 - 5-pin S-Pak or 8-pin ePad SOIC
- Fixed voltages with flag:
  - MIC37152 - 5-pin adjustable voltage
  - MIC37153 - 8-pin adjustable voltage with flag
- Thermal shutdown and current limit protection
- Low profile 3 or 5-pin S-Pak packages or 8-pin ePad SOIC

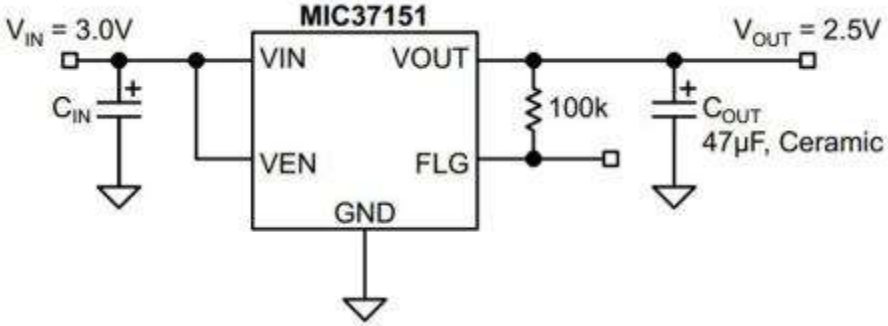

<< BACK

MIC47150

1.5A Low Voltage Adj. High-Bandwidth LDO with Dual Input Supplies

Online Datasheet

Features:

- Input voltage range:
  - V_{IN} : 1.4V to 6.5V
  - V_{BIAS} : 3.0V to 6.5V
- Stable with 1µF ceramic capacitor
- ±1% initial tolerance
- Maximum dropout voltage (VIN–VOUT) of 500mV over temperature
- Adjustable output voltage down to 0.9V
- Ultra fast transient response (up to 10MHz bandwidth)
- Excellent line and load regulation specifications
- Power D-Pak package (TO-252)
- Thermal shutdown and current limit protection
- Junction temperature range: -40ºC to +125ºC

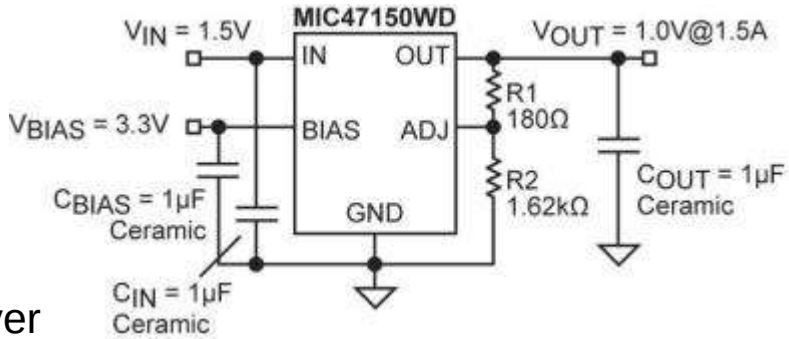

<< BACK

MIC49150

1.5A Low Voltage LDO with Dual Input Voltages

Online Datasheet

Features:

- Input voltage range:
  - V_{IN} : 1.4V to 6.5V
  - V_{BIAS} : 3.0V to 6.5V
- Stable with 1µF ceramic capacitor
- ±1% initial tolerance
- Maximum dropout voltage (VIN-VOUT) of –
  - 500mV over temperature
- Adjustable output voltage down to 0.9V
- Ultra fast transient response (up to 10MHz bandwidth)
- Excellent line and load regulation specifications
- Logic-controlled shutdown option
- Thermal shutdown and current limit protection
- Power MSOP-8 and S-Pak packages
- Junction temperature range: -40ºC to +125ºC

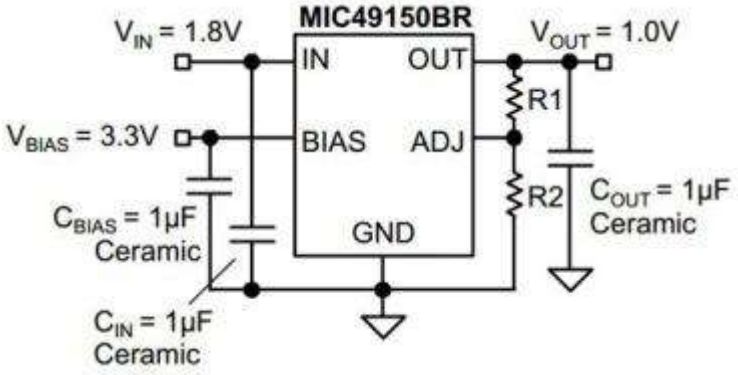

<< BACK

MIC37100/1/2

1A Low-Voltage µCap LDO

Online Datasheet

Features:

- Fixed and adjustable output voltages to 1.24V
- µCap Regulator, 10µF ceramic output capacitor -- stable
- 280mV typical dropout at 1A:
  - Ideal for 3.0V to 2.5V conversion
  - Ideal for 2.5V to 1.8V, 1.65V, or 1.5V - conversion
- 1A minimum guaranteed output current
- 1% initial accuracy
- Low ground current
- Current limiting and thermal shutdown
- Reverse leakage protection
- Fast transient response
- Low-profile SOT-223 package
- Power SO-8 package
- S-PAK package (MIC37102 only)

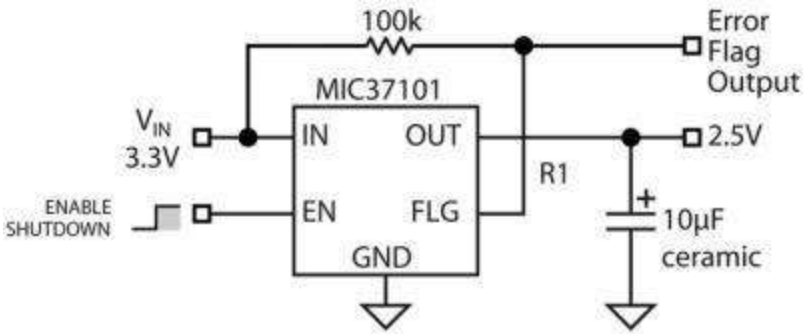

<< BACK

MIC3775

750mA µCap Low-Voltage LDO

Online Datasheet

Features:

- Fixed and adjustable output voltages to 1.24V
- 280mV typical dropout at 750mA:
  - Ideal for 3.0V to 2.5V conversion
  - Ideal for 2.5V to 1.8V or 1.65V conversion
- Stable with ceramic capacitor
- 750mA minimum guaranteed output current
- 1% initial accuracy
- Low ground current
- Current limiting and thermal shutdown
- Reverse leakage protection
- Fast transient response
- Low-profile power MSOP-8 package

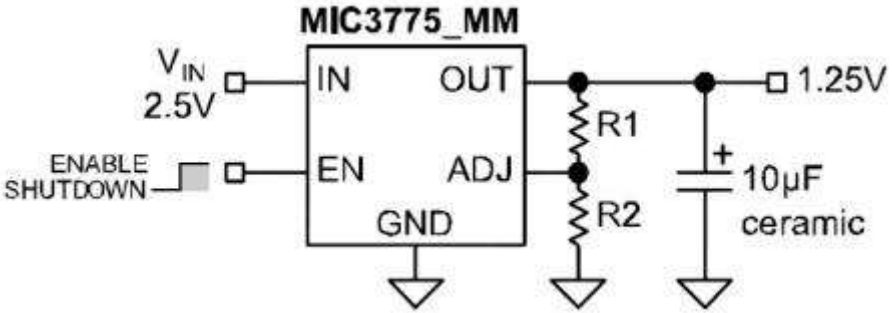

<< BACK

MIC5353

500mA LDO in 1.6mm x 1.6mm Package

Online Datasheet

Features:

- 500mA guaranteed output current
- Input voltage range: 2.6V to 6V
- Ultra-low dropout voltage: 160mV at 500mA
- ±2% initial accuracy
- Ultra-low output noise: 30µVrms
- Low quiescent current: 90µA
- Stable with ceramic output capacitors
- 35µs turn-on time
- Thermal shutdown and current limit protection
- Tiny 6-pin 1.6mm x 1.6mm Thin MLF® lead-less package

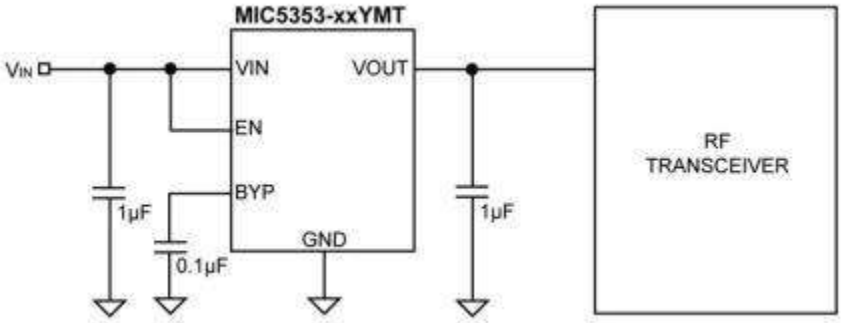

<< BACK

MIC5249

300mA µCap LDO with Programmable Power-On Reset Delay

Online Datasheet

Features:

- 300mA output current
- High PSRR: 65dB at 120Hz
- Stable with ceramic output capacitor
- Power-on reset output with adjustable delay time
- High output accuracy:
  - ±1.0% initial accuracy
  - ±3.0% over temperature
- Low dropout voltage: 400mV at 300mA
- Low quiescent current: 85mA
- Zero off-mode current state
- Thermal shutdown protection
- Current limit protection
- Tiny MSOP-8 package

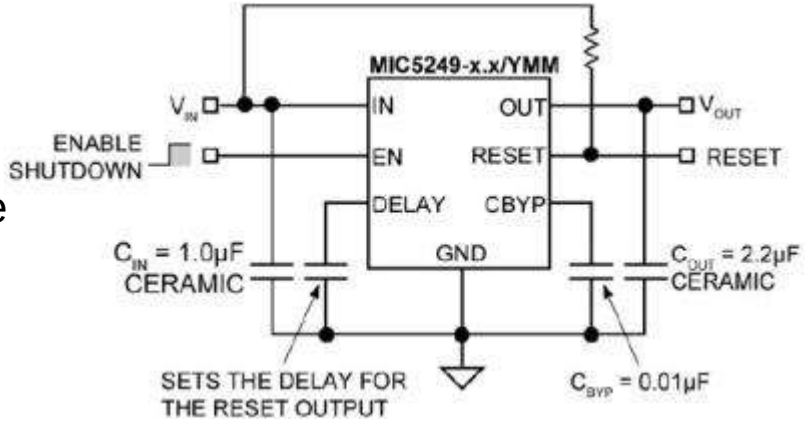

<< BACK

MIC5259

300mA High PSRR Low Noise µCap CMOS LDO

Online Datasheet

Features:

- Input voltage range: 2.7V to 6.0V
- PSRR: 70dB at 1kHz
- Low output noise: 30µVrms
- Stability with ceramic output capacitors
- Low dropout: 300mV at 300mA
- High output accuracy:
  - 1.5% initial accuracy
  - 3.0% over temperature
- Low quiescent current: 105µA
- Tight load and line regulation
- TTL logic-controlled enable input
- Zero off-mode current state
- Thermal shutdown and current limit protection

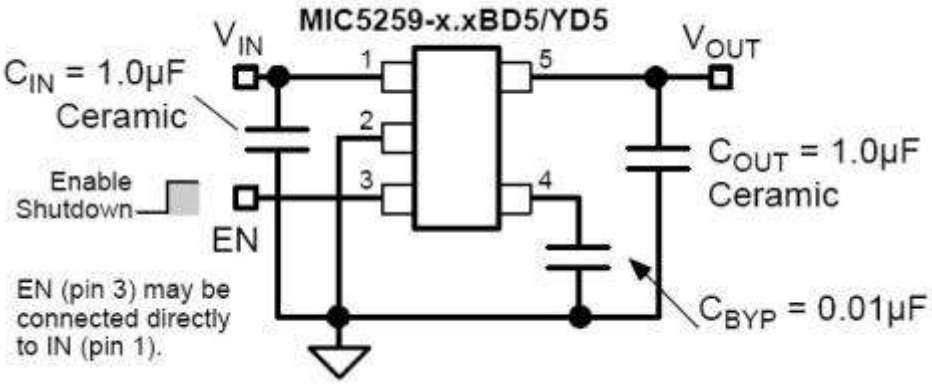

<< BACK

MIC5318

High Performance 300mA µCap ULDO

Online Datasheet

Features:

- Ultra-low dropout voltage: 110mV at 300mA
- Input voltage range: 2.3V to 6.0V
- 300mA guaranteed output current
- Stable with ceramic output capacitors
- Ultra-low output noise: 30µVrms
- Low quiescent current: 85µA total
- High PSRR: >70dB at 1kHz
- Less than 35µs turn-on time
- High output accuracy:
- ± 2% initial accuracy
- ± 3% over temperature
- Thermal shutdown and current limit protection
- Tiny 6-pin 1.6mm x 1.6mm Thin MLF® package
- Thin SOT23-5 package

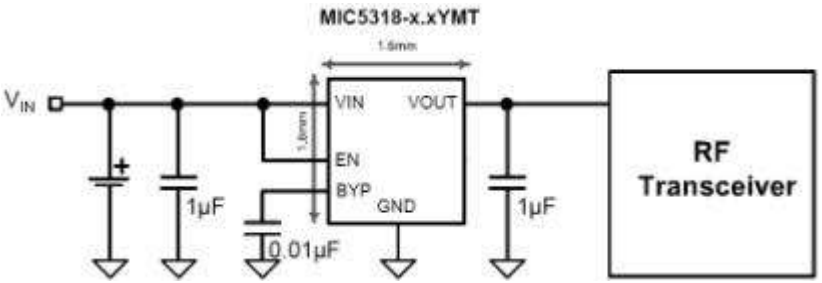

<< BACK

MIC5247

150mA Low-Voltage µCap LDO

Online Datasheet

Features:

- Ultra-low noise
- Low voltage outputs
- Load-independent, ultra-low ground current: 85mA
- 150mA output current
- Current limiting
- Thermal shutdown
- Tight load and line regulation
- Zero off-mode current
- Stability with low-ESR capacitors
- Fast transient response
- Logic-controlled enable input

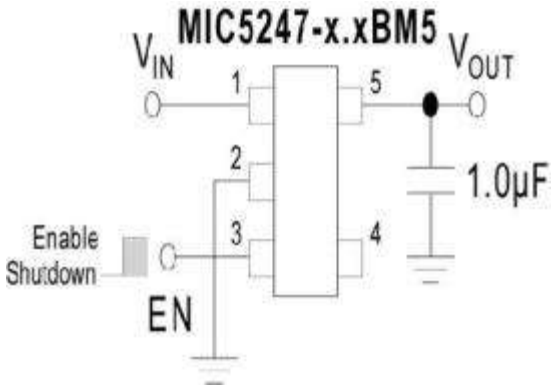

<< BACK

MIC5248

150mA µCap CMOS LDO with Power Good

Online Datasheet

Features:

- Power Good indicator
- Load-independent, ultra-low ground current: 100µA
- 150mA output current
- Current limiting
- Thermal shutdown
- Tight load and line regulation
- Zero off-mode current
- Stability with low-ESR capacitors
- Fast transient response
- TTL logic-controlled enable input

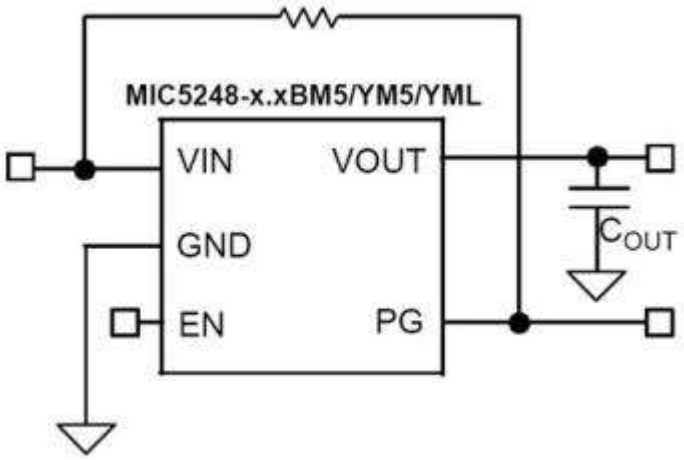

<< BACK

MIC5238

Ultra-Low Quiescent Current 150mA µCap LDO

Online Datasheet

Features:

- Ultra-low input voltage range: 1.5V to 6V
- Low dropout voltage: 310mV at 150mA
- High output accuracy: ±2.0% over temperature
- µCap: stable with ceramic or tantalum capacitors
- Excellent line and load regulation specifications
- Zero off-mode current
- Ultra-low output voltage: 1.1V minimum output voltage
- Reverse leakage protection
- Thermal shutdown and current limit protection
- IttyBitty® SOT-23-5 package

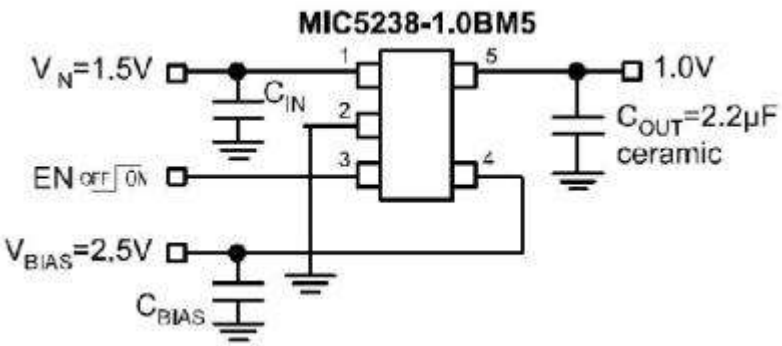

<< BACK

MIC5252

150mA High PSRR Low Noise µCap CMOS LDO

Online Datasheet

Features:

- Input voltage range: 2.7V to 6.0V
- PSRR equals 50dB at VO + 0.3V
- Ultra-low output noise: 30µVrms
- Stability with ceramic output capacitors
- Ultra-low dropout: 135mV at 150mA
- High output accuracy:
  - 1.0% initial accuracy
  - 2.0% over temperature
- Low quiescent current: 90µA
- Tight load and line regulation
- TTL logic-controlled enable input
- Zero off-mode current
- Thermal shutdown and current limit protection

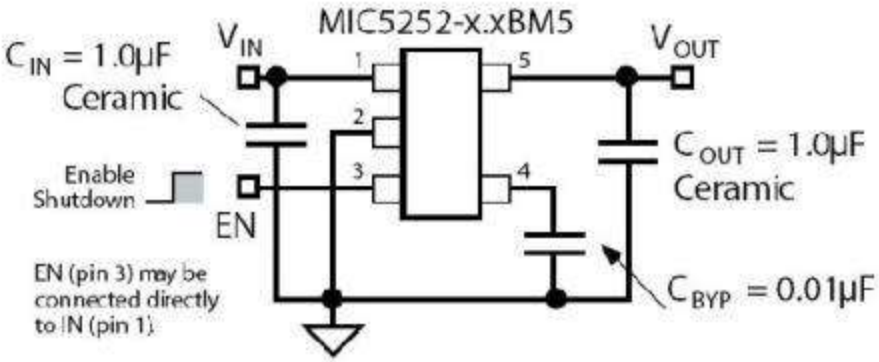

<< BACK

MIC5255

150mA Low Noise µCap CMOS LDO

Online Datasheet

Features:

- Input voltage range: 2.7V to 6.0V
- Thin SOT package: 1mm height SOT-23-5
- Ultra-low output noise: 30µV(rms)
- Stability with ceramic output capacitors
- Ultra-low dropout: 135mV at 150mA
- High output accuracy:
  - 1.0% initial accuracy
  - 2.0% over temperature
- Low quiescent current: 90µA
- Tight load and line regulation
- TTL logic-controlled enable input
- Zero off-mode current
- Thermal shutdown and current limit protection

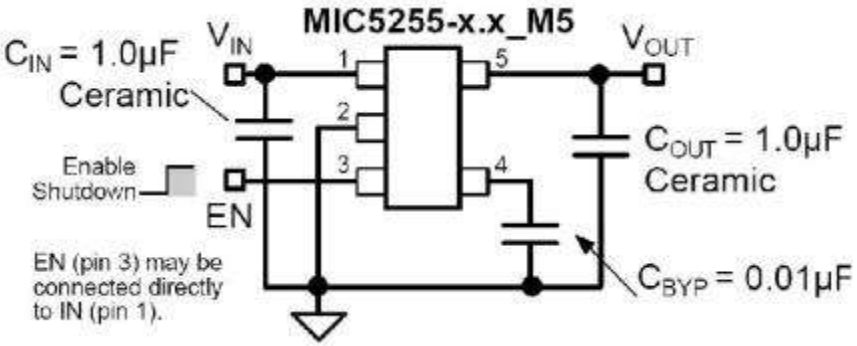

<< BACK

MIC5256

150mA µCap LDO with Error Flag

Online Datasheet

Features:

- Input voltage range: 2.7V to 6.0V
- Thin SOT package: 1mm height
- Error flag indicates fault condition
- Stable with ceramic output capacitor
- Ultra-low dropout: 135mV at 150mA
- High output accuracy:
  - 1.0% initial accuracy
  - 2.0% over temperature
- Low quiescent current: 90µA
- Tight load and line regulation
- Thermal shutdown and current limit protection
- Zero off-mode current
- TTL logic-controlled enable input

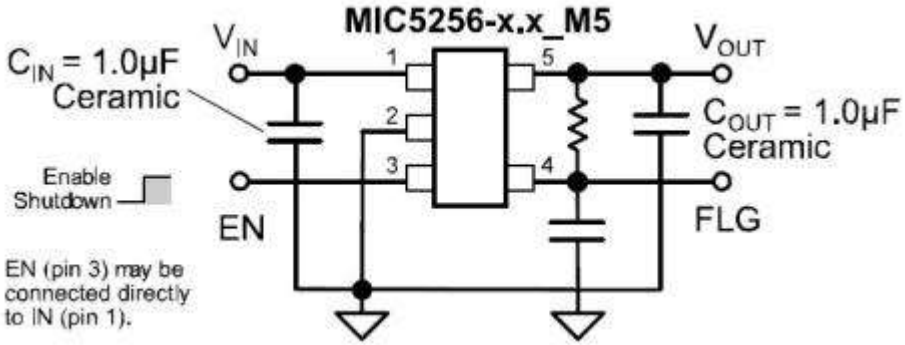

<< BACK

MIC5258

150mA µCap CMOS LDO with Power Good

Online Datasheet

Features:

- Power Good indicator
- Load-independent, ultra-low ground current: 100mA
- 150mA output current
- Current limiting
- Thermal shutdown
- Tight load and line regulation
- Zero off-mode current
- Stability with low-ESR capacitors
- Fast transient response
- TTL logic-controlled enable input

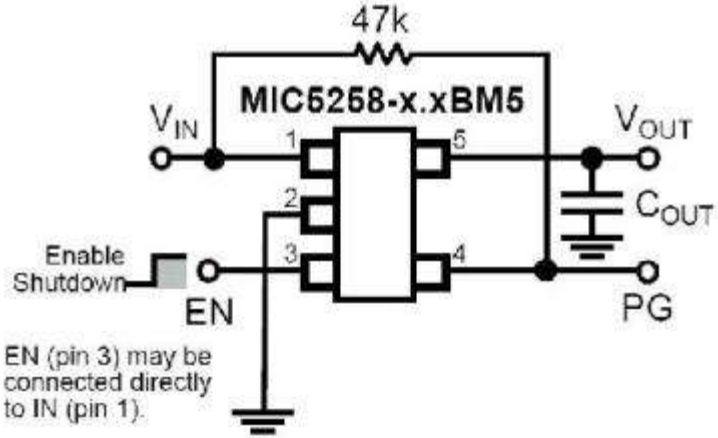

<< BACK

MIC5268

150mA µCap CMOS LDO with Power Good

Online Datasheet

Features:

- Power Good indicator
- Load-independent, ultra-low ground current: 100mA
- 150mA output current
- Current limiting
- Thermal shutdown
- Tight load and line regulation
- Zero off-mode current
- Stability with low-ESR capacitors
- Fast transient response
- TTL logic-controlled enable input

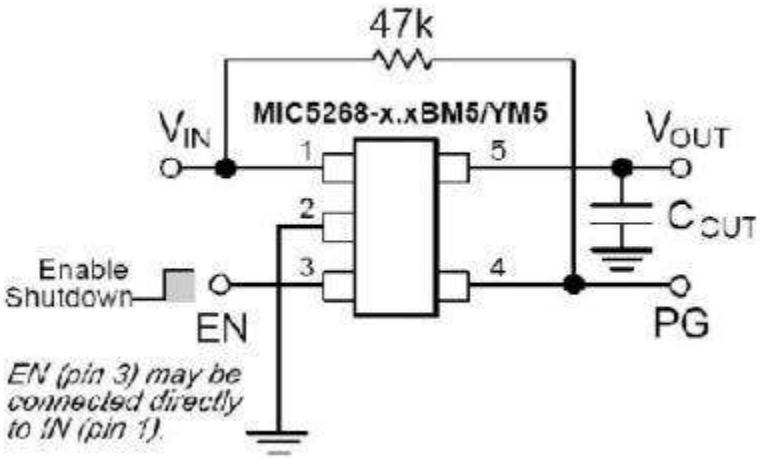

<< BACK

MIC5317

High-Performance Single 150mA LDO

Online Datasheet

Features:

- Tiny 1mm × 1mm Thin DFN, SOT23-5 and –
  - TSOT23-5 packages
- Wide 2.5V to 6V operating range
- 150mA guaranteed output current
- Stable with 1µF ceramic output capacitors
- Low dropout voltage: 155mV @ 150mA
- Excellent load/line transient response
- Low quiescent current: 29µA
- High PSRR: 70dB
- Thermal-shutdown and current-limit protection

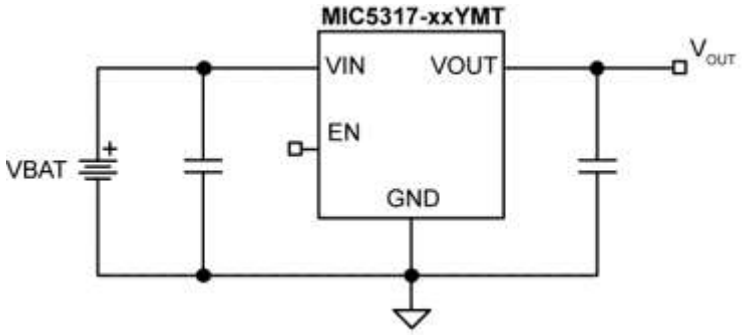

<< BACK

MIC5232

10mA Ultra-Low Quiescent Current µCap LDO

Online Datasheet

Features:

- Input voltage range: 2.7V to 7.0V
- Ultra-low Iq: Only 1.8µA operating current
- Stable with 0.47µF ceramic output capacitor
- Low dropout voltage of 100mV at 10mA
- Reverse Battery Protection
- High output accuracy:
  - +2.0% initial accuracy
  - +3.0% over temperature
- Logic-Level Enable Input
- Miniature 6-pin 2mm x 2mm MLF® package
- Lead-Free Thin SOT-23-5 Package
- Tight Load and Line Regulation

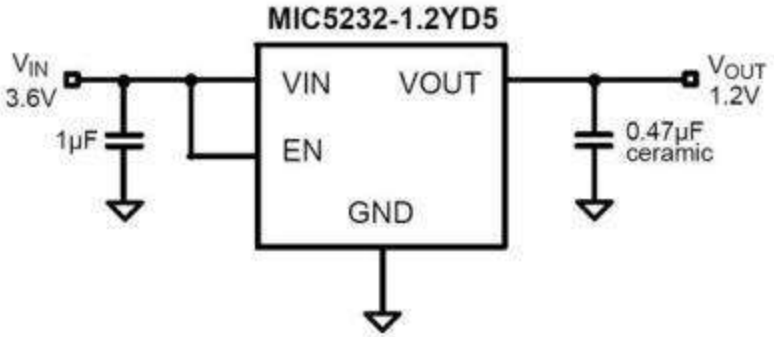

<< BACK

MIC69502

5A Low V_{IN} & Low V_{OUT} µCap LDO

Online Datasheet

Features:

- Input voltage range: VIN: 1.65V to 5.5V
- ±1.0% initial output tolerance
- Adjustable output voltage down to 0.5V
- Max. dropout (VIN - VOUT) of 500mV over –
  - temperature
- Stable with 10µF ceramic output capacitor (5A)
- Excellent line and load regulation specifications
- Logic controlled shutdown
- Thermal shutdown and current limit protection
- 7-Pin S-Pak package
- -40ºC to +125ºC temperature junction

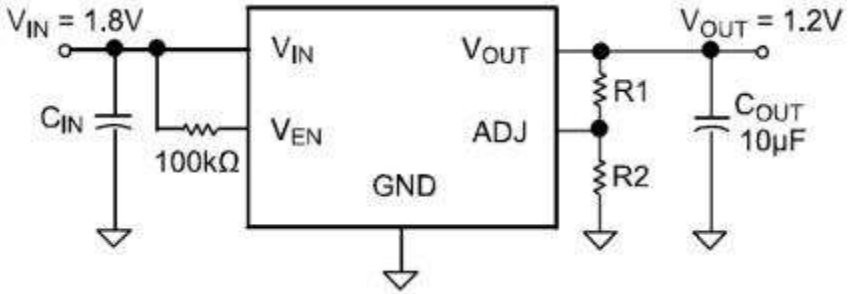

<< BACK

MIC68400

4A Sequencing LDO with Tracking and Ramp Control™

Online Datasheet

Features:

- Stable with 10µF ceramic capacitor
- Input voltage range: 1.65V to 5.5V
- ±2.0% output tolerance over temperature
- 4A maximum output current - peak start up
- 3A continuous operating current
- Timing controlled sequencing on/off
- Tiny 4mm x 4mm MLF® package
- Fixed and adjustable output voltages
- Maximum dropout (VIN – VOUT) of 500mV –
  - over temperature at 3A output current
- Thermal shutdown and current limit protection
- Programmable Ramp Control™ for:
  - In-rush current limiting
  - Slew rate control of the output voltage
- Single Master can control multiple Slave –
  - regulators with tracking output voltages

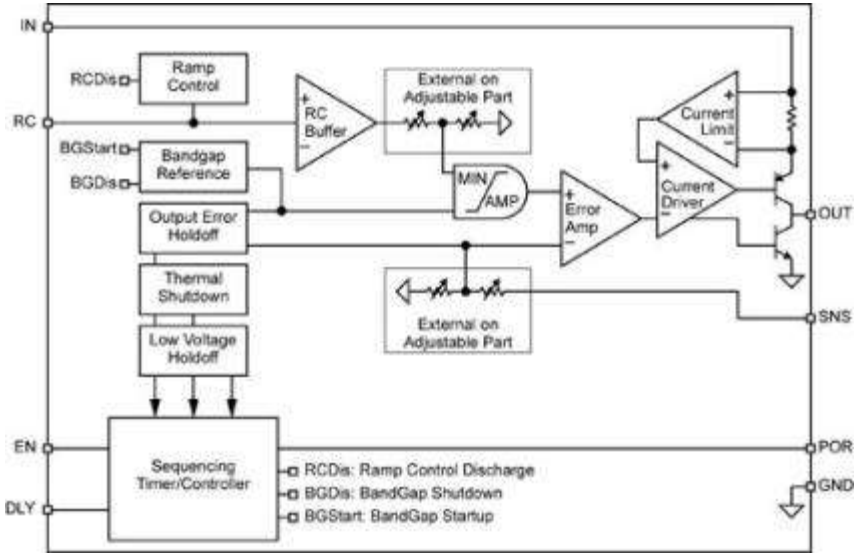

<< BACK

MIC68401

4A Sequencing LDO with Tracking and Ramp Control™

Online Datasheet

Features:

- Stable with 10µF ceramic capacitor
- Input voltage range: 1.65V to 5.5V
- Low 0.5V reference voltage
- ±2.0% output tolerance over temperature
- 4A output current
- Timing-controlled sequencing on/off
- Programmable Ramp Control™ for:
  - In-rush current limiting
  - Slew rate control of the output voltage
- Power-on-reset (POR) supervisor
  - Programmable delay time
- Single master can control multiple slave regulators –
  - with tracking output voltages
- Small 4mm × 4mm QFN package
- Maximum dropout (VIN – VOUT) of 500mV over –
  - temperature at 3A output current
- Fixed and adjustable output voltages

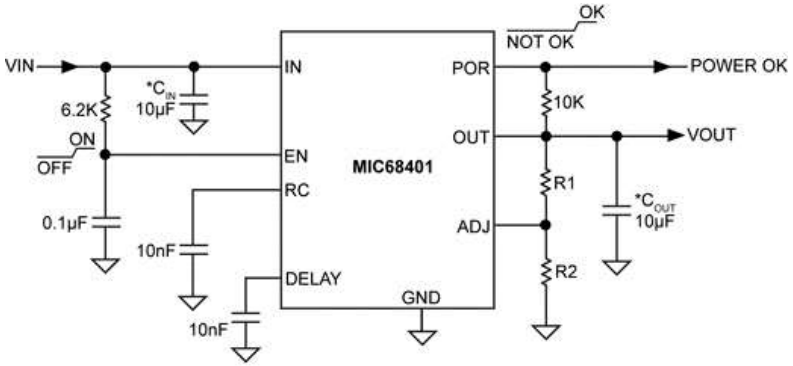

*MINIMUM CAPACITANCE. FOR GUIDANCE ON THE VALUE OF C_{IN} AND C_{OUT}, PLEASE REFER TO THE APPLICATIONS INFORMATION SECTION

<< BACK

MIC69301/2/3

Single Supply Low V_{IN} & Low V_{OUT} 3A LDO

Online Datasheet

Features:

- Input voltage range: VIN: 1.65V to 5.5V
- Adjustable output voltage down to 0.5V
- Stable with 10µF ceramic output capacitor
- Maximum dropout (VIN - VOUT) of 500mV over –
  - temperature
- Excellent line and load regulation
- Logic controlled shutdown
- Thermal shutdown and current limit protection
- Error flag output
- 5-Pin TO-263
- 5-Pin S-Pak package
- ePad SOIC-8 package
- 12-Pin 4mm x 4mm MLF® package (MIC69303 only)
- -40ºC to +125ºC junction temperature range

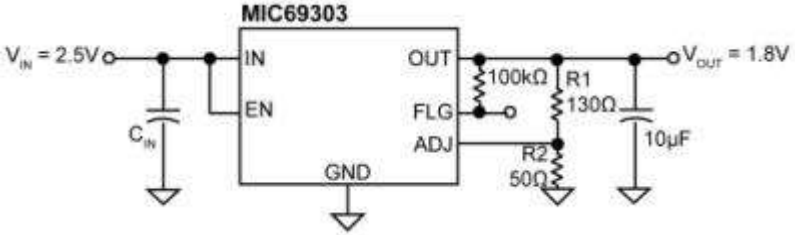

<< BACK

MIC68200

2A Sequencing LDO with Tracking and Ramp Control™

Online Datasheet

Features:

- Stable with 4.7µF ceramic capacitor
- Input voltage range: 1.65V to 5.5V
- ±1.0% initial output tolerance
- 2A maximum output current
- 1A continuous operating current
- Tiny 3mm x 3mm MLF® package
- Programmable Ramp Control™ for:
  - In-rush current limiting
  - Slew rate control of the output voltage
- Power-on reset (POR) supervisor
  - Programmable delay time
- Single master can control multiple slave –
  - regulators with tracking output voltages
- Maximum dropout (VIN – VOUT) of 500mV –
  - over temperature at 1A output current
- Fixed and adjustable output voltages
- Thermal shutdown and current limit protection

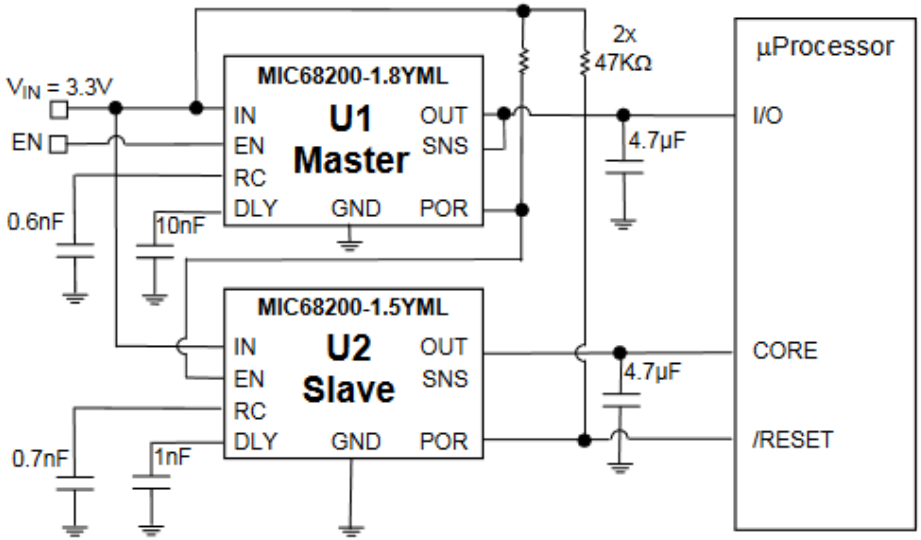

<< BACK

MIC69153

Single Supply Low V_{IN} & Low V_{OUT} 1.5A LDO

Online Datasheet

Features:

- Adjustable output voltage down to 0.5V
- Stable with 10µF ceramic output capacitor
- 10-Pin 3mm x 3mm MLF® package
- Thermal shutdown and current limit protection
- Single input voltage range: VIN: 1.65V to 5.5V
- -40ºC to +125ºC junction temperature
- Excellent line and load regulation specifications
- Logic controlled shutdown
- Maximum dropout (VIN – VOUT) of 500mV over temperature

<< BACK

MIC69101/3

Single Supply Low V_{IN} & Low V_{OUT} 1A LDO

Online Datasheet

Features:

- Adjustable output voltage down to 0.5V
- Stable with 4.7µF ceramic output capacitor
- Excellent line and load regulation specifications
- Logic-controlled shutdown
- Single input voltage range: VIN: 1.65V to 5.5V
- Maximum dropout (VIN – VOUT) of 500mV over –
  - temperature
- Thermal shutdown and current limit protection
- 10-Pin 3mm x 3mm MLF® package
- -40ºC to +125ºC junction temperature

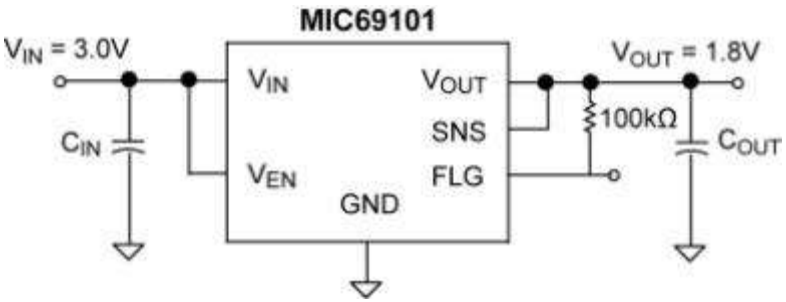

<< BACK

MIC5319

500mA µCap Ultra-Low Dropout High PSRR LDO

Online Datasheet

Features:

- Ultra-low dropout voltage 200mV @ 500mA
- Input voltage range: 2.5 to 5.5V
- Stable with ceramic output capacitor
- Low output noise 30µVrms
- Low quiescent current of 90µA total
- High PSRR, up to 70dB @1kHz
- Fast turn-on-time 40µs typical
- High output accuracy:
  - ±1.0% initial accuracy
  - ±2.0% over temperature
- Thermal shutdown protection
- Tiny 2mm x 2mm MLF® package, 500mA continuous
- Thin SOT-23-5 package, 500mA peak

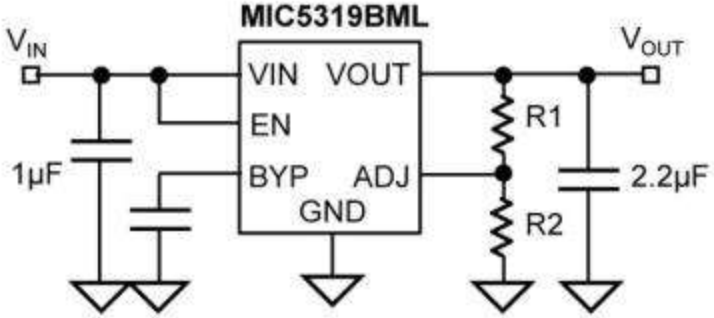

<< BACK

MIC5524

High-Performance 500mA LDO in Thin DFN

Online Datasheet

Features:

- Input voltage range: 2.5V to 5.5V
- Fixed output voltages down to 1.0V
- 500mA guaranteed output current
- High output initial accuracy (±1%)
- High PSRR: 80dB
- Low quiescent current: 38µA
- Stable with 2.2µF ceramic output capacitors
- Low dropout voltage: 260mV @ 500mA
- Auto-discharge and internal enable pulldown
- Thermal-shutdown and current-limit protection
- 4-pin 1mm x 1mm Thin DFN package

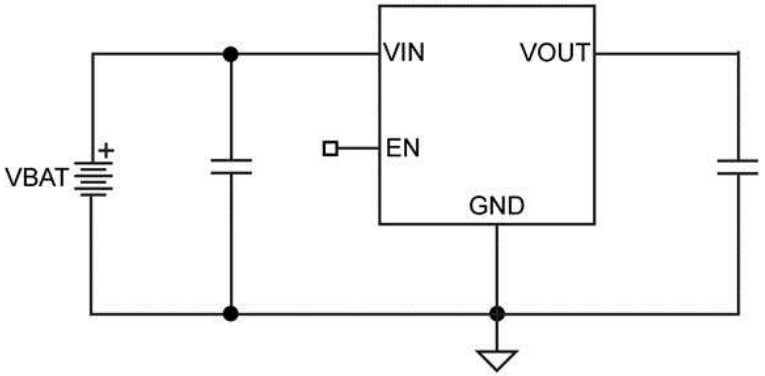

<< BACK

MIC5528

High-Performance 500mA LDO in Thin DFN

Online Datasheet

Features:

- Input voltage range: 2.5V to 5.5V
- Fixed output voltages down to 1.0V
- ±2% Room temperature accuracy
- Low quiescent current: 38µA
- Stable with 2.2µF ceramic output capacitors
- Low dropout voltage: 260mV @ 500mA
- Auto-discharge and internal enable pulldown
- Thermal-shutdown and current-limit protection
- 6-pin 1.2mm x 1.2mm extra thin DFN package
- 6-pin 1.2mm x 1.2mm thin DFN package

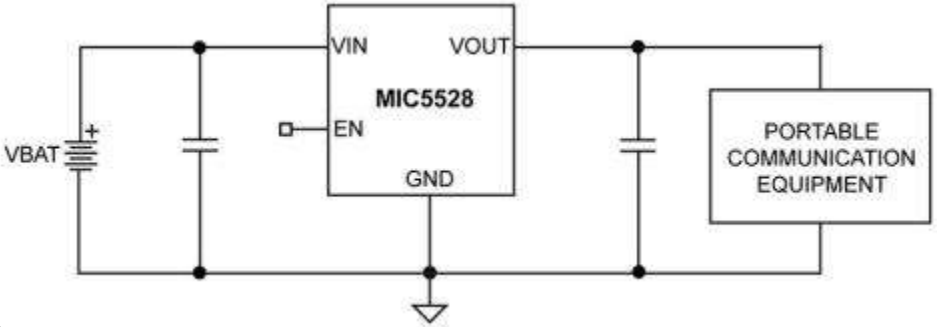

<< BACK

MIC5325

Low V_{IN}/V_{OUT} 400mA ULDO with Ultra-Low I_Q

Online Datasheet

Features:

- Wide input voltage range: 1.7V to 5.5V
- Very fast transient response
- Bias supply voltage range: 2.5V to 5.5V
- Ultra-low ground current: 35 µA typical
- 400mA maximum output current per LDO
- Thermal shutdown and current limit protection
- Tiny 6-pin 2mm x 2mm Thin MLF® package
- Ultra-low dropout voltage ULDO™: 110mV at 400mA
- Stable with 1µF ceramic output capacitor
- ±2% voltage accuracy over temperature
- Adjustable output voltage range: 0.8V to 2.0V

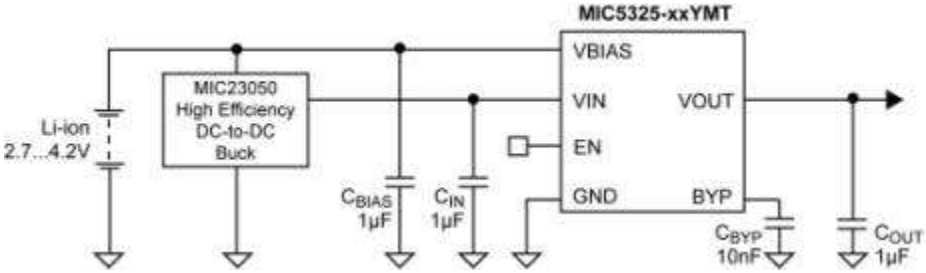

<< BACK

MIC5323

Low V_{IN}/V_{OUT} 400mA ULDO with Ultra-Low I_Q

Online Datasheet

Features:

- Input voltage range: 2.65 to 5.5V
- Stable with ceramic output capacitor
- Ultra-low dropout voltage of 120mV at 300mA
- 300mA guaranteed output current
- Low output noise: 20µVrms
- High PSRR: up to 80dB at 1kHz
- Less than 30µs turn-on time with CBYP = 0.1µF
- High output accuracy: ±2.0% over temperature
- Thermal shutdown protection
- Current limit protection
- 6-pin 2mm × 2mm Thin MLF® package
- Thin SOT-23-5 package

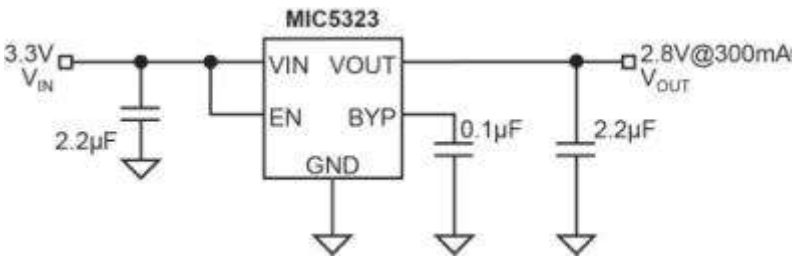

<< BACK

MIC5363/4

High-PSRR 300mA µCap LDO in 1.2mm × 1.2mm Thin MLF®

Online Datasheet

Features:

- 2.5V to 5.5V input voltage range
- 300mA output
- High output accuracy: ±2%
- Low quiescent current: typically 38µA
- Stable with 1µF ceramic capacitors
- High PSRR: 70dB at 1kHz
- Low dropout voltage: 225mV at 300mA
- Thermal shutdown protection
- Current limit protection
- Active output discharge circuit: MIC5364
- 6-pin 1.2mm x 1.2mm Thin MLF® package

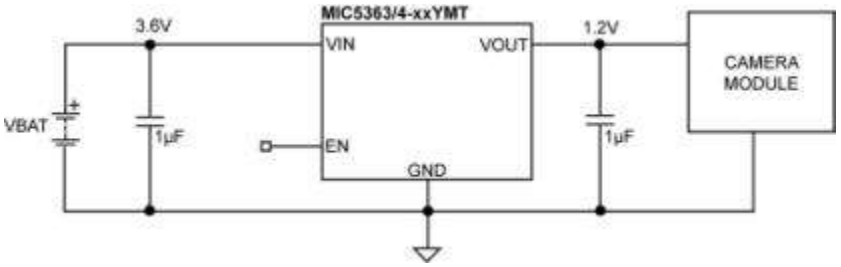

<< BACK

MIC5303

300mA Ultra-Small ULDO

Online Datasheet

Features:

- Ultra-small 1.2mm x 1.6mm Thin MLF® package
- Low dropout voltage: 100mV at 300mA
- Output noise: 120µVrms
- Input voltage range: 2.3V to 5.5V
- 300mA guaranteed output current
- Stable with ceramic output capacitors
- Low quiescent current: 85µA total
- 35µs turn-on time
- High output accuracy:
  - ±2% initial accuracy
  - ±3% over temperature
- Thermal shutdown and current limit protection

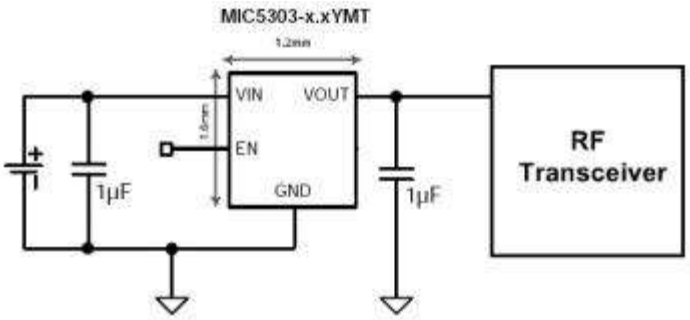

<< BACK

MIC5307

300mA Micropower µCap Baseband LDO

Online Datasheet

Features:

- Input voltage range: 2.4V to 5.5V
- Ultra-low IQ: only 20µA operating current
- Stable with ceramic output capacitor
- Low dropout voltage of 120mV at 300mA
- High output accuracy:
  - ±1.0% initial accuracy
  - ±2.0% over temperature
- Thermal shutdown protection
- Current limit protection

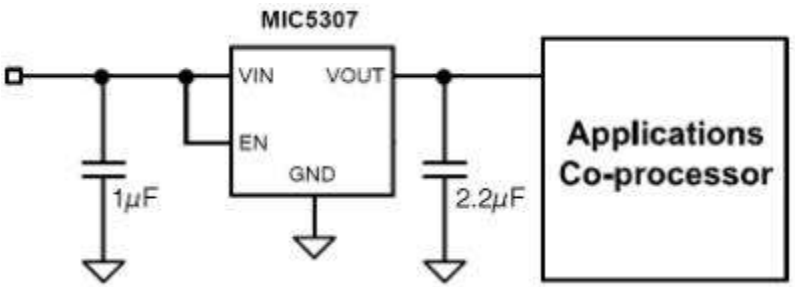

<< BACK

MIC5309

Low V_{IN} /V_{OUT} 300mA High PSRR ULDO with Ultra-Low I_Q

Online Datasheet

Features:

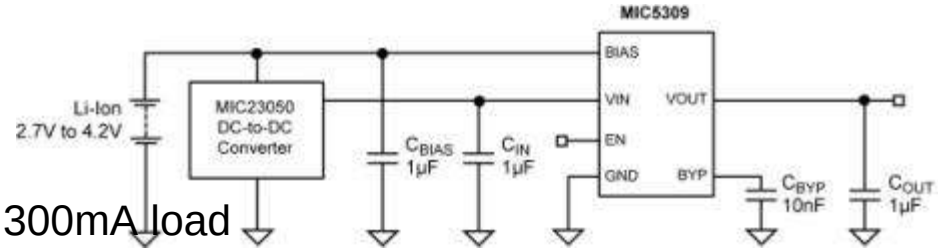

- Input voltage range: 1.7V to 5.5V
- Guaranteed 300mA over temperature
- High PSRR: up to 90dB at 1kHz
- Ultra-low dropout voltage: 100mV for typical 300mA load
- Output Voltage range: 0.8V to 2.0V
- Very low ground current: 23µA under full load
- Bias supply voltage range: 2.5V to 5.5V
- Stable with 1µF ceramic output capacitor
- 300mA maximum output current at 1.7V input voltage
- Very fast transient response ideal for digital loads
- Thermal shutdown and current limit protection
- Tiny 6-pin 1.6mm x 1.6mm Thin MLF® package
- 6-pin TSOT-23 package

<< BACK

MIC5327

300mA Low Quiescent Current LDO

Online Datasheet

Features:

- 300mA output current
- Input voltage range: 2.3V to 5.5V
- Low 24µA operating current
- Low dropout voltage of 180mV at 300mA
- Fixed output voltages
- Stable with 1µF ceramic capacitors
- Thermal shutdown and current limit protection
- Tiny 4-pin 1.2mm x 1.6mm Thin MLF® package

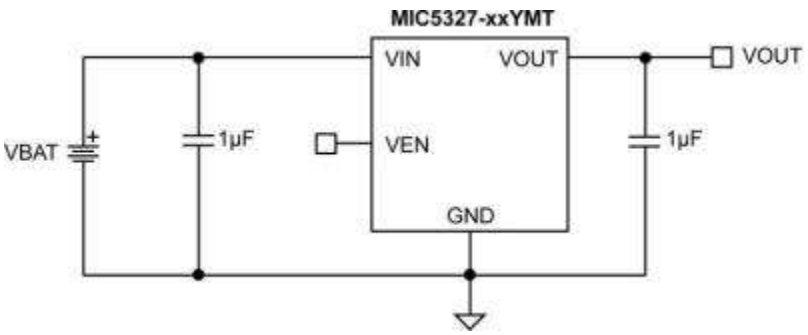

<< BACK

MIC5337

1.2x 1.6mm 300mA Low I_Q & Ultra Low Dropout LDO w/ Auto Discharge

Online Datasheet

Features:

- 300mA output current
- Low IQ: only 24µA operating current
- Low dropout voltage: 180mV at 300mA
- Active discharge when enable pin is low
- Input voltage range: 2.3V to 5.5V
- Fixed output voltages
- Stable with 1µF ceramic capacitors
- Thermal shutdown and current limit protection
- Tiny 4-pin 1.2mm x 1.6mm Thin MLF® package

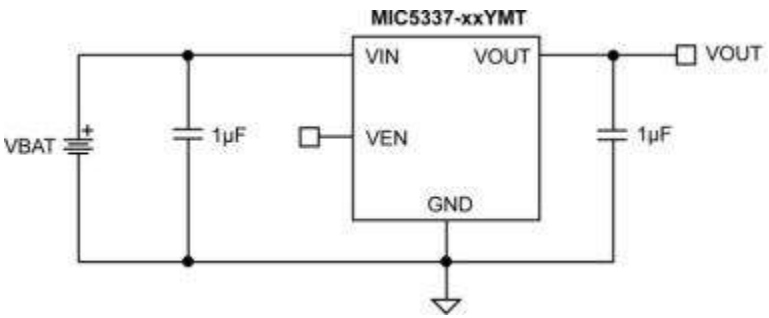

<< BACK

MIC5501/2/3/4

300mA LDO in 1.0x1.0mm DFN

Online Datasheet

Features:

- Input voltage range: 2.5V to 5.5V
- Fixed output voltages from 1.0V to 3.3V
- 300mA guaranteed output current
- High output accuracy (±2%)
- Low quiescent current: 38µA
- Stable with 1µF ceramic output capacitors
- Low dropout voltage: 160mV @ 300mA
- Output discharge circuit: MIC5502, MIC5504
- Internal enable pull-down: MIC5503, MIC5504
- Thermal-shutdown and current-limit protection
- 4-lead 1.0mm x 1.0mm Thin DFN package
- MIC5504 5-pin SOT23 package

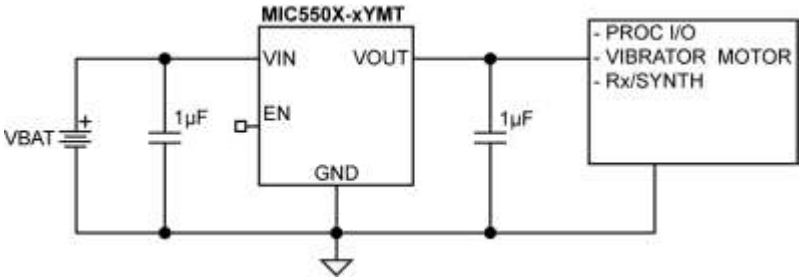

<< BACK

MIC5512/4

300mA LDO in 1.6x1.6mm Thin DFN

Online Datasheet

Features:

- Input voltage range: 2.5V to 5.5V
- Fixed output voltages from 1.0V to 3.3V
- 300mA guaranteed output current
- ±1% initial output accuracy
- Stable with 1µF ceramic output capacitors
- Low dropout voltage: 160mV @ 300mA
- Output discharge circuit
- Internal enable pull-down resistor (MIC5514)
- Available in ultra-small 6-pin 1.6mm × 1.6mm Thin DFN package

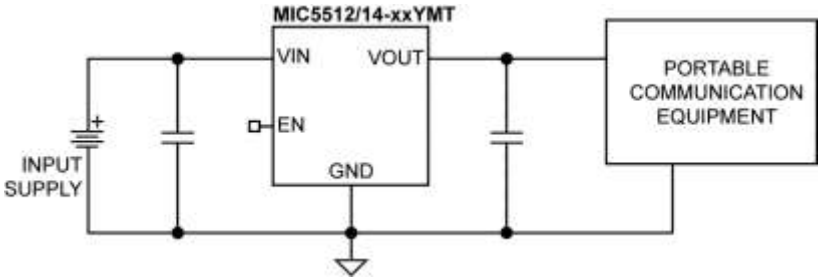

<< BACK

MAQ5300

Automotive Qualified Single Output 300mA µCap LDO

Online Datasheet

Features:

- Small 2mm × 2mm DFN package
- Low dropout voltage: 100mV at 300mA
- Output noise 120µVRMS
- Input voltage range: 2.3V to 5.5V
- 300mA guaranteed output current
- Stable with ceramic output capacitors
- Low quiescent current: 85µA total
- 30µs turn-on time
- High output accuracy:
  - ±2% initial accuracy
  - ±3% over temperature
- Thermal shutdown and current-limit protection

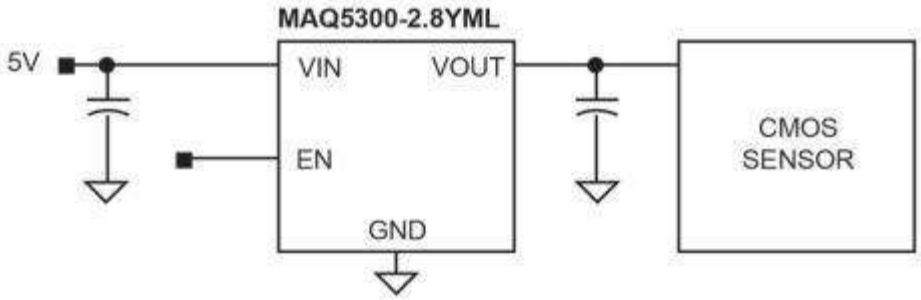

<< BACK

MIC5367/8

High Performance 200mA Peak LDO in 1.6x1.6mm Thin MLF®

Online Datasheet

Features:

- Input voltage range: 2.5V to 5.5V
- Stable with 1µF ceramic output capacitors
- Low dropout voltage: 180mV at 150mA
- Excellent load/line transient response
- Low quiescent current: 29µA
- 200mA peak (150mA continuous) output current
- High PSRR: 65dB
- Output discharge circuit -- MIC5368
- High output accuracy: ±2% initial accuracy
- Tiny 1.6mm x 1.6mm Thin MLF® package
- Thermal shutdown and current limit protection

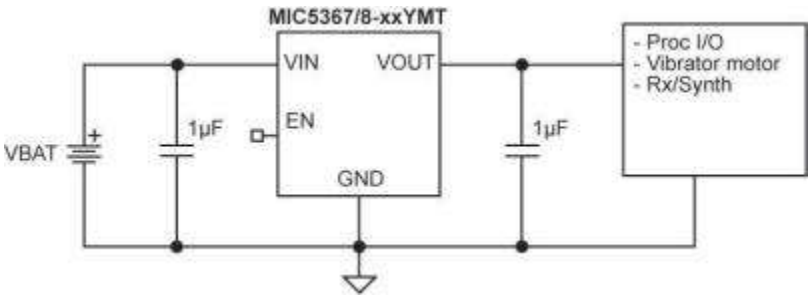

<< BACK

MIC5265

150mA µCap LDO Regulator

Online Datasheet

Features:

- 2.7V to 5.5V supply voltage
- Low 90µA quiescent current per LDO
- Thin SOT-23-5 package
- Low Noise: 57µVrms
- High PSRR: 70dB at 1kHz
- Low dropout voltage: 210mV at 150mA
- Stable with ceramic output capacitors
- Independent enable pins
- Fast transient response
- Active shutdown on both outputs

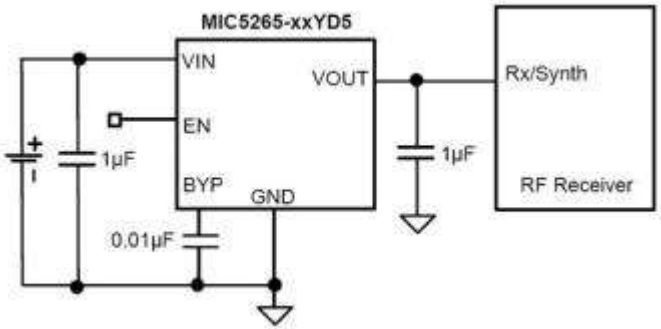

<< BACK

MIC5301

Single 150mA µCap ULDO

Online Datasheet

Features:

- Ultra-low dropout voltage: 40mV at 150mA
- Input voltage range: 2.3V to 5.5V
- 150mA guaranteed output current
- Stable with ceramic output capacitors
- Ultra-low output noise: 30µVrms
- Low quiescent current: 85µA total
- High PSRR: up to 75dB at 1kHz
- 35µs turn-on time
- High output accuracy:
  - ±2% initial accuracy
  - ±3% over temperature
- Thermal shutdown and current limit protection
- Tiny 6-pin 1.6mm x 1.6mm MLF® lead-less package

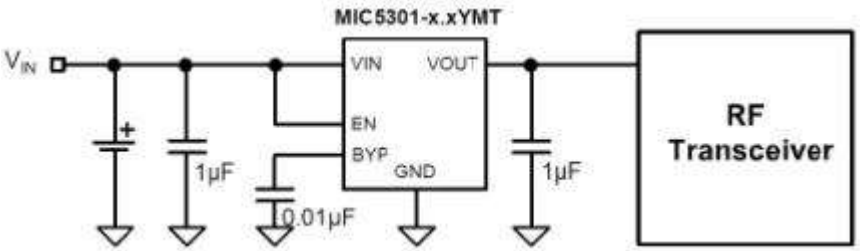

<< BACK

MIC5302

150mA ULDO in Ultra-Small 1.2x1.6mm Thin MLF®

Online Datasheet

Features:

- Ultra-small 1.2mm x 1.6mm Thin MLF® package
- Low dropout voltage: 50mV at 150mA
- Output noise: 120µVrms
- Input voltage range: 2.3V to 5.5V
- 150mA guaranteed output current
- Stable with ceramic output capacitors
- Low quiescent current: 85µA total
- 35µs turn-on time
- High output accuracy:
  - ±2% initial accuracy
  - ±3% over temperature
- Thermal shutdown and current limit protection

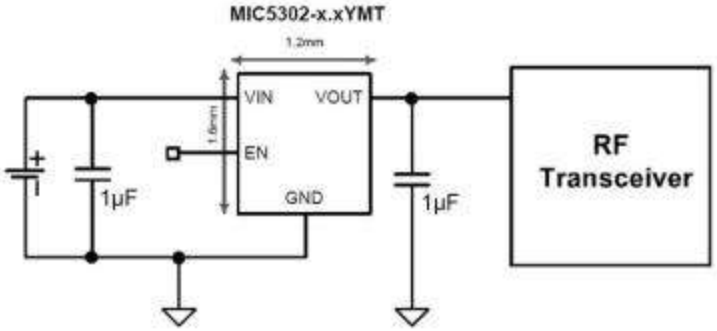

<< BACK

MIC5304

Single 150mA Low Operating Current LDO w/ Dual Voltage Pin Select

Online Datasheet

Features:

- 150mA output current
- Logic-controlled selectable output voltage
- Input voltage range: 2.3V to 5.5V
- Low 24µA operating current
- Fast transition time between selected output voltages
- Stable with 1µF ceramic capacitors
- Low dropout voltage: 85mV at 150mA
- Thermal shutdown and current limit protection
- Tiny 6-pin 1.6mm x 1.6mm Thin MLF® package

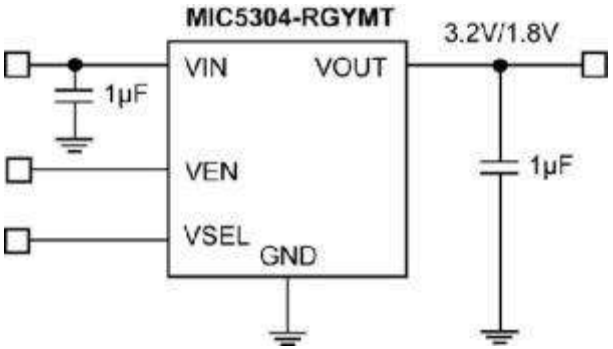

<< BACK

MIC5305

150mA µCap Ultra-Low Dropout LDO Regulator

Online Datasheet

Features:

- Ultra-low dropout voltage: 60mV at 150mA
- Input voltage range: 2.25V to 5.5V
- Stable with ceramic output capacitor
- 150mA guaranteed output current
- Low output noise: 20µVrms
- Low quiescent current: 90µA total
- High PSRR: up to 85dB at 1kHz
- Less than 30µs turn-on time w/CBYP = 0.01µF
- High output accuracy
- Thermal shutdown protection
- Current limit protection
- Tiny 6-pin 2mm x 2mm MLF® package
- Ultra-Thin 6-pin 2mm x 2mm Thin MLF® package

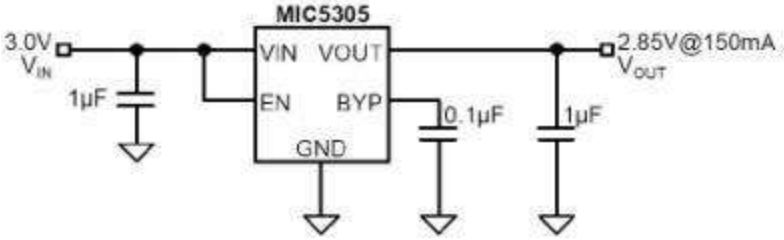

<< BACK

MIC5306

150mA Micropower µCap Baseband LDO

Online Datasheet

Features:

- Input voltage range: 2.25V to 5.5V
- Ultra-low IQ: only 16µA operating current
- Stable with ceramic output capacitor
- Low dropout voltage: 45mV at 100mA
- High output accuracy:
  - ±1.0% initial accuracy
  - ±2.0% over temperature
- Thermal shutdown protection
- Current limit protection

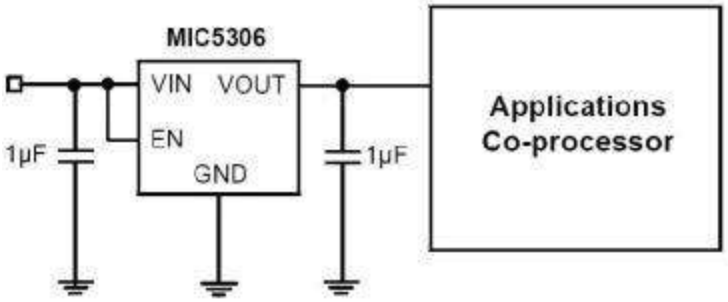

<< BACK

MIC5308

Low V_{IN} /V_{OUT} 150mA High PSRR ULDO with Ultra-Low IQ

Online Datasheet

Features:

- Input voltage range: 1.6V to 5.5V
- High PSRR: up to 90dB at 1kHz
- Guaranteed 150mA over temperature
- Ultra-low dropout voltage: 45mV at 150mA
- Output voltage range: 0.8V to 2.0V
- Very low ground current: 23µA under full load
- Bias supply voltage range: 2.5V to 5.5V
- Stable with 1µF ceramic output capacitor
- Input voltage range: 1.6V to 5.5V
- Guaranteed 150mA over temperature
- Ultra-low dropout voltage: 45mV at 150mA
- High PSRR: up to 90dB at 1kHz
- Output voltage range: 0.8V to 2.0V

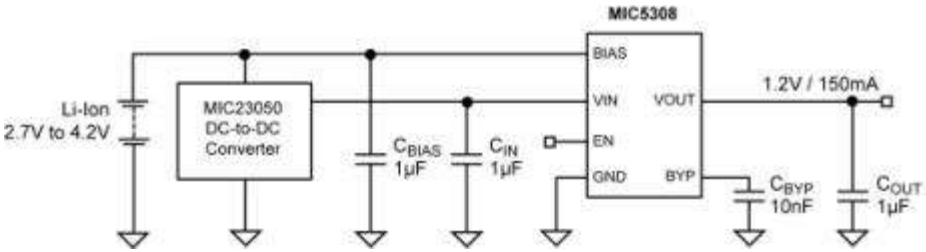

<< BACK

MIC5365/66

High Performance Single 150mA LDO

Online Datasheet

Features:

- Input voltage range: 2.5V to 5.5V
- 150mA guaranteed output current
- Stable with ceramic output capacitors
- Low dropout voltage: 180mV at 150mA
- Tiny 1mm x 1mm Thin MLF®,SC-70-5, and –
  - Thin SOT23-5 packages
- Excellent Load/Line Transient Response
- Low quiescent current: 32µA
- High PSRR: 70dB
- Output discharge circuit (MIC5366)
- High output accuracy:
  - ±2% initial accuracy
- Thermal shutdown and current limit protection

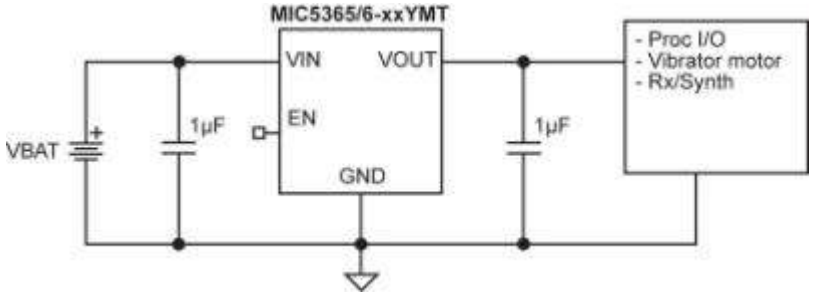

<< BACK

MIC5376/7/8

High Performance Low Dropout 150mA LDO

Online Datasheet

Features:

- Low cost 5-pin SC-70 package
- Low dropout voltage: 120mV at 150mA
- Input voltage range: 2.5V to 5.5V
- 150mA guaranteed output current
- 8-pin 1.2mm x 1.2mm Thin MLF® package
- Stable with 0402 ceramic capacitors as low as 1µF
- Low quiescent current: 29µA
- Adjustable output -- MIC5377/8
- Output discharge circuit -- MIC5376/8
- High output accuracy:
    - ±2% initial accuracy
- Thermal shutdown and current limit protection

<< BACK

MCP1810

150mA 20nA Ultra Low IQ LDO

Online Datasheet

Features:

- Ultra-Low Quiescent Current: 20 nA (typical)
- Ultra-Low Shutdown Supply Current: 1 nA (typ)
- 150 mA Output Current Capability for VR ≤ 3.5V –
  - 100 mA Output Current Capability for VR > 3.5V
- Input Operating Voltage Range: 2.5V to 5.5V
- Standard Output Voltages (VR): 1.2V, 1.8V, 2.5V, -
  - 3.0V, 3.3V, 4.2V
- Low Dropout Voltage: 380 mV max at 150 mA
- Stable with 1.0 µF Ceramic Output Capacitor
- Overcurrent Protection
- Space Saving, 8-Lead 2 x 2 mm VDFN

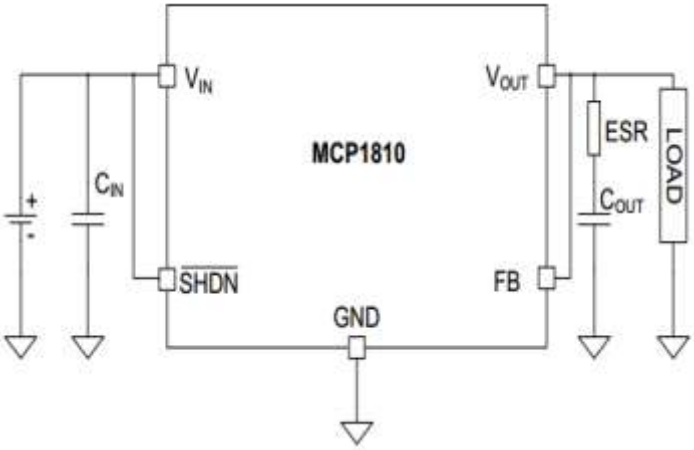

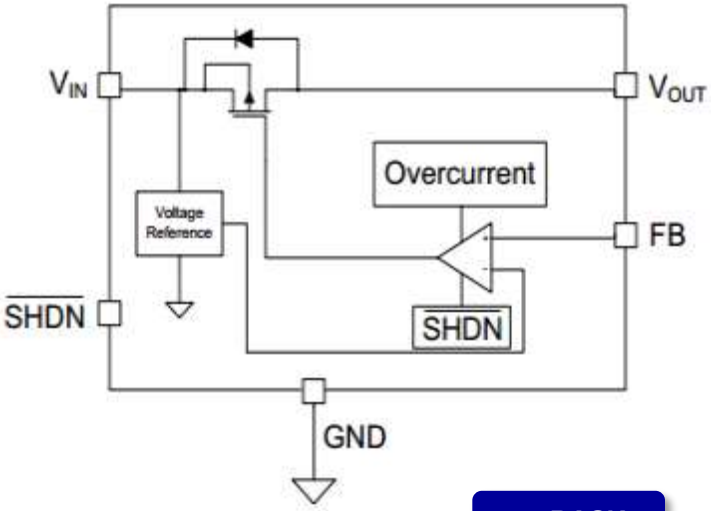

<< BACK

MIC5253

100mA Low Noise µCap Teeny™ LDO

Online Datasheet

Features:

- Input voltage range: 2.7V to 5.5V
- Teeny™ SC-70-5 package
- Ultra-low output noise: 30µVrms
- Stability with ceramic output capacitors
- 100mA continuous output current, 150mA peak current
- Ultra-low dropout: 165mV at 100mA
- High output accuracy:
  - 1.5% initial accuracy
  - 3.0% over temperature
- Low ground current 95µA
- TTL logic-controlled enable input
- Zero off-mode current
- Thermal shutdown and current limit protection

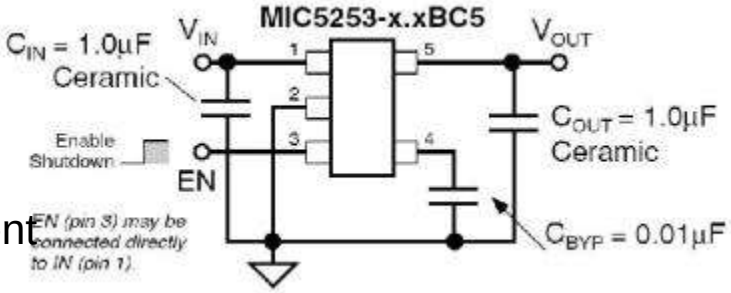

<< BACK

MIC59300

Ultra High Speed 3A LDO

Online Datasheet

Features:

- Input voltage range:
  - V_{IN} = 1.0V to 3.8V
  - V_{BIAS} = 3.0V to 5.5V
- Stable with 1µF ceramic capacitor
- ±1% initial tolerance
- Maximum dropout voltage of 500mV over temperature
- Adjustable output voltage down to 0.5V
- Ultra-fast transient response
- Logic controlled shutdown option
- Thermal shutdown and current limit protection
- -40ºC to +125ºC junction temperature range
- TO-263 and 8-pin ePad SOIC
- Pin compatible upgrade to MIC49300

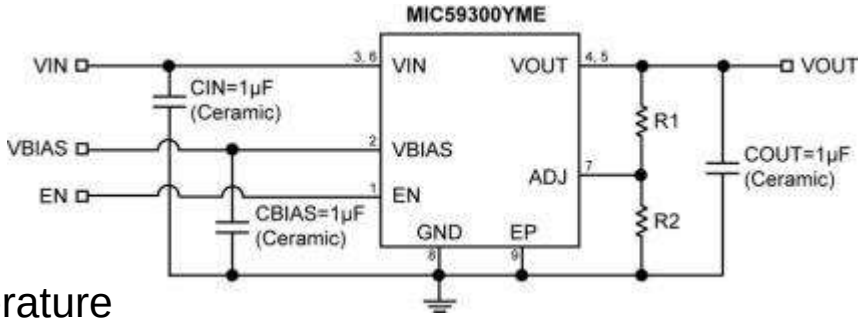

<< BACK

MIC61300

Low Input Voltage Single-Supply High-Current LDO

Online Datasheet

Features:

- Single VIN rail: 1.1V to 3.6V
- Soft-start control via external capacitor
- Typical dropout of 150mV at room temperature
- Output voltage adjustable down to 0.5V
- Soft-start control via external capacitor
- Excellent line and load regulation
- Logic controlled shutdown
- Thermal shutdown and current limit protection
- 10-pin 3mm x 3mm MLF® package
- 10-pin ePad MSOP package
- Junction temperature range from -40ºC to +125ºC
- Maximum dropout of 350mV at full load over temperature
- Soft-start control via external capacitor

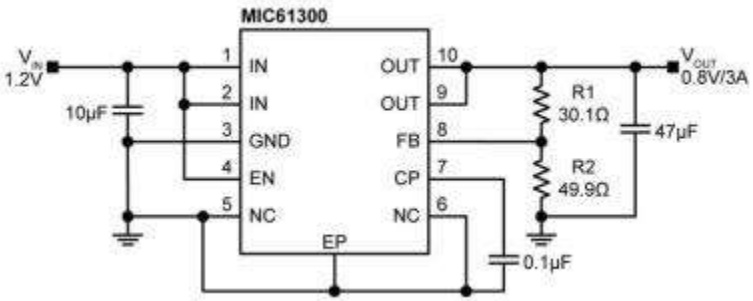

<< BACK

MIC59150

Ultra High Speed 1.5A LDO

Online Datasheet

Features:

- Input voltage range:
  - V_{IN} = 1.0V to 3.8V
  - V_{BIAS} = 3.0V to 5.5V
- Stable with 1µF ceramic capacitor
- Maximum dropout voltage of 250mV over –
  - temperature
- Adjustable output voltage down to 0.5V
- Ultra fast transient response
- Excellent line and load regulation specifications
- Logic controlled shutdown option
- Thermal shutdown and current limit protection
- Junction temperature range: -40ºC to +125ºC
- 8-pin EPAD SOIC

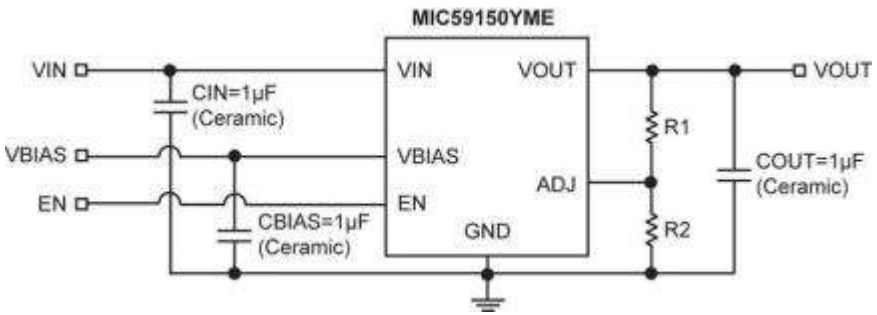

<< BACK

MIC61150

Low Input Voltage Single-Supply High-Current LDO

Online Datasheet

Features:

- Single V_{IN} rail: 1.1V to 3.6V
- Typical dropout of 75mV at room temperature
- COUT as low as 22µF (ceramic capacitor)
- Output voltage adjustable down to 0.5V
- Soft-start control via external capacitor
- Excellent line and load regulation
- Logic controlled shutdown
- Thermal shutdown and current limit protection
- 10-pin 3mm x 3mm MLF® package
- 10-pin ePad MSOP package
- Output voltage accuracy: ±2.5% over temperature
- Maximum dropout of 200mV at full load over temperature
- Junction temperature range from -40ºC to +125ºC

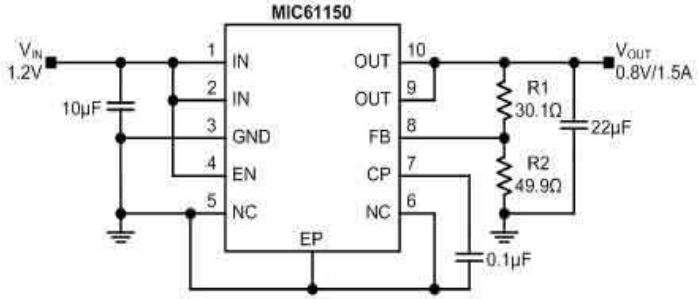

<< BACK

MIC47100

1A High Speed Low V_{IN} LDO

Online Datasheet

Features:

- Operating voltage range:
  - Input Supply: 1.0V to 3.6V
  - Bias Supply: 2.3V to 5.5V
- 0.8V to 2.0V output voltage range
- PSRR >50dB at 100kHz
- Stable with a 1µF ceramic output capacitor
- Low dropout voltage of 80mV at 1A
- High output voltage accuracy:
  - ±1.5% initial accuracy
  - ±2% over temperature
- UVLO on both supply voltages for easy turn-on
- ePad MSOP-8 -- small form factor power package
- Thermally enhanced 2mm x 2mm MLF® -- smallest solution

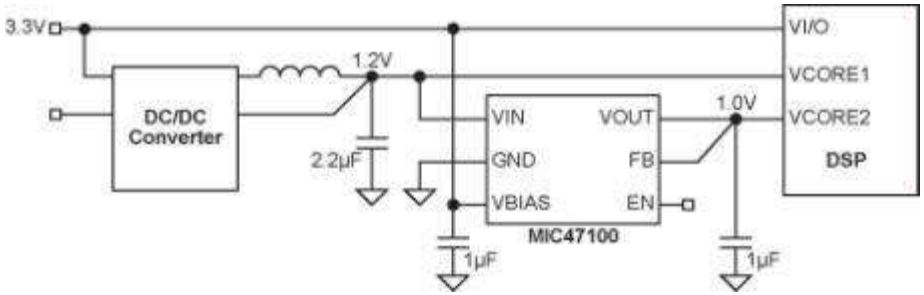

<< BACK

MIC47050

500mA ULDO with Low Input and Low Output Voltage

Online Datasheet

Features:

- Input voltage range: 1.0V to 3.6V
- Stable with 1µF ceramic output capacitor
- ±1.5% initial output voltage accuracy
- Bias supply voltage range: 2.3V to 5.5V
- Adjustable output voltage range: 0.4V to 2.0V
- Logic-level enable input
- 400mA maximum output current per LDO
- Very fast transient response
- UVLO on both supply packages
- Thermally enhanced 2mm x 2mm MLF® and –
  - Thin MLF® packages
- Junction temperature range of -40ºC to +125ºC
- Low dropout voltage ULDO™: 44mV at 500mA

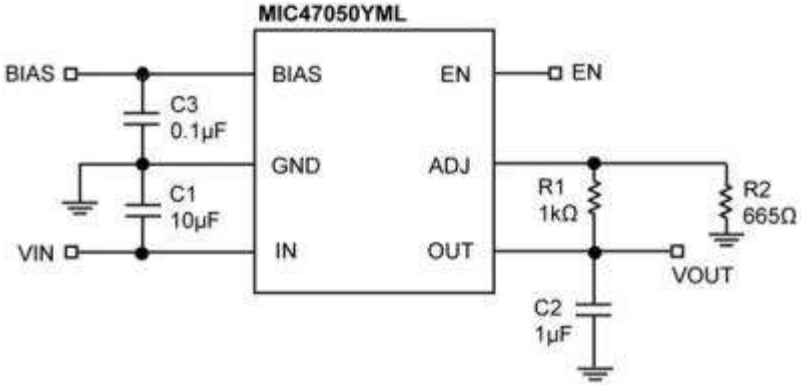

<< BACK

MIC47053

500mA Micropower ULDO™ Linear Regulator

Online Datasheet

Features:

- Input voltage range: 1.0V to 3.6V
- Stable with 1µF ceramic output capacitor
- Low dropout voltage: 49mV at 500mA
- ±2% initial output voltage accuracy over temperature
- Bias supply voltage range: 2.3V to 5.5V
- Adjustable output voltage range down to 0.4V
- Logic-level enable input
- UVLO on both supply voltages
- High bandwidth - very fast transient response
- Low shutdown current: 0.1µA typical
- Thermally enhanced 2mm x 2mm Thin DFN package
- Junction temperature range of -40ºC to +125ºC

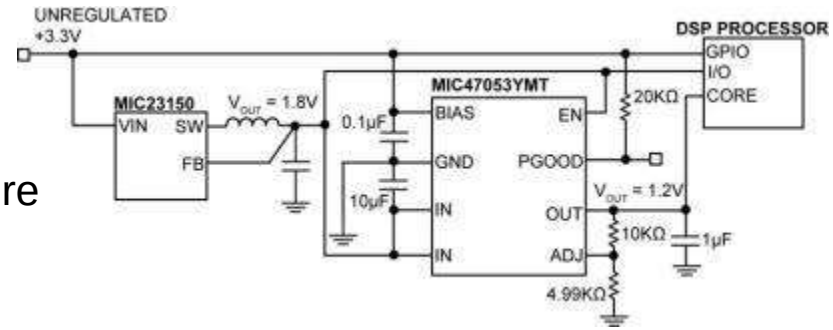

<< BACK

MIC94305

500mA Switch with Ripple Blocker™ Technology

Online Datasheet

Features:

- 1.8V to 3.6V input voltage range
- Active noise rejection over a wide –
  - frequency - band: >60dB from 40kHz –
  - to 5MHz
- Rated to 500mA output current
- Current-limit and thermal-limit protected
- 1.6mm x 1.6mm, 6-pin Thin DFN
- Logic-controlled enable pin
- -40ºC to +125ºC junction temperature range

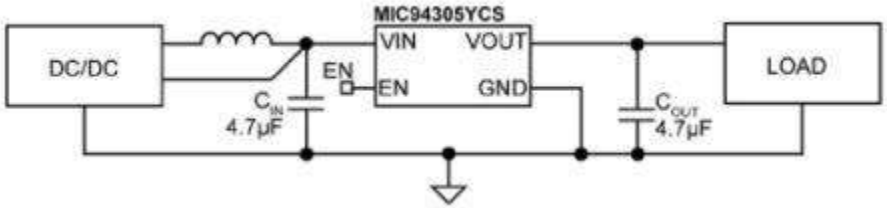

<< BACK

MIC94325/45/55

500mA LDO with Ripple Blocker™ Technology

Online Datasheet

Features:

- 1.8V to 3.6V input voltage range
- Active noise rejection over a wide –
  - frequency band: >50dB from –
  - 10Hz to 5MHz at 500mA load
- Rated to 500mA output current
- Fixed and adjustable output voltages
- Optional output auto-discharge when disabled
- Current-limit and thermal-limit protected
- 1.6mm x 1.6mm, 6-pin Thin DFN
- -40ºC to +125ºC junction temperature range

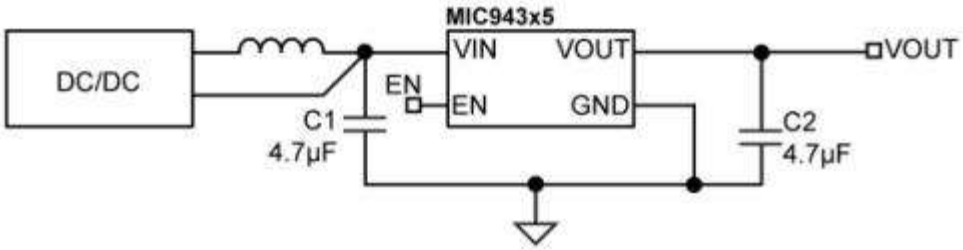

<< BACK

MIC94300

200mA Switch with Ripple Blocker™ Technology

Online Datasheet

Features:

- 1.8V to 3.6V input voltage range
- Active noise rejection over a wide –
  - frequency band: >60dB from 40kHz –
  - to 5MHz
- Rated to 200mA output current
- Current-limit and thermal-limit protected
- 1.2mm x 1.6mm, 4-pin Thin MLF®
- Logic-controlled enable pin
- -40ºC to +125ºC junction temperature range

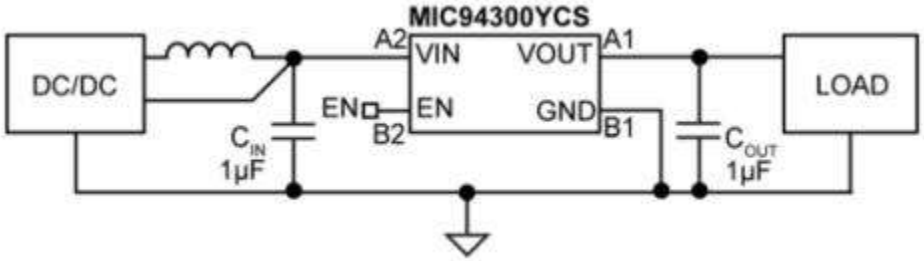

<< BACK

MIC94310

200mA LDO with Ripple Blocker™ Technology

Online Datasheet

Features:

- 1.8V to 3.6V input voltage range
- Active noise rejection over a wide frequency –
  - band: >50dB from 10Hz to 10MHz at –
  - 200mA load
- Rated to 200mA output current
- -40ºC to +125ºC junction temperature range
- Fixed output voltages
- Current-limit and thermal-limit protected
- 1.2mm x 1.6mm, 4-pin Thin DFN
- 5-pin SOT-23
- Logic-controlled enable pin

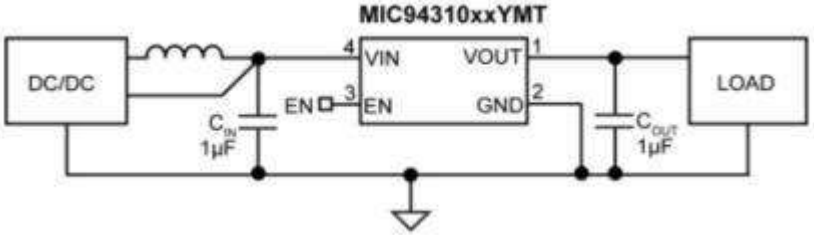

<< BACK

MIC5270

µCap Negative Low-Dropout Regulator

Online Datasheet

Features:

- Stable with ceramic or tantalum capacitor
- Low dropout voltage: 500mV at 100mA
- Tight initial accuracy: ±2%
- Tight load and line regulation
- Low ground current: 35µA at load equals 100µA
- Thermal shutdown
- Current limiting
- IttyBitty® SOT-23-5 packaging

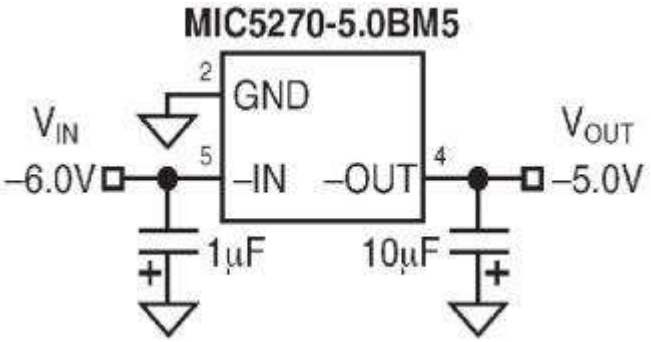

<< BACK

MIC5271

µCap Negative Low-Dropout Regulator

Online Datasheet

Features:

- Stable with ceramic or tantalum capacitor
- Positive and negative enable thresholds
- Low dropout voltage: 500mV at 100mA
- Low ground current:35µA at load equals 100µA
- Tight initial accuracy:±2%
- Tight load and line regulation
- Thermal shutdown
- Current limiting
- SOT-23-5 packaging
- Zero off-mode current

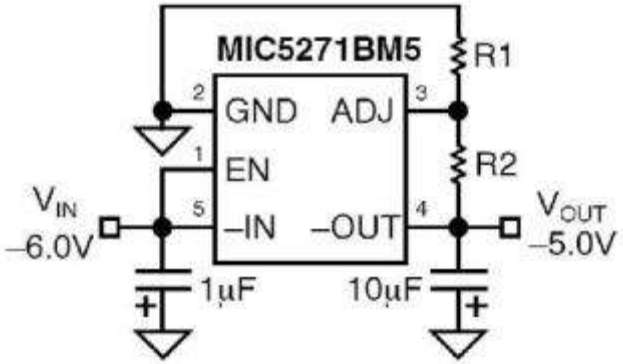

<< BACK

MIC68220

Dual 2A LDO Regulator

Online Datasheet

Features:

- Stable with 4.7µF ceramic output capacitor
- Input voltage range: 1.65V to 5.5V
- ±1.0% initial output tolerance
- 2A maximum output current - peak start up
- 1A Continuous operating current
- Programmable Ramp Control™ with:
  - For in-rush current limiting
  - Slew rate control of the output voltage
- Power-on Reset (POR) supervisor
  - Programmable delay time
- Single Master can control multiple Slave –
  - regulators with tracking output voltages
- Tiny 4mm x 5mm MLF® package
- Maximum dropout (VIN - VOUT) of 500mV –
  - over temperature at 1A output current
- Fixed and adjustable output voltages
- Thermal shutdown and current limit protection

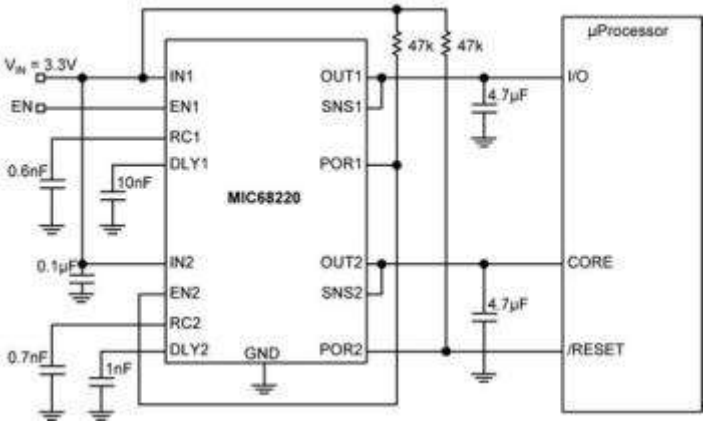

<< BACK

MIC5355

Dual 500mA µCap Low Dropout Micropower LDO

Online Datasheet

Features:

- 2.5V to 5.5V input voltage range
- 2% initial output accuracy
- Wide output voltage range: 1.0V to 3.3V
- Low quiescent current: 38µA per output
- Low shutdown current : <1µA typical
- µCap stable with 2.2µF ceramic capacitor
- Low dropout voltage: 350mV at 500mA
- Excellent load/line transient response
- Independent logic controlled enable pins
- Output discharge circuit (MIC5356)
- Current and thermal limit protection
- Power 8-pin ePad MSOP package

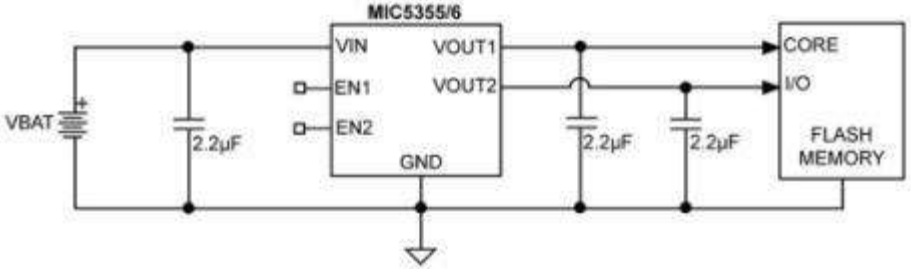

<< BACK

MIC5356

Dual 500mA µCap Low Dropout Micropower LDO

Online Datasheet

Features:

- 2.5V to 5.5V input voltage range
- 2% initial output accuracy
- Wide output voltage range: 1.0V to 3.3V
- Low quiescent current: 38µA per output
- Very low quiescent current in shutdown: -- <1µA typical
- µCap stable with 2.2µF ceramic capacitor
- Low dropout voltage: 350mV at 500mA
- Excellent load/line transient response
- Independent logic controlled enable pins
- Output discharge circuit (MIC5356)
- Current and thermal limit protection
- Power 8-pin ePad MSOP package

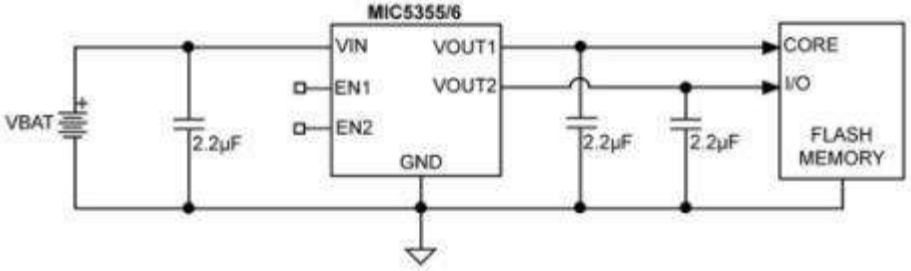

<< BACK

MIC5357

High Performance Low Noise Dual 500mA ULDO

Online Datasheet

Features:

- 2.6V to 5.5V input voltage range
- Ultra-low output noise: 51µVrms
- ±2% initial output accuracy
- Small 8-pin ePad MSOP package
- Excellent Load/Line transient response
- Ultra-low dropout voltage: 130mV @ 500mA
- Fast start up time: 38µs
- µCap stable with 2.2µF ceramic capacitors
- Thermal shutdown protection
- Low quiescent current: 160µA with both outputs –
  - at maximum load

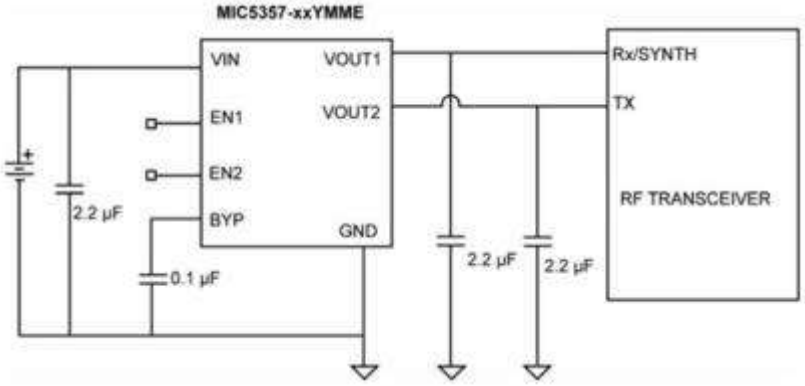

<< BACK

MIC5388/9

Dual 200mA Peak LDO in Wafer Level Chip Scale Package

Online Datasheet

Features:

- 2.5V to 5.5V input voltage range
- Independent enable pins
- High output accuracy: ±2%
- Low quiescent current: 32µA per LDO
- Stable with 1µF ceramic output capacitors
- Two 200mA peak output current LDOs
- Low dropout voltage: 175mV at 150mA
- Output discharge circuit (MIC5389)
- Thermal shutdown protection
- Current limit protection
- 6-bump 1.5mm x 1.0mm WLCSP package

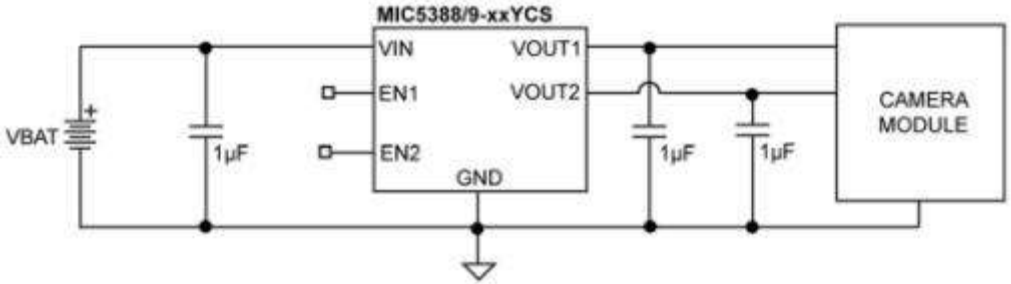

<< BACK

MIC5310

Dual 150mA µCap in 2mm x 2mm MLF®

Online Datasheet

Features:

- Ultra-low dropout voltage ULDO 35mV @ 150mA
- High PSRR: >70dB @ 1KHz
- Ultra-low output noise: 30µVrms
- ±2% initial output accuracy
- 2.3V to 5.5V input voltage range
- Tiny 8-pin 2mm x 2mm MLF® leadless package
- Excellent load/line transient response
- Fast start-up time: 30µs
- µCap stable with 1µF ceramic capacitor
- Thermal shutdown protection
- Low quiescent current: 75µA per output
- Current limit protection

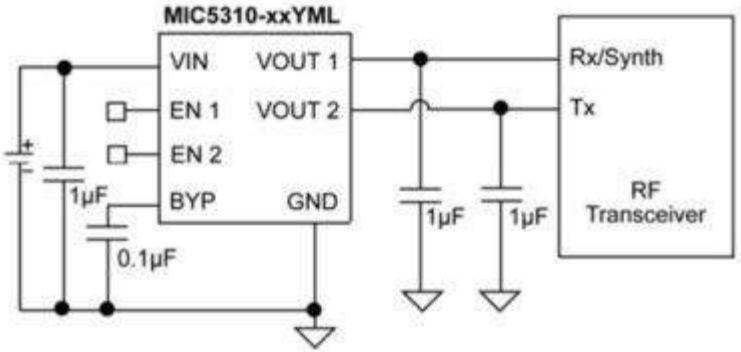

<< BACK

MIC5320

Dual High Performance 150mA µCap ULDO

Online Datasheet

Features:

- 2.3V to 5.5V input voltage range
- Ultra-low dropout voltage ULDO: 35mV @ 150mA
- Independent enable pins
- Tiny 6-pin 1.6mm x 1.6mm Thin MLF® leadless package
- Low cost TSOT-23-6 package
- PSRR: >65dB on each LDO
- 150mA output current per LDO
- µCap stable with 1µF ceramic capacitor
- Low quiescent current: 85µA per output
- Fast turn-on time: 30µs
- Thermal shutdown protection
- Current limit protection

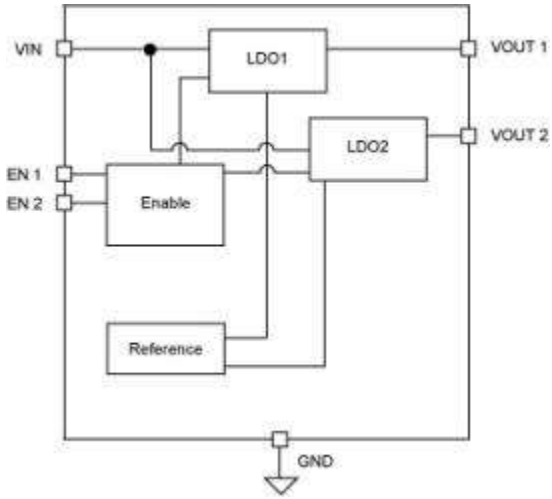

<< BACK

MIC5321

Dual High Performance 150mA µCap ULDO

Online Datasheet

Features:

- 2.3V to 5.5V input voltage range
- Ultra-low dropout voltage ULDO: 35mV @ 150mA
- Tiny 6-pin 1.6mm x 1.6mm MLF® leadless package
- Low cost TSOT-23-6 package
- Bypass pin for improved noise performance
- High PSRR: >75dB on each LDO
- Ultra low noise output: > 30µVrms
- Dual 150mA outputs
- µCap stable with 1µF ceramic capacitor
- Low quiescent current: 150µA per output
- Fast turn-on time: 45µs
- Thermal shutdown protection
- Current limit protection

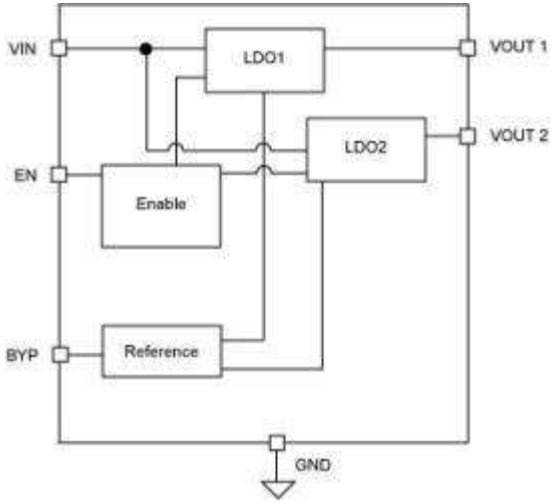

<< BACK

MIC5322

Dual, High Performance 150mA µCap ULDO

Online Datasheet

Features:

- 2.3V to 5.5V input voltage range
- Dual 150mA outputs
- µCap stable with 1µF ceramic capacitor
- Low quiescent current: 150µA
- Fast turn-on time: 45µs
- Ultra-low dropout voltage ULDO: 35mV – - @ 150mA
- Tiny 6-pin 1.6mm x 1.6mm Thin MLF® - - leadless package
- Bypass pin for improved noise performance
- High PSRR: >75dB on each LDO
- Ultra-low noise output: > 30µVrms
- Thermal shutdown protection
- Current limit protection

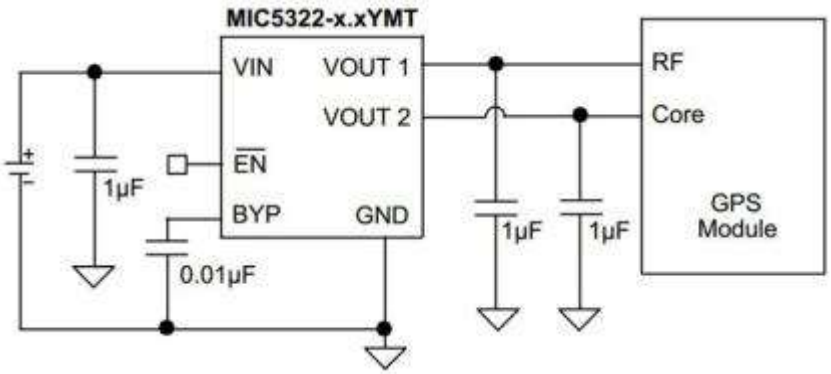

<< BACK

MIC5370/1

High-Performance Dual 150mA LDO 1.6mm x 1.6mm Thin MLF®

Online Datasheet

Features:

- 2.5V to 5.5V input voltage range
- Two 150mA output current LDOs
- High output accuracy:
  - ±2% initial accuracy
- Low quiescent current 32µA per LDO
- Stable with 1µF ceramic output capacitors
- Independent enable pins
- Low dropout voltage: 155mV at 150mA
- Thermal shutdown protection
- Current limit protection
- Output discharge circuit (MIC5371)
- 6-pin 1.6mm x 1.6mm Thin MLF® package

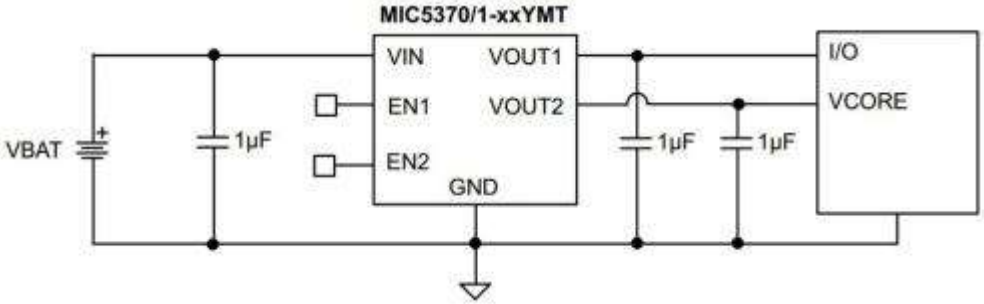

<< BACK

MIC5380/1

High Performance Dual 150mA LDO 1mm x 1mm Thin MLF®

Online Datasheet

Features:

- 6-pin 1mm x 1mm Thin MLF® package
- 2.5V to 5.5V input voltage range
- 150mA output current per LDO
- High output accuracy ±1% typical
- Low quiescent current 32µA per LDO
- Stable with 0402 1µF ceramic output –
  - capacitors
- Low dropout voltage: 155mV at 150mA
- Output discharge circuit (MIC5381)
- Independent enable pins
- Thermal shutdown protection
- Current limit protection

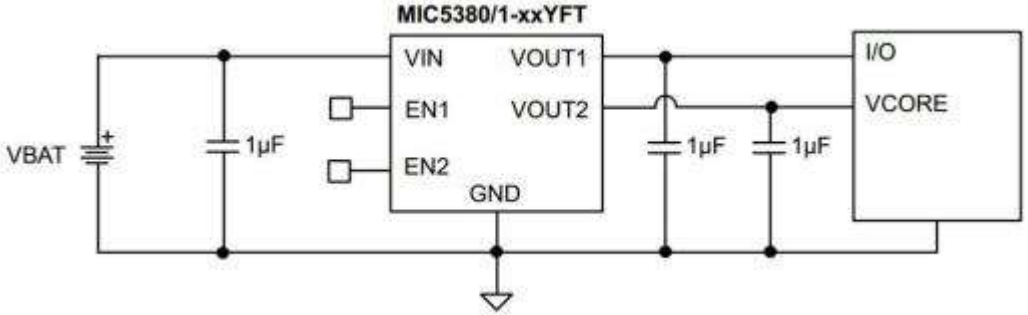

<< BACK

MIC5264

150mA µCap Dual LDO Regulator

Online Datasheet

Features:

- 2.7V to 5.5V supply voltage
- Low 90µA quiescent current per LDO
- Tiny 2.5mm x 2.5mm MLF® package
- Low noise: 57µVrms
- High PSRR: 70dB at 1kHz
- Low dropout voltage: 210mV at 150mA
- Stable with ceramic output capacitors
- Independent enable pins
- Fast transient response
- Active shutdown on both outputs

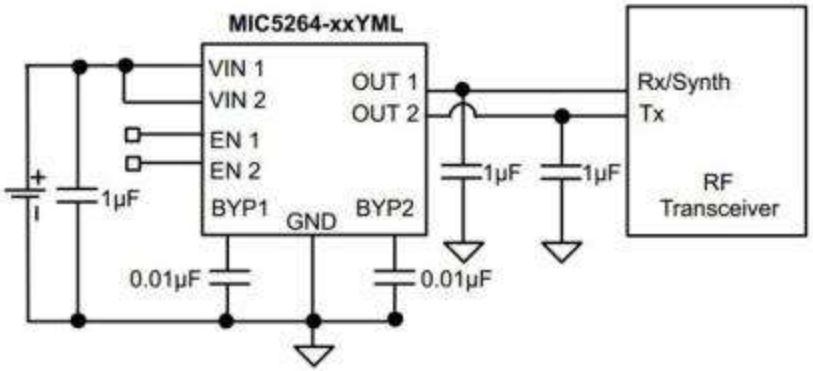

<< BACK

MIC5392/3

High-Performance Dual 150mA LDO

Online Datasheet

Features:

- 2.5V to 5.5V input voltage range
- Two 150mA output current LDOs
- Independent enable pins
- High output accuracy: ±2% initial –
  - accuracy
- Low quiescent current (32µA per LDO)
- Stable with 1µF ceramic output capacitors
- Low dropout voltage (155mV at 150mA)
- Thermal-shutdown protection
- Current-limit protection
- Internal 25Ω output discharge circuit (MIC5393)
- Tiny 6-pin 1.2mm x 1.2mm Thin DFN package

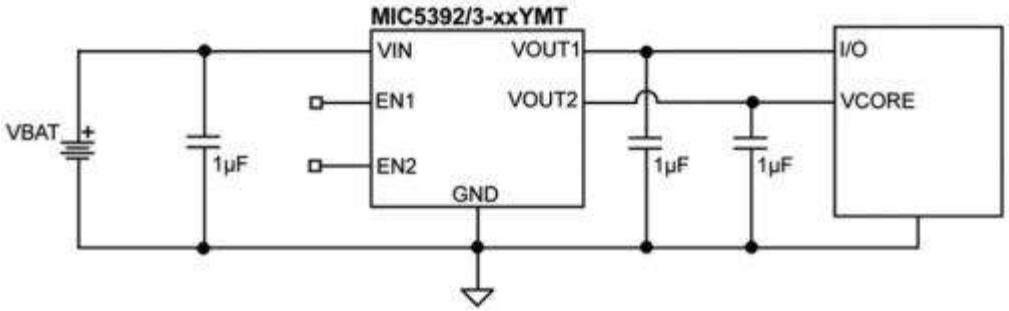

<< BACK

MIC5311

LowQ® Dual µCap LDO in 3mm x 3mm MLF®

Online Datasheet

Features:

- Input voltage range: 2.25V to 5.5V
- LowQ® Mode:
  - 7µA total quiescent current
  - 10mA output current capable LowQ® mode
  - Logic level control with external pin
- Stable with ceramic output capacitor
- 2 LDO outputs: 300mA each
- Tiny 10-pin 3mm x 3mm MLF® package
- Low dropout voltage of 60mV @ 150mA
- Ultra-low quiescent current of 28µA total in full current mode
- High output accuracy:
  - ±1.0% initial accuracy
  - ±2.0% over temperature
- Thermal shutdown protection
- Current limit protection

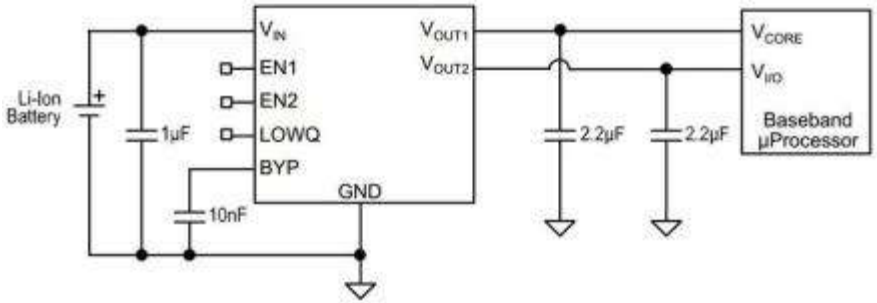

<< BACK

MIC5312

LowQ® Dual µCap LDO w/Integrated POR in 3mm x 3mm MLF®

Online Datasheet

Features:

- Input voltage range: 2.25V to 5.5V
- LowQ® Mode:
  - 7µA total quiescent current
  - 10mA output current capable LowQ® mode
  - Logic level control with external pin
- Stable with ceramic output capacitor
- 2 LDO outputs: 300mA each
- Integrated power-on reset (POR) with –
  - adjustable delay time
- Tiny 3mm x 3mm MLF®-10 package
- Low dropout voltage of 60mV @ 150mA
- Ultra-low quiescent current of 28µA total in full current mode
- High output accuracy:
  - ±1.0% initial accuracy
  - ±2.0% over temperature
- Thermal shutdown protection

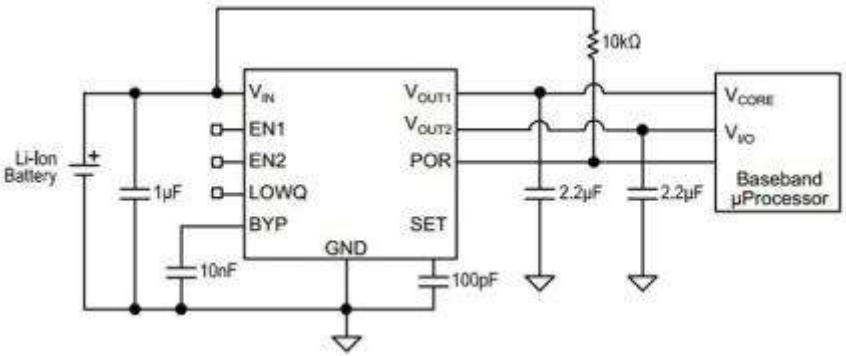

<< BACK

MIC5315

Low Voltage Dual 300mA LDO with Voltage Select

Online Datasheet

Features:

- 300mA output current for each LDO
- Voltage select function
- Dual low voltage regulator inputs: 1.7V to 5.5V
- Low output voltage range: 0.8V to 2.0V
- Ultra-low dropout voltage of 85mV @ 300mA
- Stable with 1 µF ceramic output capacitors
- Very fast transient response
- Thermal shutdown and current limit protection
- Tiny 10-pin 2mm x 2mm Thin MLF® package

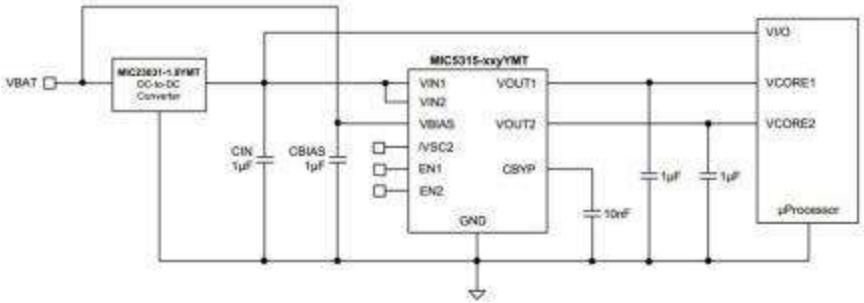

<< BACK

MIC5316

Low Voltage Dual 300mA LDO with Power on Reset and Voltage Select

Online Datasheet

Features:

- 300mA output current for each LDO
- Voltage select function
- Low output voltage range: 0.8V to 2.0V
- Very fast transient response
- Dual low voltage regulator inputs: 1.7V to 5.5V
- Ultra-low dropout voltage of 85mV @ 300mA
- Power on Reset output with adjustable delay
- Stable with 1µF ceramic output capacitors
- Thermal shutdown and current limit protection
- Tiny 12-pin 2.5mm x 2.5mm Thin MLF® package

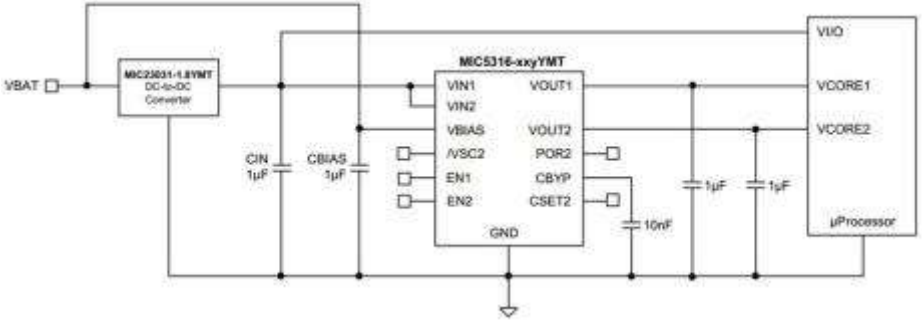

<< BACK

MIC5330

Dual 300mA µCap in 2mm x 2mm MLF®

Online Datasheet

Features:

- 2.3V to 5.5V input voltage range
- High PSRR: >70dB @ 1KHz
- Ultra-low output noise: 30µVrms
- ±2% initial output accuracy
- Fast start-up time: 30µs
- Tiny 8-pin 2mm x 2mm MLF® leadless package
- Excellent Load/Line transient response
- Ultra-low dropout voltage ULDO 75mV @ 300mA
- 300mA output current per LDO
- Thermal shutdown protection
- Low quiescent current: 75µA per output
- Current limit protection

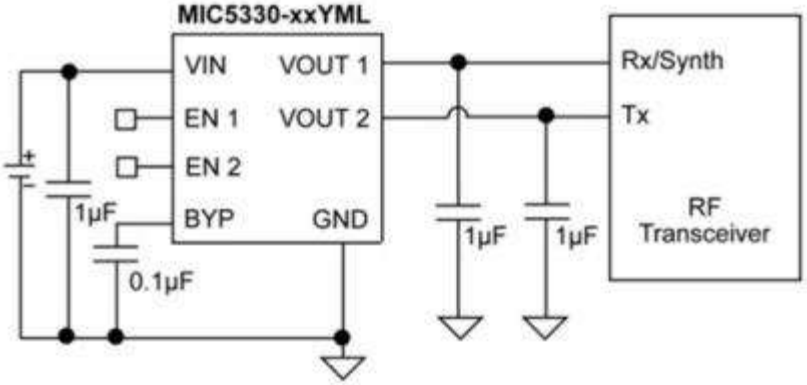

<< BACK

MIC5331

Micro-Power High Performance Dual 300mA ULDO

Online Datasheet

Features:

- 2.3V to 5.5V input voltage range
- 300mA output current per LDO
- Very low quiescent current: 25 µA per LDO
- High PSRR: >65dB on each LDO
- Stable with 1 µF ceramic output capacitors
- Tiny 8-pin 2mm x 2mm Thin MLF® package
- Ultra-low dropout voltage: 120mV @ 300mA
- Low output voltage noise: 50 μV_{rms}
- Thermal shutdown protection
- Current limit protection

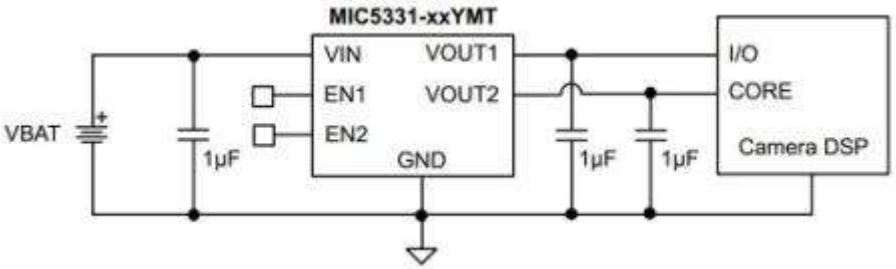

<< BACK

MIC5332

Micro-Power High Performance Dual 300mA ULDO

Online Datasheet

Features:

- POR output with programmable delay on LDO2
- 300mA output current per LDO
- Very low quiescent current: 25 µA per LDO
- High PSRR: >65dB on each LDO
- 2.3V to 5.5V input voltage range
- Stable with 1µF ceramic output capacitors
- Tiny 8-pin 2mm x 2mm Thin MLF® package
- Ultra-low dropout voltage: 120mV @ 300mA
- Low output voltage noise: 50 μV_{rms}
- Thermal shutdown protection
- Current limit protection

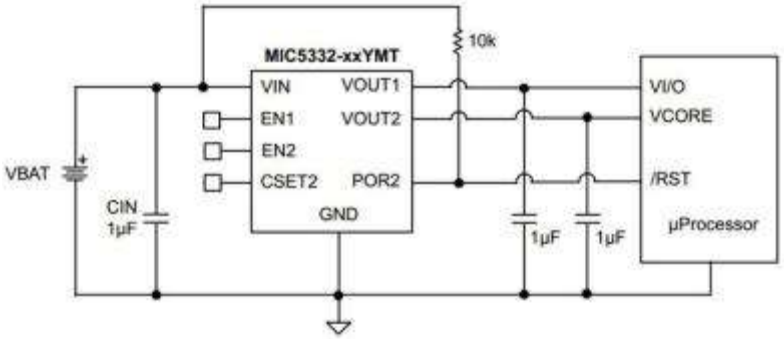

<< BACK

MIC5333

Micro-Power High Performance Dual 300mA ULDO with Dual POR

Online Datasheet

Features:

- 2.3V to 5.5V input voltage range
- 300mA output current per LDO
- Very low quiescent current: 25µA per LDO
- Stable with 1µF ceramic output capacitors
- POR output with programmable delay for each LDO
- High PSRR: >65dB on each LDO
- Tiny 10-pin 2.5mm x 2.5mm Thin MLF® package
- Ultra-low dropout voltage: 120mV @ 300mA
- Low output voltage noise: 50 μV_{rms}
- Thermal shutdown protection
- Current limit protection

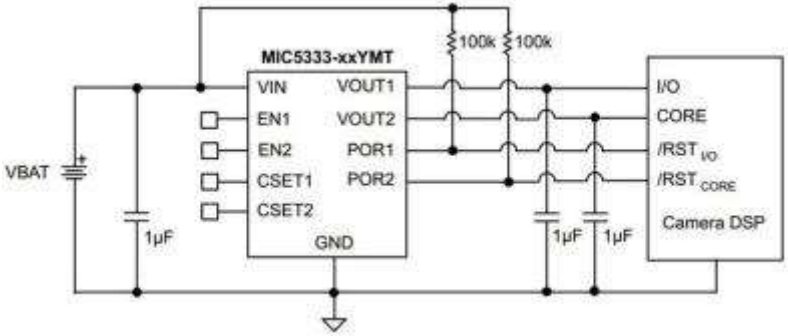

<< BACK

MIC5335

Dual High Performance 300mA µCap ULDO

Online Datasheet

Features:

- 2.3V to 5.5V input voltage range
- Ultra-low dropout voltage: 75mV at 300mA
- Independent enable pins
- Ultra Thin 1.6mm x 1.6mm 6-pin MLF® package
- High PSRR: >65dB
- 300mA output current per LDO
- µCap Stable with 1µF ceramic capacitor
- Low quiescent current: 90µA/LDO
- Fast turn-on time: 30µs
- Low output voltage noise: 24µV_{rms}
- Thermal shutdown protection
- Current limit protection

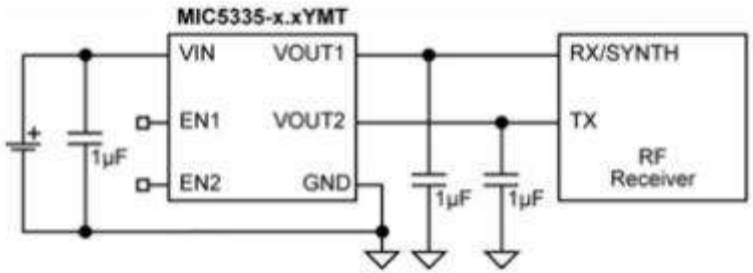

<< BACK

MIC5338/9

Dual 300mA µCap LDO in 1.6mm x 1.6mm Thin MLF®

Online Datasheet

Features:

- 2.5V to 5.5V input voltage range
- Two 300mA outputs
- High output accuracy: 2%
- Low quiescent current: 70µA total
- Stable with ceramic output capacitors
- Independent enable pins
- Low dropout voltage: 220mV at 300mA
- Low output noise
- Thermal shutdown protection
- Current limit protection
- Output discharge circuit (MIC5339)
- 6-pin 1.6mm x 1.6mm Thin MLF® package

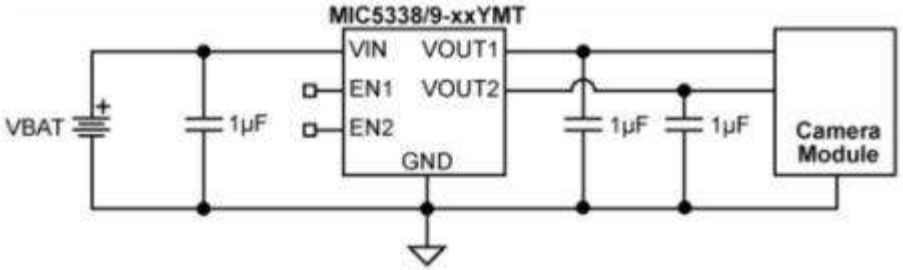

<< BACK

MIC5396/7/8/9

Low-Power Dual 300mA LDO in 1.2mm x 1.6mm Extra Thin DFN

Online Datasheet

Features:

- 2.5V to 5.5V input voltage range
- Independent power inputs
- Output voltage range from 1V to 3.3V
- Two 300mA outputs
- High output accuracy (±2%)
- Low quiescent current: 37µA typical/LDO
- Stable with 1µF ceramic output capacitors
- Low dropout voltage (160mV at 300mA)
- Internal enable pull-down (MIC5398, MIC5399)
- Output discharge circuit (MIC5397, MIC5399)
- Thermal-shutdown protection
- Current-limit protection
- 8-pin 1.2mm x 1.6mm Extra Thin DFN package

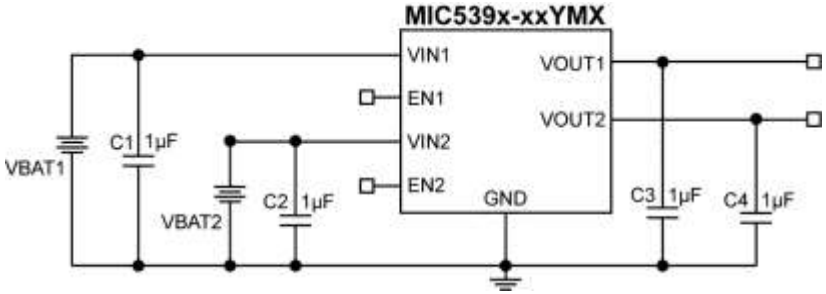

<< BACK

MIC5396/7/8/9

Low-Power Dual 300mA LDO in 1.2mm x 1.6mm Extra Thin DFN

Online Datasheet

Features:

- 2.5V to 5.5V input voltage range
- Independent power inputs
- Output voltage range from 1V to 3.3V
- Two 300mA outputs
- High output accuracy (±2%)
- Low quiescent current: 37µA typical/LDO
- Stable with 1µF ceramic output capacitors
- Low dropout voltage (160mV at 300mA)
- Internal enable pull-down (MIC5398, MIC5399)
- Output discharge circuit (MIC5397, MIC5399)
- Thermal-shutdown protection
- Current-limit protection
- 8-pin 1.2mm x 1.6mm Extra Thin DFN package

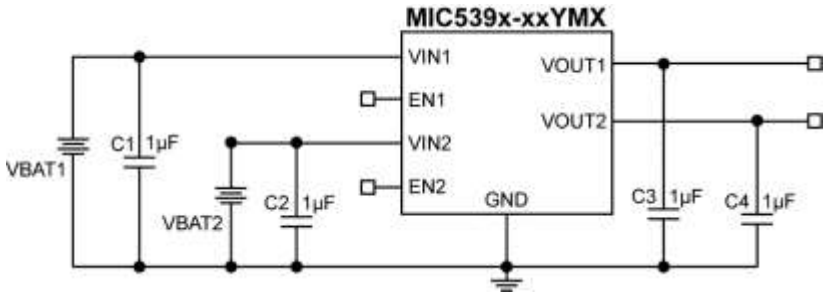

<< BACK

MIC5212

Dual 500mA LDO

Online Datasheet

Features:

- Fused lead frame SOIC-8
- Up to 500mA per regulator output
- Low quiescent current
- Low dropout voltage
- Tight load and line regulation
- Low temperature coefficient
- Current and thermal limiting
- Reversed input polarity protection

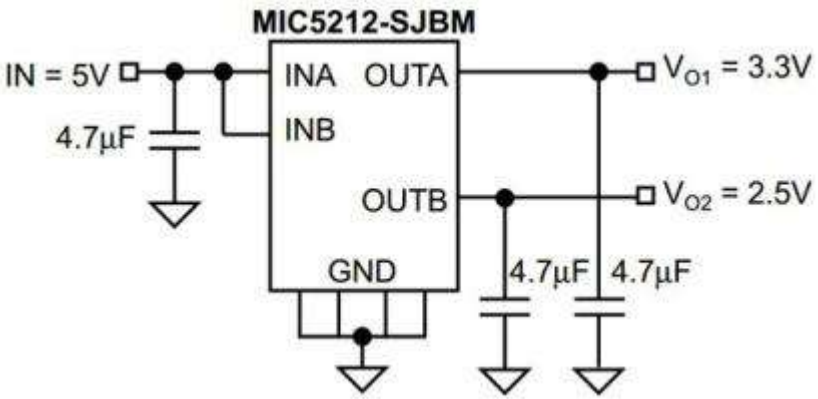

<< BACK

MIC5210

Dual 150mA LDO

Online Datasheet

Features:

- Micrel Mini 8®; MSOP package
- Up to 150mA per regulator output
- Low quiescent current
- Low dropout voltage
- Wide selection of output voltages
- Tight load and line regulation
- Low temperature coefficient
- Current and thermal limiting
- Reversed input polarity protection
- Zero off-mode current
- Logic-controlled electronic enable

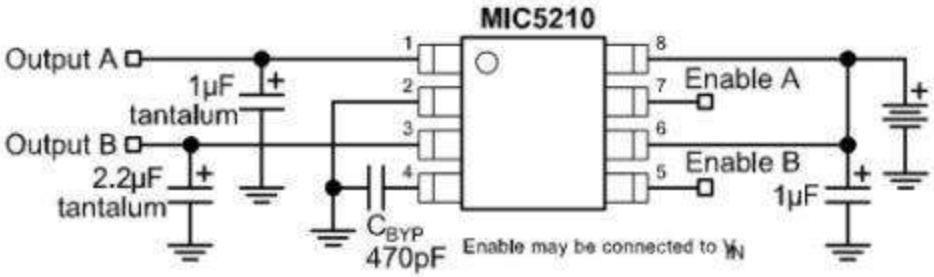

<< BACK

MIC5211

Dual µCap 80mA LDO

Online Datasheet

Features:

- Stable with low-value ceramic or tantalum capacitors
- Independent logic controls
- Low quiescent current
- Low dropout voltage
- Mixed voltages available
- Tight load and line regulation
- Low temperature coefficient
- Current and thermal limiting
- Reversed input polarity protection
- Zero off-mode current
- Dual regulator in tiny SOT-23 package
- 2.5V to 16V input range

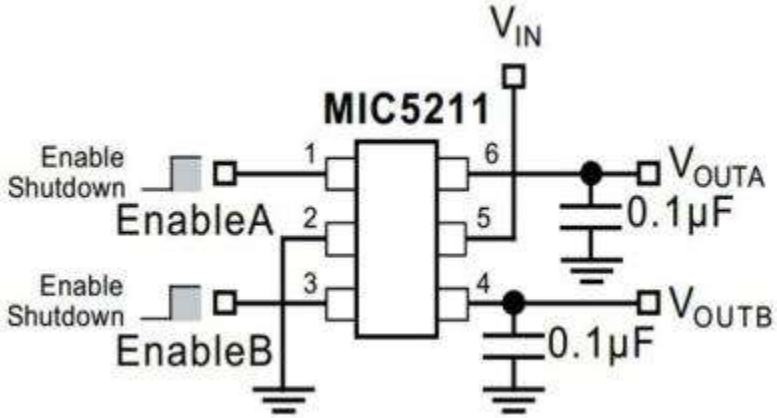

<< BACK

MIC5208

Dual 50mA LDO

Online Datasheet

Features:

- Micrel Mini 8® MSOP package
- Guaranteed 50mA output
- Low quiescent current
- Low dropout voltage
- Wide selection of output voltages
- Tight load and line regulation
- Low temperature coefficient
- Current and thermal limiting
- Reversed input polarity protection
- Zero off-mode current
- Logic-controlled electronic enable

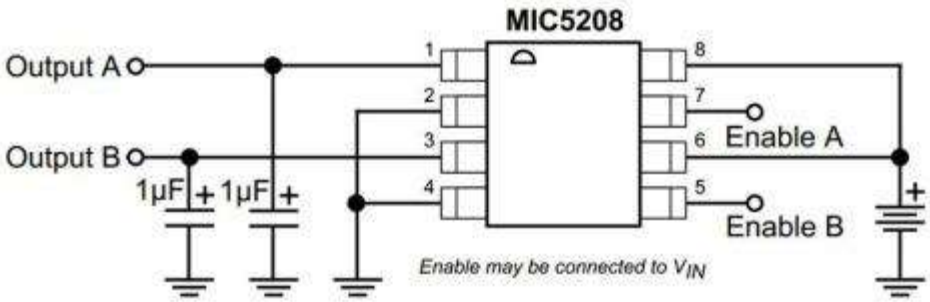

<< BACK

MIC5202

Dual 100mA LDO

Online Datasheet

Features:

- High output voltage accuracy
- Variety of output voltages
- Up to 100mA of continuous output current
- Low ground current
- Low dropout voltage
- Excellent line and load regulations
- Extremely low temperature coefficient
- Current and thermal limit protections
- Reverse-battery protection
- Zero off-mode current
- Logic-controlled electronic shutdown
- 8-pin SOIC package

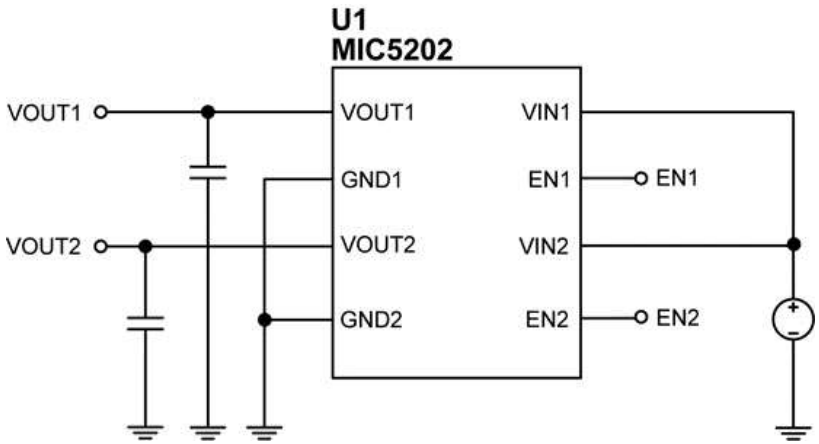

<< BACK

MIC2210

Dual µCap LDO with Open-Drain Driver

Online Datasheet

Features:

- Input voltage range: 2.25V to 5.5V
- Stable with ceramic output capacitor
- 2 LDO outputs
- Output 1: 150mA output current
- Output 2: 300mA output current
- 1 Open-drain driver
- Low dropout voltage of 80mV @ 100mA
- Ultra-low quiescent current of 48µA
- High output accuracy:
  - ±1.0% initial accuracy
  - ±2.0% over temperature
- Thermal shutdown protection
- Current limit protection
- Tiny 10-pin 3mm x 3mm MLF® package

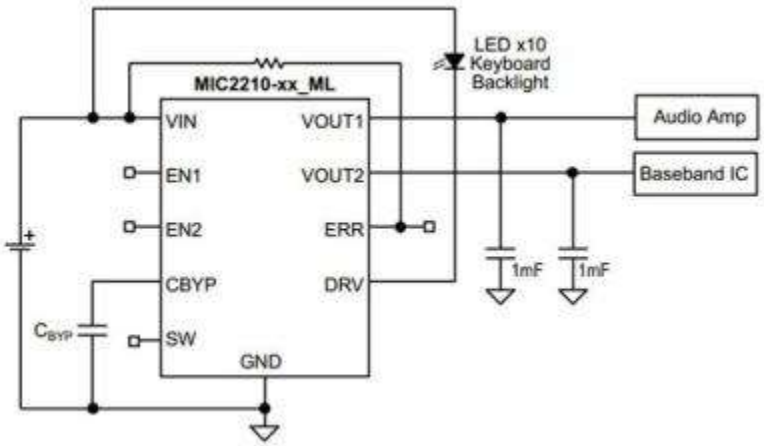

<< BACK

MIC2211

Dual µCap LDO in 3mm x 3mm MLF®

Online Datasheet

Features:

- Input voltage range: 2.25V to 5.5V
- Stable with ceramic output capacitor
- 2 LDO outputs:
  - Output 1: 150mA output current
  - Output 2: 300mA output current
- Low dropout voltage of 80mV @ 100mA
- Ultra-low quiescent current of 48µA total (24µA/LDO)
- High output accuracy:
  - ±1.0% initial accuracy
  - ±2.0% over temperature
- Thermal shutdown protection
- Current limit protection
- Tiny 10-pin 3mm x 3mm MLF® package

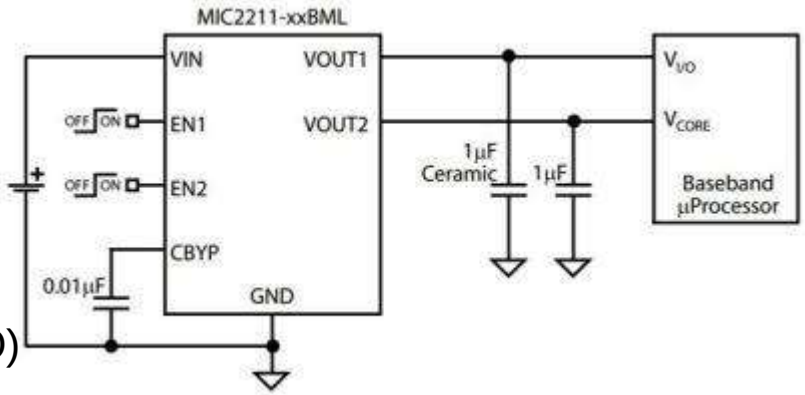

<< BACK

MIC2212

Dual µCap LDO and Power-On Reset

Online Datasheet

Features:

- Input voltage range: 2.25V to 5.5V
- Stable with ceramic output capacitor
- 2 LDO outputs:
  - Output 1: 150mA output current
  - Output 2: 300mA output current
- Power-on reset function with adjustable delay time
- Low dropout voltage of 80mV @ 100mA
- Ultra-low quiescent current of 48µA
- High output accuracy:
  - ±1.0% initial accuracy
  - ±2.0% over temperature
- Thermal shutdown protection
- Current limit protection
- Tiny 10-pin 3mm x 3mm MLF® package

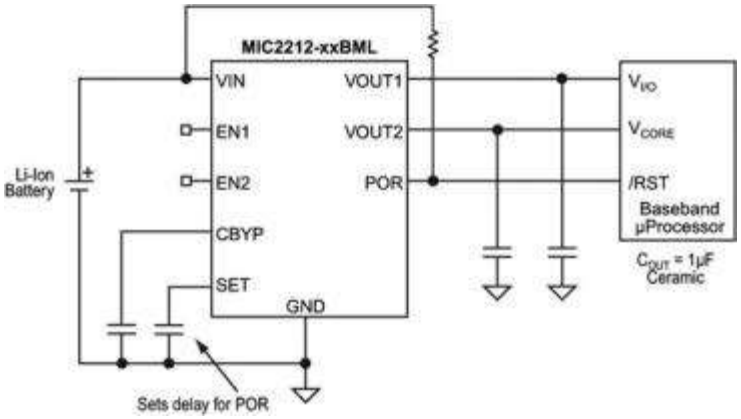

<< BACK

MIC2213

Sequenced Portable Power Management IC

Online Datasheet

Features:

- 2 LDO outputs:
  - Output 1: 150mA output current
  - Output 2: 300mA output current
- 1 Open-drain driver
- Sequencing between outputs 1 and 2
- Input voltage range: 2.25V to 5.5V
- Stable with ceramic output capacitor
- Power-on reset function with adjustable delay time
- Low dropout voltage of 80mV @ 100mA
- Ultra-low quiescent current of 48µA
- High output accuracy:
  - ±1.0% initial accuracy
  - ±2.0% over temperature
- Thermal shutdown protection
- Tiny 3mm x 3mm MLF®-10 package

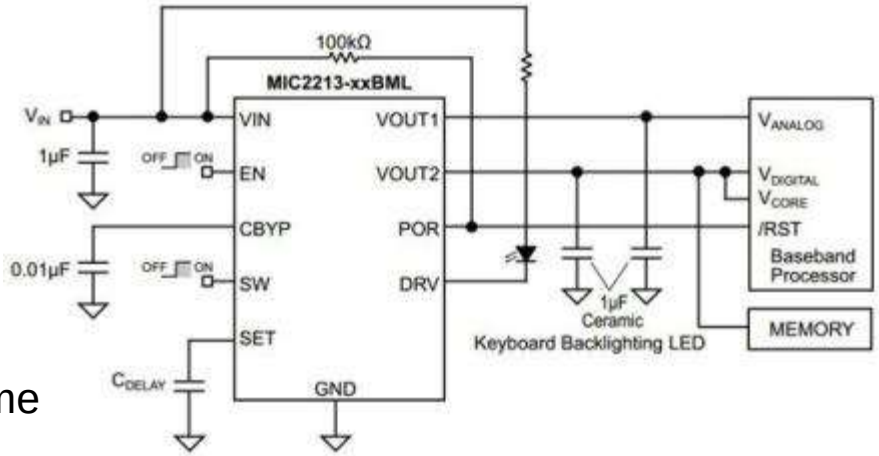

<< BACK

MIC2214

Portable Power Management IC

Online Datasheet

Features:

- Input voltage range: 2.25V to 5.5V
- Stable with ceramic output capacitor
- 2 LDO outputs:
  - Output 1: 150mA output current
  - Output 2: 300mA output current
- 1 Open-drain driver
- Power-on reset function with adjustable delay time
- Low dropout voltage of 80mV @ 100mA
- Ultra-low quiescent current of 48µA
- High output accuracy:
  - ±1.0% initial accuracy
  - ±2.0% over temperature
- Thermal shutdown protection
- Current limit protection
- Tiny 3mm x 3mm MLF®-10 package

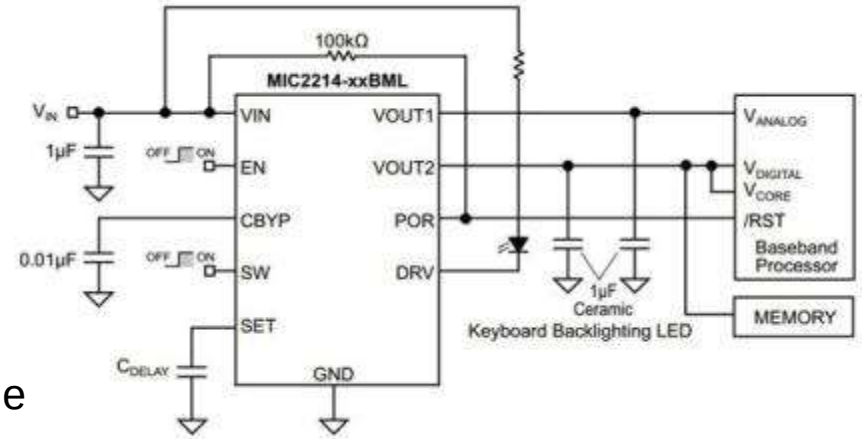

<< BACK

MIC2219

Dynamically Adjustable Dual µCap LDO

Online Datasheet

Features:

- Input voltage range: 2.25V to 5.5V
- Stable with ceramic output capacitor
- 2 LDO outputs:
  - Output 1: 150mA output current
  - Output 2: 300mA output current
- Feedback pins externally accessible
- Low dropout voltage of 80mV @ 100mA
- Ultra-low quiescent current of 48µA total (24µA/LDO)
- High output accuracy:
  - ±1.0% initial accuracy
  - ±2.0% over temperature
- Thermal shutdown protection
- Current limit protection
- Tiny 10-pin 3mm x 3mm MLF® package

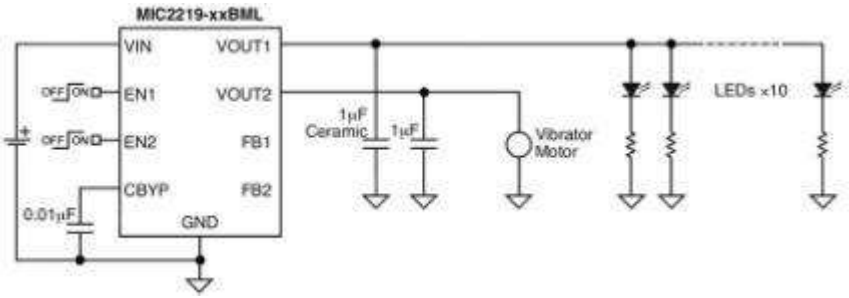

<< BACK

MIC5350

Dual 300mA/500mA LDO in 2x2mm Thin MLF®

Online Datasheet

Features:

- 2.6V to 5.5V input voltage range
- Ultra-low output noise: 30µVrms
- ±2% initial output accuracy
- Excellent Load/Line transient response
- Fast start-up time: 30µs
- Ultra-low dropout voltage: 75mV @ 300mA –
  - and 125mV @ 500mA
- µCap stable with 2.2µF ceramic capacitors
- Thermal shutdown protection
- Low quiescent current: 130µA with both outputs –
  - at maximum load
- Current limit protection
- 8-pin 2mm x 2mm Thin MLF® package

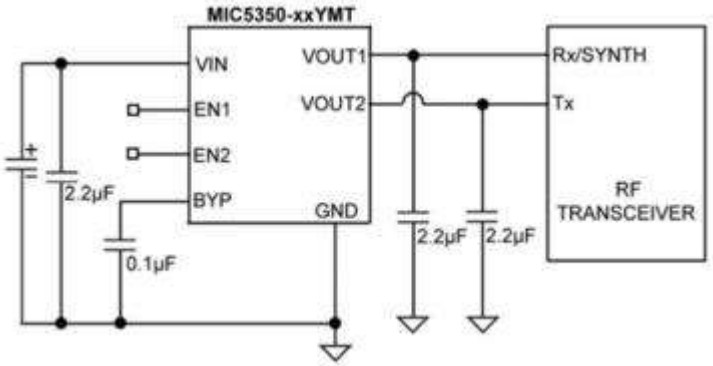

<< BACK

MIC5374

Triple 200mA µCap LDO & 1mA RTC LDO in 2.5x2.5mm Thin QFN

Online Datasheet

Features:

- 1.7V to 5.5V input supply voltage range
- Output current: 200mA LDO1/2/3, 1mA LDO4
- LDO4: Ultra low 8 µA I BIAS for RTC support
- High output accuracy (±2%)
- Independent enable pins
- Thermal shutdown and current limit protection
- POR with user-defined voltage monitoring
- POR voltage input
- Adjustable delay time
- Manual reset pin
- Low dropout voltage: 170mV at 150mA
- High PSRR: 55dB at 1kHz on each LDO
- Stable with tiny ceramic output capacitors
- 2.5mm x 2.5mm Thin QFN 16-pin package

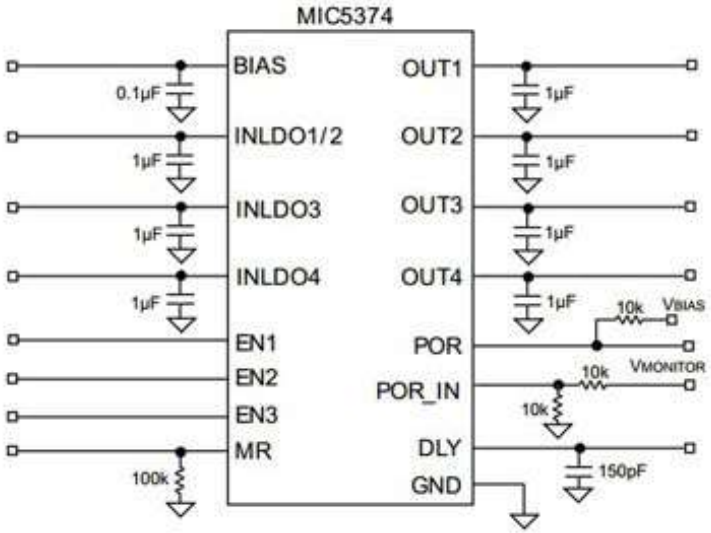

Typical MIC5374-xxxxYMT Circuit

<< BACK

MIC5384

Triple 200mA µCap LDO & 1mA RTC LDO in 2.5x 2.5mm Thin QFN

Online Datasheet

Features:

- 1.7V to 5.5V input supply voltage range
- Output current: 200mA LDO1/2/3, 1mA LDO4
- LDO4: Ultra low 8 µA I BIAS for RTC support
- High output accuracy (±2%)
- Independent enable pins
- 2.5mm x 2.5mm Thin QFN 16-pin package
- Thermal shutdown and current limit protection
- POR with user-defined voltage monitoring
- POR voltage input
- Adjustable delay time
- Manual reset pin
- Low dropout voltage: 170mV at 150mA
- High PSRR: 55dB at 1kHz on each LDO
- Stable with tiny ceramic output capacitors

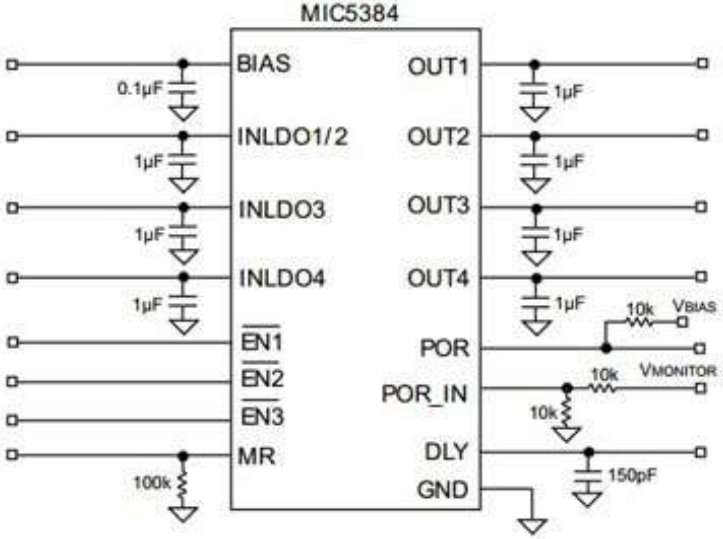

Typical MIC5384-xxxxYMT Circuit

<< BACK

MIC2215

Triple High PSRR Low Noise µCap LDO

Online Datasheet

Features:

- Input voltage range:+2.25V to +5.5V
- 70dB PSRR
- Stable with ceramic output capacitor
- High output accuracy:
- ±1.0% initial accuracy
- ±2.0% over temperature
- Low dropout voltage of 100mV @ 150mA
- Low quiescent current:110µA per regulator
- Fast turn-on time: 30µs
- Zero off-mode current
- Thermal shutdown protection
- Current-limit protection
- 16-pin (4mm x 4mm) MLF® package

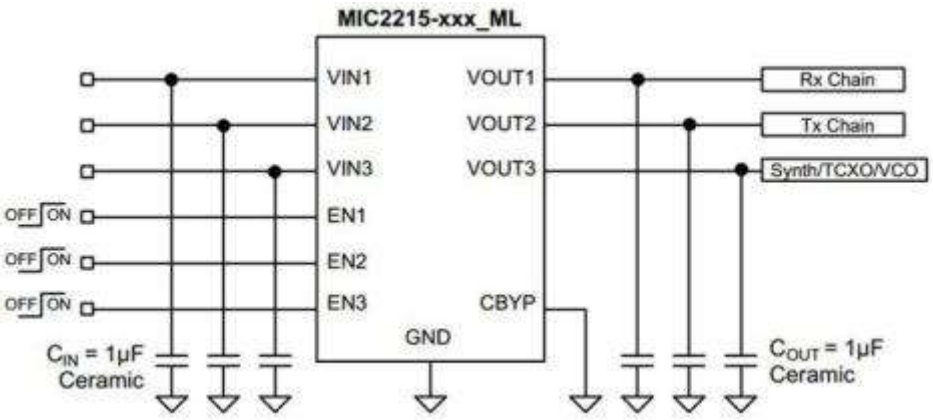

<< BACK

MIC5373/83

Triple 200mA µCap LDO in 2.5 x 2.5 Thin MLF®

Online Datasheet

Features:

- 1.7V to 5.5V input supply voltage range
- Output current: 200mA LDO1/2/3
- High output accuracy (±2%)
- Independent enable pins
- POR with user-defined voltage monitoring:
  - POR voltage input
  - Adjustable delay time
  - Manual reset pin
- Low dropout voltage: 170mV at 150mA
- High PSRR: 55dB at 1kHz on each LDO
- Stable with tiny ceramic output capacitors
- Thermal shutdown and current limit protection
- 2.5mm x 2.5mm Thin MLF® 16-pin package

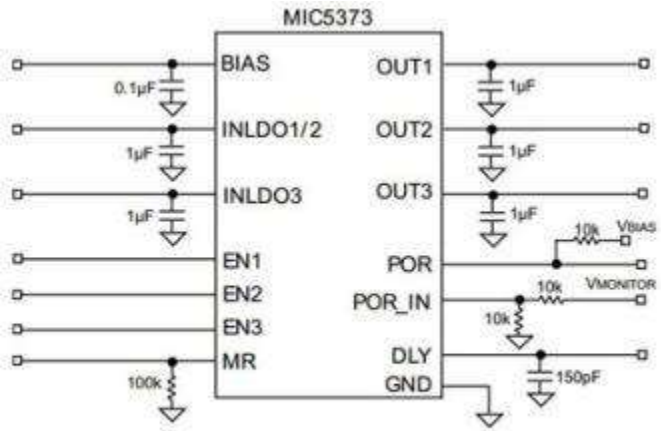

Typical MIC5373-xxxYMT Circuit

<< BACK

MIC5385

Ultra Small Triple 150mA Output LDO

Online Datasheet

Features:

- Input voltage range: 2.5V to 5.5V
- 150mA guaranteed output current for each output
- Stable with ceramic output capacitors
- Low dropout voltage: 180mV @ 150mA
- Excellent Load/Line Transient Response
- Low quiescent current: 32µA per LDO
- High PSRR: 70dB
- High output accuracy:
  - ±2% initial accuracy
- Thermal shutdown and current limit protection
- 2mm x 2mm Thin MLF

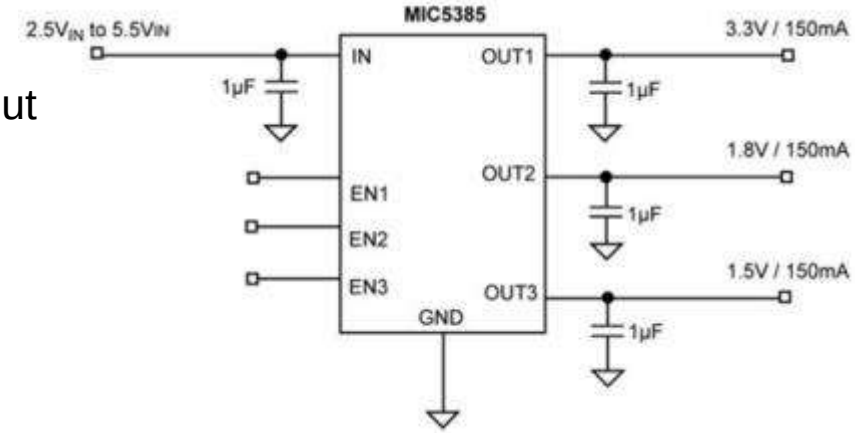

<< BACK

MIC5387

Ultra Small Triple 150mA Output LDO

Online Datasheet

Features:

- Input voltage range: 2.5V to 5.5V
- 150mA guaranteed output current for each output
- Stable with ceramic output capacitors
- Low dropout voltage: 180mV @ 150mA
- Excellent Load/Line Transient Response
- Low quiescent current: 32µA per LDO
- High PSRR: 70dB
- High output accuracy:
  - ±2% initial accuracy
- Thermal-shutdown and current-limit protection
- Tiny 6-pin 1.6mm x 1.6mm Thin MLF

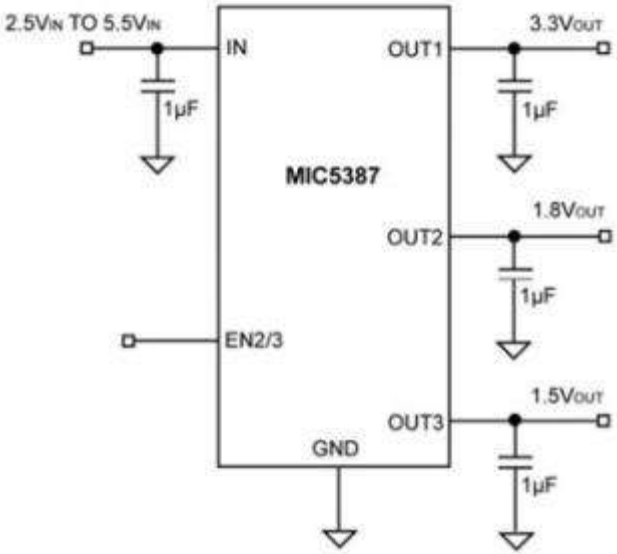

<< BACK

MIC5156/57/58

Super LDO Regulator Controller

Online Datasheet

Features:

- 4.5mA typical operating current
- <1µA typical standby current
- Low external parts count
- Optional current limit (35mV typical threshold)
- 1% initial output voltage tolerance in most –
  - configurations
- 2% output voltage tolerance over temperature
- Fixed output voltages of 3.3V, 5.0V (MIC5156)
- Fixed output voltages of 3.3V, 5.0V, 12V (MIC5157)
- Programmable (1.3V to 36V) with 2 resistors –
  - (MIC5156/8)
- Internal charge pump voltage tripler (MIC5157/8)
- Enable pin to activate or shutdown the regulator
- Internal gate-to-source protective clamp
- All versions available in DIP and SOIC

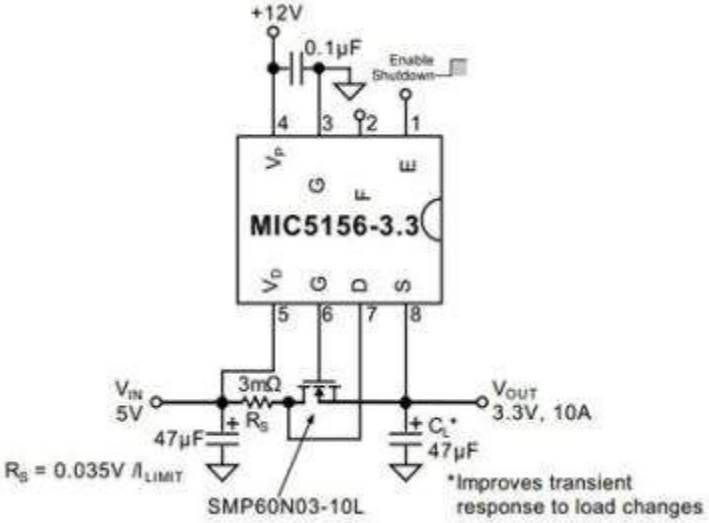

<< BACK

MIC5159

Programmable Current Limit µCap LDO Regulator Controller

Online Datasheet

Features:

- Fast transient response
- Input voltage range: VIN: 1.65V to 5.5V
- ±1.0% initial output tolerance
- Stable with ceramic output capacitor
- Capable up to 10A
- Logic-controlled shutdown
- Programmable current limit
- Excellent line and load regulation –
  - specifications
- Fixed 1.8V or adjustable output voltage down to 1.25V
- Current limit protection
- Extended temperature range: -40ºC to +125ºC
- SOT-23-6 Package

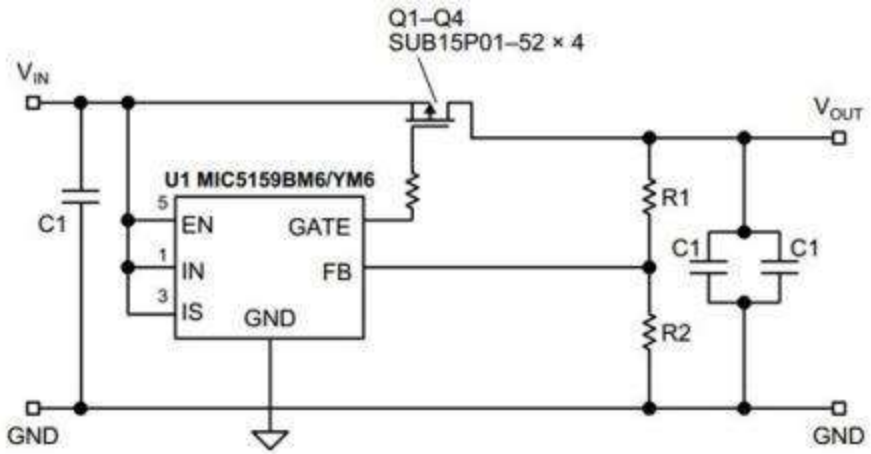

<< BACK

MIC5190

Ultra High-Speed High-Current Active Filter/LDO Controller

Online Datasheet

Features:

- Input voltage range:
  - V_{IN} = 0.9V to 5.5V
- ±1.0% initial output tolerance
- Dropout down to 25mV @ 10A
- Filters out switching frequency noise on input
- Very high large signal bandwidth >500kHz
- PSRR >40dB at 500kHz
- Adjustable output voltage down to 0.5V
- Stable with any output capacitor
- Excellent line and load regulation specifications
- Logic controlled shutdown
- Current limit protection
- 3mm x 3mm 10-lead MLF® and MSOP-10 packages
- Available -40ºC to +125ºC junction temperature

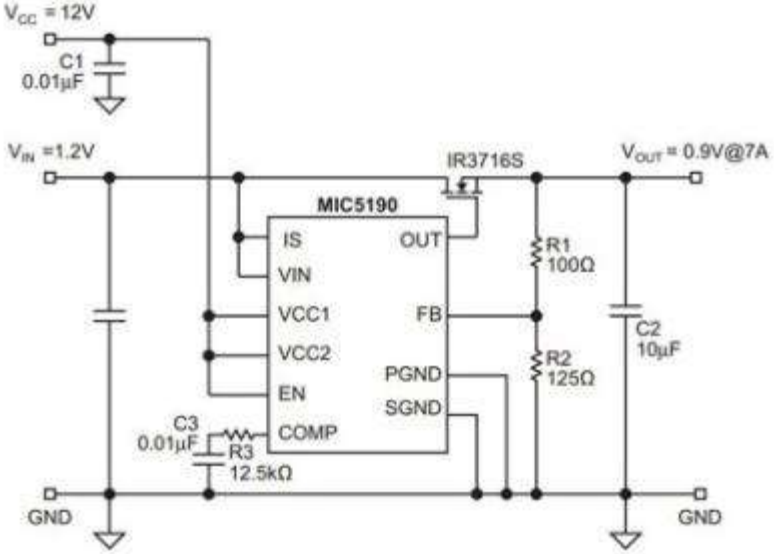

<< BACK

MIC5191

Ultra High-Speed High-Current Active Filter/LDO Controller

Online Datasheet

Features:

- Input voltage range:
  - V_{IN} = 1.0V to 5.5V
- ±1.0% initial output tolerance
- Dropout down to 25mV @ 10A
- Filters out switching frequency noise on input
- Very high large signal bandwidth >500kHz
- PSRR >40dB at 500kHz
- Adjustable output voltage down to 1.0V
- Stable with any output capacitor
- Excellent line and load regulation specifications
- Logic controlled shutdown
- Current limit protection
- 10-lead MLF® and MSOP-10 packages
- Available -40ºC to +125ºC junction temperature

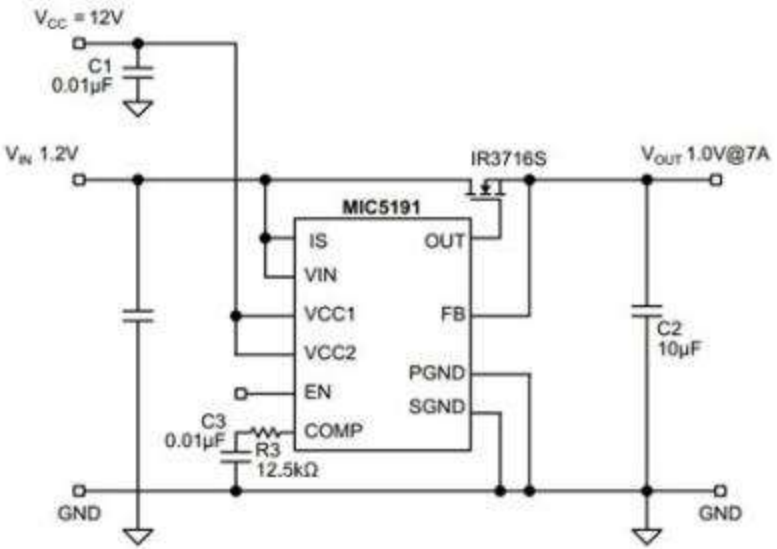

<< BACK

MIC94305

500mA Switch with Ripple Blocker™ Technology

Online Datasheet

Features:

- 1.8V to 3.6V input voltage range
- Active noise rejection over a wide –
  - frequency band: >60dB from –
  - 40kHz to 5MHz
- Rated to 500mA output current
- Current-limit and thermal-limit protected
- 1.6mm x 1.6mm, 6-pin Thin DFN
- Logic-controlled enable pin
- -40ºC to +125ºC junction temperature range

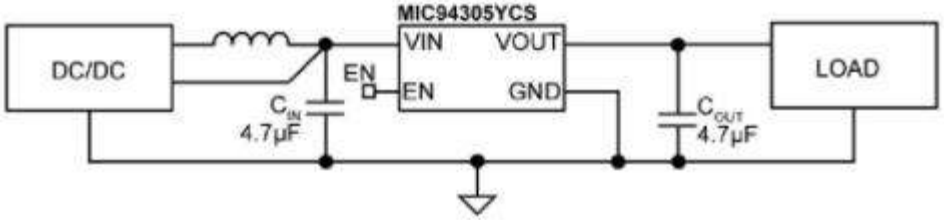

<< BACK

MIC94325/45/55

500mA LDO with Ripple Blocker™ Technology

Online Datasheet

Features:

- 1.8V to 3.6V input voltage range
- Active noise rejection over a wide –
  - frequency band: >50dB from 10Hz –
  - to 5MHz at 500mA load
- Rated to 500mA output current
- Fixed and adjustable output voltages
- Optional output auto-discharge when disabled
- Current-limit and thermal-limit protected
- 1.6mm x 1.6mm, 6-pin Thin DFN
- -40ºC to +125ºC junction temperature range

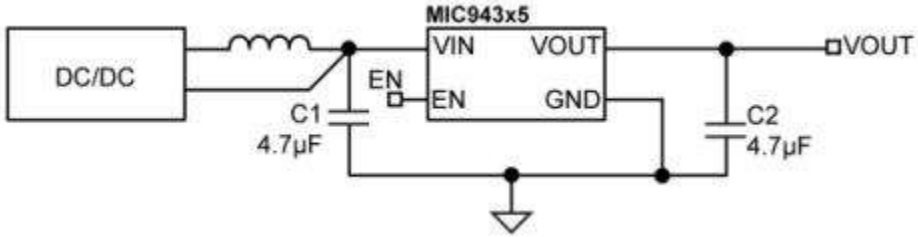

<< BACK

MIC94300

200mA Switch with Ripple Blocker™ Technology

Online Datasheet

Features:

- 1.8V to 3.6V input voltage range
- Active noise rejection over a wide –
  - frequency band: >60dB from –
  - 40kHz to 5MHz
- Rated to 200mA output current
- Current-limit and thermal-limit protected
- 1.2mm x 1.6mm, 4-pin Thin MLF®
- Logic-controlled enable pin
- -40ºC to +125ºC junction temperature range

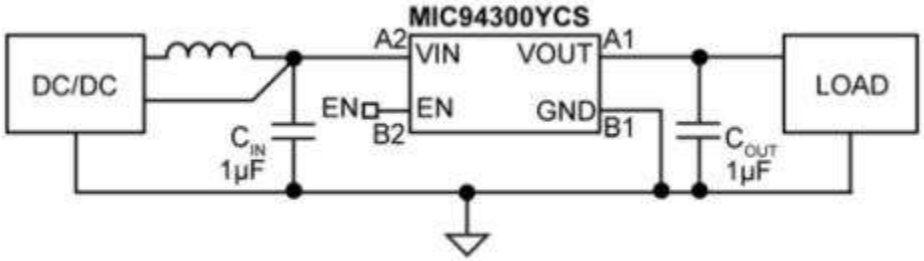

<< BACK

MIC94310

200mA LDO with Ripple Blocker™ Technology

Online Datasheet

Features:

- 1.8V to 3.6V input voltage range
- Active noise rejection over a wide frequency band: Rated >50dB, 10Hz 10MHz
- -40ºC to +125ºC junction temperature range
- Fixed output voltages
- Current-limit and thermal-limit protected
- 1.2mm x 1.6mm, 4-pin Thin DFN
- 5-pin SOT-23
- Logic-controlled enable pin

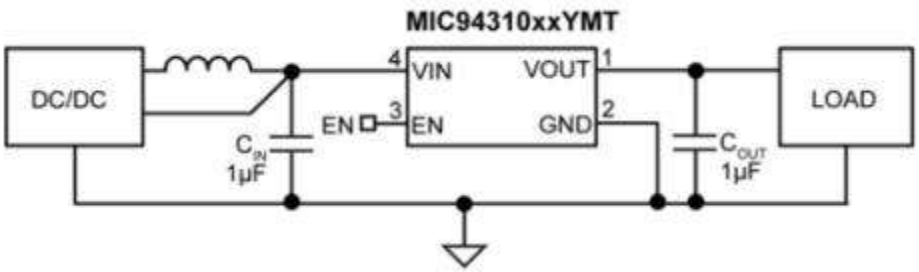

<< BACK

MAQ5280

25mA 120V Low IQ High-PSRR LDO

Online Datasheet

Features:

- Wide input voltage range: 4.5V to 120V DC
- Very low quiescent current: 31µA typical
- 25mA guaranteed output current
- Adjustable output from 1.215V to 5V
- DC voltage protection down to -24V
- Ability to withstand up to +120V DC at the input
- Stable with ceramic output capacitors
- Ultra high PSRR >80dB for RF applications
- High output accuracy:
  - ±2% initial accuracy
  - ±3% over temperature (-40°C to +125°C)
- Thermal shutdown and current limit protection
- Thermally efficient 8-pin ePad SOIC package
- AEC-Q100 qualified

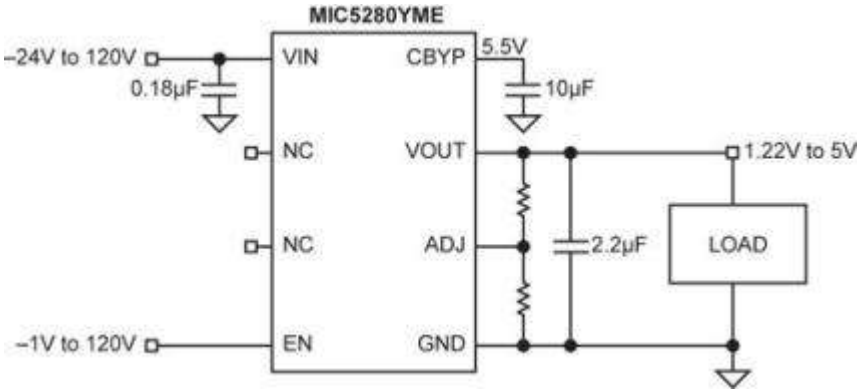

<< BACK

MAQ5281

120VIN 25mA Ultra-Low IQ High-PSRR Linear Regulator

Online Datasheet

Features:

- Wide input voltage range: 6V to 120V DC
- Ultra-low quiescent current: 6µA
- 25mA guaranteed output current
- Adjustable output from 1.27V to 5.5V
- Withstands up to +120V DC at the input
- Stable with ceramic output capacitors
- Ultra-high PSRR <90dB
- Ultra-high line rejection (load dump)
- High output accuracy:
  - ±3% initial accuracy
- Thermal shutdown and current limit protection
- Thermally efficient 8-pin ePad MSOP package

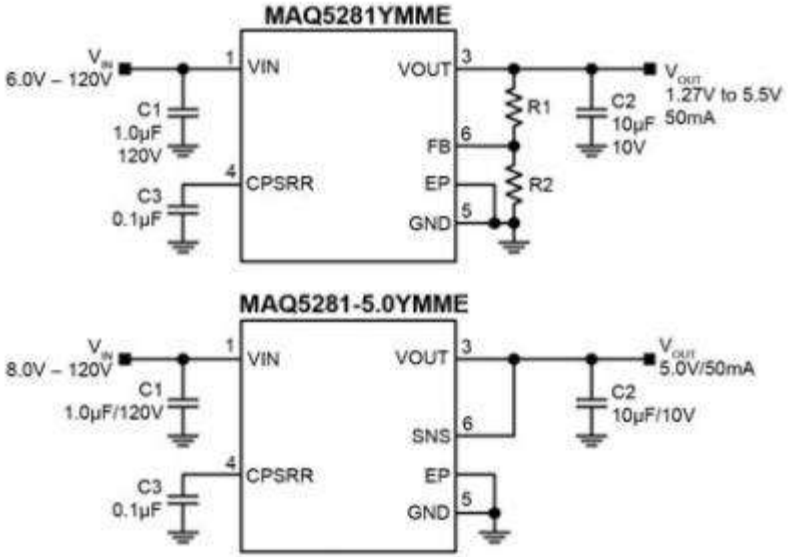

<< BACK

MAQ5282

120V_{IN} 50mA Ultra-Low I_Q High-PSRR Linear Regulator

Online Datasheet

Features:

- AEC-Q100 qualified
- Wide input voltage range: 6V to 120V DC
- Ultra-low quiescent current: 6µA
- 50mA guaranteed output current
- Adjustable output from 1.27V to 5.5V
- Withstands up to +120V DC at the input
- Stable with ceramic output capacitors
- Ultra-high PSRR (80dB at 10kHz)
- Ultra-high line rejection (load dump)
- High output accuracy: ±3% initial accuracy
- Thermal shutdown and current limit protection
- Thermally efficient 8-pin ePad MSOP package

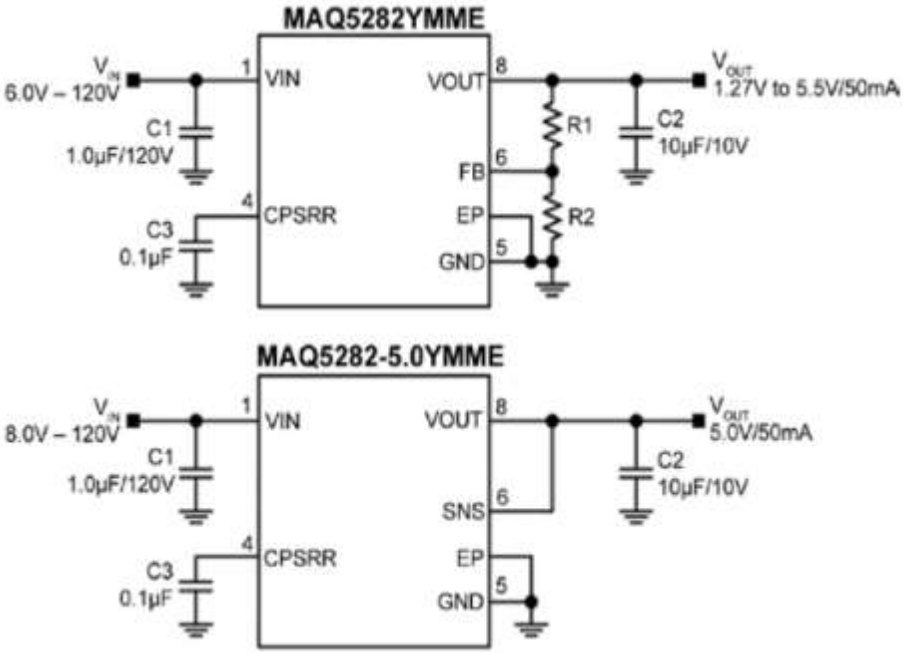

<< BACK

MAQ5283

120V_{IN} 150mA Ultra-Low I_Q High-PSRR Linear Regulator

Online Datasheet

Features:

- AEC-Q100 qualified
- Wide input voltage range: 6V to 120V DC
- Ultra-low quiescent current: 8µA
- 150mA guaranteed output current
- Adjustable output from 1.23V to 5.5V
- Stable with ceramic capacitors
- Ultra-high PSRR (75dB at 10kHz)
- Ultra-high line rejection (load dump)
- High output accuracy: ±3% initial accuracy
- Thermal shutdown and current limit protection
- Thermally efficient, 8-pin ePad SOIC package

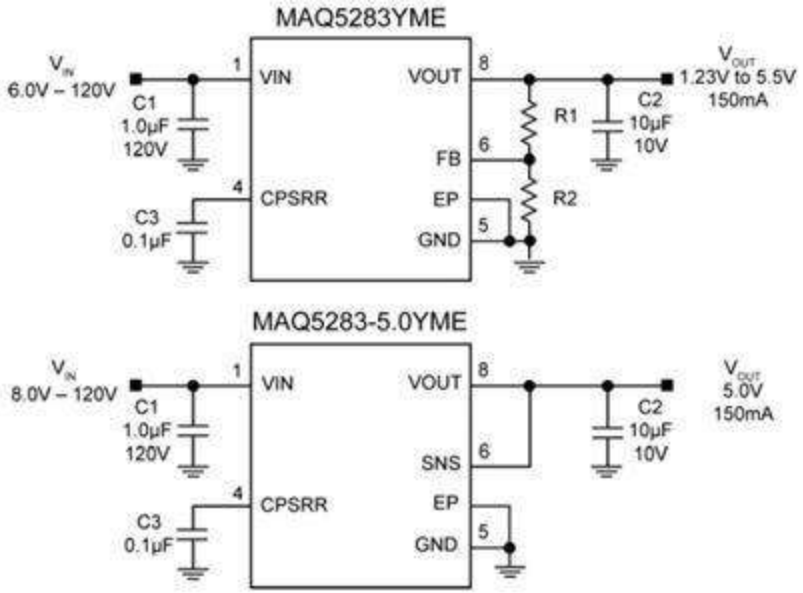

<< BACK

MIC33153

4MHz PWM 1.2A Buck Regulator w/ HyperLight Load® & Power Good

Online Datasheet

Features:

- Internal inductor simplifies design
- Input voltage: 2.7V to 5.5V
- Output voltage: fixed or adjustable from 0.62V to 3.6V
- Up to 1.2A output current
- Up to 93% peak efficiency
- 85% typical efficiency at 1mA
- Power Good (PG) output
- Programmable soft start
- 22µA typical quiescent current
- 4MHz PWM operation in continuous mode
- Ultra-fast transient response
- Low ripple output voltage:
  - 35mVpp ripple in HyperLight Load® mode
  - 7mV output voltage ripple in full PWM mode
- 0.01µA shutdown current
- Thermal shutdown

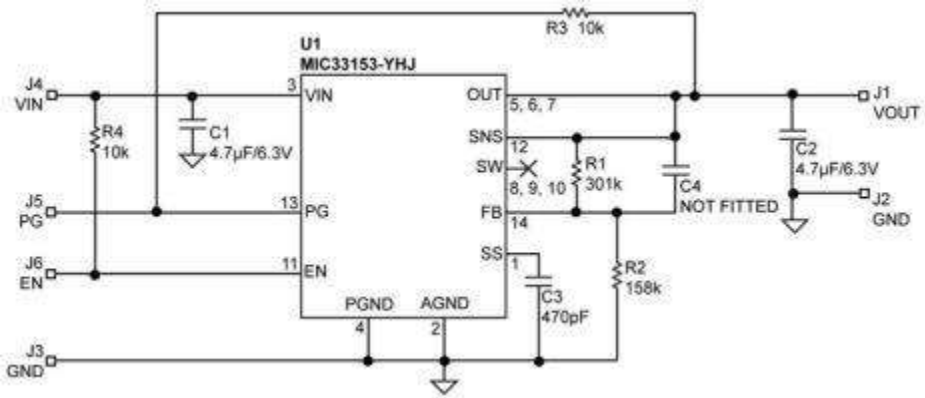

<< BACK

MIC33050

4MHz Internal Inductor PWM Buck Regulator with HyperLight Load®

Online Datasheet

Features:

- Input voltage range: 2.7V to 5.5V
- Fixed output voltage options from 0.72V to 3.3V
- Output current guaranteed up to 600mA
- Ultra fast transient response
- 20µA typical quiescent current
- 4MHz in PWM in constant current mode
- HyperLight Load® mode
- No external inductor required
- Low voltage output ripple:
  - 25mVpp in HyperLight Load® mode
  - 3mV output voltage ripple in full PWM mode
- >93% efficiency, >83% at 1mA
- Fully integrated MOSFET switches
- Micropower shutdown
- Thermal shutdown and current limit protection
- 3mm x 3mm MLF®-12L

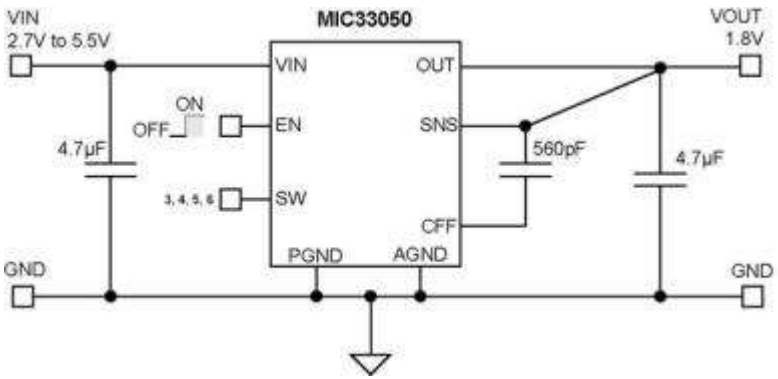

<< BACK

MIC3385

8MHz Power System Module with LDO Standby Mode

Online Datasheet

Features:

- 2.7 to 5.5V supply voltage
- Light load LowQ® LDO mode
- 18µA quiescent current
- Low noise, 75µVrms
- 8MHz PWM mode
- Output current to 600mA
- >90% efficiency
- 100% maximum duty cycle
- Adjustable output voltage option down to 1V
- Ultra-fast transient response
- No external inductor required
- Enables sub 1mm profile solution
- Fully integrated MOSFET switches
- Micropower shutdown
- Thermal shutdown and current limit protection
- 14-pin 3mm x 3.5mm MLF® package

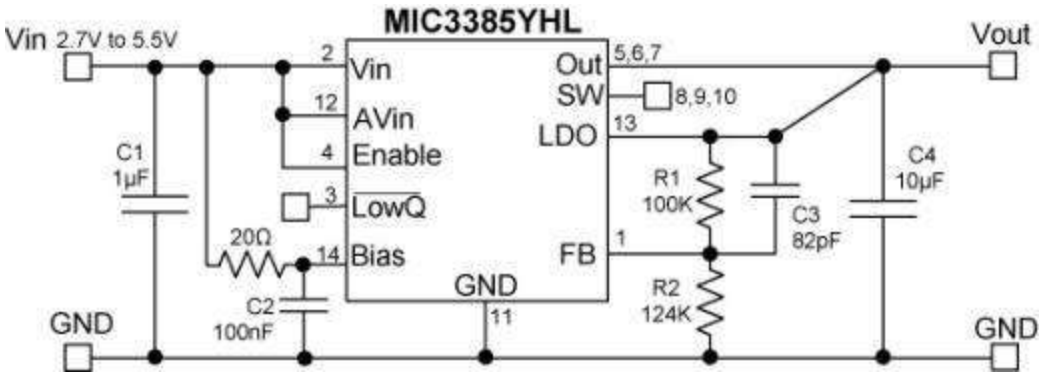

<< BACK

MIC33030

8MHz 400mA Internal Inductor Buck Regulator w/ HyperLight Load®

Online Datasheet

Features:

- Internal inductor simplifies design to two external capacitors
- Input voltage: 2.7V to 5.5V
- Output voltage accuracy of ±2.5% over temperature
- 400mA output current
- Efficiency up to 75% at 1mA
- 21µA typical quiescent current
- Up to 8MHz PWM operation in continuous mode
- Ultra fast transient response
- Low-voltage output ripple:
  - 30mVpp ripple in HyperLight Load® mode
  - 7mV output voltage ripple in full PWM mode
- Fully-integrated MOSFET switches
- 0.01µA shutdown current
- Thermal shutdown and current-limit protection
- Output voltage options: Fixed and adjustable 0.7V to 3.6V
- 2.5mm x 2.0mm 10-Lead HMLF®

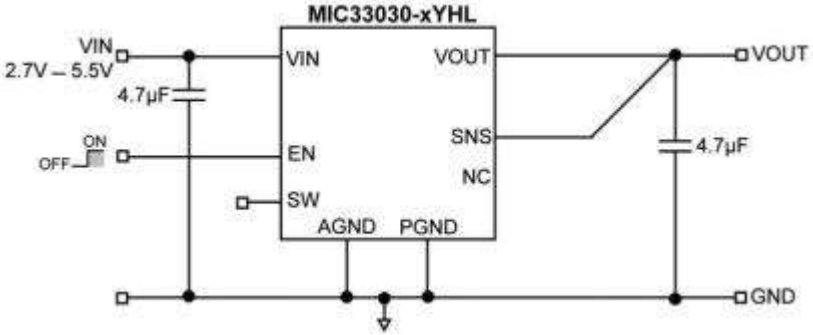

<< BACK

MIC45212

26V 14A DC-to-DC Power Module

Online Datasheet

Features:

- No compensation required
- Up to 14A output current
- >93% peak efficiency
- Output voltage: 0.8V to 5.5V with ±1% accuracy
- Adjustable switching frequency: 200kHz to 600kHz
- Enable input and open-drain power good output
- Hyper Speed Control™ (45212-2) architecture –
  - enables fast transient response
- HyperLight Load® (45212-1) improves light –
  - load efficiency
- Supports safe startup into pre-biased output
- CISPR22, Class B complaint
- -40ºC to +125ºC junction temperature range
- Thermal shutdown protection
- Short-circuit protection with hiccup mode
- Adjustable current limit
- Package: 64-pin 12mm x 12mm x 4mm QFN

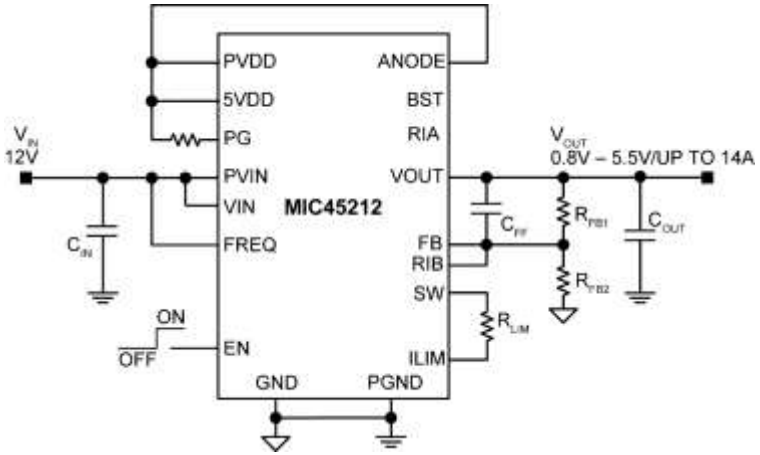

<< BACK

MIC45208

26V 10A DC-to-DC Power Module

Online Datasheet

Features:

- No compensation required
- Up to 10A output current
- >93% peak efficiency
- Output voltage: 0.8V to 5.5V with ±1% accuracy
- Adjustable switching frequency: 200kHz to 600kHz
- Enable input and open-drain power good output
- Hyper Speed Control™ (45208-2) architecture –
  - enables fast transient response
- HyperLight Load® (45208-1) improves light load –
  - efficiency
- Supports safe startup into pre-biased output
- CISPR22, Class B complaint
- -40ºC to +125ºC junction temperature range
- Thermal shutdown protection
- Short-circuit protection with hiccup mode
- Adjustable current limit
- Package: 52-pin 10mm x 10mm x 4mm QFN

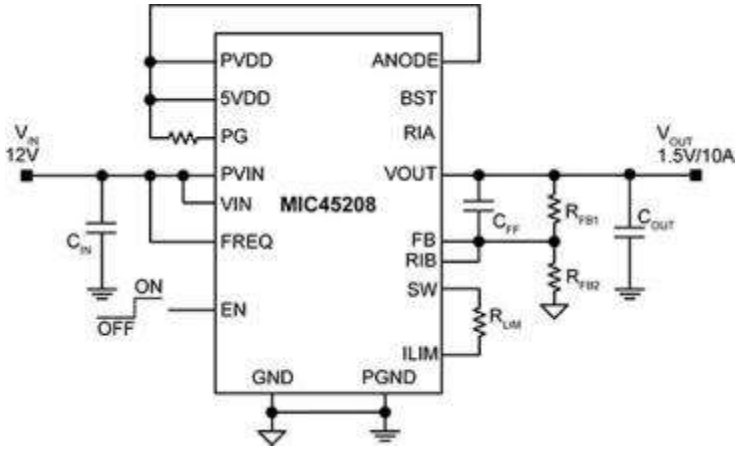

<< BACK

MIC45205

26V 6A DC-to-DC Power Module

Online Datasheet

Features:

- No compensation required
- Up to 6A output current
- >93% peak efficiency
- Output voltage: 0.8V to 5.5V with ±1% accuracy
- Adjustable switching frequency: 200kHz to 600kHz
- Enable input and open-drain power good output
- Hyper Speed Control™ (45205-2) architecture enables fast transient response
- HyperLight Load® (45205-1) improves light load efficiency
- Supports safe startup into pre-biased output
- CISPR22, Class B complaint
- -40ºC to +125ºC junction temperature range
- Thermal shutdown protection
- Short-circuit protection with hiccup mode
- Adjustable current limit
- Package: 52-pin 8mm x 8mm x 3mm QFN

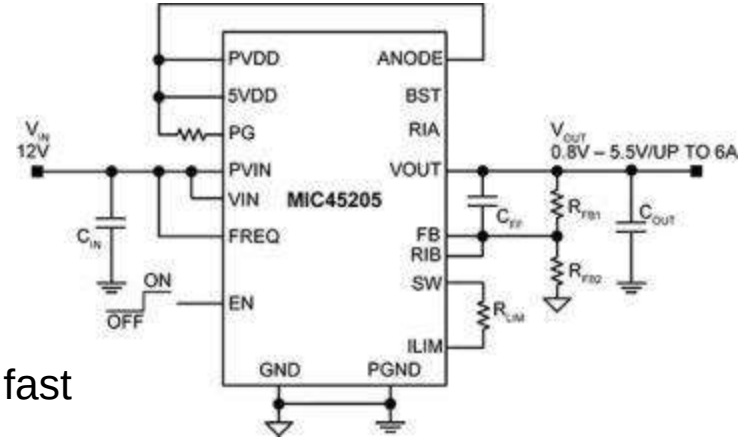

<< BACK

MIC45116

600 KHz 6A High Density Power Module w/ Hyper Speed & Hyper Light

Online Datasheet

Features:

- Highly integrated solution including controller, -- inductor, FETs, and passives
- Hyper Speed Control® architecture for fast –- load transient response
- HyperLight Load® operation for high efficiency at light loads
- Adjustable output voltage: 0.8V to 5V
- Wide input operating range: 4.75V to 20V
- 1% accurate internal reference
- 600 kHz Fixed switching frequency
- Adjustable current limit and ripple injection
- Hiccup mode short circuit protection
- Thermal protection
- Safe startup into pre-biased output
- 8 mm x 8 mm X 3 mm, 52 pin QFN package
- -40°C to +125°C temperature range

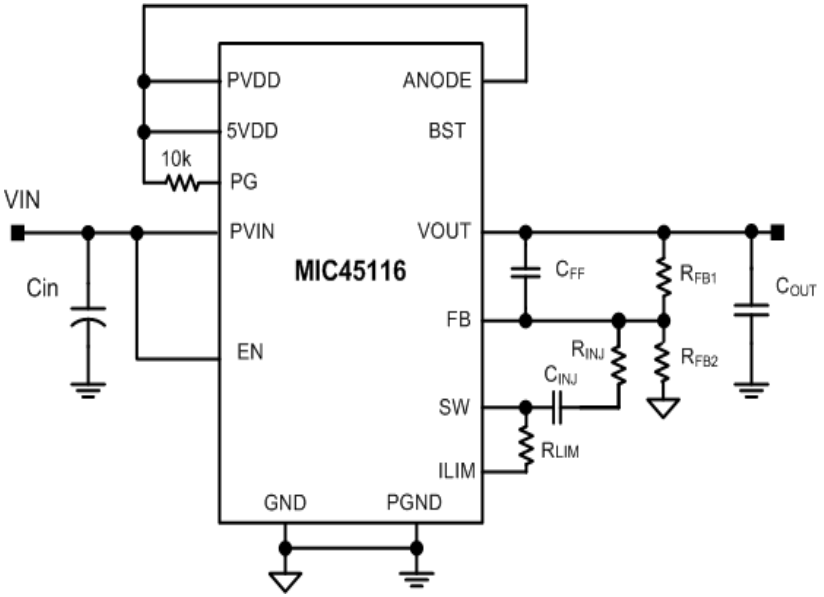

Applications

- General purpose High density POL application
- Datacom/Networking/Computing
- Storage
- Base Stations
- Industrial
- FPGA Power

<< BACK

MIC45404

19V 5A Ultra Low Profile Power Module

Online Datasheet

Features:

- Input voltage range: 4V to 19V
- 5A output current
- > 90% efficiency over wide load –
  - range
- 9 pin-selectable output voltage –
  - values (GND/float/VDDA): 0.7V, -
  - 0.8V, 0.9V, 1.0V, 1.2V, 1.5V, -
  - 1.8V, 2.5V, 3.3V
- Pin-selectable switching frequency –
  - (400kHz, 565kHz, 790kHz)
- Capacitor-adjustable turn-on delay –
  - at EN/DLY
- Supports safe pre-biased start-up
- Thermal shutdown
- Hiccup mode short-circuit protection
- -40ºC to +125ºC operating –
  - temperature range
- 54-pin 10mm x 6mm QFN package
- Ultra-Low profile: 2mm package height

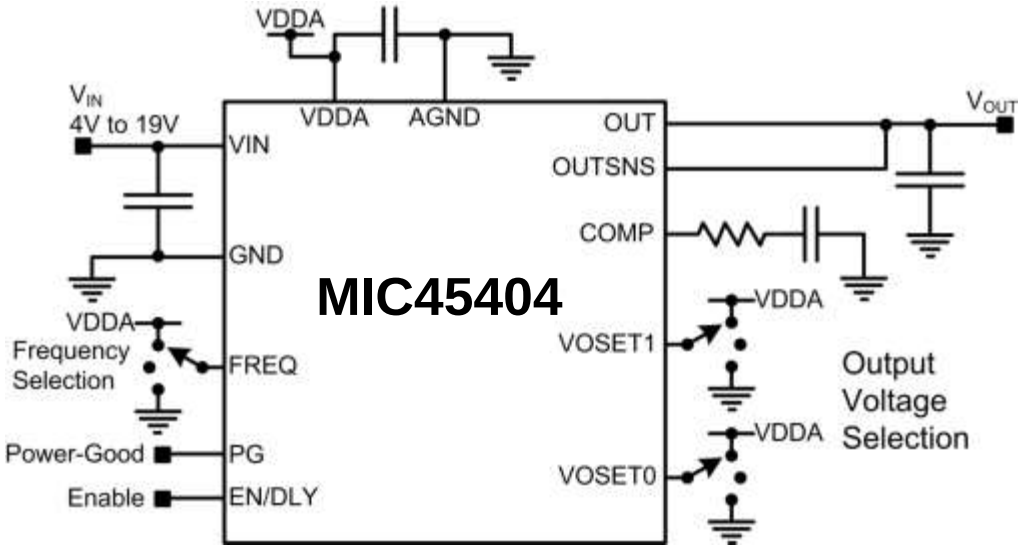

Applications

- Network Switches and Routers
- Base stations, Telecom
- Servers & Storage
- SSD
- Industrial
- FPGA and DSP Power

<< BACK

MIC28303

50V 3A DC-to-DC Power Module

Online Datasheet

Features:

- Easy to use:
  - Stable with low-ESR ceramic output capacitor
  - No compensation and no inductor to choose
- 4.5V to 50V input voltage
- Single-supply operation
- Power Good (PG) output
- Low radiated emission (EMI) per EN55022, Class B
- Adjustable current limit
- Adjustable output voltage from 0.9V to 24V (also limited by duty cycle)
- 200kHz to 600kHz, programmable switching frequency
- Supports safe start-up into a pre-biased output
- -40ºC to +125ºC junction temperature range
- Package: 64-pin, 12mm x 12mm x 3mm QFN

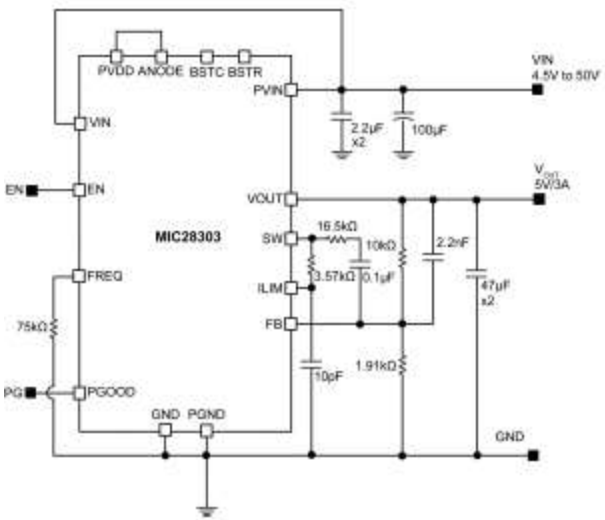

<< BACK

MIC28304

70V 3A DC-to-DC Power Module

Online Datasheet

Features:

- Easy to use:
  - Stable with low-ESR ceramic output capacitor
  - No compensation and no inductor to choose
- 4.5V to 70V input voltage
- HyperLight Load® Control (MIC28304-1)
- Hyper Speed Control™ (MIC28304-2)
- Single-supply operation
- Power Good (PG) output
- Hiccup mode current limit
- Low radiated emission (EMI) per EN55022, class B
- 5ms internal soft-start, internal compensation, and thermal shutdown
- Adjustable current limit
- 0.8V Reference voltage with ±1% accuracy
- Adjustable output voltage from 0.8V to 24V (also limited by duty cycle)
- 200kHz to 600kHz, programmable switching frequency
- Supports safe start-up into a pre-biased output
- Package: 64-pin, 12mm x 12mm x 3.5mm QFN

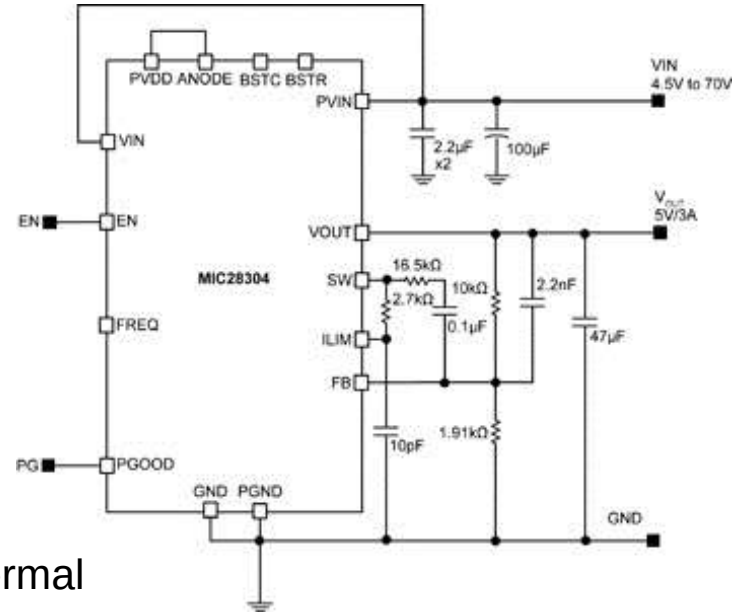

<< BACK

MIC7401

5-Ch Buck Regulator Plus One-Boost w/ HyperLight Load®, I2C Control

Online Datasheet

Features:

- Input voltage: 2.4V to 5.5V
- Five independent synchronous bucks up to 3A
- One independent non-synchronous boost 200mA
- 200µA quiescent current (all regulators on)
- 5µA typical shutdown current
- 93% peak buck efficiency, 85% typical efficiency at 1mA
- Dual power mode: stand-by and normal mode
- I2C interface up to 3.4MHz
- I2C on-the-fly EEPROM programmability, featuring:
    - Buck and boost output voltage scaling
    - Power-on-Reset (PoR) threshold and delay
    - Power-up sequencing/sequencing delay
    - Buck and boost current limit
    - Buck and boost pull-down when disabled
    - Individual ON, OFF, and stand-by modes
    - Soft-start and global power-good masking
- 23µA buck, 70µA boost typ quiescent currents
- 1.5% output accuracy over temperature/line/load
- Thermal-shutdown and current-limit protection
- 36-pin 4.5mm x 4.5mm x 0.85mm FQFN package

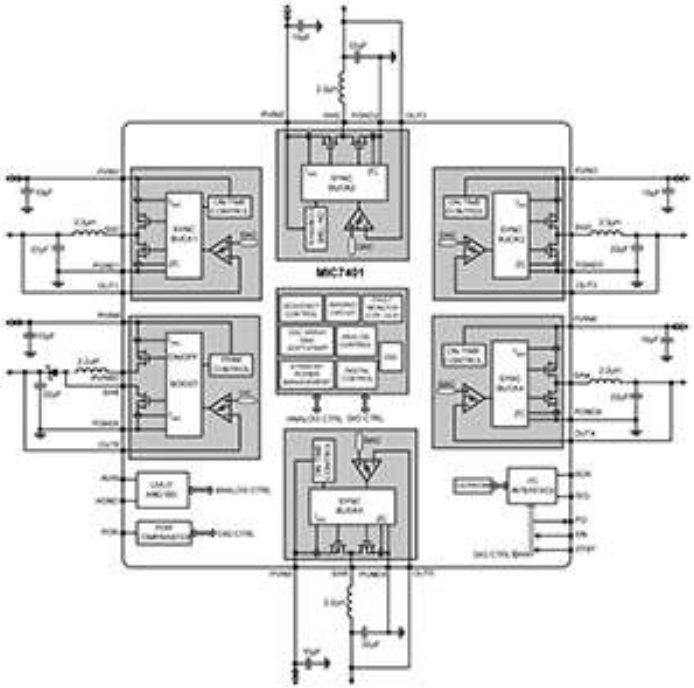

<< BACK

MIC7400

5-Ch Buck Regulator Plus One-Boost, HyperLight Load® & I2C Control

Online Datasheet

Features:

- Input voltage: 2.4V to 5.5V
- Five independent synchronous bucks up to 3A
- One independent non-synchronous boost 200mA
- 200µA quiescent current (all regulators on)
- Dual power mode: stand-by and normal mode
- I2C interface up to 3.4MHz
- 93% peak buck efficiency, 85% typ. efficiency at 1mA
- I2C on-the-fly EEPROM programmability, featuring:
  - Buck and boost output voltage scaling
  - Power-on-reset threshold and delay
  - Power-up sequencing/sequencing delay
  - Buck and boost current limit
  - Buck and boost pull-down when disabled
  - Individual ON, OFF, and standby modes
  - Soft-start and global power-good masking
- 1.5% output accuracy over temperature/line/load

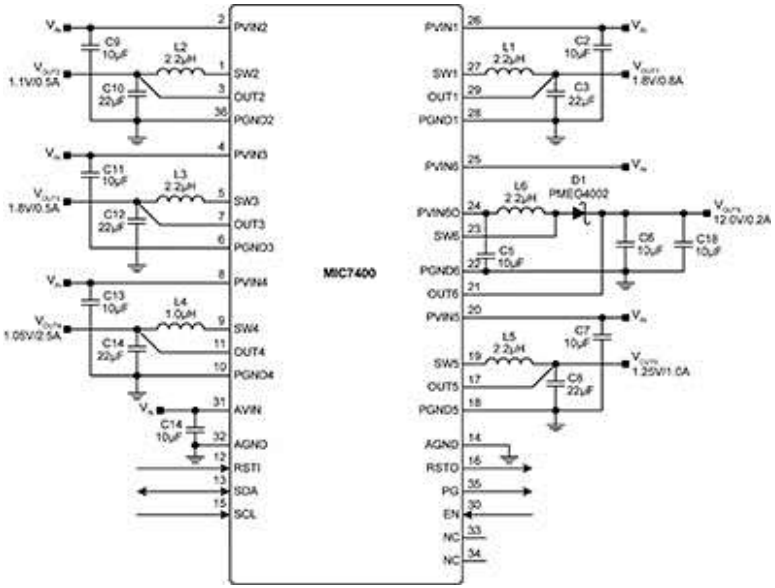

<< BACK

MIC2225

2MHz PWM Synchronous Buck Regulator with 300mA LDO

Online Datasheet

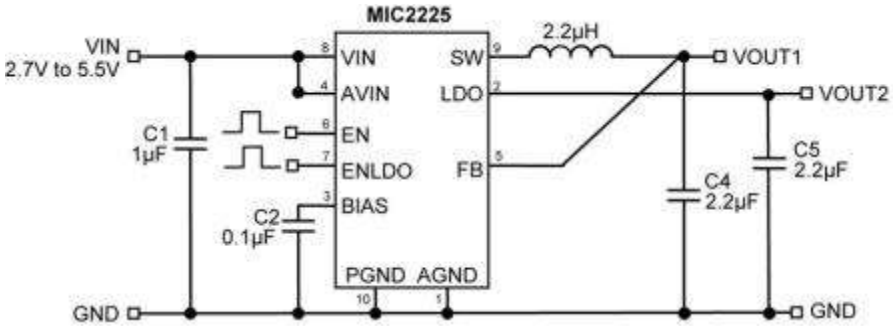

Features:

- Features:
- 2.7V to 5.5V supply voltage
- 2MHz PWM mode
- Output current to 600mA
- >95% efficiency
- Stable with 2.2µF ceramic output capacitor
- Fully integrated MOSFET switches
- Micropower shutdown (1mA in shutdown)
- Pb-free 10-pin 2mm x 2mm Thin MLF® package
- -40ºC to +125ºC junction temperature range

LDO:

- V_{IN} range 2.7V to 5.5V
- 300mA output current
- Output voltage down to 0.8V
- Thermal shutdown protection

<< BACK

MIC23060

Sequenced PMIC with HyperLight Load® DC/DC and Dual Input LDO

Online Datasheet

Features:

- 2.7V to 5.5V supply voltage range
- Tiny 12-pin 2.5mm x 2.5mm Thin MLF® package
- Dual Input LDO™ can turn-on prior to DC/DC –
  - converter and automatically switch post –
  - regulation from the DC/DC converter after it starts

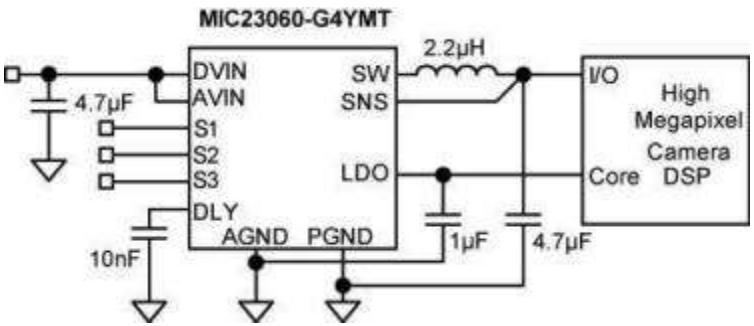

HyperLight Load® DC/DC Converter:

- 4MHz frequency in continuous PWM mode
- Tiny 2.2µH inductor, 4.7µF capacitor
- 85% Efficiency at 1mA output current
- >90% peak efficiency

LDO Regulator:

- 300mA output current capability
- High Accuracy: ±3% over temperature
- High PSRR: greater than 60dB
- Very low quiescent current: 16µA

<< BACK

MIC2800

Digital Baby Power Management IC

Online Datasheet

Features:

- 2.7V to 5.5V input voltage range
- 2MHz DC/DC converter and two stand – - alone LDOs
- Integrated power-on reset (OR function – - for all outputs)
- 30µA Total IQ when in LowQ® mode

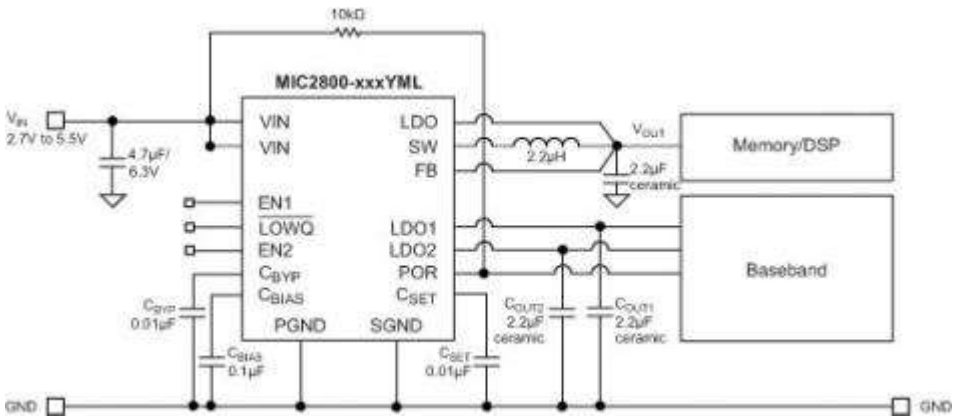

DC/DC Converter:

- DC to DC Converter
- Output current to 600mA in PWM mode
- LowQ® Mode: no noise light load mode
- 75µVRMS output noise in LowQ® mode
- 2 MHz PWM operation in normal mode

LDOs:

- LDOs
- Ideal for 1.8V to 1.5V conversion
- 300mA output current from 1.8V input
- Output voltage down to 0.8V
- LDO2: 300mA output current capable

<< BACK

MIC2807

RF PA PMIC 2MHz 500mA DC/DC w/DAC Input, Bypass Switch & Dual LDO

Online Datasheet

Features:

- 2.7V to 5.5V input voltage range
- Stable with ceramic output capacitors
- Tiny 17-pin 2.5mm x 2.8mm MLF® Package

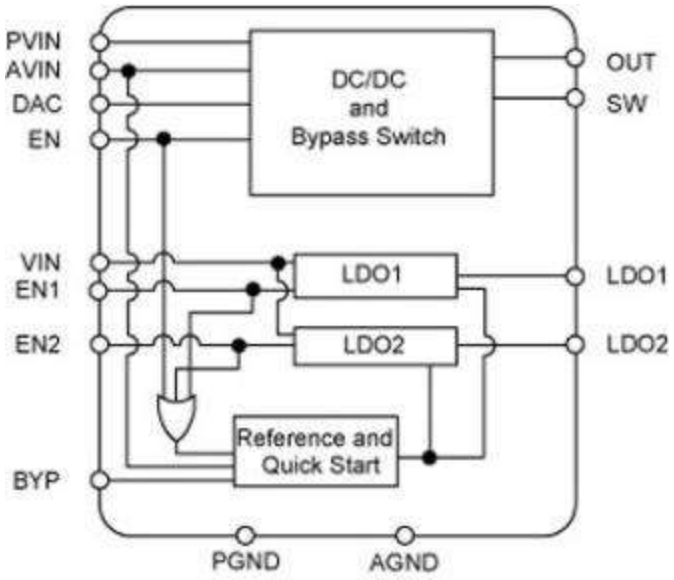

RF PA Power Supply DC/DC Converter:

- Adjustable output power supply - DAC controlled
  - V_{OUT} = VDAC x 3
- Bypass mode operation:
  - Internal 95mΩ switch between PVIN and – - OUT pins
  - V_{DAC} >1.2V
- Tiny 4.7µH, 1µF output inductor and capacitor

Dual Low Noise Low Dropout Regulators:

- High accuracy: ±2% over temperature
- Very low output noise: 32 μV_{rms}
- LDO1: 200mA output current capability
- LDO2: 30mA output current capability

<< BACK

MIC2810

Digital PMIC 2MHz 600mA DC/DC w/Dual 300mA/300mA Low VIN LDOs

Online Datasheet

Features:

- LowQ® mode:
  - 30µA Total IQ when in LowQ® mode
- Tiny 16-pin 3mm x 3mm MLF® package
- DC/DC Converter
- 2.7V to 5.5V input voltage range
- Output current to 600mA in PWM mode
- LowQ® Mode: no noise light load mode:
  - 53µVrms Output noise in LowQ® -
    - mode

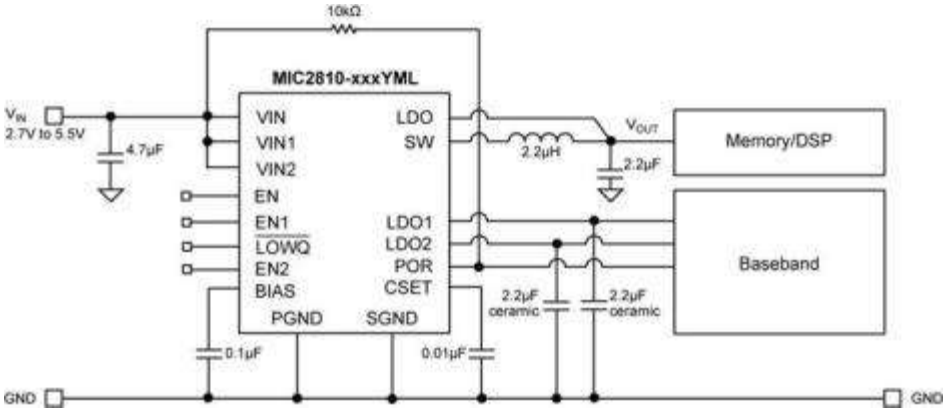

LDOs:

- LDO1:
  - 1.65V to 5.5V input voltage range
  - 300mA Output current
- LDO2:
  - 2.7V to 5.5V input voltage range
  - 300mA Output current

<< BACK

MIC2811

Digital PMIC 2MHz 600mA DC/DC with Triple 300mA LDOs

Online Datasheet

Features:

- 2MHz DC/DC converter and 3 LDOs
- ±2% Output Voltage Accuracy on all outputs

DC/DC Converter:

- 2.7V to 5.5V input voltage range
- Output current to 600mA
- Up to 86% efficiency (1.2V output)

LDO 1 and 2:

- 1.65V to 5.5V input voltage range
- Fixed Output voltage as low as 0.8V
- 70dB PSRR at 1kHz

LDO 3:

- 2.7V to 5.5V input voltage range
- 300mA output current
- Fixed Output voltage as low as 1.0V

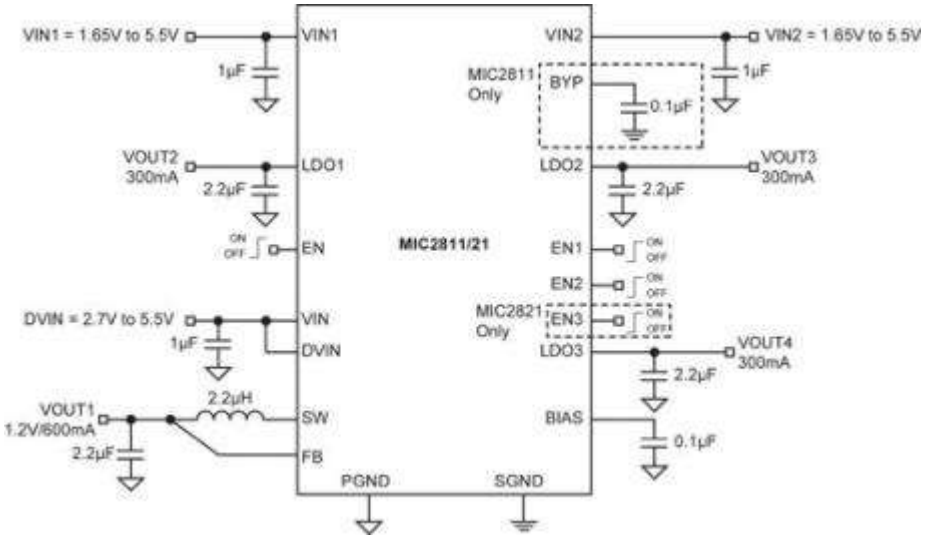

<< BACK

MIC2811

Digital PMIC 2MHz 600mA DC/DC with Triple 300mA LDOs

Online Datasheet

Features:

- 2MHz DC/DC converter and 3 LDOs
- ±2% Output Voltage Accuracy on all outputs

DC/DC Converter:

- 2.7V to 5.5V input voltage range
- Output current to 600mA
- Up to 86% efficiency (1.2V output)

LDO 1 and 2:

- 1.65V to 5.5V input voltage range
- Fixed Output voltage as low as 0.8V
- 70dB PSRR at 1kHz

LDO 3:

- 2.7V to 5.5V input voltage range
- 300mA output current
- Fixed Output voltage as low as 1.0V

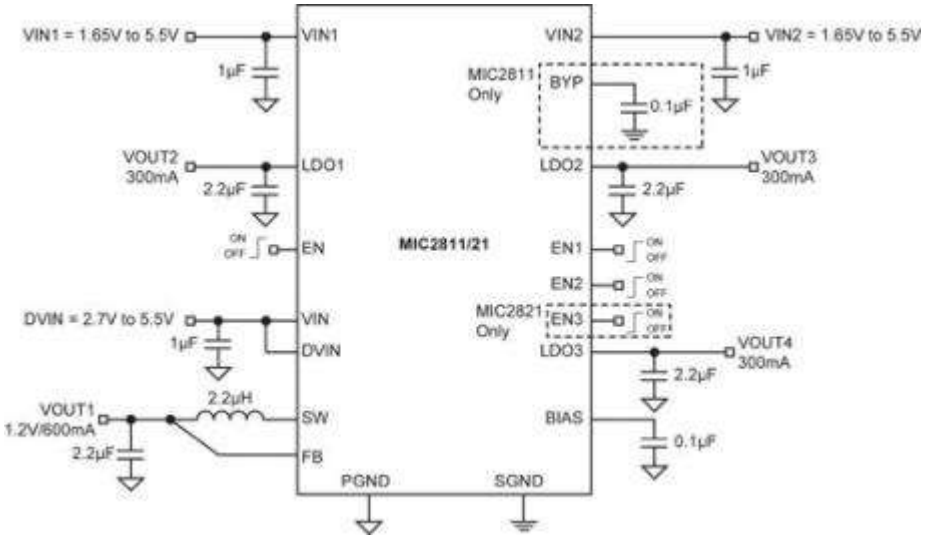

<< BACK

MIC2821

Digital PMIC 2MHz 600mA DC/DC with Triple 300mA LDOs

Online Datasheet

Features:

- 2MHz DC/DC converter and 3 LDOs
- ±2% Output Voltage Accuracy on all outputs

DC/DC Converter:

- 2.7V to 5.5V input voltage range
- 2MHz PWM operation
- Up to 86% efficiency (1.2V output)

LDO 1 and 2:

- 1.65V to 5.5V input voltage range
- Fixed Output voltage as low as 0.8V
- 70dB PSRR at 1kHz

LDO 3:

- 2.7V to 5.5V input voltage range
- 300mA output current
- Fixed Output voltage as low as 1.0V

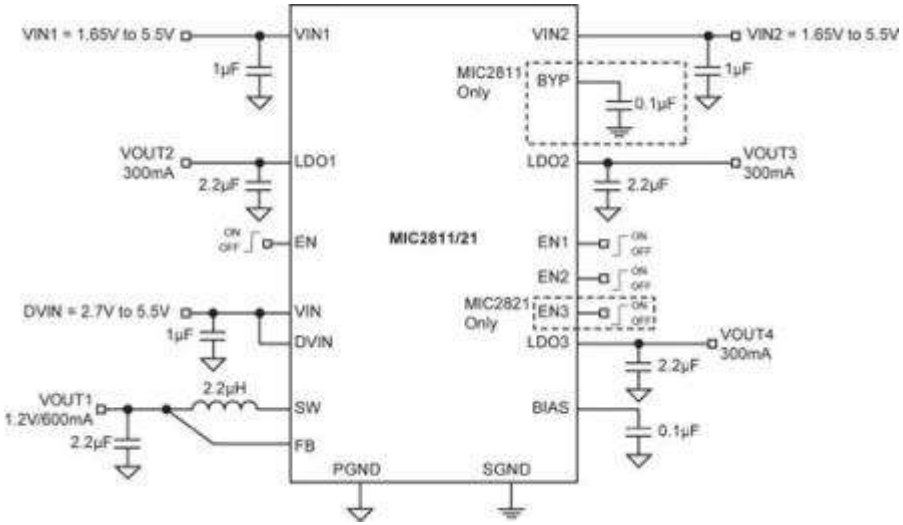

<< BACK

MIC2826

Quad Output PMIC with HyperLight Load® DC/DC & 3 LDOs

Online Datasheet

Features:

- -40ºC to +125ºC junction temperature range
- Thermal shutdown and current-limit protection
- Power On After Fault (POAF) function

DC-DC Synchronous Buck:

- 2.7V to 5.5V input voltage range
- 500mA continuous output current
- HyperLight Load® mode
- Dynamic Voltage Scaling (DVS) range: -
  - 0.8V to 1.8V

LDOs:

- 1.8V to VDVIN input voltage range
- 150mA output current (each LDO)
- Dynamic Voltage Scaling (each LDO)
- Low quiescent current: 50µA (each LDO)
- Low dropout voltage: 50mV @ 50mA

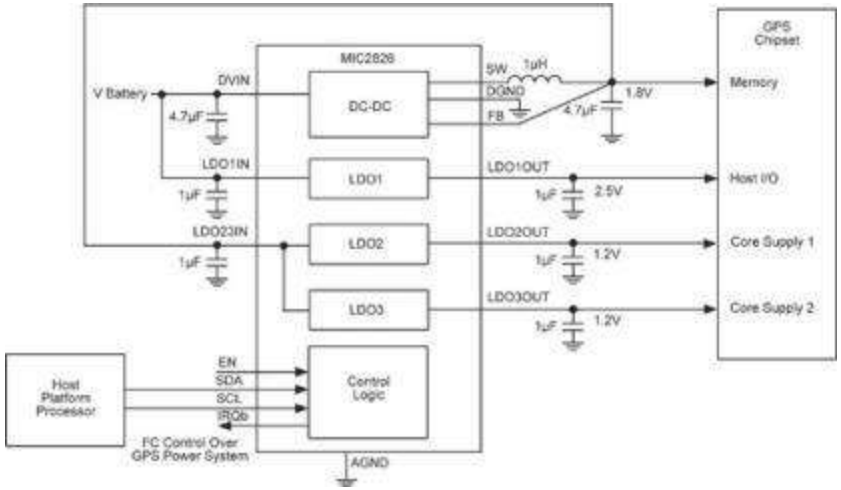

<< BACK

MIC23099

Single AA/AAA Cell Step-Up/Step-Down Regulators w/ Battery Monitoring

Online Datasheet

Features:

- V_{IN} range from 0.85V to 1.6V
- V_{OUT1} (step-up) adjustable from 1.8V to 3.3V
- V_{OUT2} (step-down) adjustable from 1.0V to V_{OUT2}
- V_{OUT1}/400mW and V_{OUT2}/30mA from a single cell
- Minimizes switching noise in the audio band
- Anti-ringing control circuit to minimize EMI
- Turn-on inrush current limiting and soft-start
- Automatic output discharge
- Step-up regulator with output disconnect in –
  - shutdown
- Low-battery indicator
- Power Good (PG) output
- Low output ripple < 10mV
- 14-pin 2.5mm × 2.5mm × 0.55mm thin QFN (TQFN) package
- -40ºC to +125ºC junction temperature range

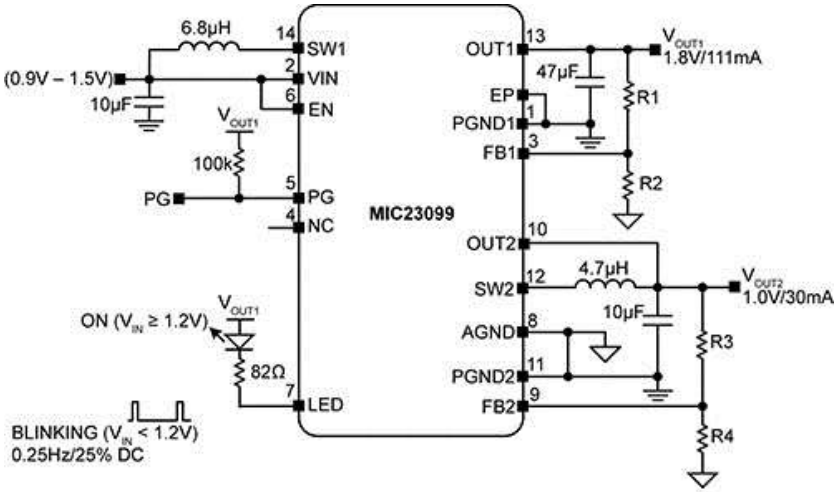

<< BACK

MCP37D31-200

Online Datasheet

Features:

- 16-bit resolution
- 200 Msps sampling rate
- Low power 490 mW at full sample rate, LVDS:
  - 80 mW Standby, 33 mW Shutdown
- >74.7 dBFS SNR at 200 Msps
- >90 dBFS SFDR at 200 Msps
- Internal Digital Down-converter (DDC)
- Decimation filters for improved SNR
- Phase, offset and gain adjust of each channel
- 8-channel mux
- Fractional delay recovery for time-delay –
  - corrections in multi-channel operations
- Input channel bandwidth of 500 MHz
- Output data in serial DDR LVDS or CMOS
- Configuration via SPI
- Industrial temperature range -40°C to –
  - +85°C
- Packaging:
  - VTLA-124 (9 mm x 9 mm x 0.9 mm)
  - TFBGA-121 (8 mm x 8 mm)

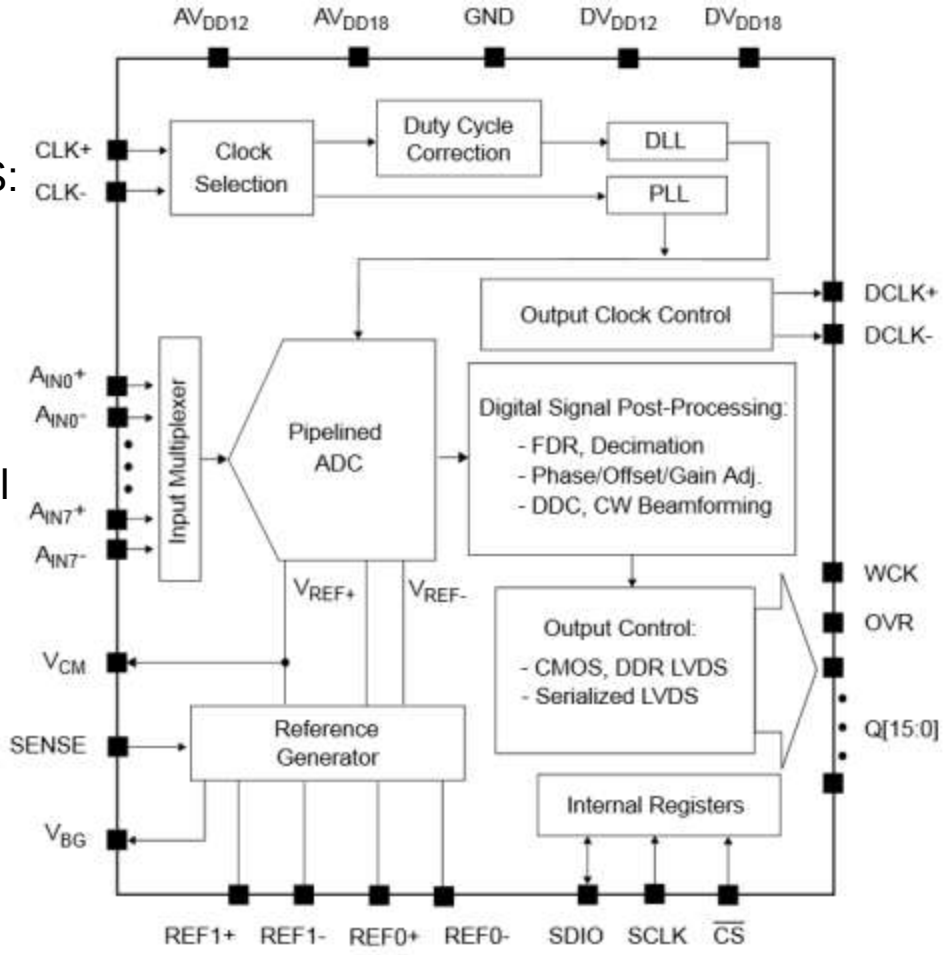

<< BACK

MCP37231-200

Online Datasheet

Features:

- 16-bit resolution
- 200 Msps sampling rate
- Low power 490 mW at full sample rate, LVDS:
  - 80 mW Standby, 33 mW Shutdown
- >74.7 dBFS SNR at 200 Msps
- >90 dBFS SFDR at 200 Msps
- Decimation filters for improved SNR
- Phase, offset and gain adjust of each channel
- 8-channel mux
- Fractional delay recovery for time-delay –
  - corrections in multi-channel operations –
  - (dual/octal-channel modes)
- Input channel bandwidth of 500 MHz
- Output data in serial DDR LVDS or CMOS
- Configuration via SPI
- Industrial temperature range -40°C to +85°C
- Packaging:
  - VTLA-124 (9 mm x 9 mm x 0.9 mm)
  - TFBGA-121 (8 mm x 8 mm)

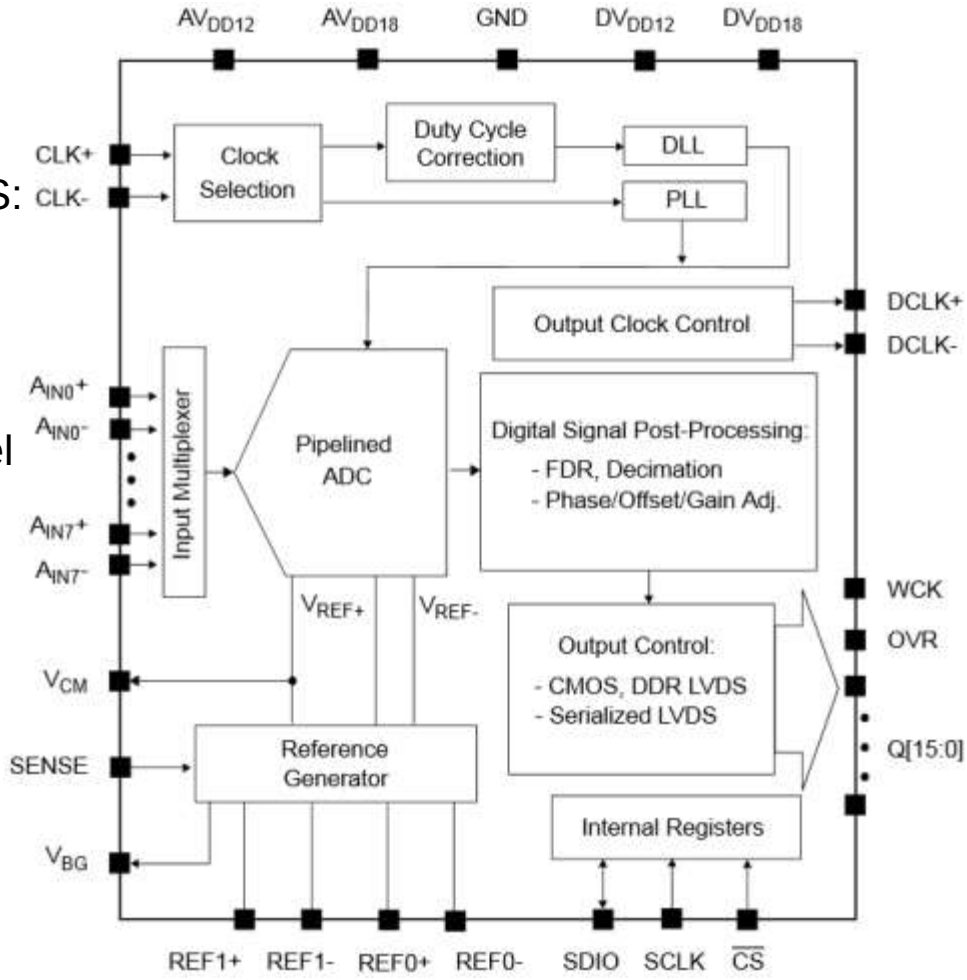

<< BACK

MCP37D21-200

Online Datasheet

Features:

- 14-bit resolution
- 200 Msps sampling rate
- Low power 490 mW at full sample rate, LVDS:
  - 80 mW Standby, 33 mW Shutdown
- >74.2 dBFS SNR at 200 Msps
- >90 dBFS SFDR at 200 Msps
- Internal Digital Down-converter (DDC)
- Decimation filters for improved SNR
- Phase, offset and gain adjust of channels
- 8-channel mux
- Fractional delay recovery for time-delay –
  - corrections in multi-channel operations –
  - (dual/octal-channel modes)
- Input channel bandwidth of 500 MHz
- Output data in serial DDR LVDS or CMOS
- Configuration via SPI
- Industrial temperature range -40°C to +85°C
- Packaging:
  - VTLA-124 (9 mm x 9 mm x 0.9 mm)
  - TFBGA-121 (8 mm x 8 mm)

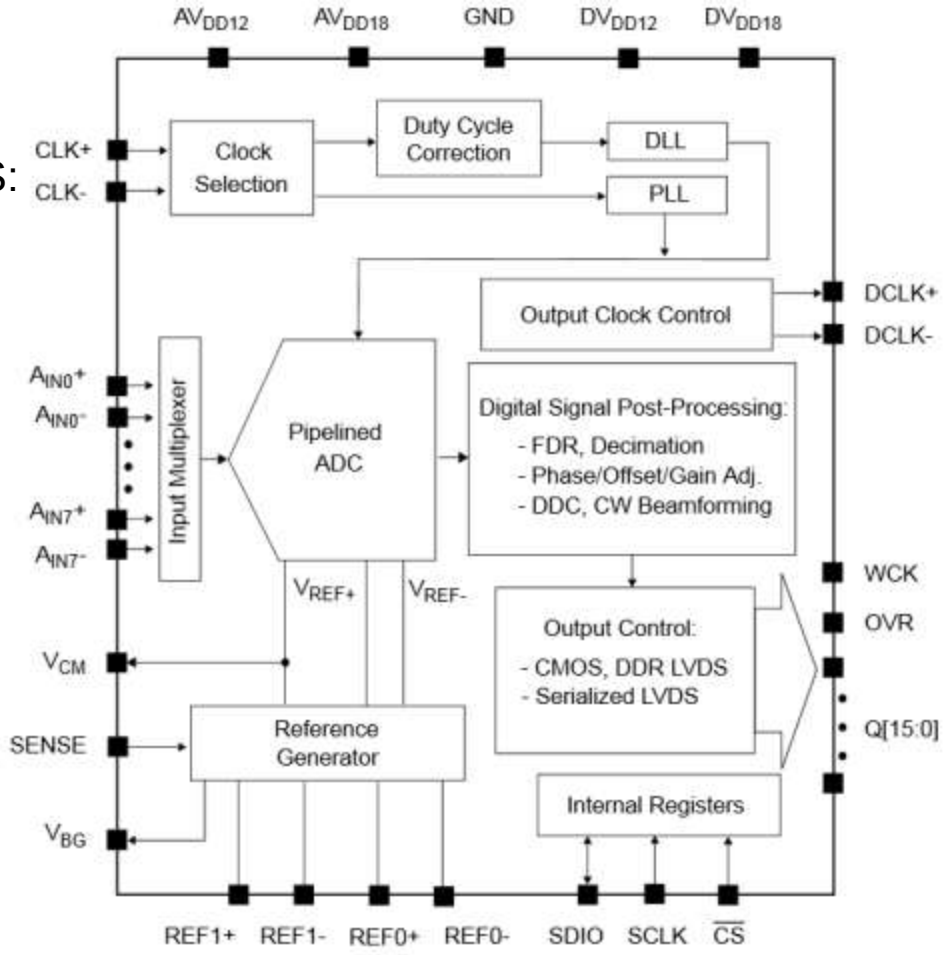

<< BACK

MCP37D11-200

Online Datasheet

Features:

- 12-bit resolution
- 200 Msps sampling rate
- Low power 468 mW at full sample rate, LVDS:
  - 80 mW Standby, 33 mW Shutdown
- >71.3 dBFS SNR at 200 Msps
- >90 dBFS SFDR at 200 Msps
- Internal Digital Down-converter (DDC)
- Decimation filters for improved SNR
- Noise-shaping requantizer
- Phase, offset, gain adjust of channels
- 8-channel mux
- Fractional delay recovery for time-delay –
  - corrections in multi-channel operations
- Input channel bandwidth of 500 MHz
- Output data in serial DDR LVDS or CMOS
- Configuration via SPI
- Industrial temperature range: -40°C to +85°C
- Packaging:
  - VTLA-124 (9 mm x 9 mm x 0.9 mm)
  - TFBGA-121 (8 mm x 8 mm)

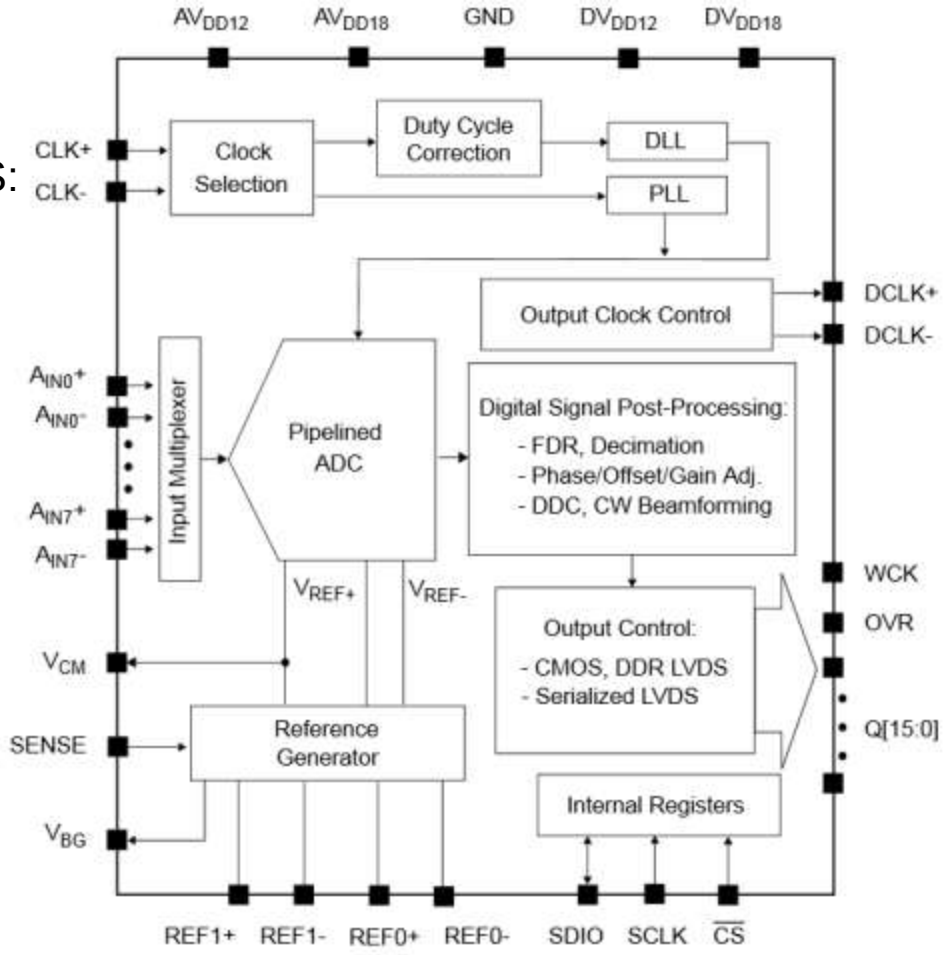

<< BACK

MCP37221-200

Online Datasheet

Features:

- 14-bit resolution
- 200 Msps sampling rate
- Low power 490 mW at full sample rate ,LVDS:
  - 80 mW Standby, 33 mW Shutdown
- >74.2 dBFS SNR at 200 Msps
- >90 dBFS SFDR at 200 Msps
- Decimation filters for improved SNR
- Phase, offset and gain adjust of channels
- 8-channel mux
- Fractional delay recovery for time-delay –
  - corrections in multi-channel operations
- Input channel bandwidth of 500 MHz
- Output data in serial DDR LVDS or CMOS
- Configuration via SPI
- Industrial temperature range: -40°C to +85°C
- Packaging:
  - VTLA-124 (9 mm x 9 mm x 0.9 mm)
  - TFBGA-121 (8 mm x 8 mm)

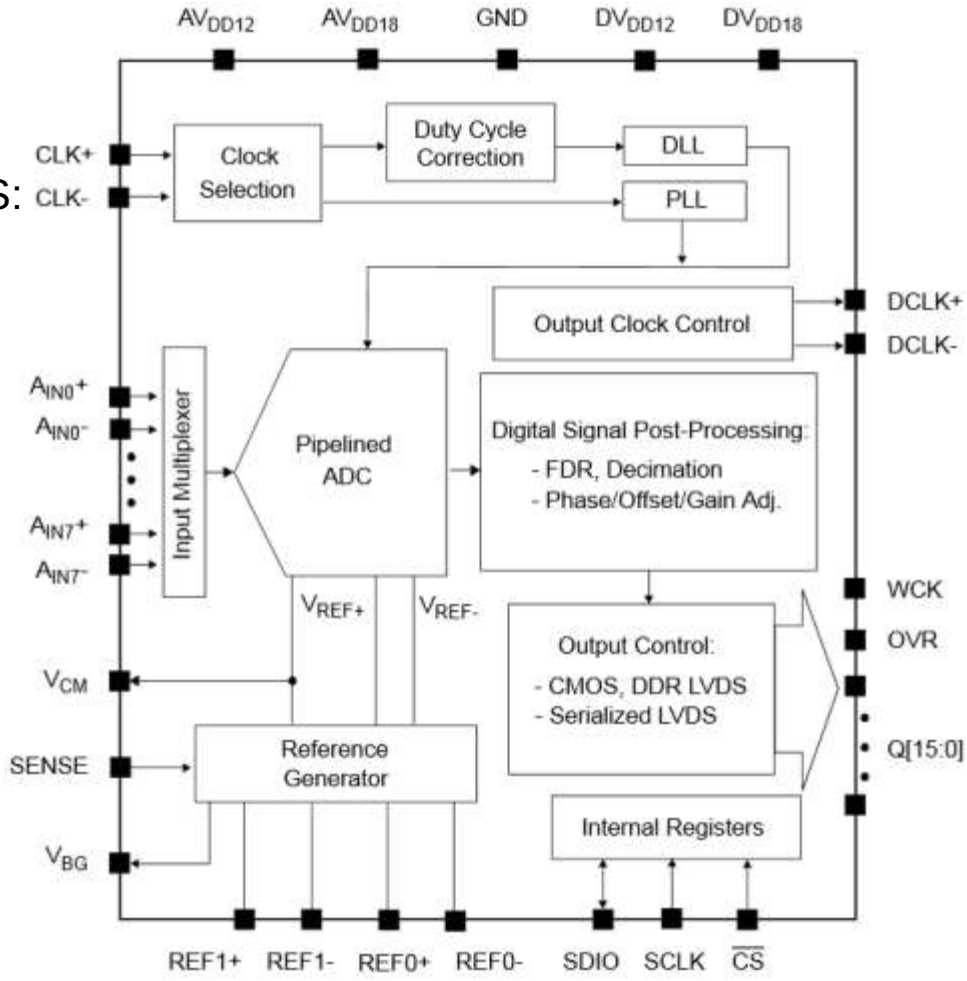

<< BACK

MCP37211-200

Online Datasheet

Features:

- 12-bit resolution
- 200 Msps sampling rate
- Low power 468 mW operation at full –
  - sampling rate, including LVDS digital I/O:
    - 80 mW Standby, 33 mW Shutdown
- >71.3 dBFS SNR at 200 Msps
- >90 dBFS SFDR at 200 Msps
- Decimation filters for improved SNR
- Noise-shaping requantizer
- Phase, offset, gain adjust of channels
- 8-channel mux
- Fractional delay recovery for time-delay –
  - corrections in multi-channel operations
- Input channel bandwidth of 500 MHz
- Output data in serial DDR LVDS or CMOS
- Configuration via SPI
- Industrial temperature range: -40°C to +85°C
- Packaging:
  - VTLA-124 (9 mm x 9 mm x 0.9 mm)
  - TFBGA-121 (8 mm x 8 mm)

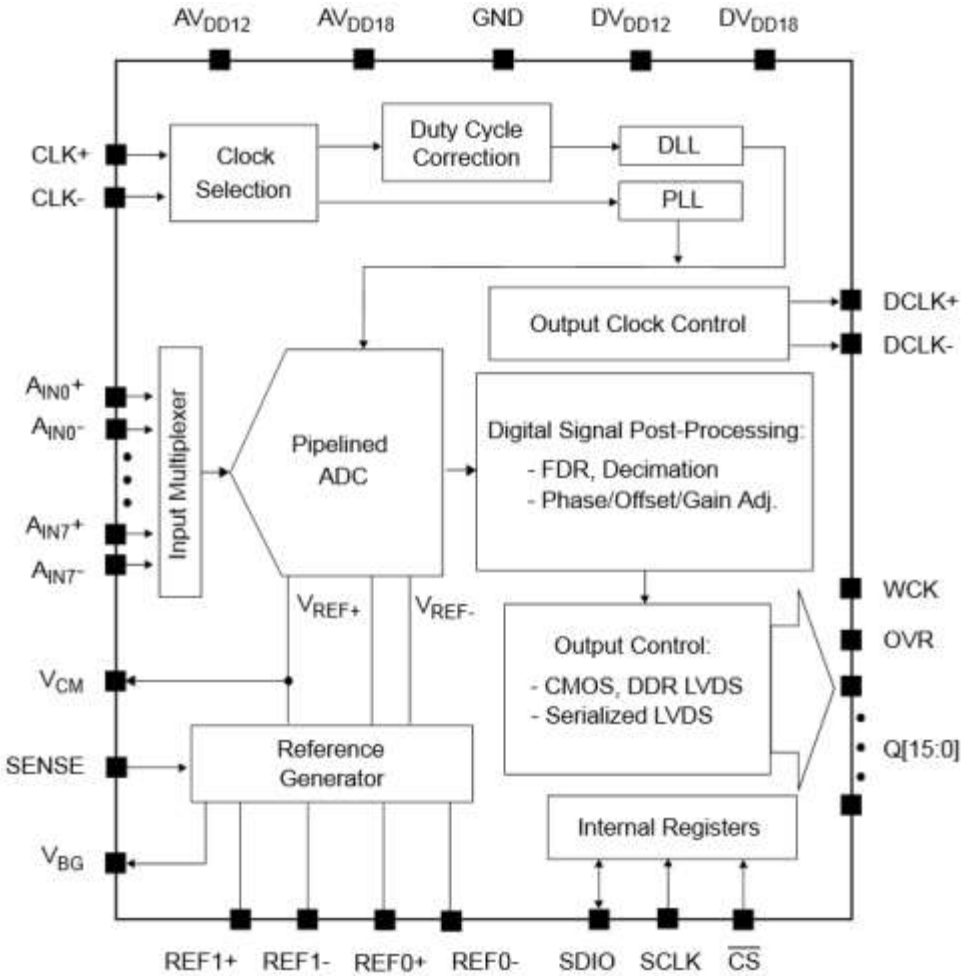

<< BACK

MCP37220-200

Online Datasheet

Features:

- 14-bit resolution
- 200 Msps sampling rate
- Low power 348 mW operation at full sampling – rate, including LVDS digital I/O:
  - 80 mW Standby, 33 mW Shutdown
- 67.8 dBFS SNR at 200 Msps
- 96 dBFS SFDR at 200 Msps
- Decimation filters for improved SNR
- Phase, offset and gain adjustments
- Input channel bandwidth of 650 MHz
- Output data format in serial DDR LVDS or – - parallel CMOS
- Configuration via SPI
- Industrial temperature range: -40°C to +85°C
- Packaging:
  - VTLA-124 (9 mm x 9 mm x 0.9 mm)
  - TFBGA-121 (8 mm x 8 mm)

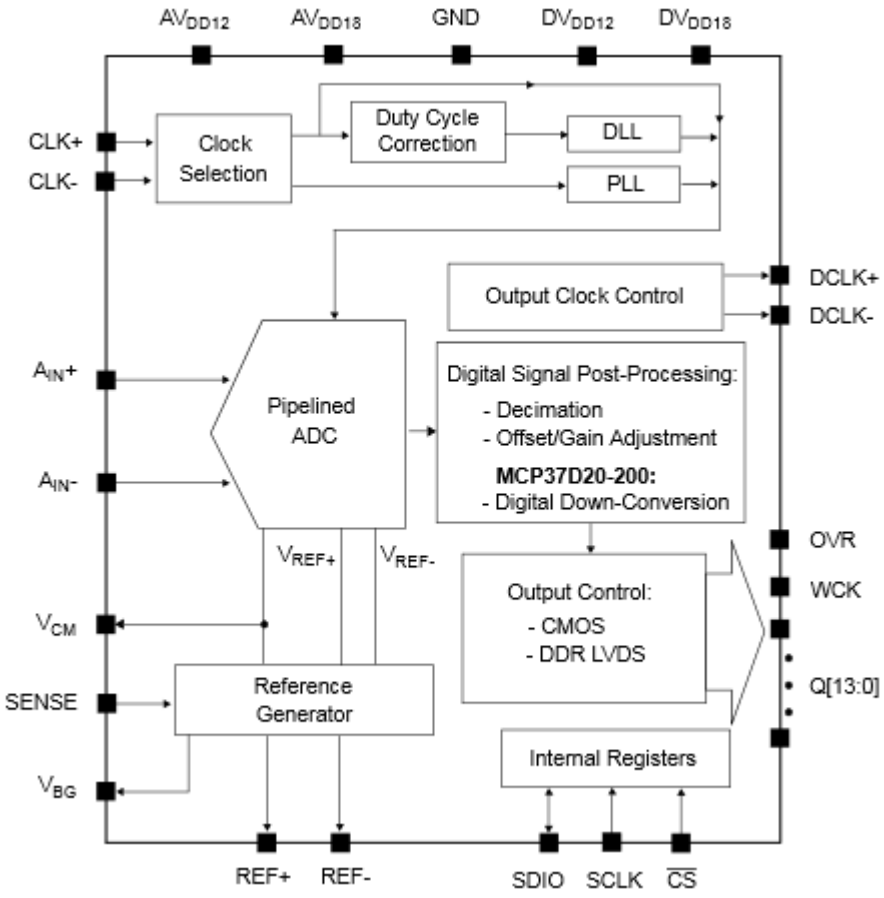

<< BACK

MCP37210-200

Online Datasheet

Features:

- 12-bit resolution
- 200 Msps sampling rate
- Low power 338 mW operation at full –
  - sampling rate, including LVDS digital I/O:
    - 80 mW Standby, 33 mW Shutdown
- 67 dBFS SNR at 200 Msps
- 96 dBFS SFDR at 200 Msps
- Decimation filters for improved SNR
- Phase, offset and gain adjustments
- Input channel bandwidth of 650 MHz
- Output data format in serial DDR LVDS or –
  - parallel CMOS
- Configuration via SPI
- Industrial temperature range: -40°C to +85°C
- Packaging:
  - VTLA-124 (9 mm x 9 mm x 0.9 mm)
  - TFBGA-121 (8 mm x 8 mm)

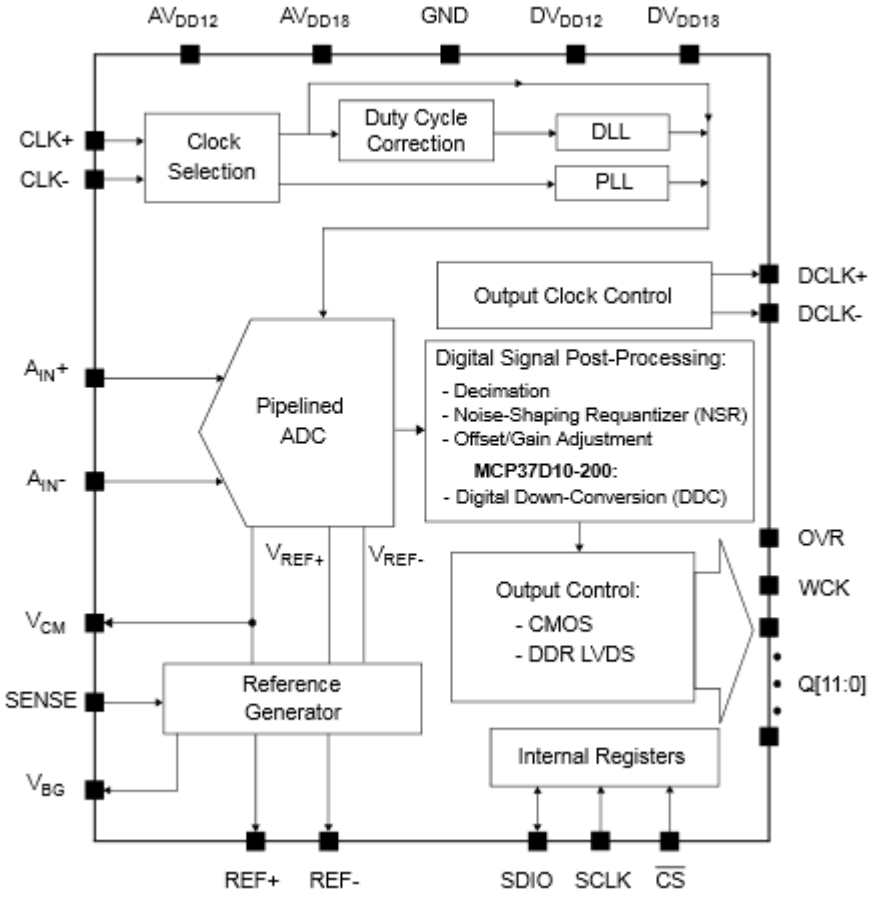

<< BACK

MCP37D20-200

Online Datasheet

Features:

- 14-bit resolution
- 200 Msps sampling rate
- Low power 348 mW operation at full –
  - sampling rate, including LVDS digital I/O:
    - 80 mW Standby, 33 mW Shutdown
- 67.8 dBFS SNR at 200 Msps
- 96 dBFS SFDR at 200 Msps
- Integrated digital down-converter
- Decimation filters for improved SNR
- Phase, offset and gain adjustments
- Input channel bandwidth of 650 MHz
- Output data format in serial DDR LVDS or –
  - parallel CMOS
- Configuration via SPI
- Industrial temperature range: -40°C to +85°C
- Packaging:
  - VTLA-124 (9 mm x 9 mm x 0.9 mm)
  - TFBGA-121 (8 mm x 8 mm)

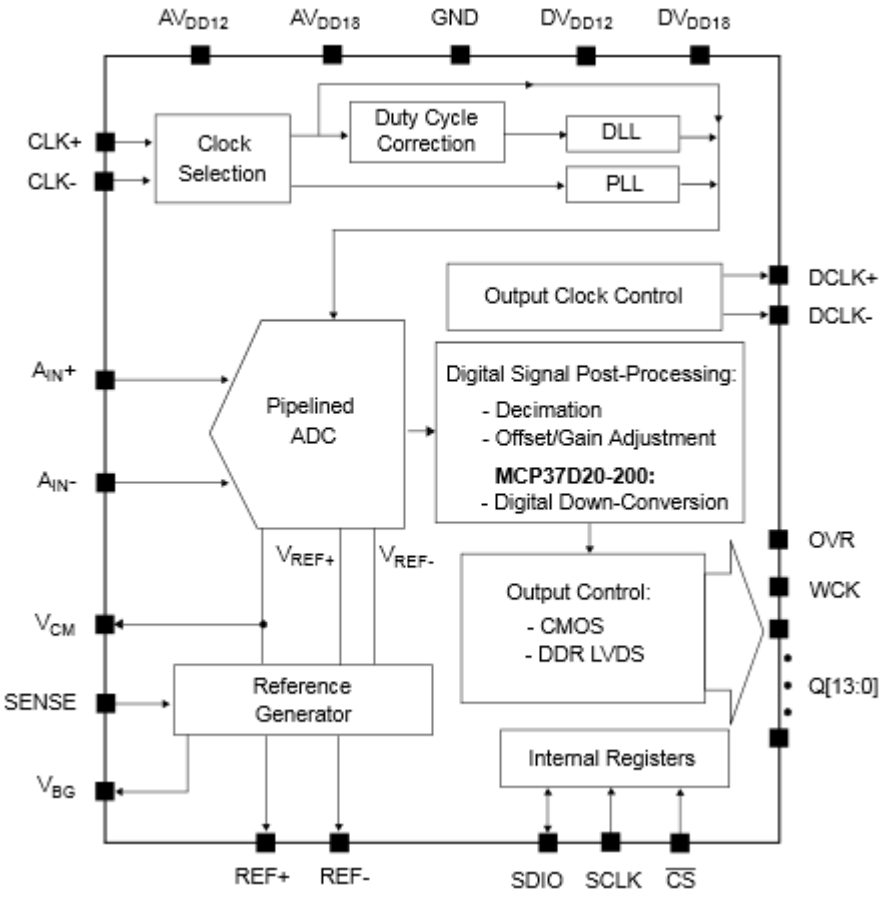

<< BACK

MCP37D10-200

Online Datasheet

Features:

- 12-bit resolution
- 200 Msps sampling rate
- Low power 338 mW operation at full –
  - sampling rate, including LVDS digital I/O:
    - 80 mW Standby, 33 mW Shutdown
- 67 dBFS SNR at 200 Msps
- 96 dBFS SFDR at 200 Msps
- Integrated digital down-converter
- Decimation filters for improved SNR
- Phase, offset and gain adjustments
- Input channel bandwidth of 650 MHz
- Output data format in serial DDR LVDS or -
  - parallel CMOS
- Configuration via SPI
- Industrial temperature range: -40°C to +85°C
- Packaging:
  - VTLA-124 (9 mm x 9 mm x 0.9 mm)
  - TFBGA-121 (8 mm x 8 mm)

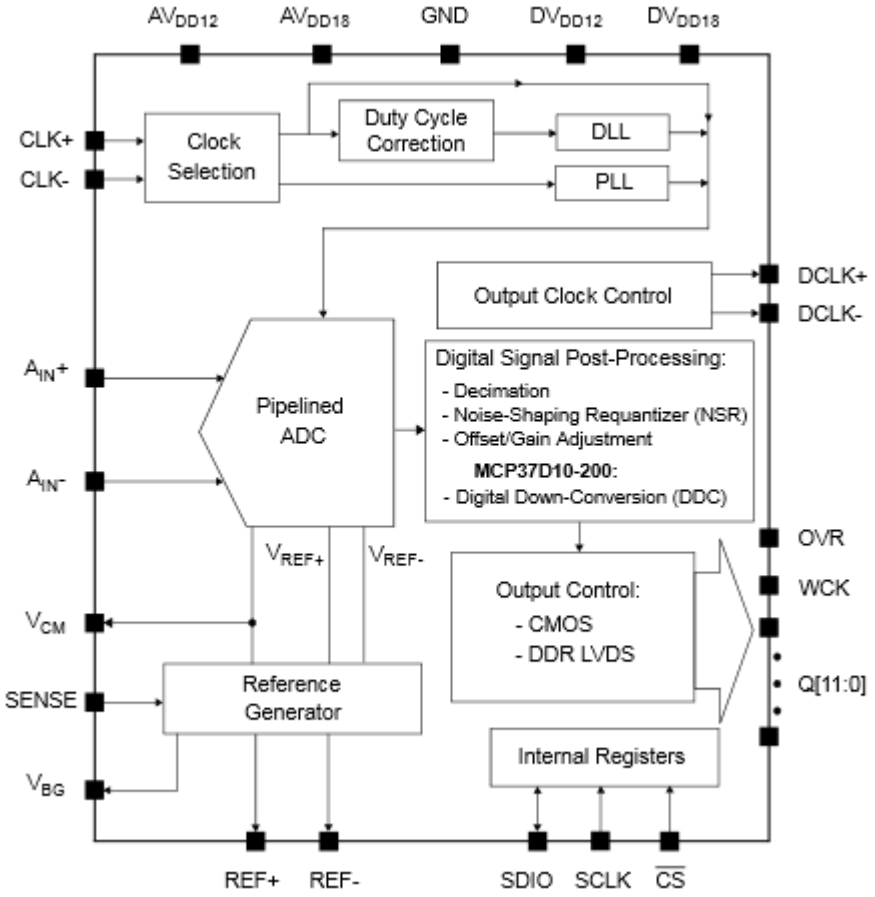

<< BACK

LP0701

Online Datasheet

Features:

- BV_{DSS}: -16.5V min
- $R_{DS(ON)}$: 1.5Ω max
- Ultra-low threshold
- High input impedance
- Low input capacitance
- Fast switching speeds
- Low on-resistance
- Freedom from secondary breakdown
- Low input and output leakage
- Operating Temperature Range:
  - -55°C to +150°C
- Package Option: TO-92, SOIC-8

Switching Waveform

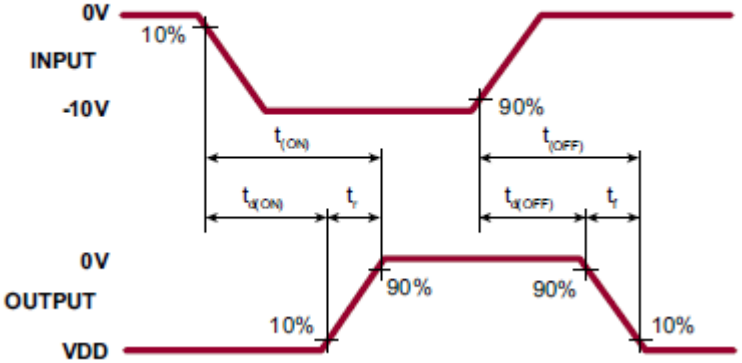

Test Circuit

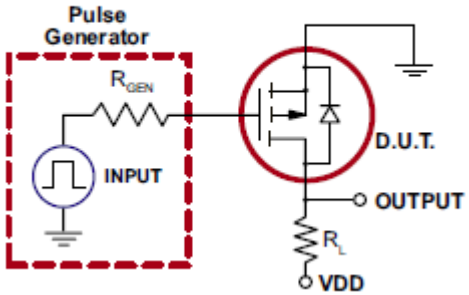

<< BACK

TP0604

Online Datasheet

Features:

- BV_{DSS}: -40V min
- $R_{DS(ON)}$: 2.0Ω max
- Low threshold: -2.4V max
- High input impedance
- Low input capacitance: 95pF typ
- Fast switching speeds
- Low on-resistance
- Free from secondary breakdown
- Low input and output leakage
- Operating Temperature Range:
  - -55°C to +150°C
- Package Option: TO-92

Switching Waveform

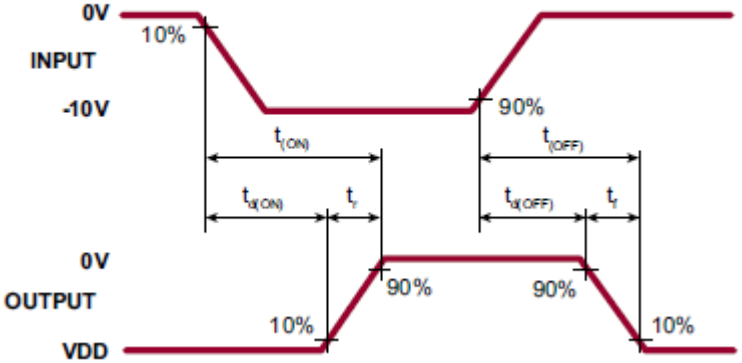

Test Circuit

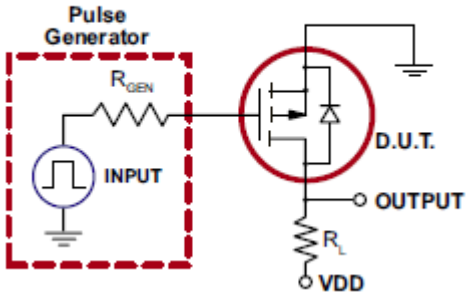

<< BACK

TP0610

Online Datasheet

Features:

- BV_{DSS}: -60V min
- $R_{DS(ON)}$: 10Ω max
- High input impedance and high gain
- Low power drive requirement
- Ease of paralleling
- Low C_{ISS} and fast switching speeds
- Excellent thermal stability
- Integral source-drain diode
- Free from secondary breakdown
- Operating Temperature Range:
  - -55°C to +150°C
- Package Option: SOT-23

Switching Waveform

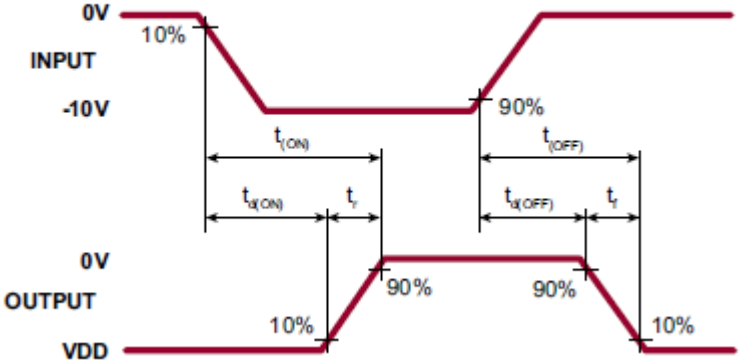

Test Circuit

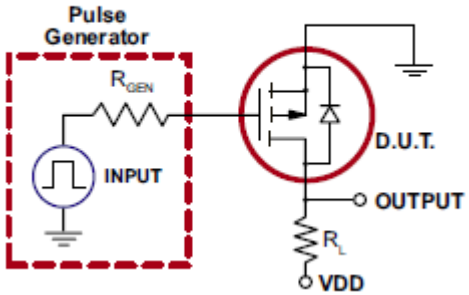

<< BACK

TP0620

Online Datasheet

Features:

- BV_{DSS}: -200V min
- $R_{DS(ON)}$: 12Ω max
- Low threshold: -2.4V max
- High input impedance
- Low input capacitance: 85pF typ
- Fast switching speeds
- Low on-resistance
- Free from secondary breakdown
- Low input and output leakage
- Operating Temperature Range:
  - -55°C to +150°C
- Package Option: TO-92

Switching Waveform

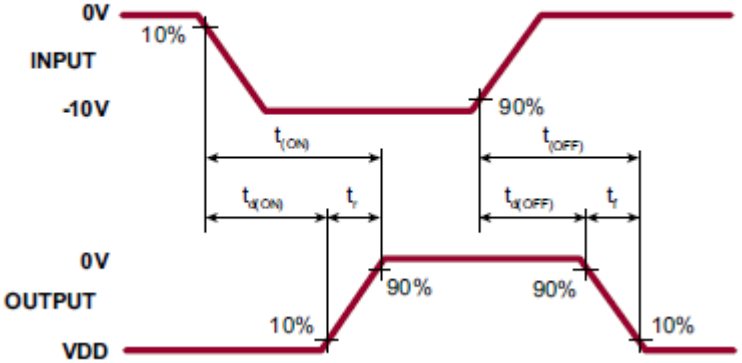

Test Circuit

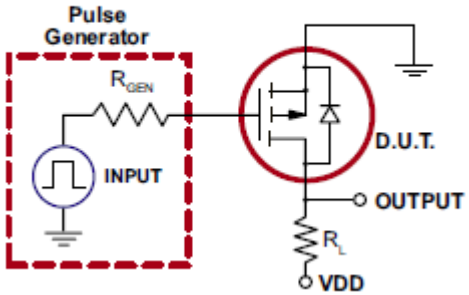

<< BACK

TP2104

Online Datasheet

Features:

- BV_{DSS}: -40V min
- $R_{DS(ON)}$: 6.0Ω max
- High input impedance and high gain
- Low power drive requirement
- Ease of paralleling
- Low C_{ISS} and fast switching speeds
- Excellent thermal stability
- Integral source-drain diode
- Free from secondary breakdown
- Operating Temperature Range:
  - -55°C to +150°C
- Package Option: TO-92, SOT-23

Switching Waveform

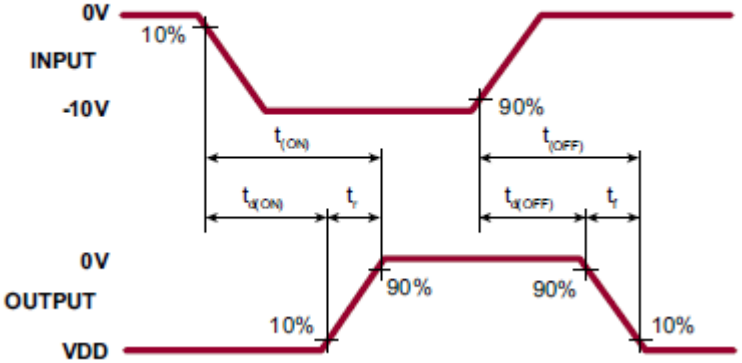

Test Circuit

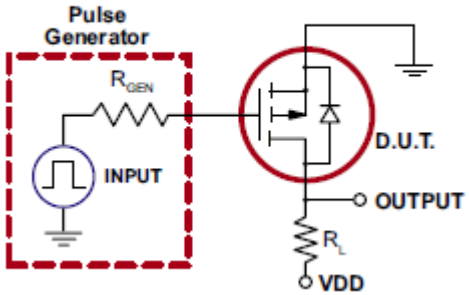

<< BACK

TP2424

Online Datasheet

Features:

- BV_{DSS}: -240V min
- $R_{DS(ON)}$: 8.0Ω max
- Low threshold
- High input impedance
- Low input capacitance
- Fast switching speeds
- Free from secondary breakdown
- Low input and output leakage
- Operating Temperature Range:
  - -55°C to +150°C
- Package Option: SOT-89

Switching Waveform

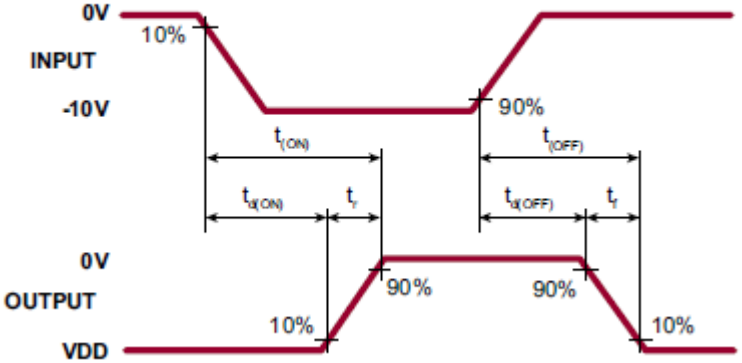

Test Circuit

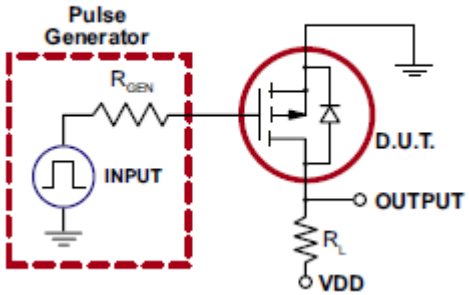

<< BACK

TP2435

Online Datasheet

Features:

- BV_{DSS}: -350V min
- $R_{DS(ON)}$: 15Ω max
- Low threshold
- High input impedance
- Low input capacitance
- Fast switching speeds
- Free from secondary breakdown
- Low input and output leakage
- Operating Temperature Range:
  - -55°C to +150°C
- Package Option: SOT-89

Switching Waveform

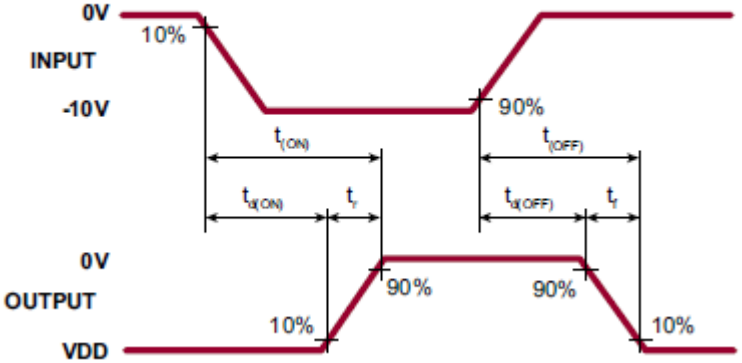

Test Circuit

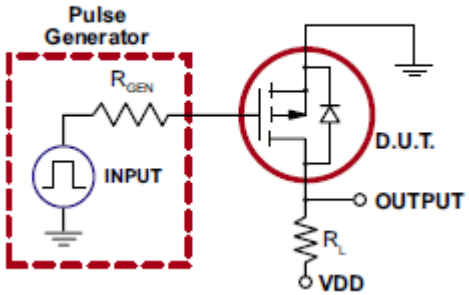

<< BACK

TP2502

Online Datasheet

Features:

- BV_{DSS}: -20V min
- $R_{DS(ON)}$: 2.0Ω max
- Low threshold: -2.4V max
- High input impedance
- Low input capacitance: 125pF max
- Fast switching speeds
- Free from secondary breakdown
- Low input and output leakage
- Operating Temperature Range:
  - -55°C to +150°C
- Package Option: SOT-89

Switching Waveform

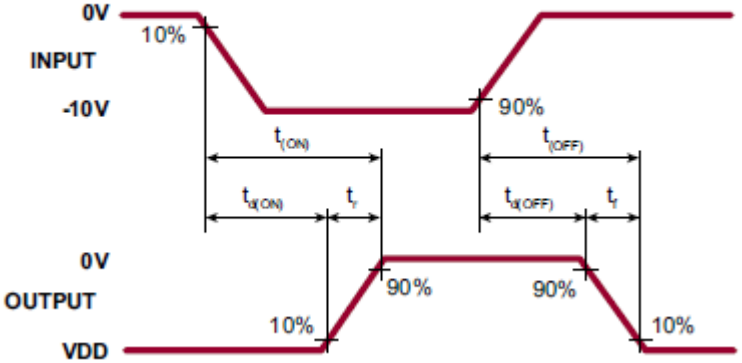

Test Circuit

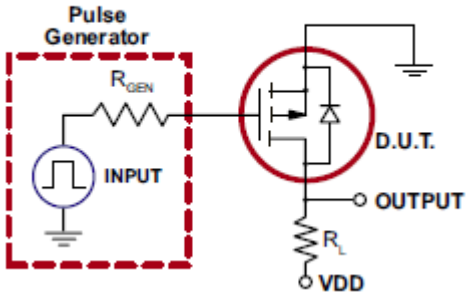

<< BACK

TP2510

Online Datasheet

Features:

- BV_{DSS}: -100V min
- $R_{DS(ON)}$: 3.5Ω max
- Low threshold: -2.4V max
- High input impedance
- Low input capacitance: 125pF max
- Fast switching speeds
- Free from secondary breakdown
- Low input and output leakage
- Operating Temperature Range:
  - -55°C to +150°C
- Package Option: SOT-89

Switching Waveform

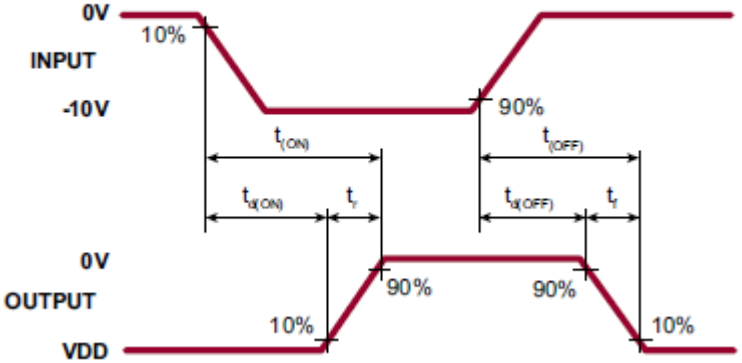

Test Circuit

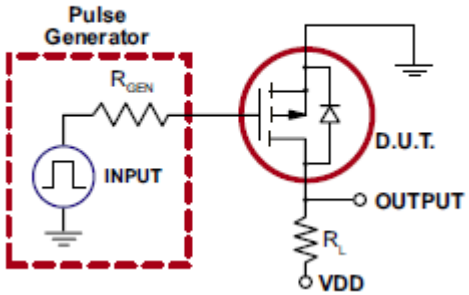

<< BACK

TP2520

Online Datasheet

Features:

- BV_{DSS}: -200V min
- $R_{DS(ON)}$: 12Ω max
- Low threshold: -2.4V max
- High input impedance
- Low input capacitance: 125pF max
- Fast switching speeds
- Free from secondary breakdown
- Low input and output leakage
- Operating Temperature Range:
  - -55°C to +150°C
- Package Option: SOT-89

Switching Waveform

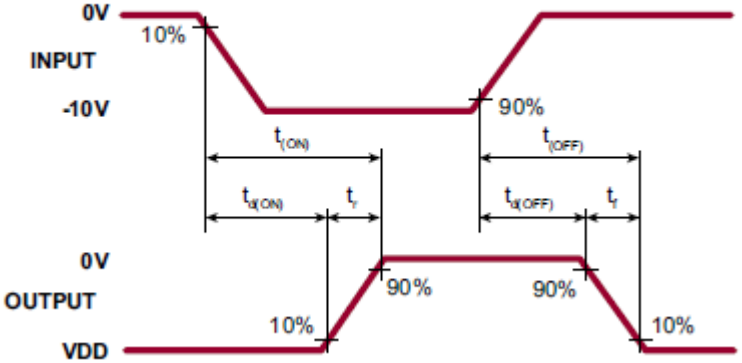

Test Circuit

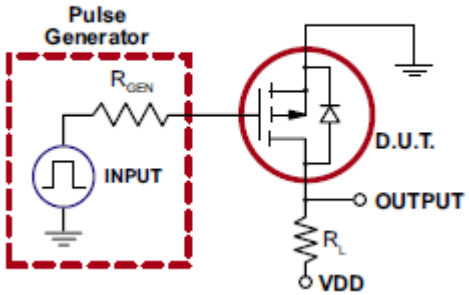

<< BACK

TP2522

Online Datasheet

Features:

- BV_{DSS}: -220V min
- $R_{DS(ON)}$: 12Ω max
- Low threshold: -2.4V max
- High input impedance
- Low input capacitance: 125pF max
- Fast switching speeds
- Free from secondary breakdown
- Low input and output leakage
- Operating Temperature Range:
  - -55°C to +150°C
- Package Option: SOT-89

Switching Waveform

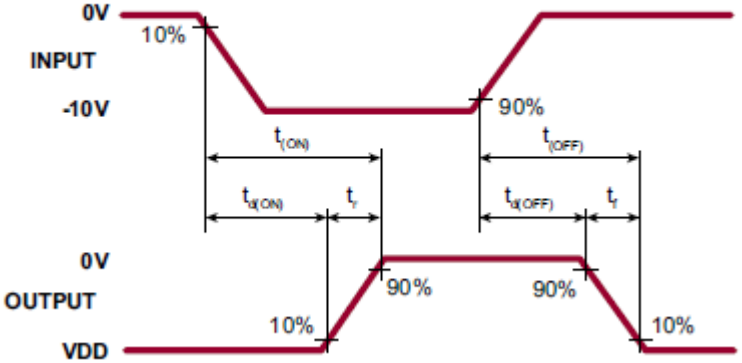

Test Circuit

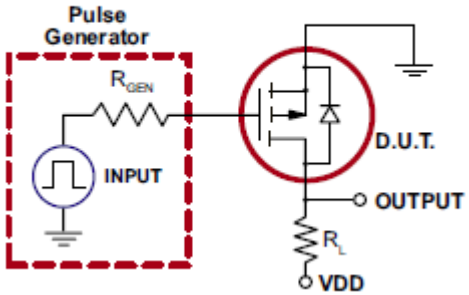

<< BACK

TP2535

Online Datasheet

Features:

- BV_{DSS}: -350V min
- $R_{DS(ON)}$: 25Ω max
- Low threshold: -2.4V max
- High input impedance
- Low input capacitance: 60pF typ
- Fast switching speeds
- Free from secondary breakdown
- Low input and output leakage
- Operating Temperature Range:
  - -55°C to +150°C
- Package Option: TO-92

Switching Waveform

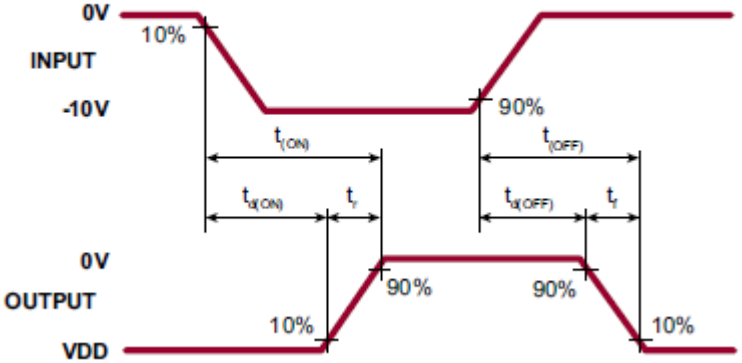

Test Circuit

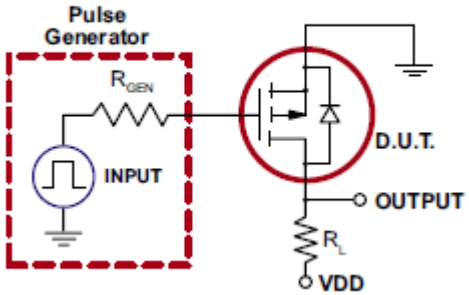

<< BACK

TP2540

Online Datasheet

Features:

- BV_{DSS}: -400V min
- $R_{DS(ON)}$: 25Ω max
- Low threshold: -2.4V max
- High input impedance
- Low input capacitance: 60pF typ
- Fast switching speeds
- Free from secondary breakdown
- Low input and output leakage
- Operating Temperature Range:
  - -55°C to +150°C
- Package Option: TO-92, TO-92, SOT89

Switching Waveform

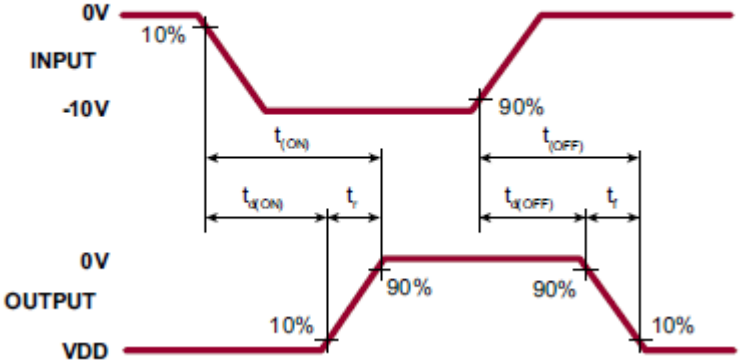

Test Circuit

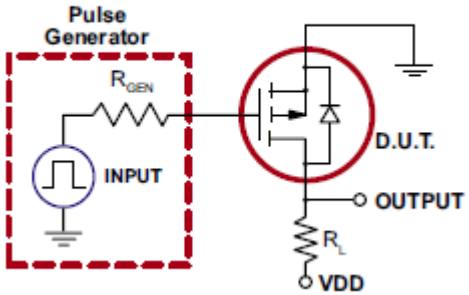

<< BACK

TP2635

Online Datasheet

Features:

- BV_{DSS}: -350V min
- $R_{DS(ON)}$: 15Ω max
- Low threshold: -2.0V max
- High input impedance
- Low input capacitance
- Fast switching speeds
- Low on-resistance
- Free from secondary breakdown
- Low input and output leakage
- Operating Temperature Range:
  - -55°C to +150°C
- Package Option: TO-92

Switching Waveform

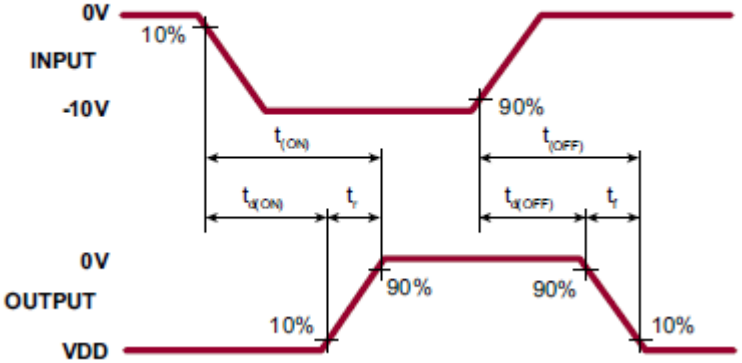

Test Circuit

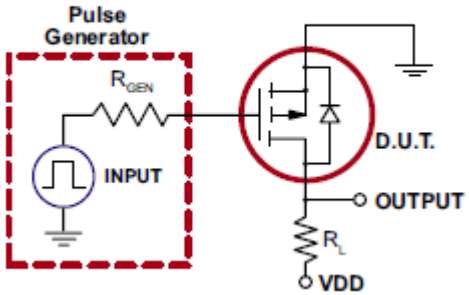

<< BACK

TP2640

Online Datasheet

Features:

- BV_{DSS}: -400V min
- $R_{DS(ON)}$: 15Ω max
- Low threshold: -2.0V max
- High input impedance
- Low input capacitance
- Fast switching speeds
- Low on-resistance
- Free from secondary breakdown
- Low input and output leakage
- Operating Temperature Range:
  - -55°C to +150°C
- Package Option: TO-92

Switching Waveform

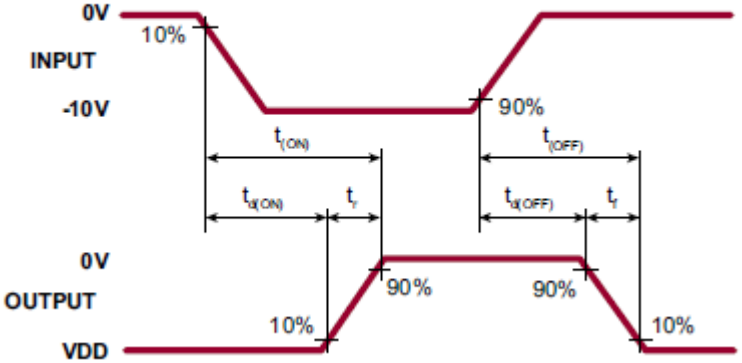

Test Circuit

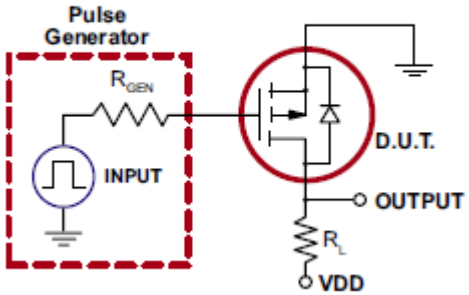

<< BACK

TP5322

Online Datasheet

Features:

- BV_{DSS}: -220V min
- $R_{DS(ON)}$: 12Ω max
- Low threshold: -2.4V max
- High input impedance
- Low input capacitance: 110pf max
- Fast switching speeds
- Low on-resistance
- Free from secondary breakdown
- Low input and output leakage
- Operating Temperature Range:
  - -55°C to +150°C
- Package Option: TO-92, SOT-23

Switching Waveform

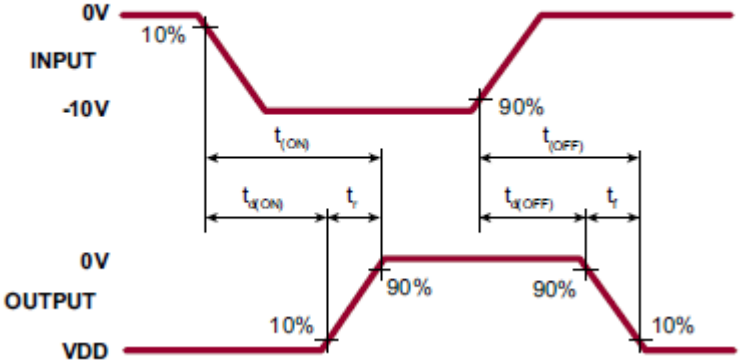

Test Circuit

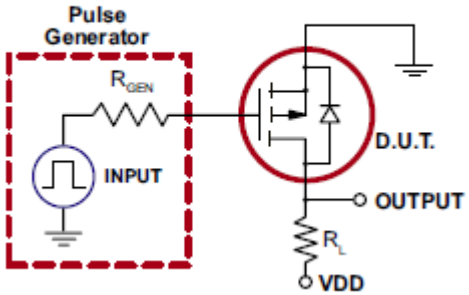

<< BACK

TP5335

Online Datasheet

Features:

- BV_{DSS}: -350V min
- $R_{DS(ON)}$: 30Ω max
- High input impedance and high gain
- Low power drive requirement
- Ease of paralleling
- Low C_{ISS} and fast switching speeds
- Excellent thermal stability
- Integral source-drain diode
- Free from secondary breakdown
- Operating Temperature Range:
  - -55°C to +150°C
- Package Option: SOT-23

Switching Waveform

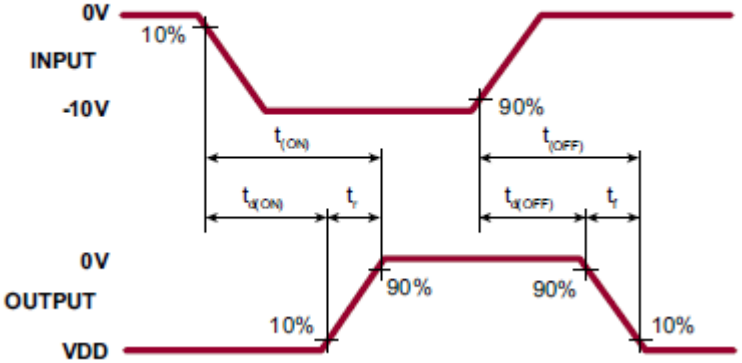

Test Circuit

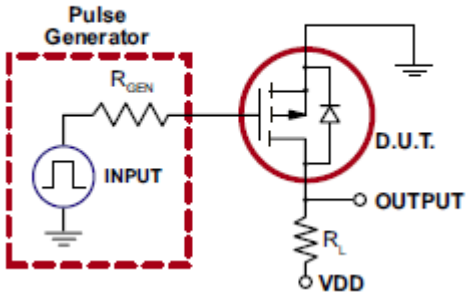

<< BACK

VP0104

Online Datasheet

Features:

- BV_{DSS}: -40V min
- $R_{DS(ON)}$: 8.0Ω max
- Free from secondary breakdown
- Low power drive requirement
- Ease of paralleling
- Low C_{ISS} and fast switching speeds
- Excellent thermal stability
- Integral source-drain diode
- High input impedance and high gain
- Operating Temperature Range:
  - -55°C to +150°C
- Package Option: TO-92

Switching Waveform

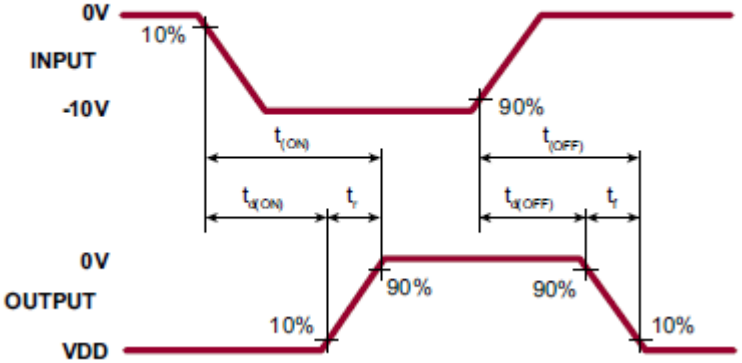

Test Circuit

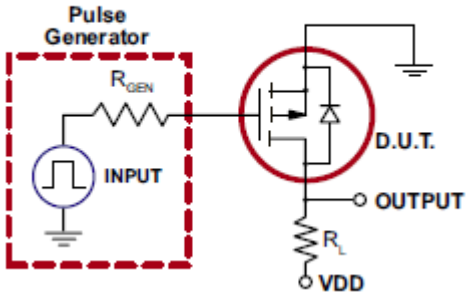

<< BACK

VP0106

Online Datasheet

Features:

- BV_{DSS}: -60V min
- $R_{DS(ON)}$: 8.0Ω max
- Free from secondary breakdown
- Low power drive requirement
- Ease of paralleling
- Low C_{ISS} and fast switching speeds
- Excellent thermal stability
- Integral source-drain diode
- High input impedance and high gain
- Operating Temperature Range:
  - -55°C to +150°C
- Package Option: TO-92

Switching Waveform

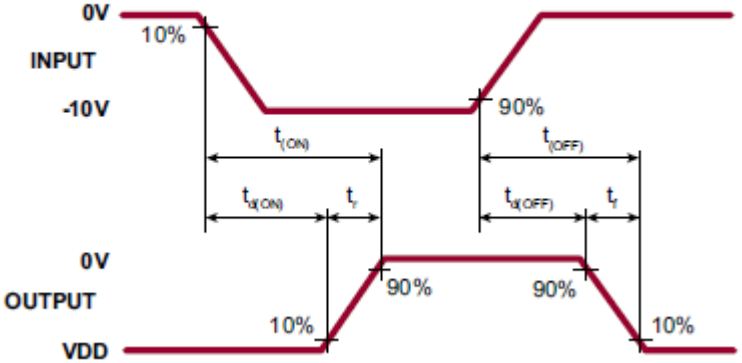

Test Circuit

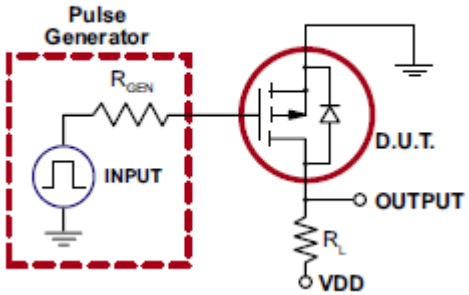

<< BACK

VP0109

Online Datasheet

Features:

- BV_{DSS}: -90V min
- $R_{DS(ON)}$: 8.0Ω max
- Free from secondary breakdown
- Low power drive requirement
- Ease of paralleling
- Low C_{ISS} and fast switching speeds
- Excellent thermal stability
- Integral source-drain diode
- High input impedance and high gain
- Operating Temperature Range:
  - -55°C to +150°C
- Package Option: TO-92

Switching Waveform

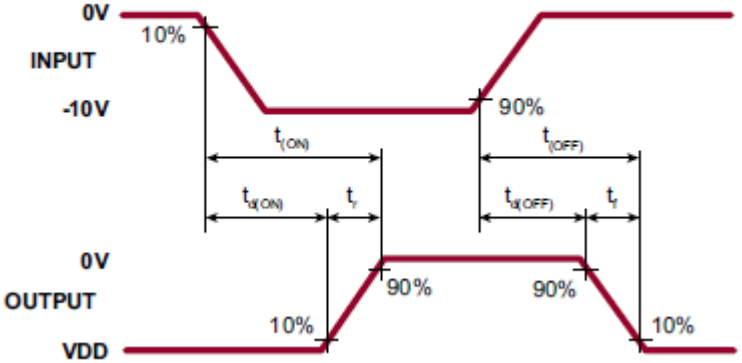

Test Circuit

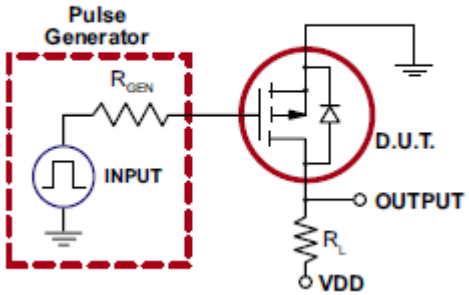

<< BACK

VP0550

Online Datasheet

Features:

- BV_{DSS}: -500V min
- $R_{DS(ON)}$: 125Ω max
- Free from secondary breakdown
- Low power drive requirement
- Ease of paralleling
- Low C_{ISS} and fast switching speeds
- Excellent thermal stability
- Integral source-drain diode
- High input impedance and high gain
- Operating Temperature Range:
  - -55°C to +150°C
- Package Option: TO-92

Switching Waveform

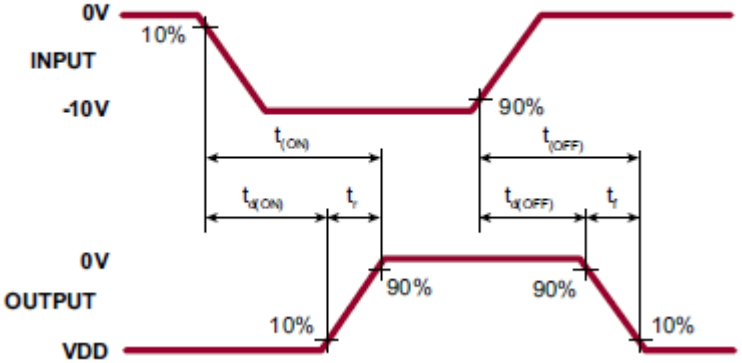

Test Circuit

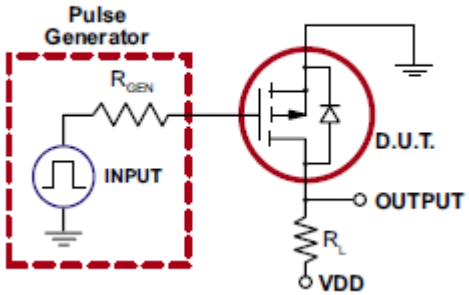

<< BACK

VP0808

Online Datasheet

Features:

- BV_{DSS}: -80V min
- $R_{DS(ON)}$: 5.0Ω max
- Free from secondary breakdown
- Low power drive requirement
- Ease of paralleling
- Low C_{ISS} and fast switching speeds
- Excellent thermal stability
- Integral source-drain diode
- High input impedance and high gain
- Operating Temperature Range:
  - -55°C to +150°C
- Package Option: TO-92

Switching Waveform

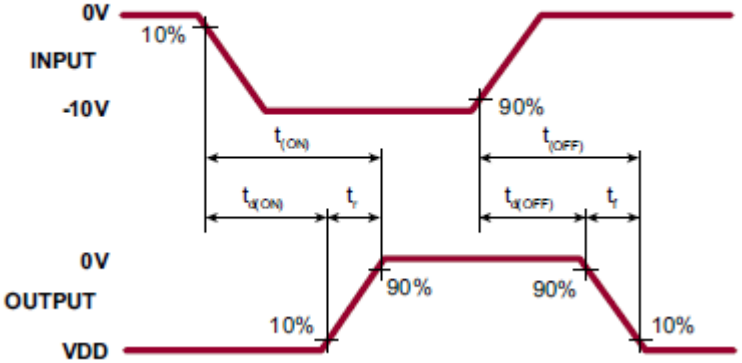

Test Circuit

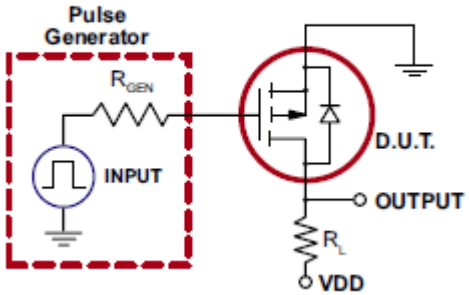

<< BACK

VP2106

Online Datasheet

Features:

- BV_{DSS}: -60V min
- $R_{DS(ON)}$: 12Ω max
- Free from secondary breakdown
- Low power drive requirement
- Ease of paralleling
- Low C_{ISS} and fast switching speeds
- Excellent thermal stability
- Integral source-drain diode
- High input impedance and high gain
- Operating Temperature Range:
  - -55°C to +150°C
- Package Option: TO-92

Switching Waveform

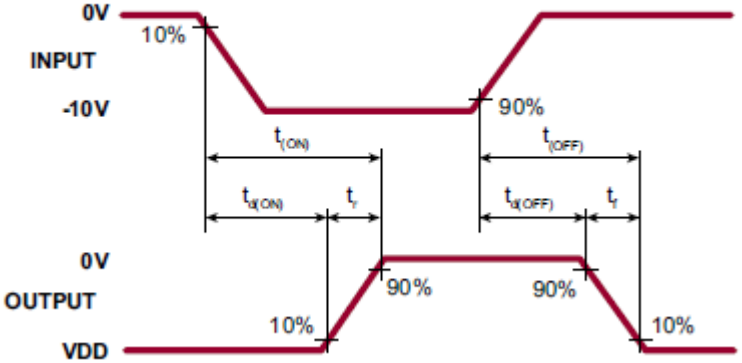

Test Circuit

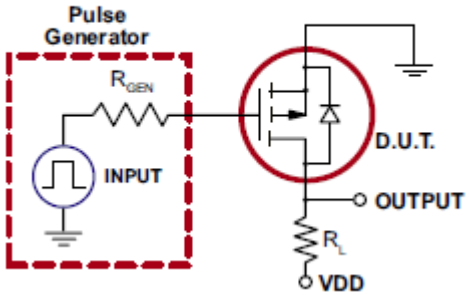

<< BACK

VP2110

Online Datasheet

Features:

- BV_{DSS}: -100V min
- $R_{DS(ON)}$: 12Ω max
- Free from secondary breakdown
- Low power drive requirement
- Ease of paralleling
- Low C_{ISS} and fast switching speeds
- Excellent thermal stability
- Integral source-drain diode
- High input impedance and high gain
- Operating Temperature Range:
  - -55°C to +150°C
- Package Option: SOT-23

Switching Waveform

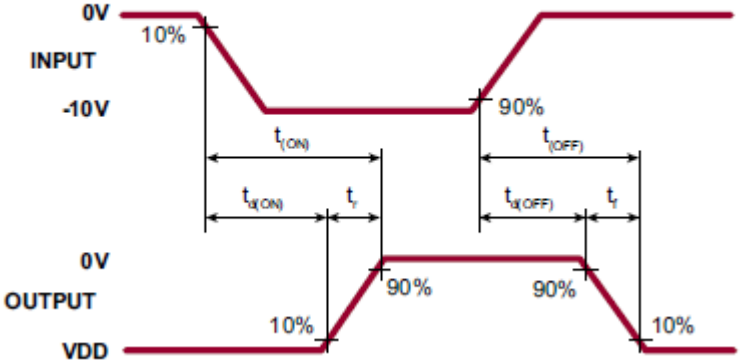

Test Circuit

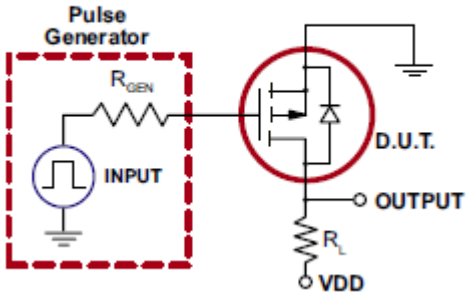

<< BACK

VP2206

Online Datasheet

Features:

- BV_{DSS}: -60V min
- $R_{DS(ON)}$: 0.9Ω max
- Free from secondary breakdown
- Low power drive requirement
- Ease of paralleling
- Low C_{ISS} and fast switching speeds
- Excellent thermal stability
- Integral source-to-drain diode
- High input impedance and high gain
- Operating Temperature Range:
  - -55°C to +150°C
- Package Option: TO-39, TO-92

Switching Waveform

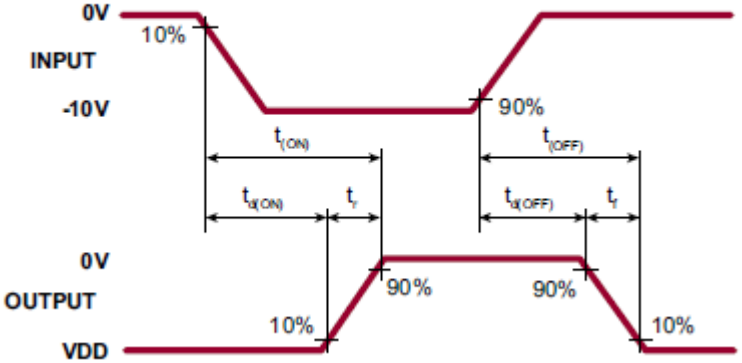

Test Circuit

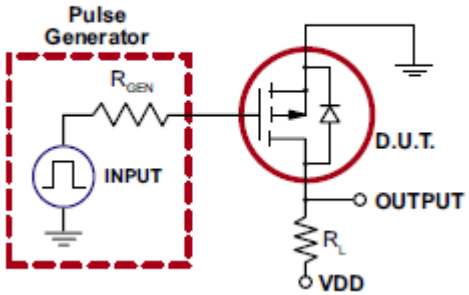

<< BACK

VP2450

Online Datasheet

Features:

- BV_{DSS}: -500V min
- $R_{DS(ON)}$: 30Ω max
- Free from secondary breakdown
- Low power drive requirement
- Ease of paralleling
- Low C_{ISS} and fast switching speeds
- Excellent thermal stability
- Integral source-to-drain diode
- High input impedance and high gain
- Operating Temperature Range:
  - -55°C to +150°C
- Package Option: TO-92, SOT-89

Switching Waveform

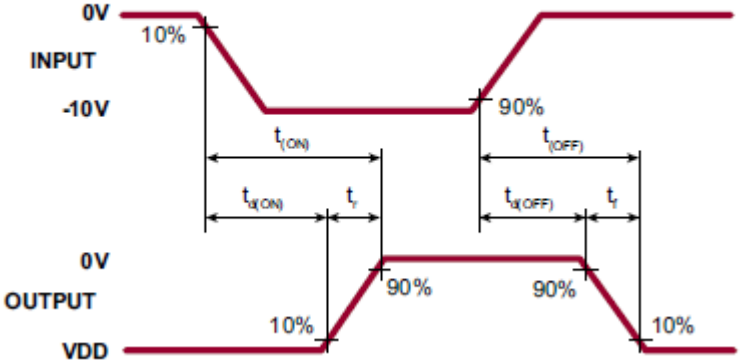

Test Circuit

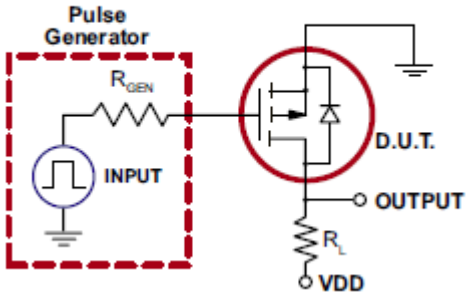

<< BACK

VP3203

Online Datasheet

Features:

- BV_{DSS}: -30V min
- $R_{DS(ON)}$: 0.6Ω max
- Free from secondary breakdown
- Low power drive requirement
- Ease of paralleling
- Low C_{ISS} and fast switching speeds
- Excellent thermal stability
- Integral source-to-drain diode
- High input impedance and high gain
- Operating Temperature Range:
  - -55°C to +150°C
- Package Option: TO-92, SOT-89

Switching Waveform

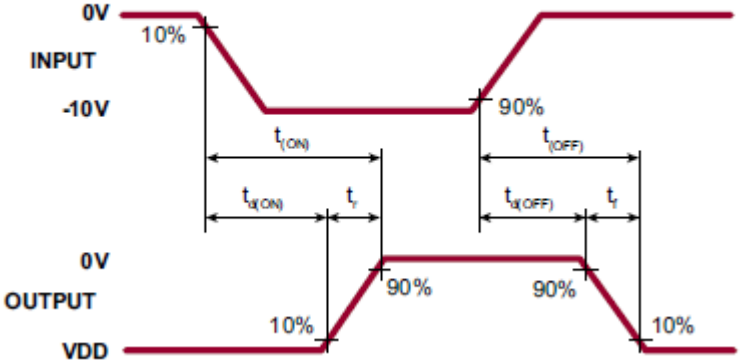

Test Circuit

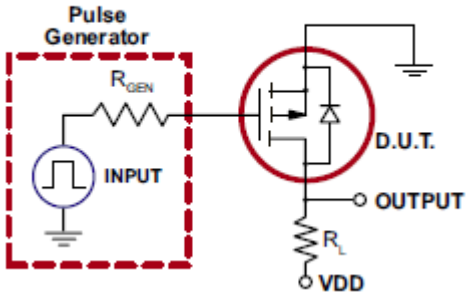

<< BACK

2N6660

Online Datasheet

Features:

- BV_{DSS}: 60V min
- $R_{DS(ON)}$: 3.0Ω max
- Free from secondary breakdown
- Low power drive requirement
- Ease of paralleling
- Low C_{ISS} and fast switching speeds
- Excellent thermal stability
- Integral source-drain diode
- High input impedance and high gain
- Operating Temperature Range:
  - -55°C to +150°C
- Package Option: TO-39 Metal Can

Switching Waveform

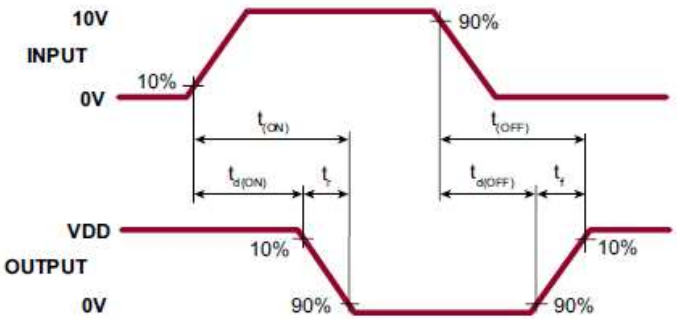

Test Circuit

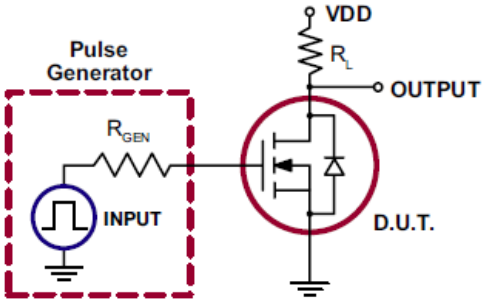

<< BACK

2N6661

Online Datasheet

Features:

- BV_{DSS}: 90V min
- $R_{DS(ON)}$: 4.0Ω max
- Free from secondary breakdown
- Low power drive requirement
- Ease of paralleling
- Low C_{ISS} and fast switching speeds
- Excellent thermal stability
- Integral source-drain diode
- High input impedance and high gain
- Operating Temperature Range:
  - -55°C to +150°C
- Package Option: TO-39 metal can

Switching Waveform

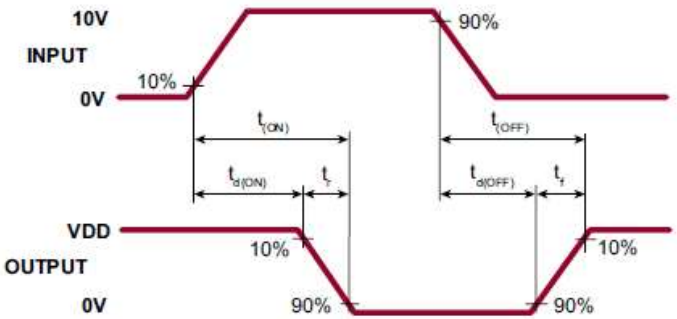

Test Circuit

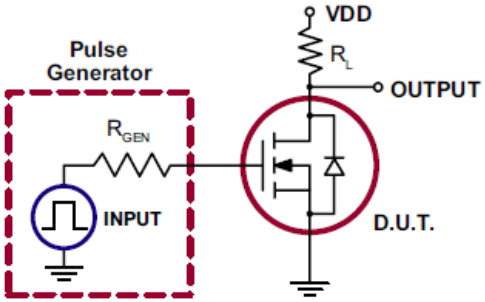

<< BACK

2N7000

Online Datasheet

Features:

- BV_{DSS}: 60V min
- $R_{DS(ON)}$: 5.0Ω max
- Free from secondary breakdown
- Low power drive requirement
- Ease of paralleling
- Low C_{ISS} and fast switching speeds
- Excellent thermal stability
- Integral source-drain diode
- High input impedance and high gain
- Operating Temperature Range:
  - -55°C to +150°C
- Package Option: TO-92

Switching Waveform

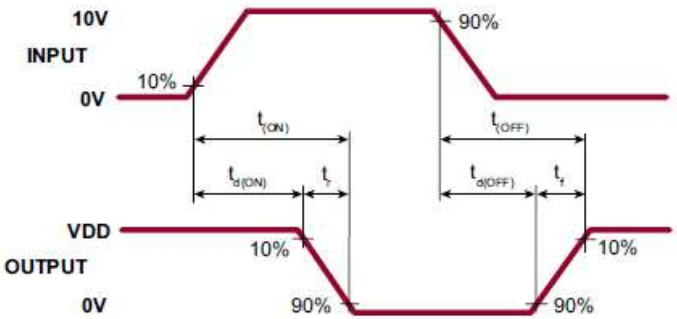

Test Circuit

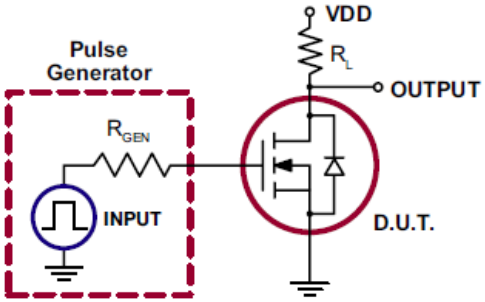

<< BACK

2N7002

Online Datasheet

Features:

- BV_{DSS}: 60V min
- $R_{DS(ON)}$: 7.5Ω max
- Free from secondary breakdown
- Low power drive requirement
- Ease of paralleling
- Low C_{ISS} and fast switching speeds
- Excellent thermal stability
- Integral source-drain diode
- High input impedance and high gain
- Operating Temperature Range:
  - -55°C to +150°C
- Package Option: SOT-23 (TO-236AB)

Switching Waveform

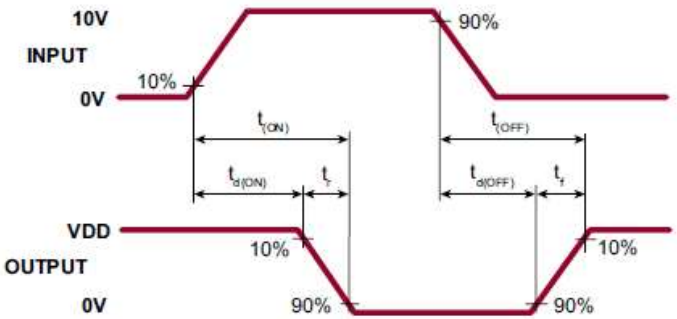

Test Circuit

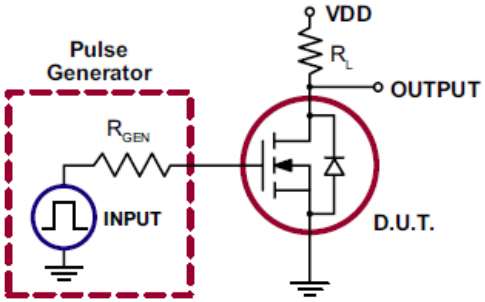

<< BACK

2N7008

Online Datasheet

Features:

- BV_{DSS}: 60V min
- $R_{DS(ON)}$: 7.5Ω max
- Free from secondary breakdown
- Low power drive requirement
- Ease of paralleling
- Low C_{ISS} and fast switching speeds
- Excellent thermal stability
- Integral source-drain diode
- High input impedance and high gain
- Operating Temperature Range:
  - -55°C to +150°C
- Package Option: TO-92

Switching Waveform

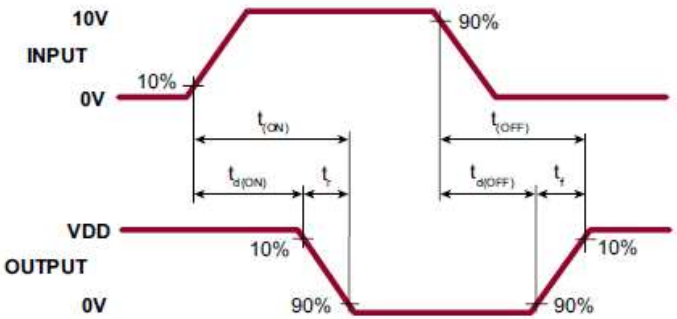

Test Circuit

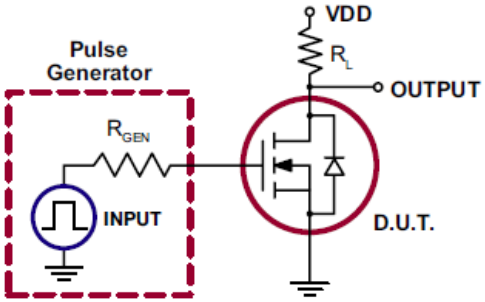

<< BACK

TN0104

Online Datasheet

Features:

- BV_{DSS}: 40V min
- $R_{DS(ON)}$: 1.8Ω max for TO-92 pkg
- $R_{DS(ON)}$: 2.0Ω max for SOT-89 pkg
- Low threshold: 1.6V max
- High input impedance
- Low input capacitance
- Fast switching speeds
- Low on-resistance
- Free from secondary breakdown
- Low input and output leakage
- Operating Temperature Range:
  - -55°C to +150°C
- Package Option: TO-92, SOT-89

Switching Waveform

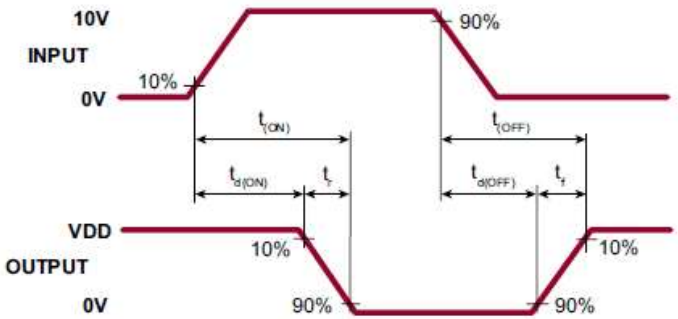

Test Circuit

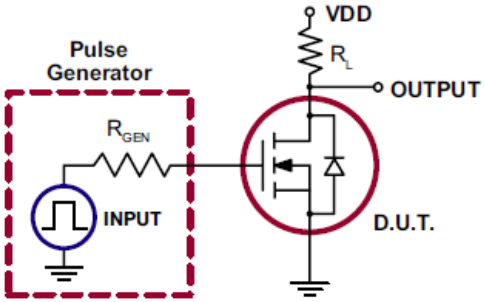

<< BACK

TN0106

Online Datasheet

Features:

- BV_{DSS}: 60V min
- $R_{DS(ON)}$: 3.0Ω max
- Low threshold: 2.0V max
- High input impedance
- Low input capacitance: 50pF typ
- Fast switching speeds
- Low on-resistance
- Free from secondary breakdown
- Low input and output leakage
- Operating Temperature Range:
  - -55°C to +150°C
- Package Option: TO-92

Switching Waveform

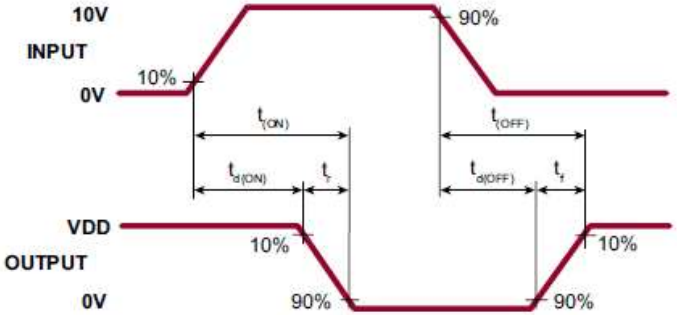

Test Circuit

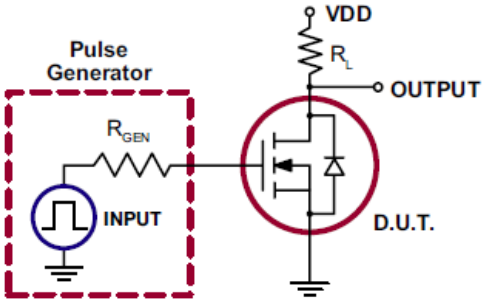

<< BACK

TN0110

Online Datasheet

Features:

- BV_{DSS}: 100V min
- $R_{DS(ON)}$: 3.0Ω max
- Low threshold: 2.0V max
- High input impedance
- Low input capacitance: 50pF typ
- Fast switching speeds
- Low on-resistance
- Free from secondary breakdown
- Low input and output leakage
- Operating Temperature Range:
  - -55°C to +150°C
- Package Option: TO-92

Switching Waveform

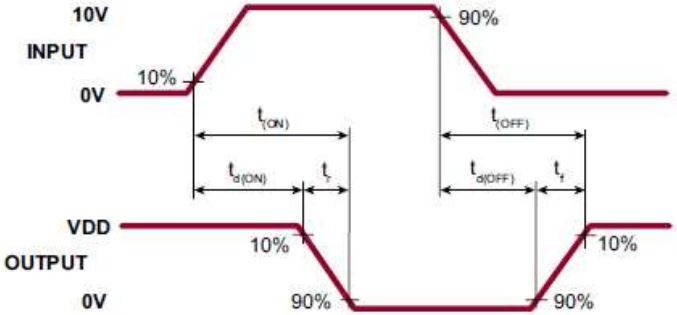

Test Circuit

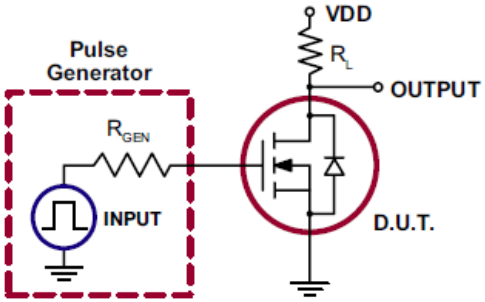

<< BACK

TN0604

Online Datasheet

Features:

- BV_{DSS}: 40V min
- $R_{DS(ON)}$: 0.75Ω max
- Low threshold: 1.6V max
- High input impedance
- Low input capacitance: 140pF typ
- Fast switching speeds
- Low on-resistance
- Free from secondary breakdown
- Low input and output leakage
- Operating Temperature Range: -55°C to +150°C
- Package Option: TO-92

Switching Waveform

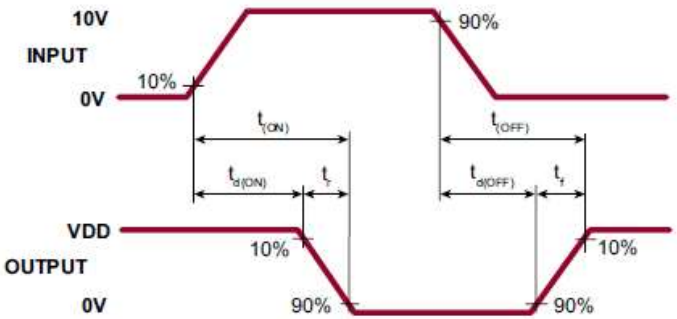

Test Circuit

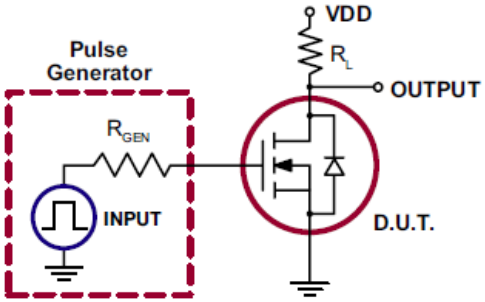

<< BACK

TN0606

Online Datasheet

Features:

- BV_{DSS}: 60V min
- $R_{DS(ON)}$: 1.5Ω max
- Low threshold: 2.0V max
- High input impedance
- Low input capacitance: 100pF typ
- Fast switching speeds
- Low on-resistance
- Free from secondary breakdown
- Low input and output leakage
- Operating Temperature Range: -55°C to +150°C
- Package Option: TO-92

Switching Waveform

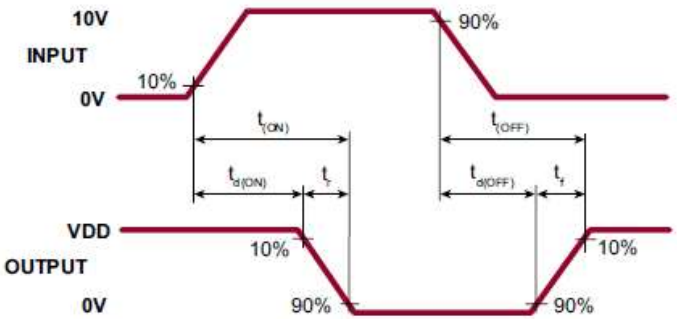

Test Circuit

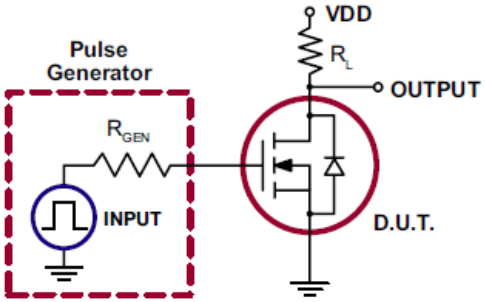

<< BACK

TN0606

Online Datasheet

Features:

- BV_{DSS}: 60V min
- $R_{DS(ON)}$: 1.5Ω max
- Low threshold: 2.0V max
- High input impedance
- Low input capacitance: 100pF typ
- Fast switching speeds
- Low on-resistance
- Free from secondary breakdown
- Low input and output leakage
- Operating Temperature Range: -55°C to +150°C
- Package Option: TO-92

Switching Waveform

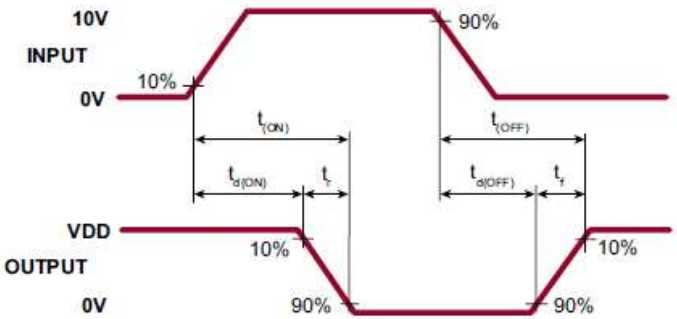

Test Circuit

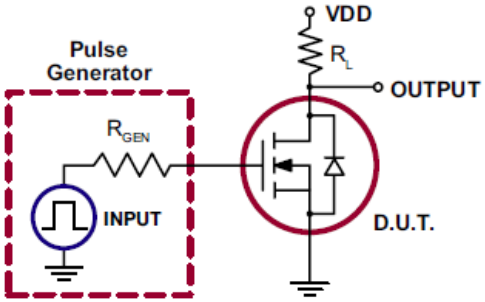

<< BACK

TN0610

Online Datasheet

Features:

- BV_{DSS}: 100V min
- $R_{DS(ON)}$: 1.5Ω max
- Low threshold: 2.0V max
- High input impedance
- Low input capacitance: 100pF typ
- Fast switching speeds
- Low on-resistance
- Free from secondary breakdown
- Low input and output leakage
- Operating Temperature Range: -55°C to +150°C
- Package Option: TO-92

Switching Waveform

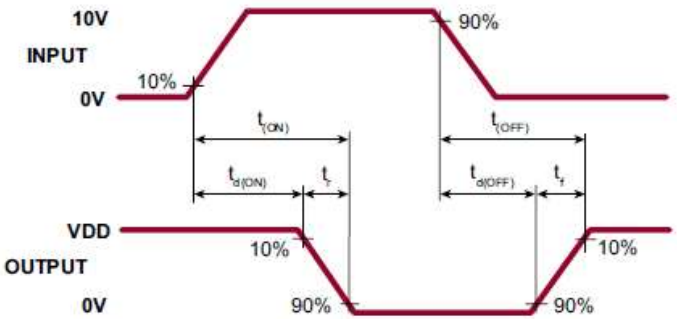

Test Circuit

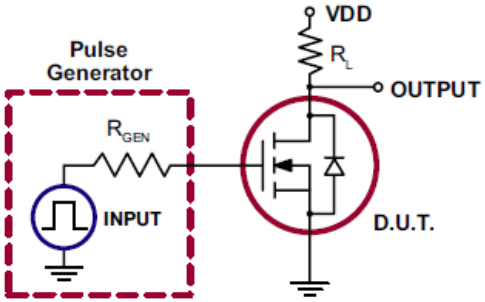

<< BACK

TN0620

Online Datasheet

Features:

- BV_{DSS}: 200V min
- $R_{DS(ON)}$: 6.0Ω max
- Low threshold: 1.6V max
- High input impedance
- Low input capacitance: 110pF typ
- Fast switching speeds
- Low on-resistance
- Free from secondary breakdown
- Low input and output leakage
- Operating Temperature Range: -55°C to +150°C
- Package Option: TO-92

Switching Waveform

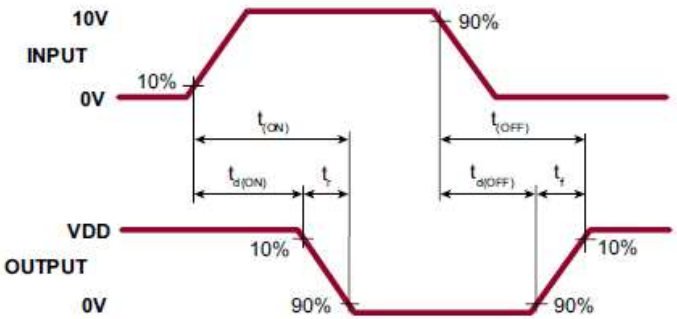

Test Circuit

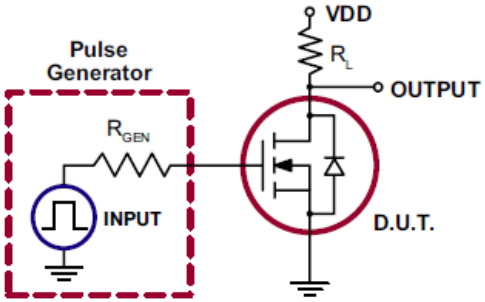

<< BACK

TN0702

Online Datasheet

Features:

- BV_{DSS}: 20V min
- $R_{DS(ON)}$: 1.3Ω max
- Low threshold: 1.6V max
- High input impedance
- Low input capacitance: 130pF typ
- Fast switching speeds
- Low on-resistance
- Free from secondary breakdown
- Low input and output leakage
- Operating Temperature Range: -55°C to +150°C
- Package Option: TO-92

Switching Waveform

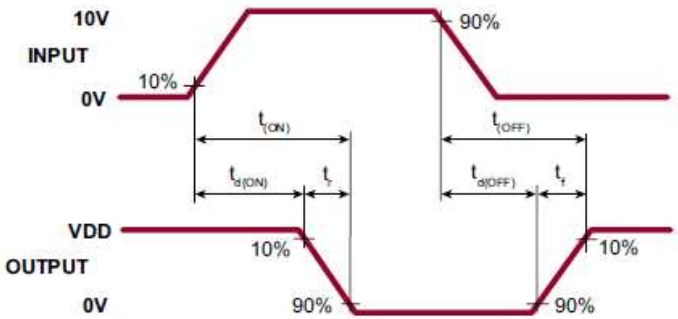

Test Circuit

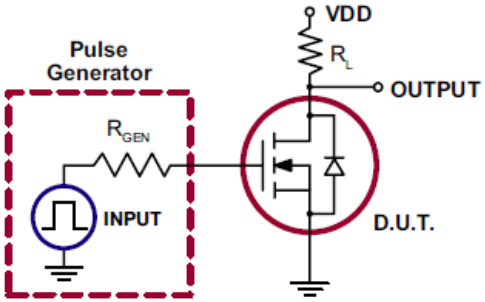

<< BACK

TN2106

Online Datasheet

Features:

- BV_{DSS}: 60V min
- $R_{DS(ON)}$: 2.5Ω max
- Free from secondary breakdown
- Low power drive requirement
- Ease of paralleling
- Low C_{ISS} and fast switching speeds
- Excellent thermal stability
- Integral source-drain diode
- High input impedance and high gain
- Operating Temperature Range: -55°C to +150°C
- Package Option: TO-92, SOT-23

Switching Waveform

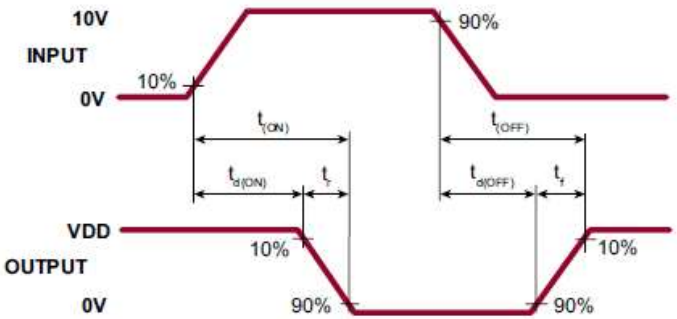

Test Circuit

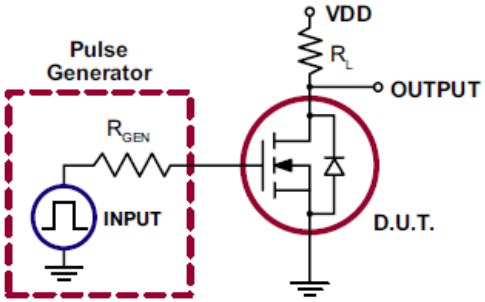

<< BACK

TN2124

Online Datasheet

Features:

- BV_{DSS}: 240V min
- $R_{DS(ON)}$: 15Ω max
- Free from secondary breakdown
- Low power drive requirement
- Ease of paralleling
- Low C_{ISS} and fast switching speeds
- Excellent thermal stability
- Integral source-drain diode
- High input impedance and high gain
- Operating Temperature Range: -55°C to +150°C
- Package Option: SOT-23

Switching Waveform

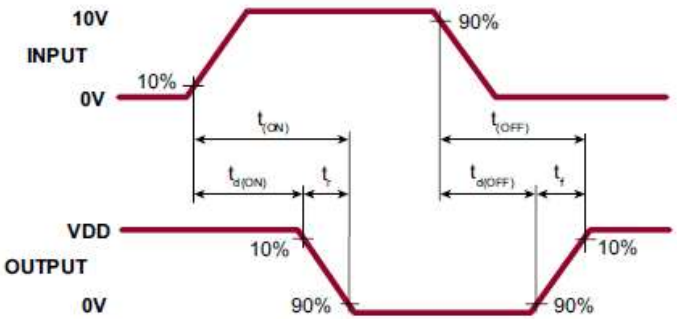

Test Circuit

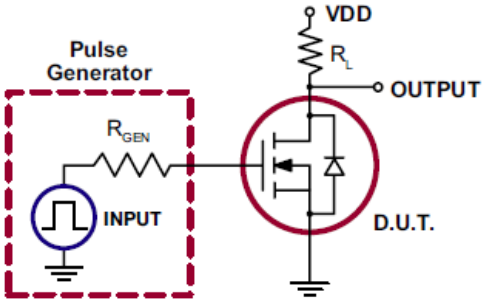

<< BACK

TN2130

Online Datasheet

Features:

- BV_{DSS}: 300V min
- $R_{DS(ON)}$: 25Ω max
- Free from secondary breakdown
- Low power drive requirement
- Ease of paralleling
- Low C_{ISS} and fast switching speeds
- Excellent thermal stability
- Integral source-drain diode
- High input impedance and high gain
- Operating Temperature Range: -55°C to +150°C
- Package Option: SOT-23

Switching Waveform

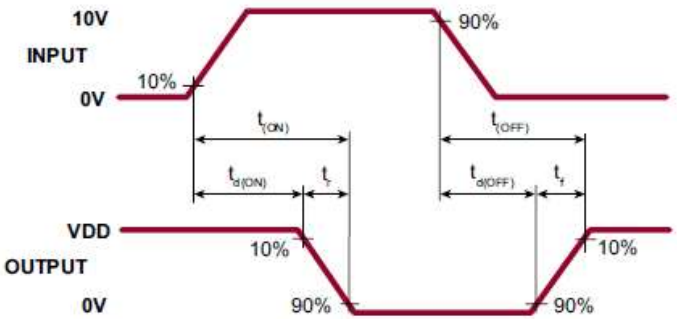

Test Circuit

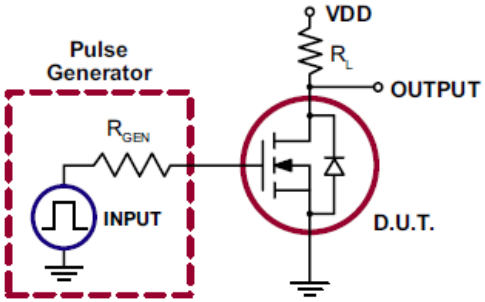

<< BACK

TN2425

Online Datasheet

Features:

- BV_{DSS}: 250V min
- $R_{DS(ON)}$: 3.5Ω max
- Low threshold
- High input impedance
- Low input capacitance
- Fast switching speeds
- Low on-resistance
- Free from secondary breakdown
- Low input and output leakage
- Operating Temperature Range: -55°C to +150°C
- Package Option: SOT-89

Switching Waveform

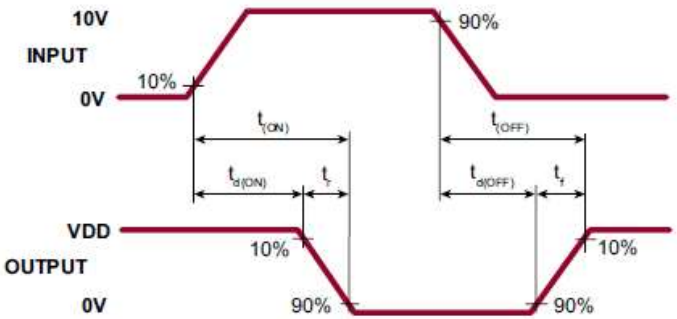

Test Circuit

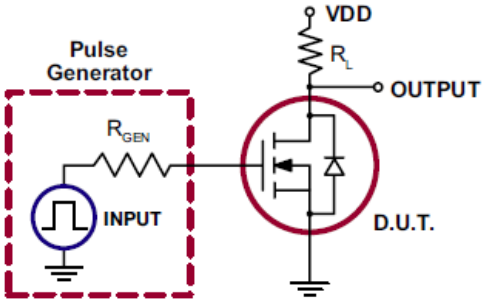

<< BACK

TN2435

Online Datasheet

Features:

- BV_{DSS}: 350V min
- $R_{DS(ON)}$: 6.0Ω max
- Low threshold
- High input impedance
- Low input capacitance
- Fast switching speeds
- Low on-resistance
- Free from secondary breakdown
- Low input and output leakage
- Operating Temperature Range: -55°C to +150°C
- Package Option: SOT-89

Switching Waveform

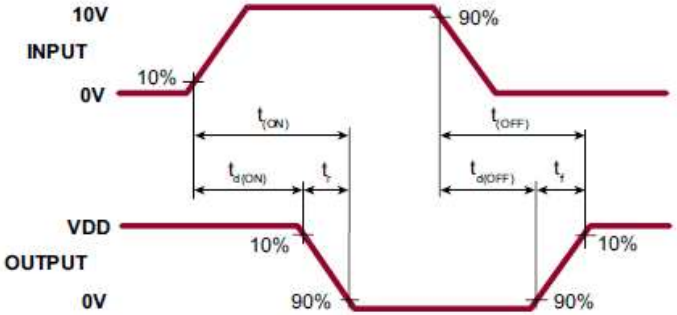

Test Circuit

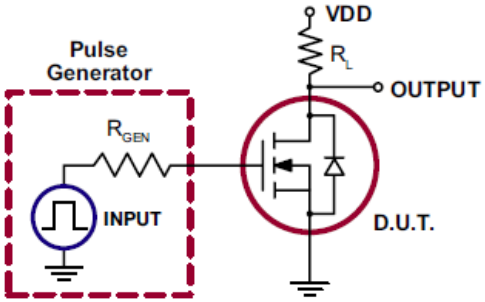

<< BACK

TN2501

Online Datasheet

Features:

- BV_{DSS}: 18V min
- $R_{DS(ON)}$: 2.5Ω max
- Low threshold
- High input impedance
- Low input capacitance
- Fast switching speeds
- Low on-resistance
- Free from secondary breakdown
- Low input and output leakage
- Operating Temperature Range: -55°C to +150°C
- Package Option: SOT-89

Switching Waveform

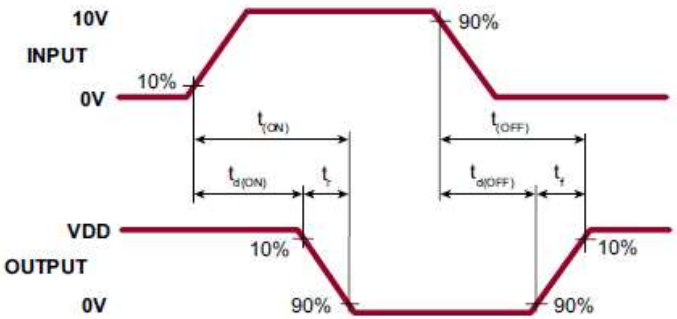

Test Circuit

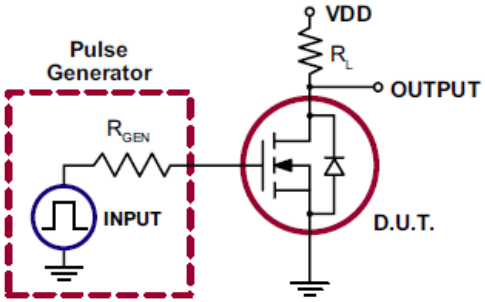

<< BACK

TN2504

Online Datasheet

Features:

- BV_{DSS}: 40V min
- $R_{DS(ON)}$: 1.0Ω max
- Low threshold: 1.6V max
- High input impedance
- Low input capacitance: 125pF max
- Fast switching speeds
- Low on-resistance
- Free from secondary breakdown
- Low input and output leakage
- Operating Temperature Range: -55°C to +150°C
- Package Option: SOT-89

Switching Waveform

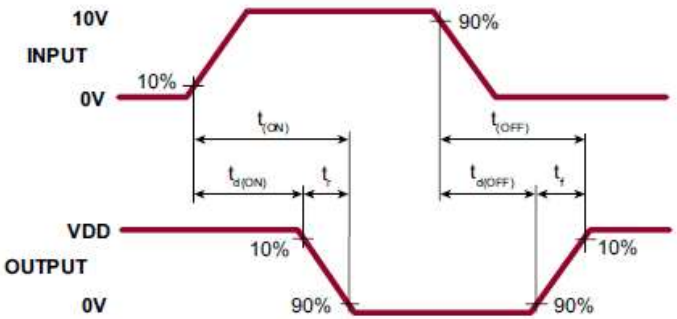

Test Circuit

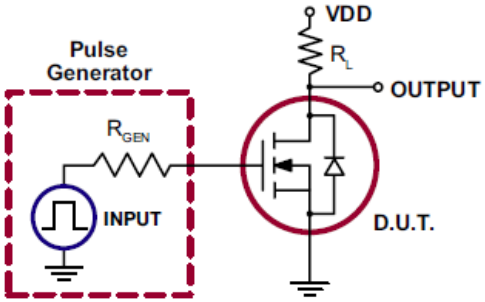

<< BACK

TN2510

Online Datasheet

Features:

- BV_{DSS}: 100V min
- $R_{DS(ON)}$: 1.5Ω max
- Low threshold: 2.0V max
- High input impedance
- Low input capacitance: 125pF max
- Fast switching speeds
- Low on-resistance
- Free from secondary breakdown
- Low input and output leakage
- Operating Temperature Range: -55°C to +150°C
- Package Option: SOT-89

Switching Waveform

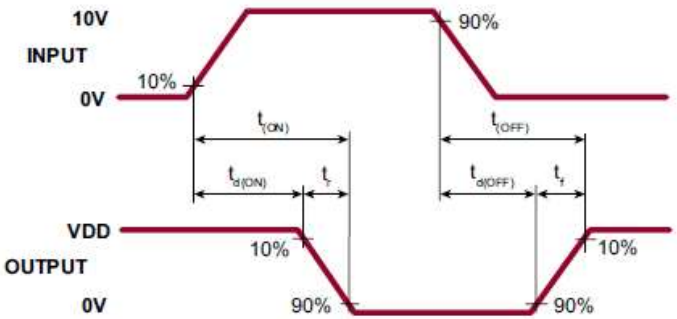

Test Circuit

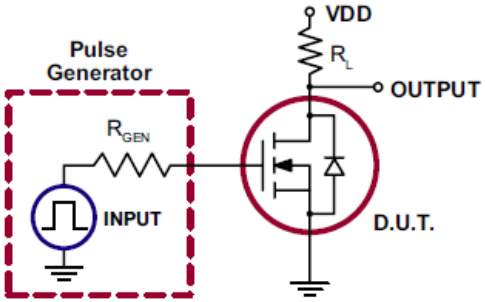

<< BACK

TN2524

Online Datasheet

Features:

- BV_{DSS}: 240V min
- $R_{DS(ON)}$: 6.0Ω max
- Low threshold: 2.0V max
- High input impedance
- Low input capacitance: 125pF max
- Fast switching speeds
- Low on-resistance
- Free from secondary breakdown
- Low input and output leakage
- Operating Temperature Range: -55°C to +150°C
- Package Option: SOT-89

Switching Waveform

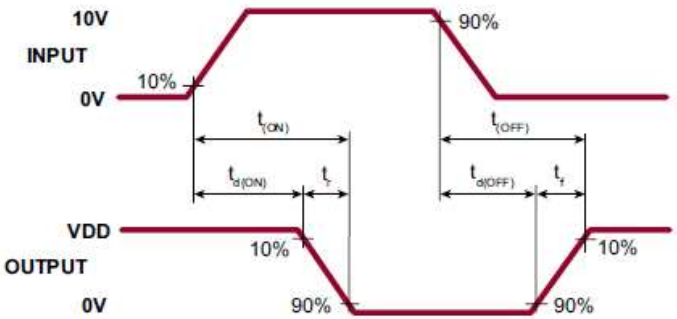

Test Circuit

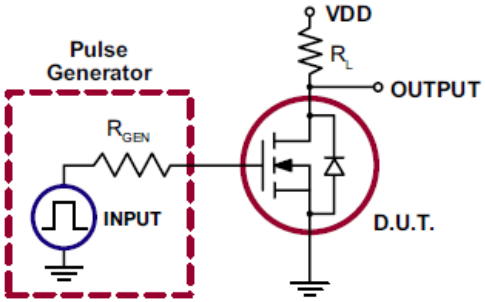

<< BACK

TN2540

Online Datasheet

Features:

- BV_{DSS}: 400V min
- $R_{DS(ON)}$: 12Ω max
- Low threshold: 2.0V max
- High input impedance
- Low input capacitance: 125pF max
- Fast switching speeds
- Low on-resistance
- Free from secondary breakdown
- Low input and output leakage
- Operating Temperature Range: -55°C to +150°C
- Package Option: TO-92, SOT-89

Switching Waveform

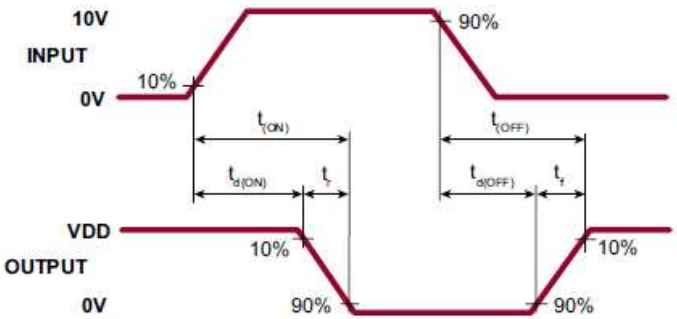

Test Circuit

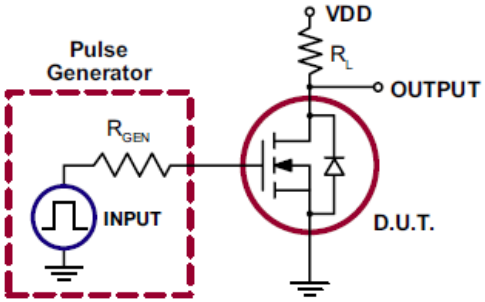

<< BACK

TN2640

Online Datasheet

Features:

- BV_{DSS}: 400V min
- $R_{DS(ON)}$: 5.0Ω max
- Low threshold: 2.0V max
- High input impedance
- Low input capacitance
- Fast switching speeds
- Low on-resistance
- Free from secondary breakdown
- Low input and output leakage
- Operating Temperature Range: -55°C to +150°C
- Package Option: TO-252, TO-92, SOIC-8

Switching Waveform

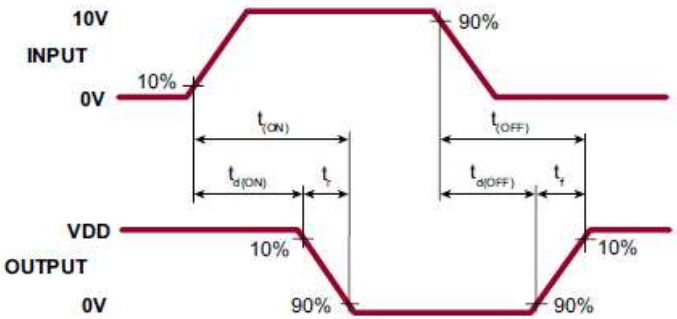

Test Circuit

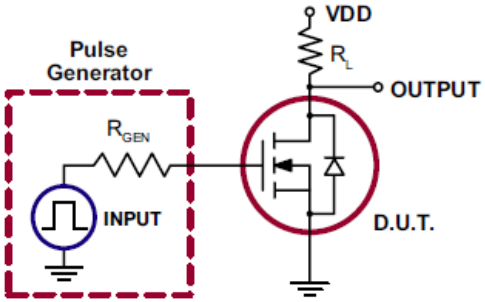

<< BACK

TN5325

Online Datasheet

Features:

- BV_{DSS}: 250V min
- $R_{DS(ON)}$: 7.0Ω max
- Low threshold: 2.0V max
- High input impedance
- Low input capacitance
- Fast switching speeds
- Low on-resistance
- Free from secondary breakdown
- Low input and output leakage
- Operating Temperature Range: -55°C to +150°C
- Package Option: SOT-23, TO-92, SOT-89

Switching Waveform

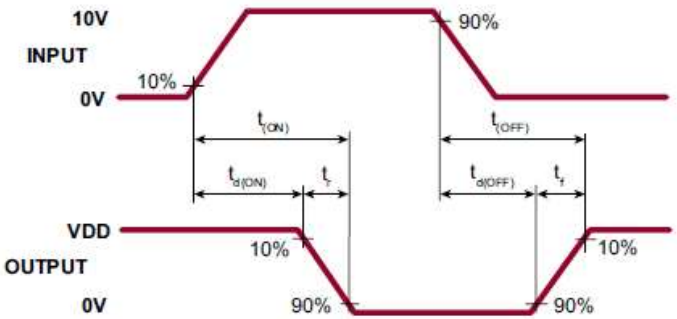

Test Circuit

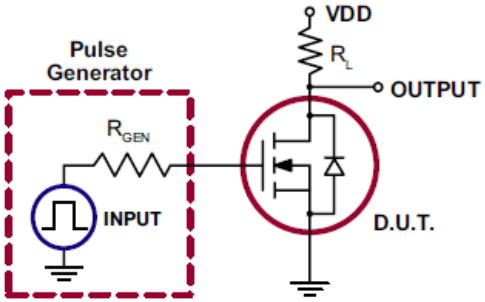

<< BACK

TN5335

Online Datasheet

Features:

- BV_{DSS}: 350V min
- $R_{DS(ON)}$: 15Ω max
- Low threshold
- High input impedance
- Low input capacitance
- Fast switching speeds
- Low on-resistance
- Free from secondary breakdown
- Low input and output leakage
- Operating Temperature Range: -55°C to +150°C
- Package Option: SOT-23, SOT-89

Switching Waveform

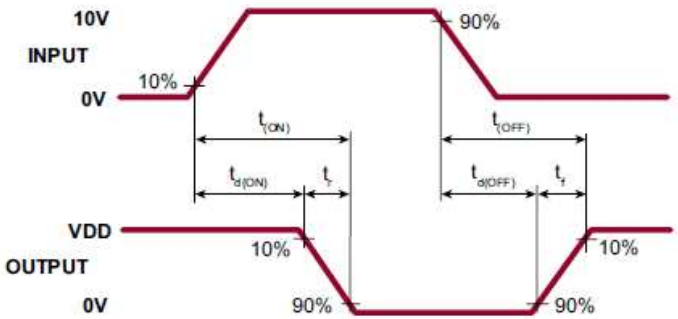

Test Circuit

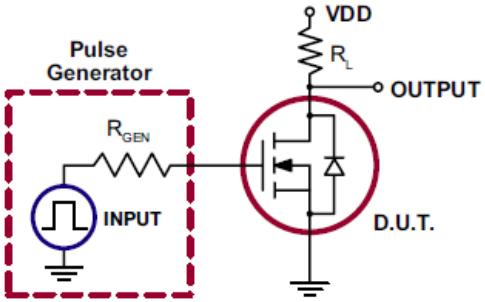

<< BACK

VN0104

Online Datasheet

Features:

- BV_{DSS}: 40V min
- $R_{DS(ON)}$: 3.0Ω max
- Free from secondary breakdown
- Low power drive requirement
- Ease of paralleling
- Low C_{ISS} and fast switching speeds
- Excellent thermal stability
- Integral source-drain diode
- High input impedance and high gain
- Operating Temperature Range: -55°C to +150°C
- Package Option: TO-92

Switching Waveform

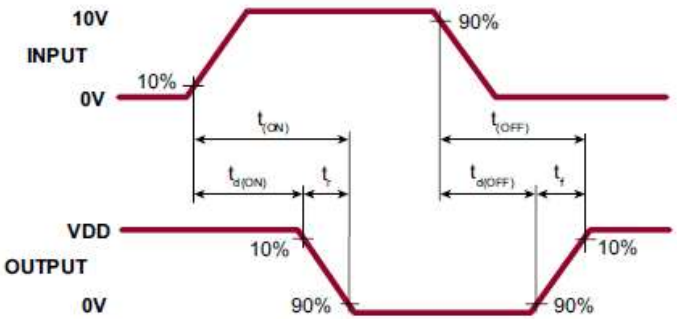

Test Circuit

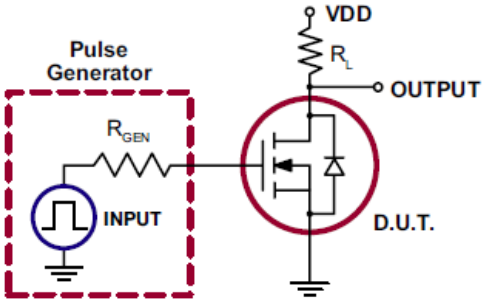

<< BACK

VN0106

Online Datasheet

Features:

- BV_{DSS}: 60V min
- $R_{DS(ON)}$: 3.0Ω max
- Free from secondary breakdown
- Low power drive requirement
- Ease of paralleling
- Low C_{ISS} and fast switching speeds
- Excellent thermal stability
- Integral source-drain diode
- High input impedance and high gain
- Operating Temperature Range: -55°C to +150°C
- Package Option: TO-92

Switching Waveform

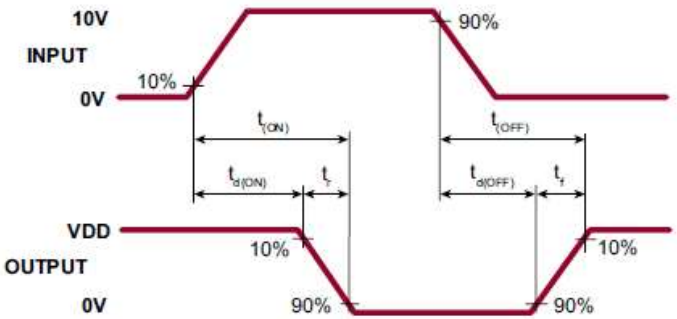

Test Circuit

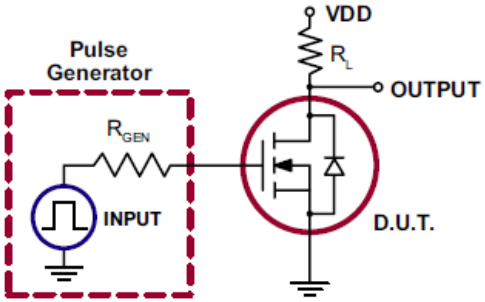

<< BACK

VN0109

Online Datasheet

Features:

- BV_{DSS}: 90V min
- $R_{DS(ON)}$: 3.0Ω max
- Free from secondary breakdown
- Low power drive requirement
- Ease of paralleling
- Low C_{ISS} and fast switching speeds
- Excellent thermal stability
- Integral source-drain diode
- High input impedance and high gain
- Operating Temperature Range: -55°C to +150°C
- Package Option: TO-92

Switching Waveform

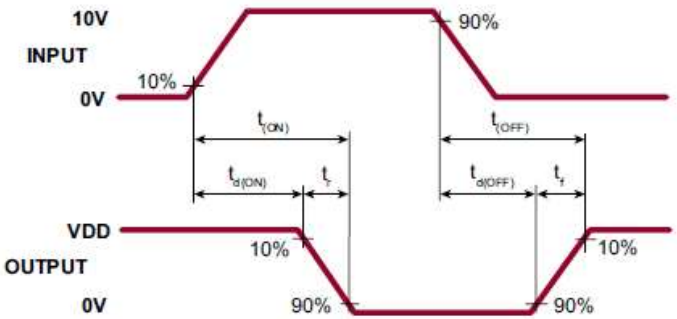

Test Circuit

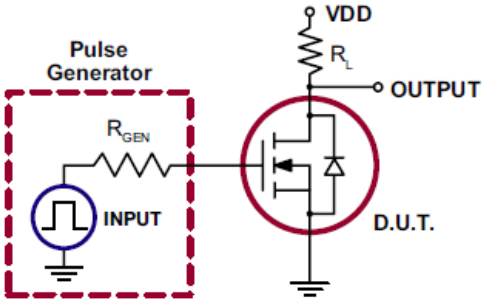

<< BACK

VN0300

Online Datasheet

Features:

- BV_{DSS}: 30V min
- $R_{DS(ON)}$: 1.2Ω max
- Free from secondary breakdown
- Low power drive requirement
- Ease of paralleling
- Low C_{ISS} and fast switching speeds
- Excellent thermal stability
- Integral source-drain diode
- High input impedance and high gain
- Operating Temperature Range: -55°C to +150°C
- Package Option: TO-92

Switching Waveform

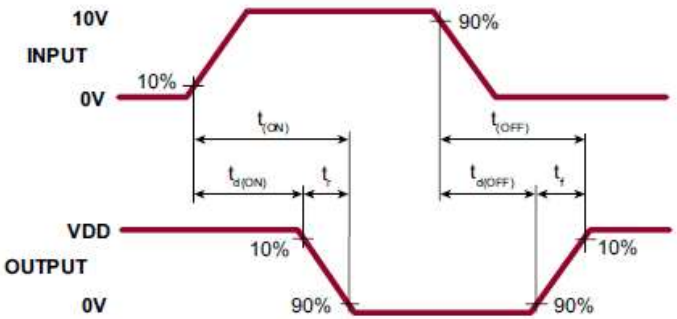

Test Circuit

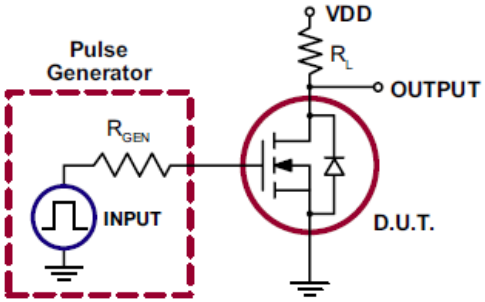

<< BACK

VN0550

Online Datasheet

Features:

- BV_{DSS}: 500V min
- $R_{DS(ON)}$: 60Ω max
- Free from secondary breakdown
- Low power drive requirement
- Ease of paralleling
- Low C_{ISS} and fast switching speeds
- Excellent thermal stability
- Integral source-drain diode
- High input impedance and high gain
- Operating Temperature Range: -55°C to +150°C
- Package Option: TO-92

Switching Waveform

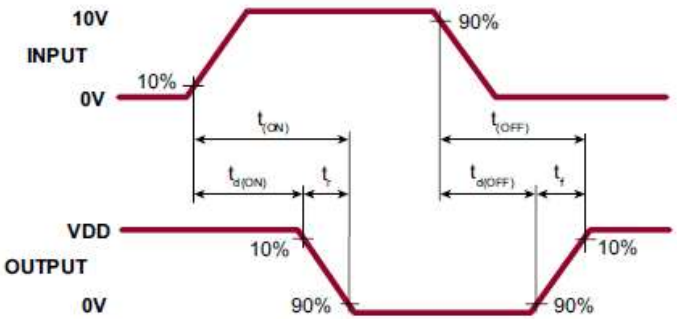

Test Circuit

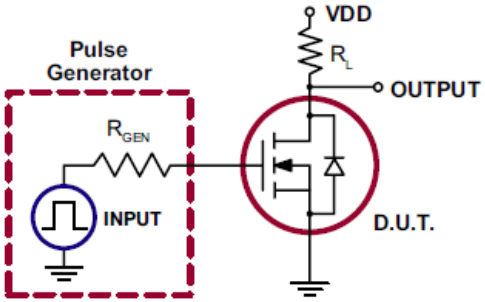

<< BACK

VN0606

Online Datasheet

Features:

- BV_{DSS}: 60V min
- $R_{DS(ON)}$: 3.0Ω max
- Free from secondary breakdown
- Low power drive requirement
- Ease of paralleling
- Low C_{ISS} and fast switching speeds
- Excellent thermal stability
- Integral source-drain diode
- High input impedance and high gain
- Operating Temperature Range: -55°C to +150°C
- Package Option: TO-92

Switching Waveform

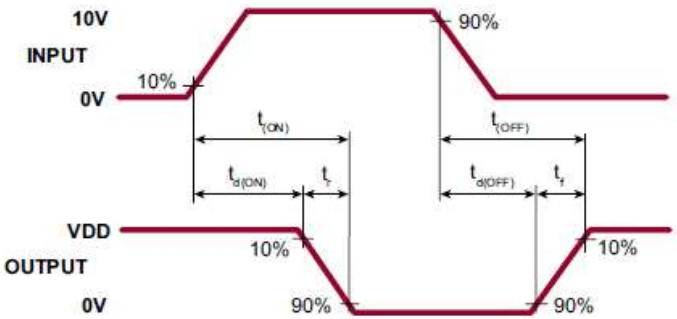

Test Circuit

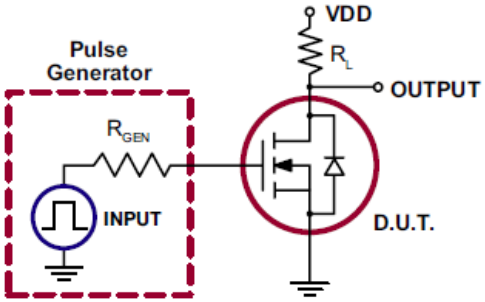

<< BACK

VN0808

Online Datasheet

Features:

- BV_{DSS}: 80V min
- $R_{DS(ON)}$: 4.0Ω max
- Free from secondary breakdown
- Low power drive requirement
- Ease of paralleling
- Low C_{ISS} and fast switching speeds
- Excellent thermal stability
- Integral source-drain diode
- High input impedance and high gain
- Operating Temperature Range: -55°C to +150°C
- Package Option: TO-92

Switching Waveform

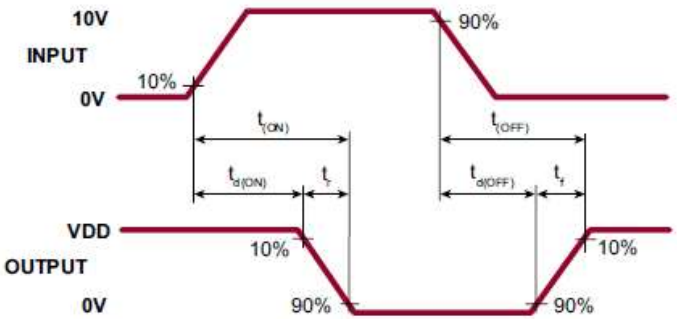

Test Circuit

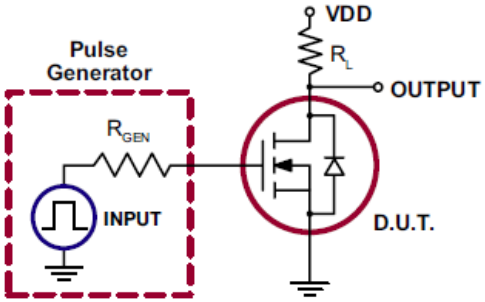

<< BACK

VN10K

Online Datasheet

Features:

- BV_{DSS}: 60V min
- $R_{DS(ON)}$: 5.0Ω max
- Free from secondary breakdown
- Low power drive requirement
- Ease of paralleling
- Low C_{ISS} and fast switching speeds
- Excellent thermal stability
- Integral source-drain diode
- High input impedance and high gain
- Operating Temperature Range: -55°C to +150°C
- Package Option: TO-92

Switching Waveform

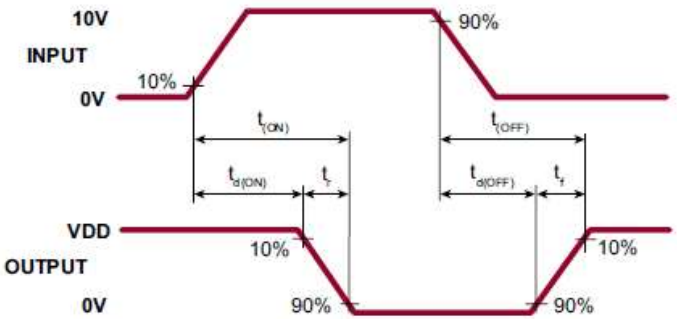

Test Circuit

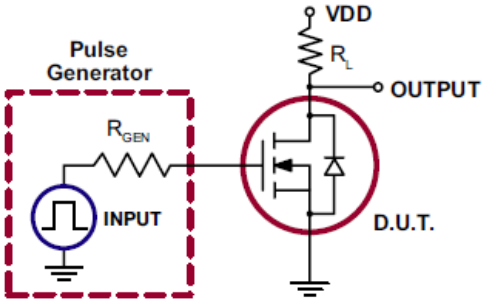

<< BACK

VN1206

Online Datasheet

Features:

- BV_{DSS}: 120V min
- $R_{DS(ON)}$: 6.0Ω max
- Free from secondary breakdown
- Low power drive requirement
- Ease of paralleling
- Low C_{ISS} and fast switching speeds
- Excellent thermal stability
- Integral source-drain diode
- High input impedance and high gain
- Operating Temperature Range: -55°C to +150°C
- Package Option: TO-92

Switching Waveform

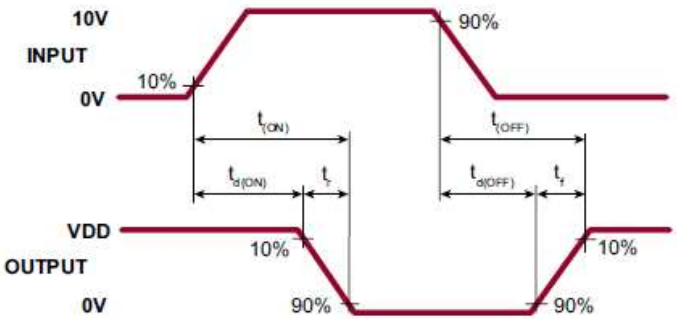

Test Circuit

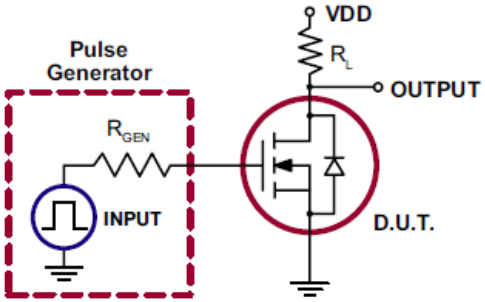

<< BACK

VN2106

Online Datasheet

Features:

- BV_{DSS}: 60V min
- $R_{DS(ON)}$: 4.0Ω max
- Free from secondary breakdown
- Low power drive requirement
- Ease of paralleling
- Low C_{ISS} and fast switching speeds
- Excellent thermal stability
- Integral source-drain diode
- High input impedance and high gain
- Operating Temperature Range: -55°C to +150°C
- Package Option: TO-92

Switching Waveform

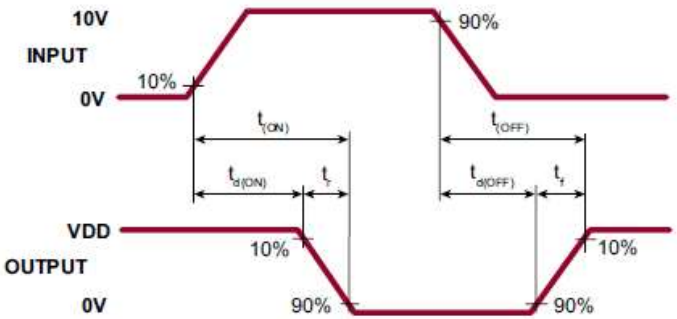

Test Circuit

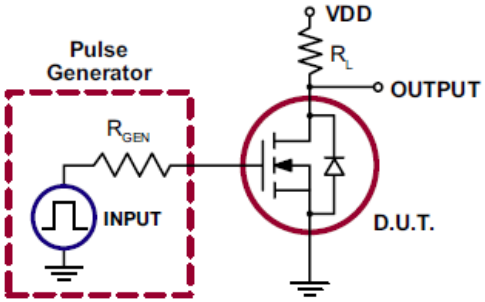

<< BACK

VN2110

Online Datasheet

Features:

- BV_{DSS}: 100V min
- $R_{DS(ON)}$: 4.0Ω max
- Free from secondary breakdown
- Low power drive requirement
- Ease of paralleling
- Low C_{ISS} and fast switching speeds
- High input impedance and high gain
- Operating Temperature Range: -55°C to +150°C
- Package Option: SOT-23

Switching Waveform

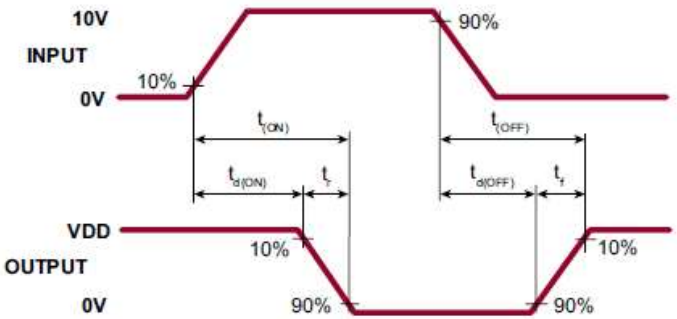

Test Circuit

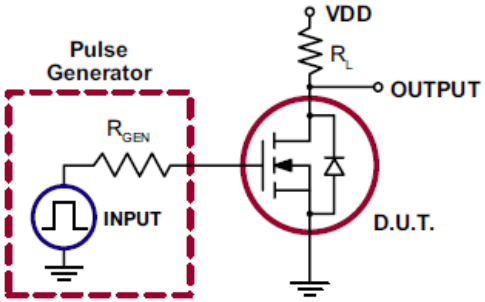

<< BACK

VN2210

Online Datasheet

Features:

- BVDSS: 100V min
- RDS(ON): 0.35Ω max
- Free from secondary breakdown
- Low power drive requirement
- Ease of paralleling
- Low CISS and fast switching speeds
- Excellent thermal stability
- Integral source-drain diode
- High input impedance and high gain
- Operating Temperature Range: -55°C to +150°C
- Package Option: TO-39, TO-92

Switching Waveform

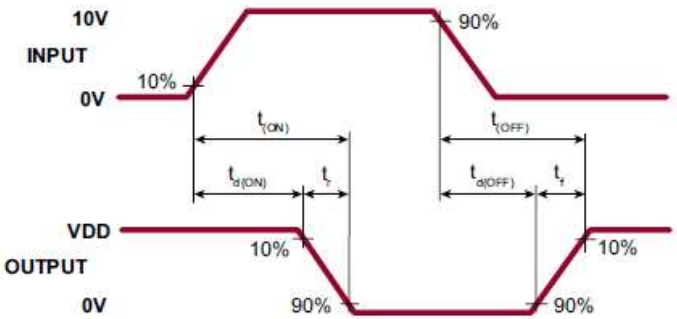

Test Circuit

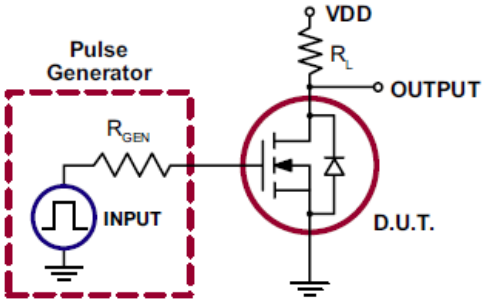

<< BACK

VN2222

Online Datasheet

Features:

- BVDSS: 60V min
- RDS(ON): 7.5Ω max
- Free from secondary breakdown
- Low power drive requirement
- Ease of paralleling
- Low CISS and fast switching speeds
- Excellent thermal stability
- Integral source-drain diode
- High input impedance and high gain
- Operating Temperature Range: -55°C to +150°C
- Package Option: TO-92

Switching Waveform

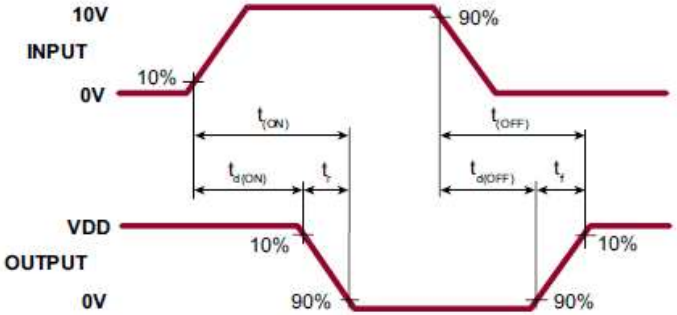

Test Circuit

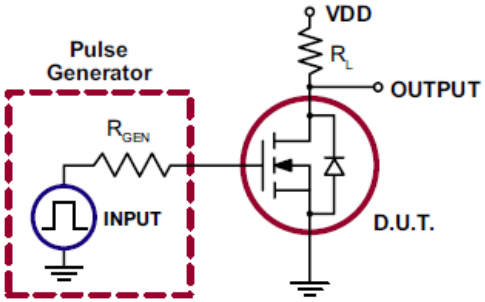

<< BACK

VN2224

Online Datasheet

Features:

- BVDSS: 240V min
- RDS(ON): 1.25Ω max
- Free from secondary breakdown
- Low power drive requirement
- Ease of paralleling
- Low CISS and fast switching speeds
- Excellent thermal stability
- Integral source-drain diode
- High input impedance and high gain
- Operating Temperature Range: -55°C to +150°C
- Package Option: TO-92

Switching Waveform

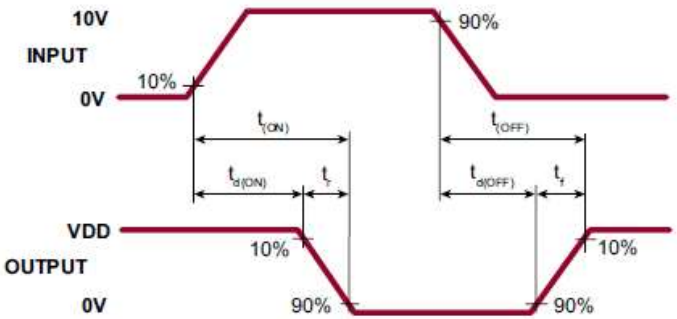

Test Circuit

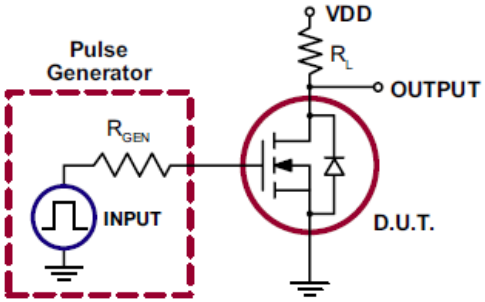

<< BACK

VN2406

Online Datasheet

Features:

- BV_{DSS}: 240V min
- $R_{DS(ON)}$: 6.0Ω max
- Free from secondary breakdown
- Low power drive requirement
- Ease of paralleling
- Low C_{ISS} and fast switching speeds
- Excellent thermal stability
- Integral source-drain diode
- High input impedance and high gain
- Operating Temperature Range: -55°C to +150°C
- Package Option: TO-92

Switching Waveform

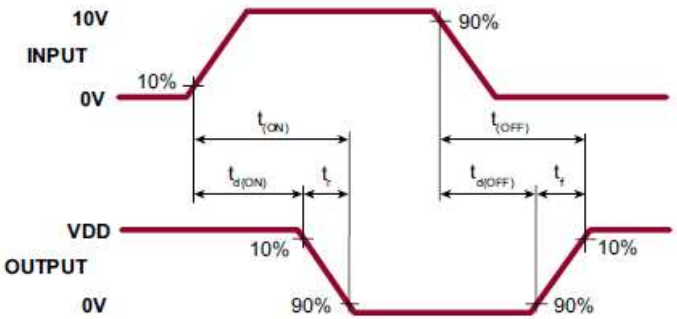

Test Circuit

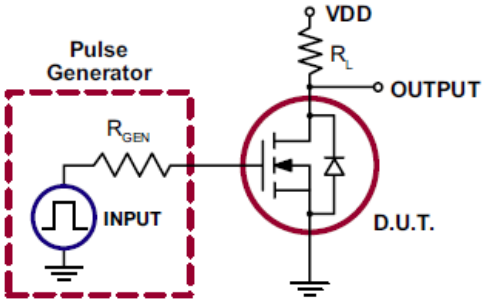

<< BACK

VN2410

Online Datasheet

Features:

- BV_{DSS}: 240V min
- $R_{DS(ON)}$: 10Ω max
- Free from secondary breakdown
- Low power drive requirement
- Ease of paralleling
- Low C_{ISS} and fast switching speeds
- Excellent thermal stability
- Integral source-drain diode
- High input impedance and high gain
- Operating Temperature Range: -55°C to +150°C
- Package Option: TO-92

Switching Waveform

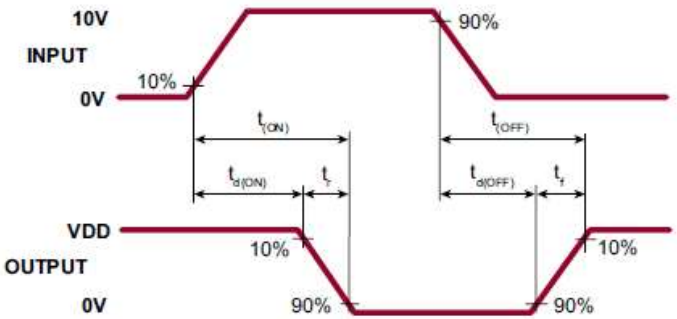

Test Circuit

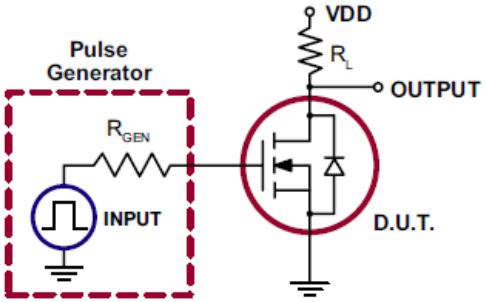

<< BACK

VN2450

Online Datasheet

Features:

- BV_{DSS}: 500V min
- $R_{DS(ON)}$: 13Ω max
- Free from secondary breakdown
- Low power drive requirement
- Ease of paralleling
- Low C_{ISS} and fast switching speeds
- Excellent thermal stability
- Integral source-drain diode
- High input impedance and high gain
- Operating Temperature Range: -55°C to +150°C
- Package Option: TO-92, SOT-89

Switching Waveform

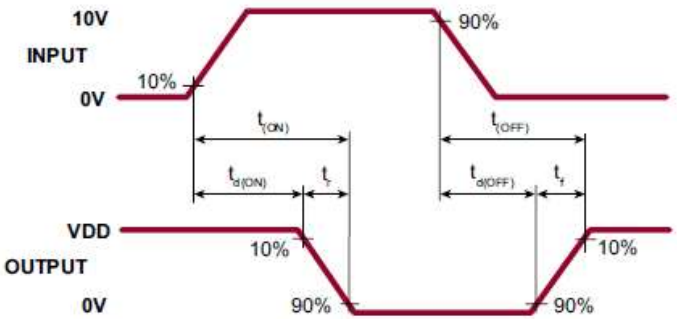

Test Circuit

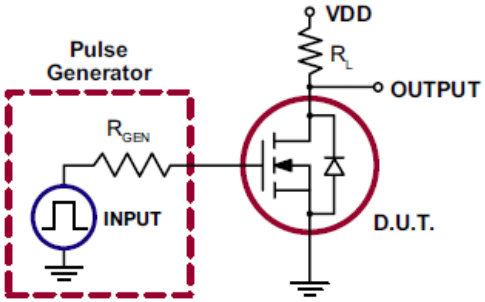

<< BACK

VN2460

Online Datasheet

Features:

- BV_{DSS}: 600V min
- $R_{DS(ON)}$: 20Ω max
- Free from secondary breakdown
- Low power drive requirement
- Ease of paralleling
- Low C_{ISS} and fast switching speeds
- Excellent thermal stability
- Integral source-drain diode
- High input impedance and high gain
- Operating Temperature Range: -55°C to +150°C
- Package Option: TO-92, SOT-89

Switching Waveform

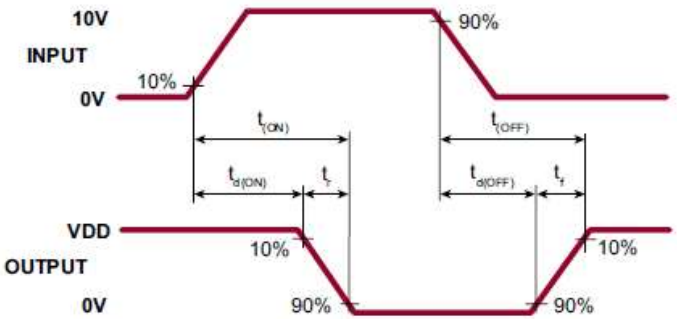

Test Circuit

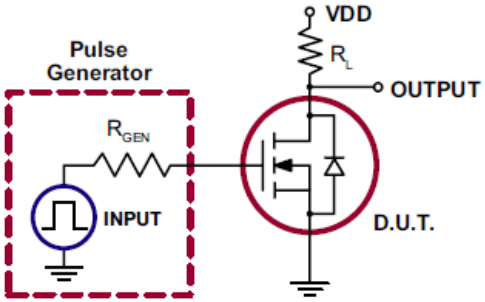

<< BACK

VN3205

Online Datasheet

Features:

- BV_{DSS}: 50V min
- $R_{DS(ON)}$: 0.3Ω max
- Free from secondary breakdown
- Low power drive requirement
- Ease of paralleling
- Low C_{ISS} and fast switching speeds
- Excellent thermal stability
- Integral source-drain diode
- High input impedance and high gain
- Operating Temperature Range: -55°C to +150°C
- Package Option: TO-92, SOT-89

Switching Waveform

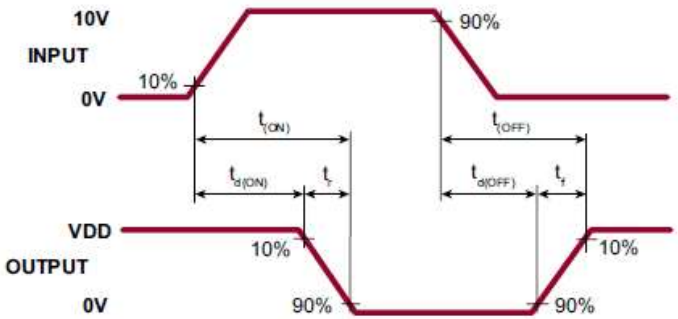

Test Circuit

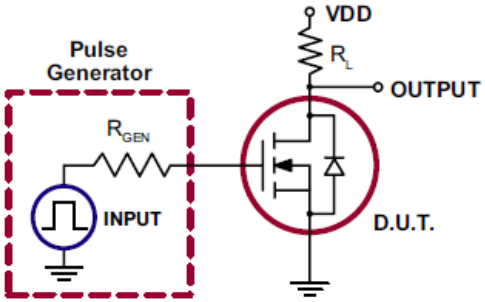

<< BACK

VN4012

Online Datasheet

Features:

- BV_{DSS}: 400V min
- $R_{DS(ON)}$: 12Ω max
- Free from secondary breakdown
- Low power drive requirement
- Ease of paralleling
- Low C_{ISS} and fast switching speeds
- Excellent thermal stability
- Integral source-drain diode
- High input impedance and high gain
- Operating Temperature Range: -55°C to +150°C
- Package Option: TO-92

Switching Waveform

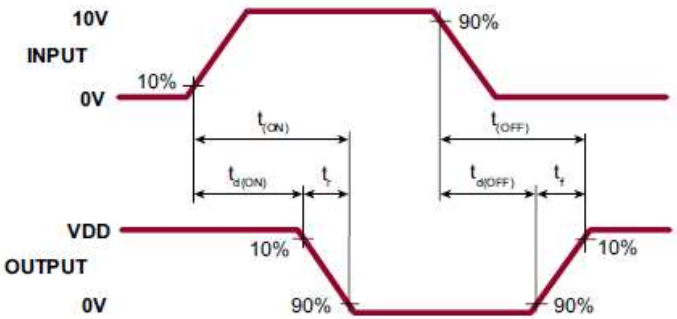

Test Circuit

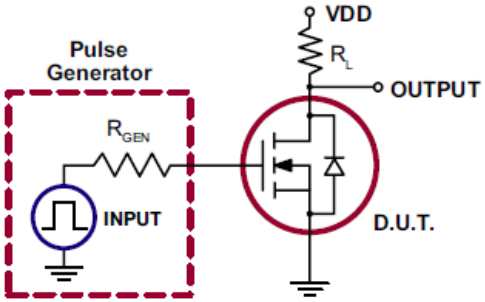

<< BACK

HV9110

Online Datasheet

Features:

- 10 to 120V input voltage range
- Current-mode control
- High efficiency
- Up to 1.0MHz internal oscillator
- Internal start-up circuit
- Low internal noise
- 50% maximum duty cycle
- Operating Temperature Range: -55°C to +125°C
- Package Option: SOIC-14

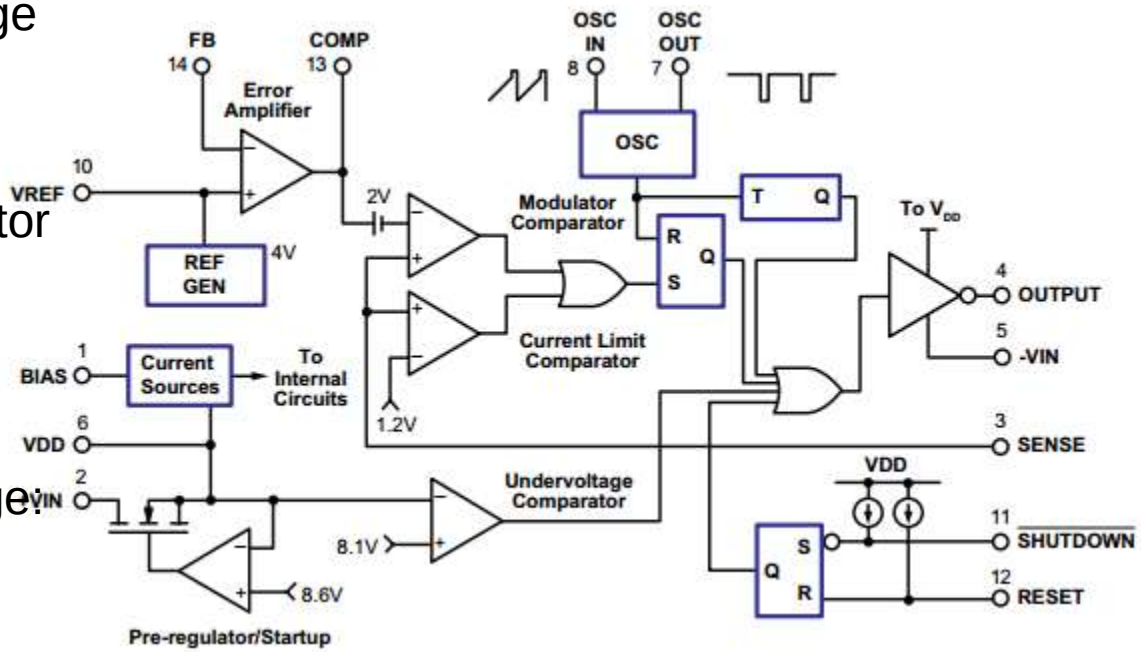

<< BACK

HV9112

Online Datasheet

Features:

- 9.0 to 80V input voltage range
- Current-mode control
- High efficiency
- Up to 1.0MHz internal oscillator
- Internal start-up circuit
- Low internal noise
- 50% maximum duty cycle
- Operating Temperature Range: -55°C to +125°C
- Package Option: SOIC-14

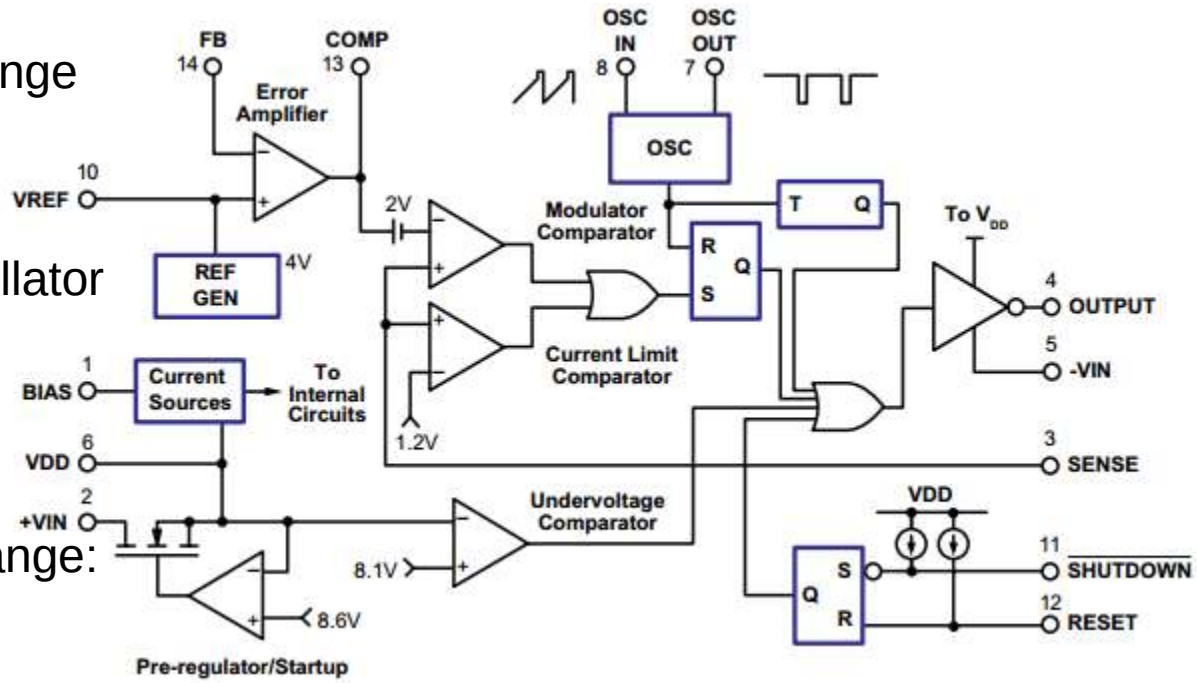

<< BACK

HV9113

Online Datasheet

Features:

- 10 to 120V input voltage range
- Current-mode control
- High efficiency
- Up to 1.0MHz internal oscillator
- Internal start-up circuit
- Low internal noise
- 99% maximum duty cycle
- Operating Temperature Range: -55°C to +125°C
- Package Option: SOIC-14

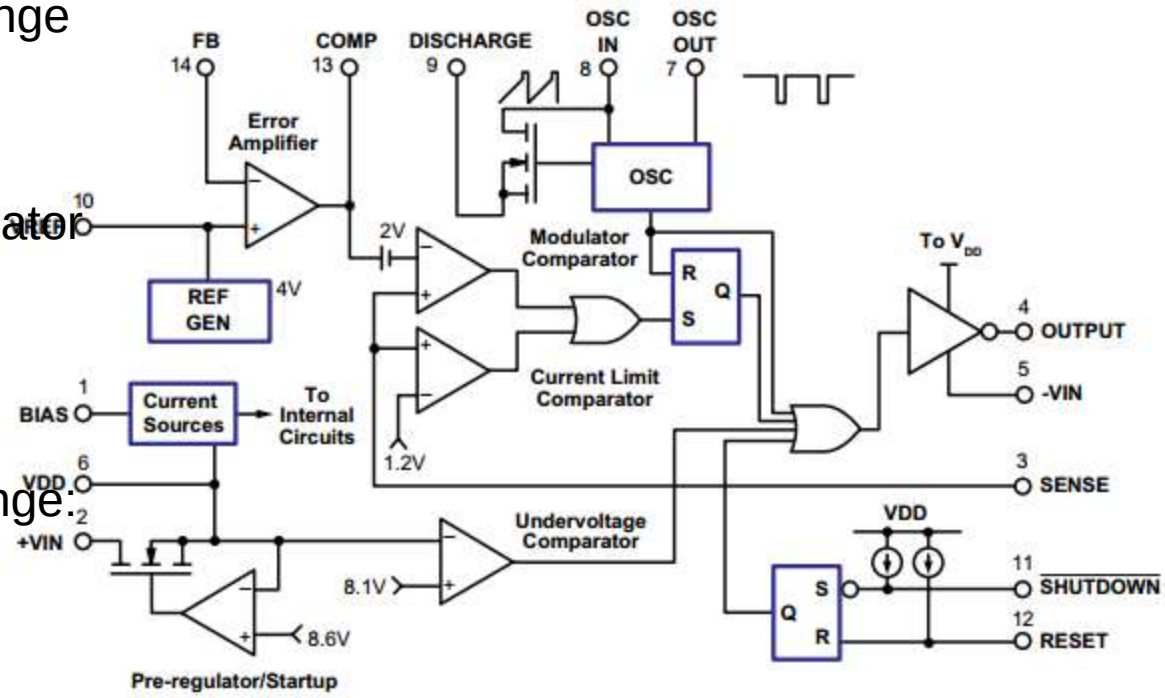

<< BACK

HV9120

Online Datasheet

Features:

- 10 to 450V input voltage range
- <1.3mA supply current
- >1.0MHz clock
- >20:1 dynamic range @ 500KHz
- 49% Maximum duty cycle version
- Low internal noise
- Operating Temperature Range: -55°C to +125°C
- Package Option: SOIC-16

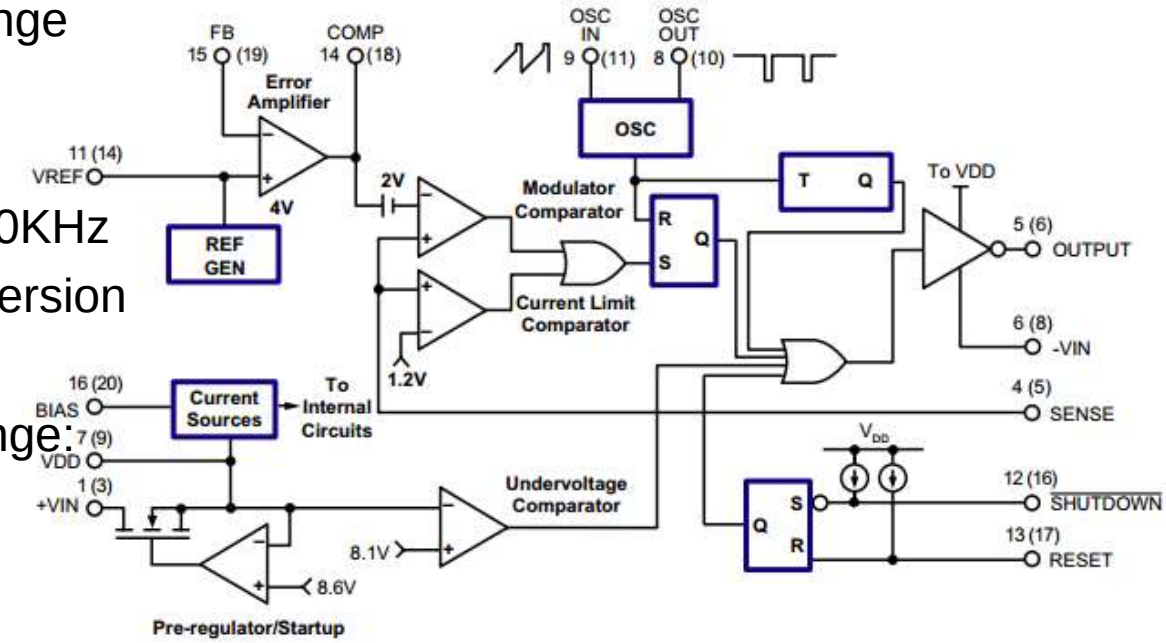

<< BACK

HV9123

Online Datasheet

Features:

- 10 to 450V input voltage range
- <1.3mA supply current
- >1.0MHz clock
- >20:1 dynamic range @ 500kHz
- 99% Maximum duty cycle version
- Low internal noise
- Operating Temperature Range: -55°C to +125°C
- Package Option: SOIC-16

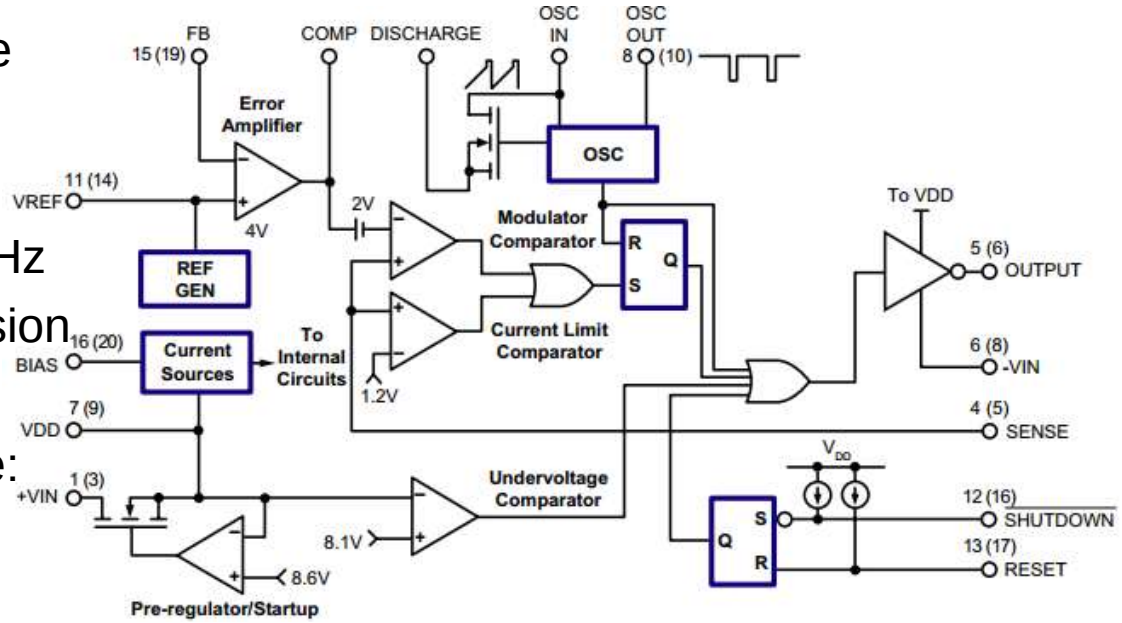

<< BACK

TD9944

Online Datasheet

Features:

- BV_{DSS} : 240V min
- $R_{DS(ON)}$: 6Ω max
- Dual N-channel devices
- Low threshold: 2.0V max
- High input impedance
- Low input capacitance: 125pF max
- Fast switching speeds
- Low on-resistance
- Free from secondary breakdown
- Low input and output leakage
- Operating Temperature Range: -55°C to +150°C
- Package Option: SOIC-8

Switching Waveform

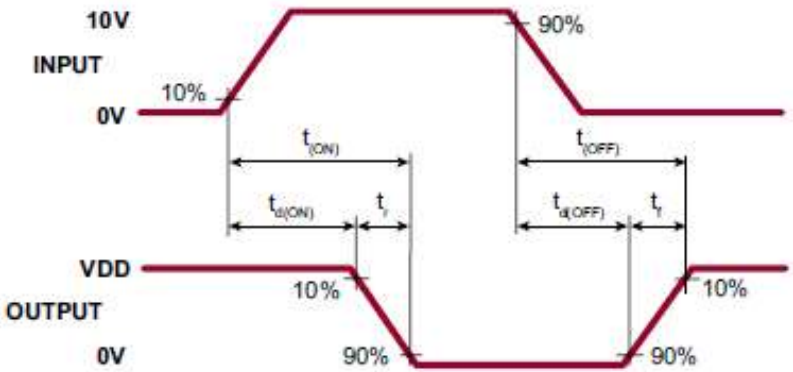

Test Circuit

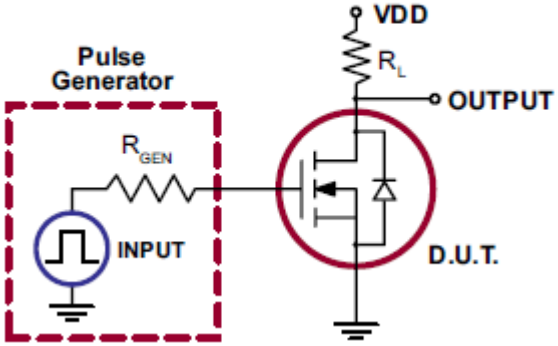

<< BACK

TC1550

Online Datasheet

Features:

- N-Channel
  - BV_{DSS} : 500V min, $R_{DS(ON)}$: 60Ω max
- P-Channel
  - BV_{DSS} : -500V min, $R_{DS(ON)}$: 125Ω max
- Independent N- and P-channels
- Electrically isolated N- and P-channels
- Low input capacitance
- Fast switching speeds
- Free from secondary breakdowns
- Low input and output leakage
- Operating Temperature Range: -55°C to +150°C
- Package Option: SOIC-8

N-Channel Switching Waveform and Test Circuit

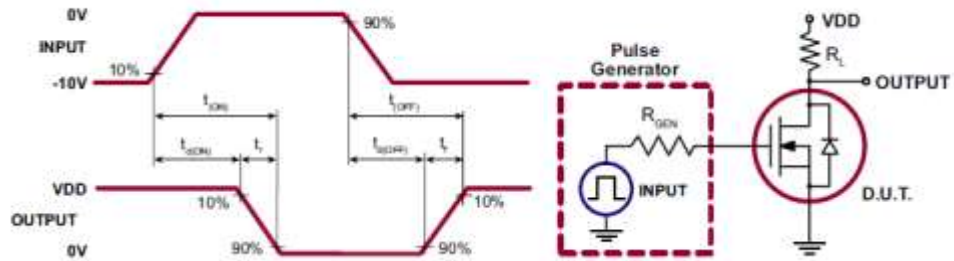

P-Channel Switching Waveform and Test Circuit

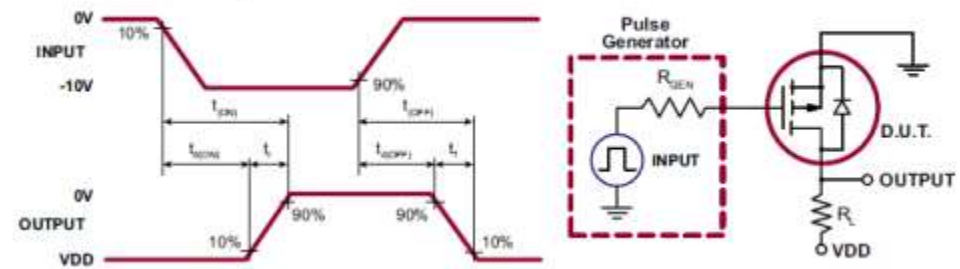

<< BACK

TC2320

Online Datasheet

Features:

- N-Channel
  - BV_{DSS} : 200V min, $R_{DS(ON)}$: 7.0Ω max
- P-Channel
  - BV_{DSS} : -200V min, $R_{DS(ON)}$: 12Ω max
- Low threshold
- Low on-resistance
- Low input capacitance
- Fast switching speeds
- Freedom from secondary breakdown
- Low input and output leakage
- Independent, electrically isolated N- and P-channels
- Low input and output leakage
- Operating Temperature Range: -55°C to +150°C
- Package Option: SOIC-8

N-Channel Switching Waveform and Test Circuit

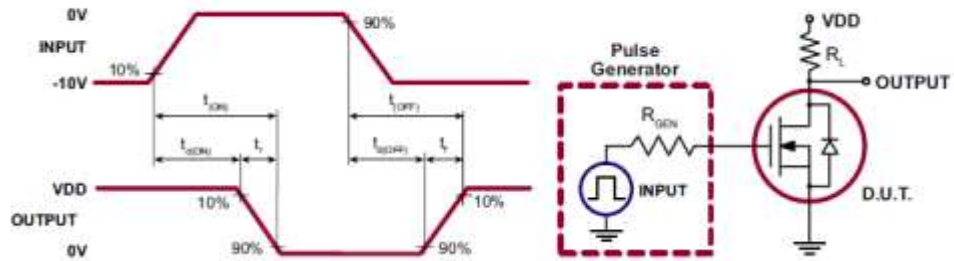

P-Channel Switching Waveform and Test Circuit

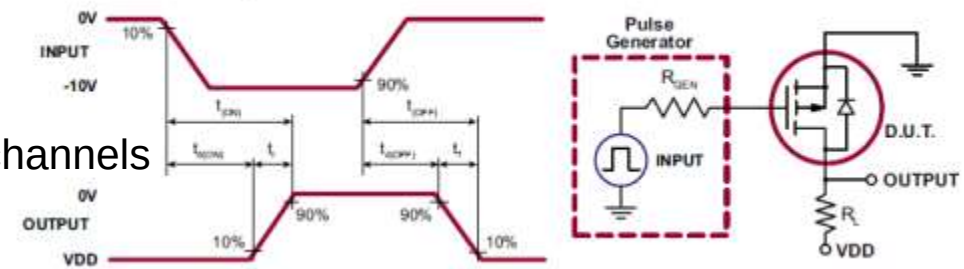

<< BACK

TC6215

Online Datasheet

Features:

- N-Channel
  - BV_{DSS} : 150V min, $R_{DS(ON)}$: 4.0Ω max
- P-Channel
  - BV_{DSS} : -150V min, $R_{DS(ON)}$: 7.0Ω max
- Back to back gate-source Zener diodes
- Guaranteed RDS(ON) at 4.0V gate drive
- Low threshold and low on-resistance
- Independent N- and P-channels
- Electrically isolated N- and P-channels
- Low input capacitance
- Fast switching speeds
- Free from secondary breakdowns
- Low input and output leakage
- Operating Temperature Range: -55°C to +150°C
- Package Option: SOIC-8

N-Channel Switching Waveform and Test Circuit

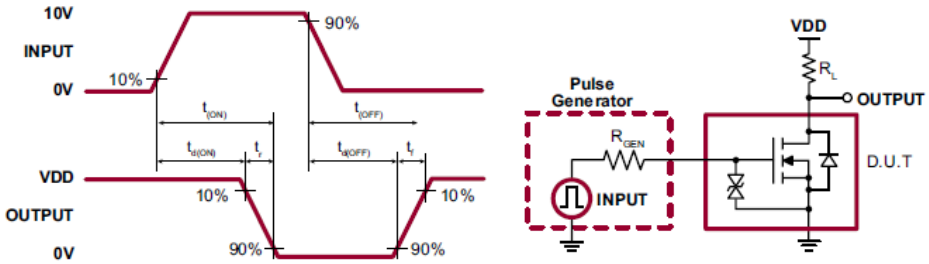

P-Channel Switching Waveform and Test Circuit

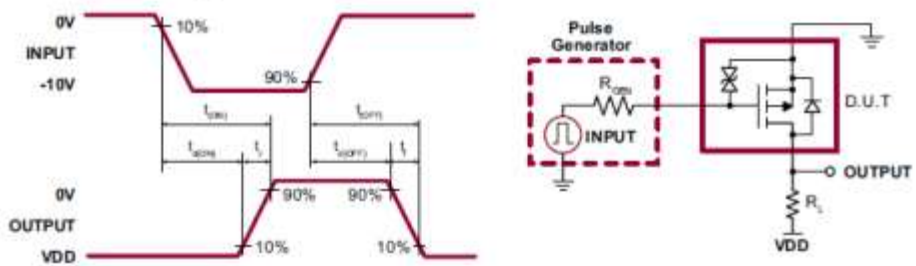

<< BACK

TC6320

Online Datasheet

Features:

- N-Channel
  - BV_{DSS} : 200V min, $R_{DS(ON)}$: 7.0Ω max
- P-Channel
  - BV_{DSS} : -200V min, $R_{DS(ON)}$: 8.0Ω max
- Integrated GATE-to-SOURCE resistor
- Integrated GATE-to-SOURCE Zener diode
- Low threshold and low on-resistance
- Low input capacitance
- Fast switching speeds
- Free from secondary breakdown
- Low input and output leakage
- Independent, electrically isolated N- and P-channels
- Operating Temperature Range:
  -55°C to +150°C
- Package Option: SOIC-8, VDFN-8

N-Channel Switching Waveform and Test Circuit

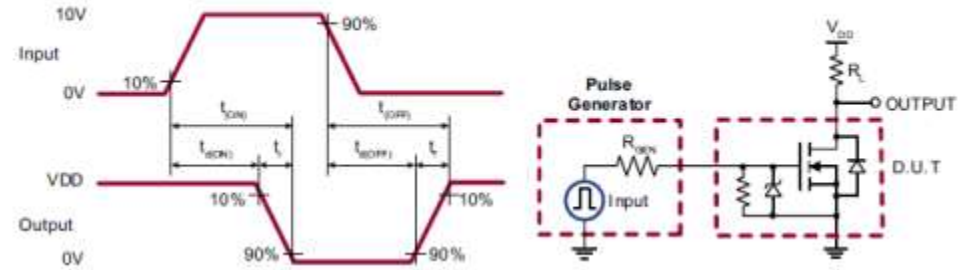

P-Channel Switching Waveform and Test Circuit

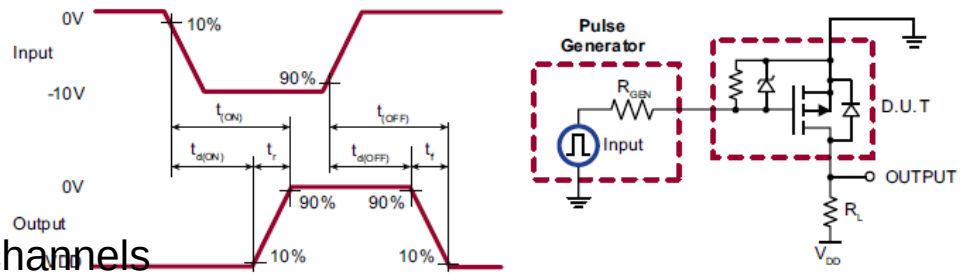

<< BACK

TC7920

Online Datasheet

Features:

- N-Channel
  - BV_{DSS} : 200V min, $R_{DS(ON)}$: 7.0Ω max
- P-Channel
  - BV_{DSS} : -200V min, $R_{DS(ON)}$: 8.0Ω max
- High voltage Vertical DMOS technology
- Integrated drain output high voltage diodes
- Integrated gate-to-source resistor
- Integrated gate-to-source Zener diode
- Low threshold, Low on-resistance
- Low input & output capacitance
- Fast switching speeds
- Electrically isolated N- and P-MOSFET pairs
- Operating Temperature Range:
  -55°C to +150°C
- Package Option: VDFN-12

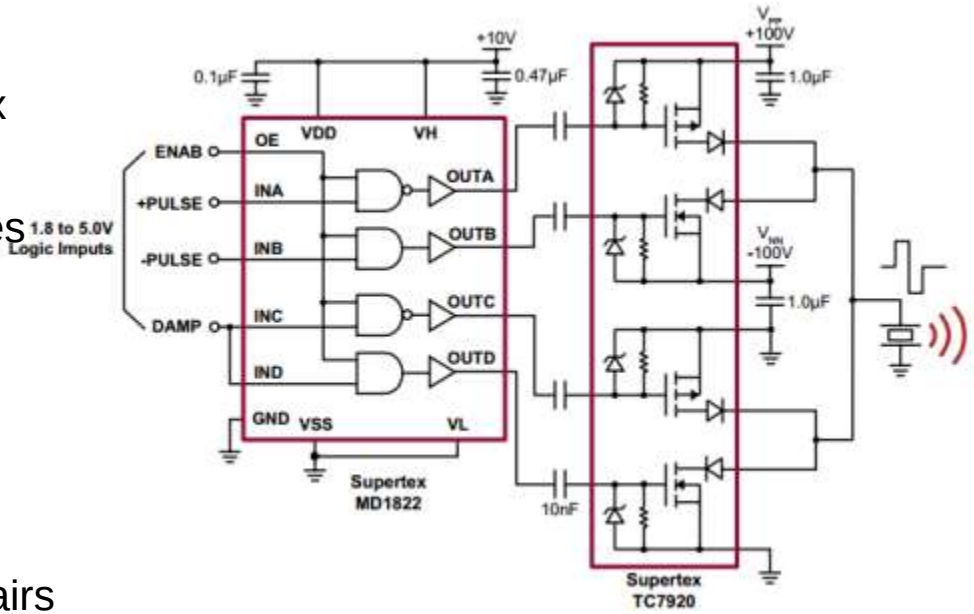

<< BACK

TC8020

Online Datasheet

Features:

- N-Channel
  - BV_{DSS} : 200V min, $R_{DS(ON)}$: 8.0Ω max
- P-Channel
  - BV_{DSS} : -200V min, $R_{DS(ON)}$: 9.5Ω max
- High voltage, vertical DMOS technology
- Integrated gate-to-source resistor
- Integrated gate-to-source Zener diode
- Typical peak output +/-3.5A at 50V
- Low threshold, low on-resistance
- Low input & output capacitance
- Fast switching speeds
- Electrically isolated N- and P-MOSFET pairs
- Operating Temperature Range: -55°C to +150°C
- Package Option: VQFN-56

N-Channel Switching Waveform and Test Circuit

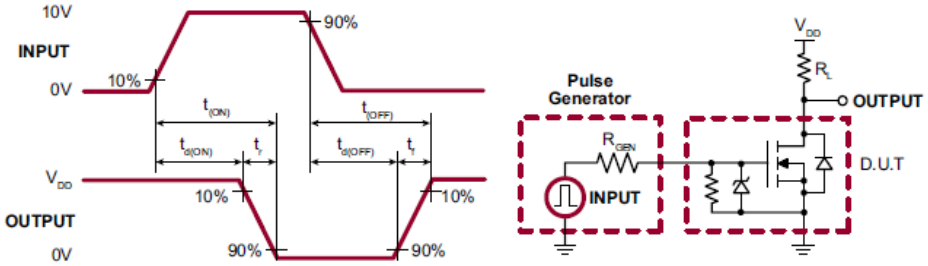

P-Channel Switching Waveform and Test Circuit

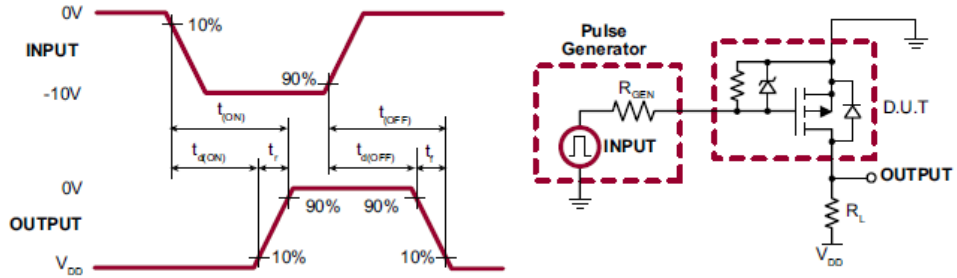

<< BACK

TC8220

Online Datasheet

Features:

- N-Channel
  - BV_{DSS} : 200V min, $R_{DS(ON)}$: 5.3Ω max
- P-Channel
  - BV_{DSS} : -200V min, $R_{DS(ON)}$: 6.5Ω max
- High voltage, vertical DMOS technology
- Integrated gate-to-source resistor
- Integrated gate-to-source Zener diode
- Typical peak output +/-3.5A at 50V
- Low threshold, low on-resistance
- Low input & output capacitance
- Fast switching speeds
- Electrically isolated N- and P-MOSFET pairs
- Operating Temperature Range: -55°C to +150°C
- Package Option: VDFN-12

N-Channel Switching Waveform and Test Circuit

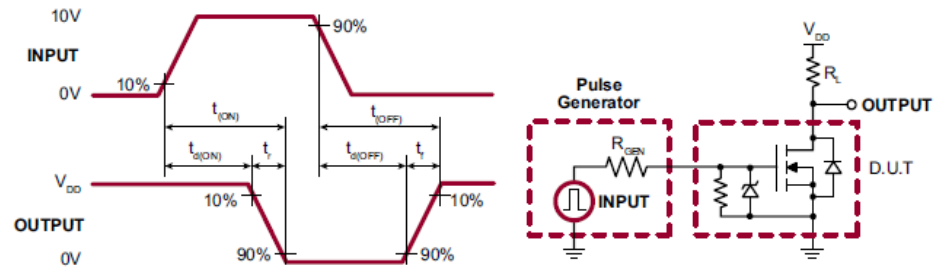

P-Channel Switching Waveform and Test Circuit

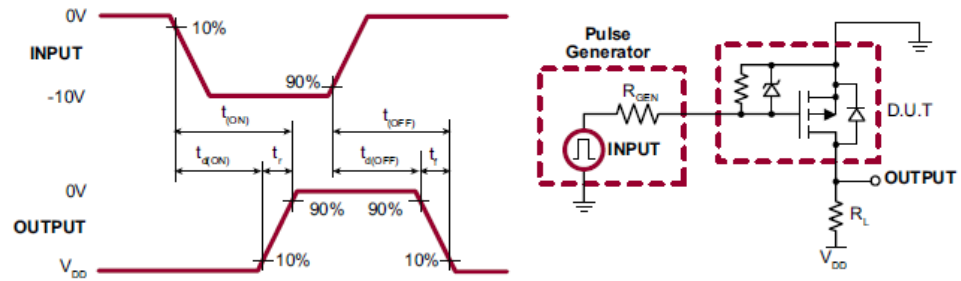

<< BACK

MD0100 / MD0100D

Online Datasheet

Features:

- Up to ±100V input voltage protection
- Low on resistance - 15Ω typical
- Fast switching speed
- Effectively, a simple two terminal device
- No external supplies needed
- Dual & single channel versions of device
- Operating Temperature Range: 0°C to +125°C
- Package Option: DFN-8, SOT-89

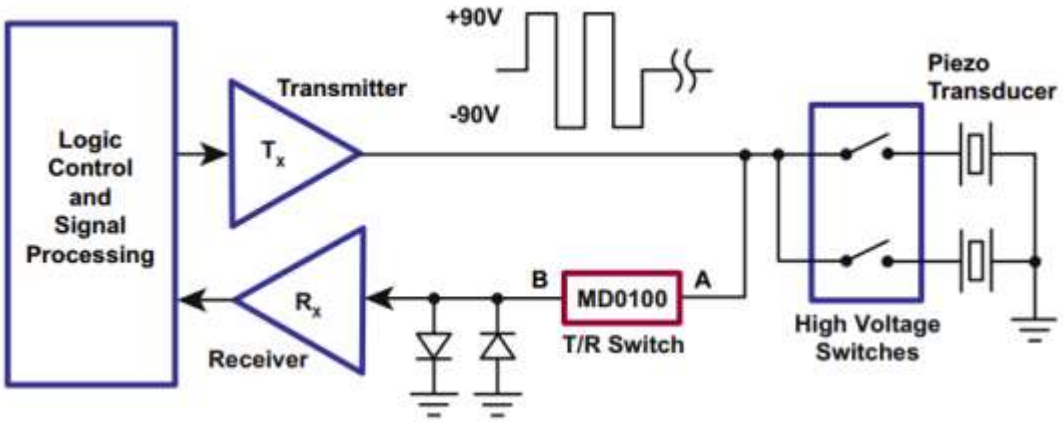

<< BACK

MD0101

Online Datasheet

Features:

- Up to ±100V input voltage protection
- Low on resistance - 15Ω typical
- Integrated clamp diodes
- Fast switching speed
- Four electrically isolated channels
- No external supplies needed
- Operating Temperature Range: 0°C to +125°C
- Package Option: DFN-18

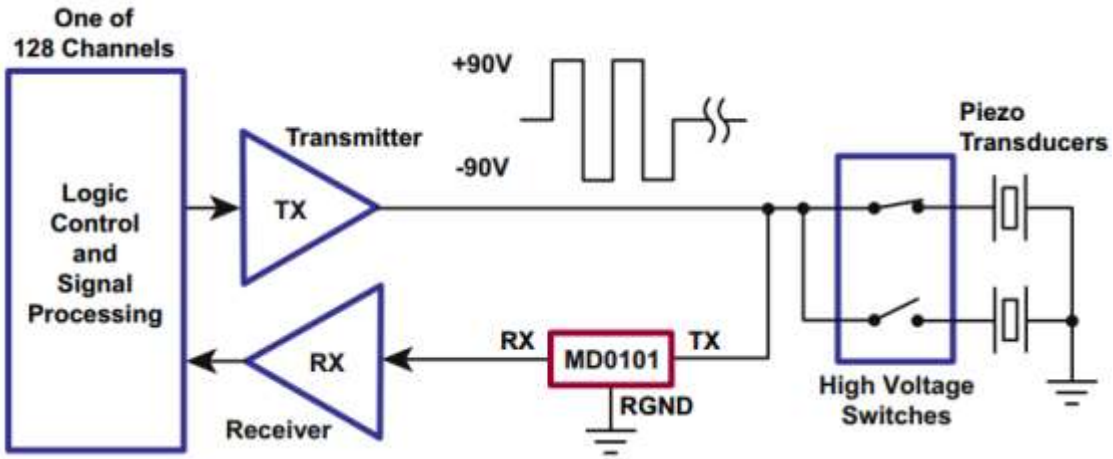

<< BACK

MD0105

Online Datasheet

Features:

- Up to ±130V input voltage protection
- Low on resistance - 15Ω typical
- Fast switching speed
- Four electrically isolated channels
- No external supplies needed
- Operating Temperature Range: 0°C to +125°C
- Package Option: DFN-18

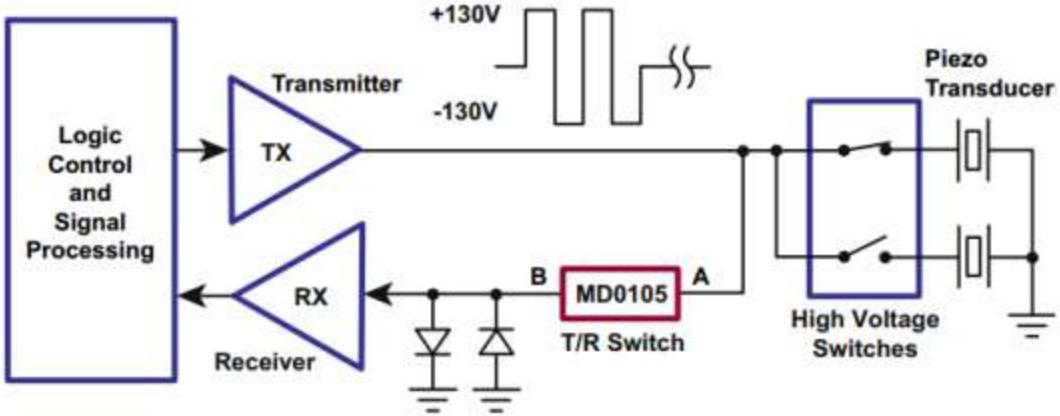

<< BACK

MD1210

Online Datasheet

Features:

- 6ns rise and fall time with 1000pF load
- 2.0A peak output source/sink current
- 1.2V to 5.0V input CMOS compatible
- 4.5V to 13V single positive supply voltage
- Smartlogic threshold
- Low jitter design
- Two matched channels
- Outputs can swing below ground
- Low inductance package
- Thermally-enhanced package
- Operating Temperature Range: -20°C to +85°C
- Package Option: QFN-12

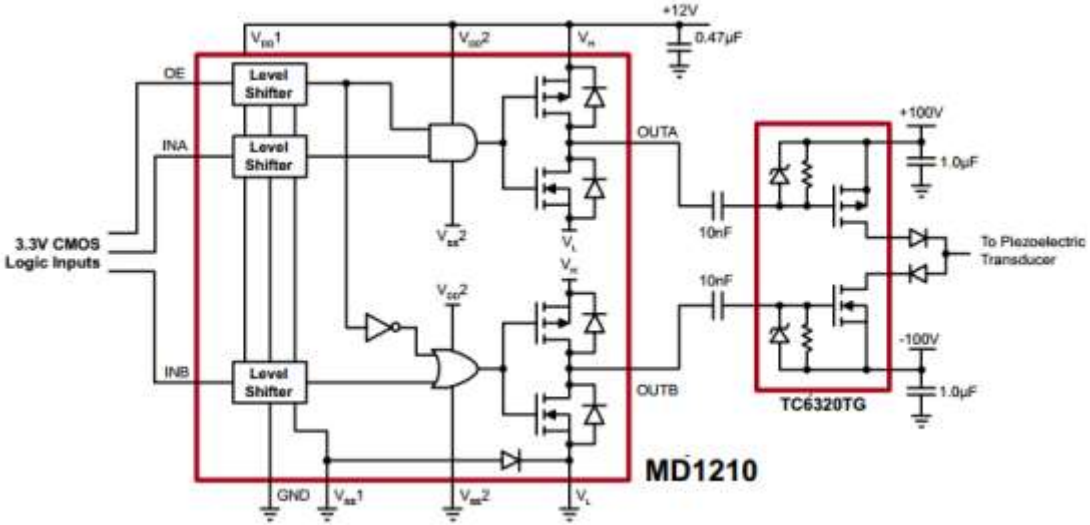

<< BACK

MD1211

Online Datasheet

Features:

- 10ns average rise and fall time with 1000pF load
- 2.0A peak output source/sink current
- 1.8 to 5.0V input CMOS compatible
- 4.5 to 13V total supply voltage
- Dual matched channels
- Reduced clock skew
- Low input capacitance
- Operating Temperature Range: -20°C to +85°C
- Package Option: SOIC-8

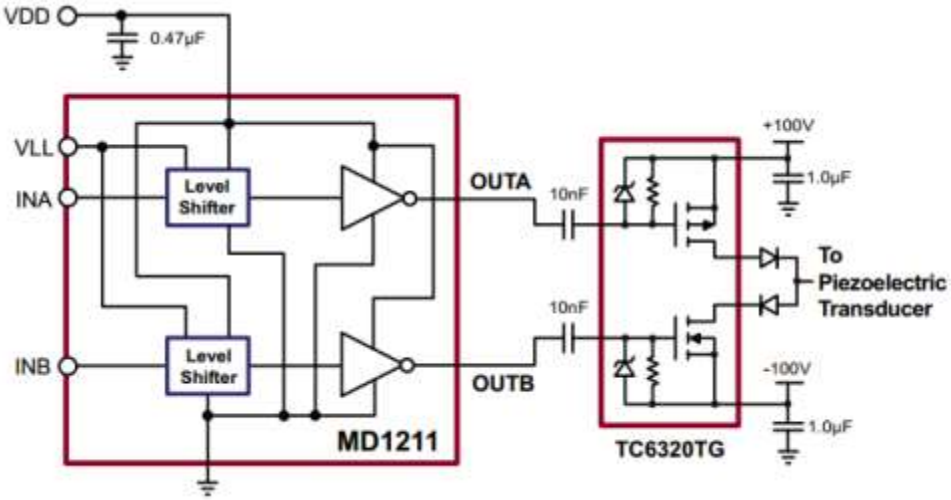

<< BACK

MD1213

Online Datasheet

Features:

- 6.0ns rise and fall time with 1000pF load
- 2.0A peak output source/sink current
- 1.8 to 5.0V input CMOS compatible
- 4.5 to 13V total supply voltage
- Smart logic threshold
- Low jitter design
- Two matched channels
- Outputs can swing below ground
- Low inductance package
- Thermally-enhanced package
- Operating Temperature Range: -20°C to +85°C
- Package Option: QFN-12

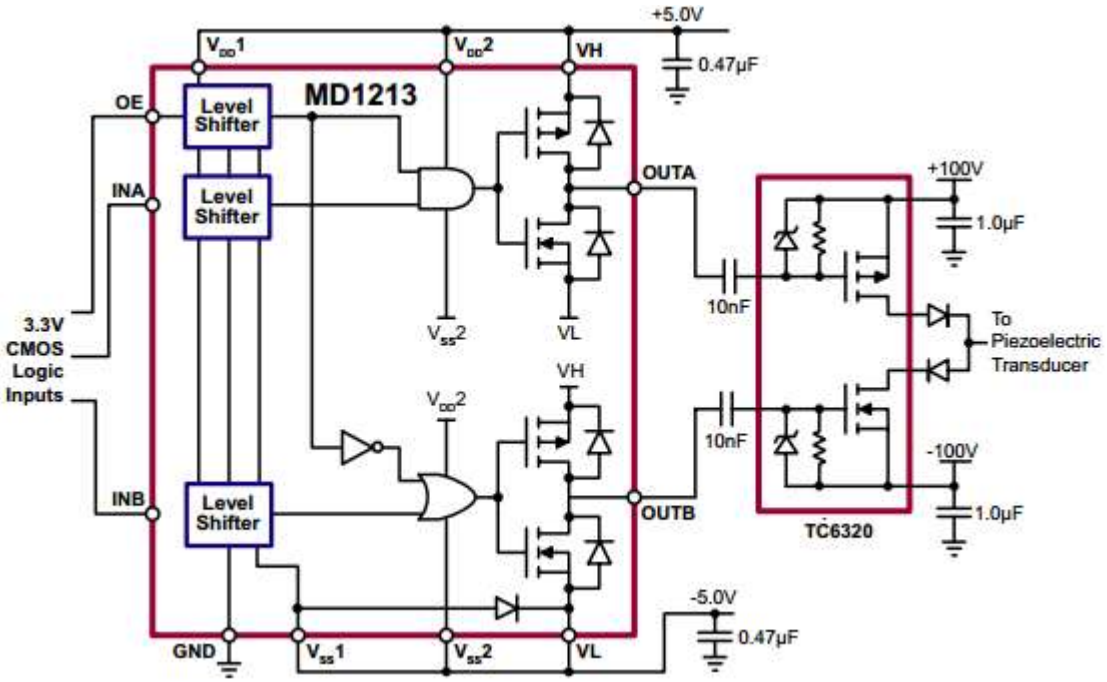

<< BACK

MD1810

Online Datasheet

Features:

- 6.0ns rise and fall time with 1000pF load
- 2.0A peak output source/sink current
- 1.8 to 5.0V input CMOS compatible
- 5.0 to 12V total supply voltage
- Smart logic threshold
- Low jitter design
- Four matched channels
- Outputs can swing below ground
- Output is high impedance when disabled
- Low inductance package
- Operating Temperature Range: -20°C to +85°C
- Package Option: QFN-16

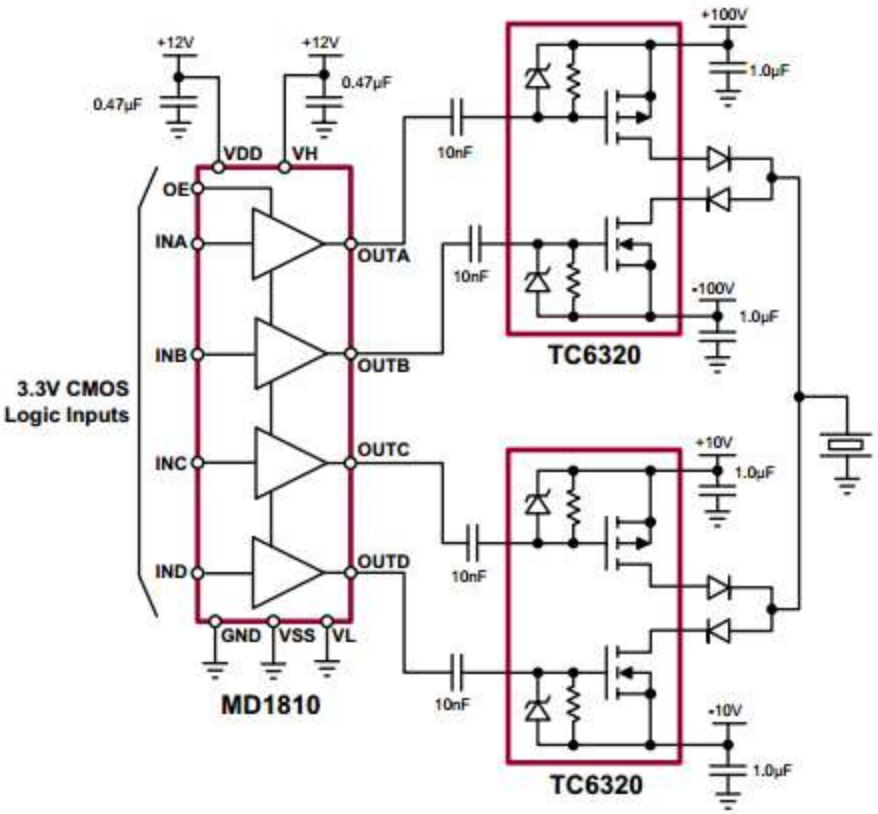

<< BACK

MD1811

Online Datasheet

Features:

- 6.0ns rise and fall time
- 2.0A peak output source/sink current
- 1.8 to 5.0V input CMOS compatible
- 5.0 to 12V total supply voltage
- Smart logic threshold
- Low jitter design
- Quad matched channels
- Drives two P- and two N-channel MOSFETs
- Outputs can swing below ground
- Low inductance quad flat no-lead package
- Operating Temperature Range: -20°C to +85°C
- Package Option: QFN-16

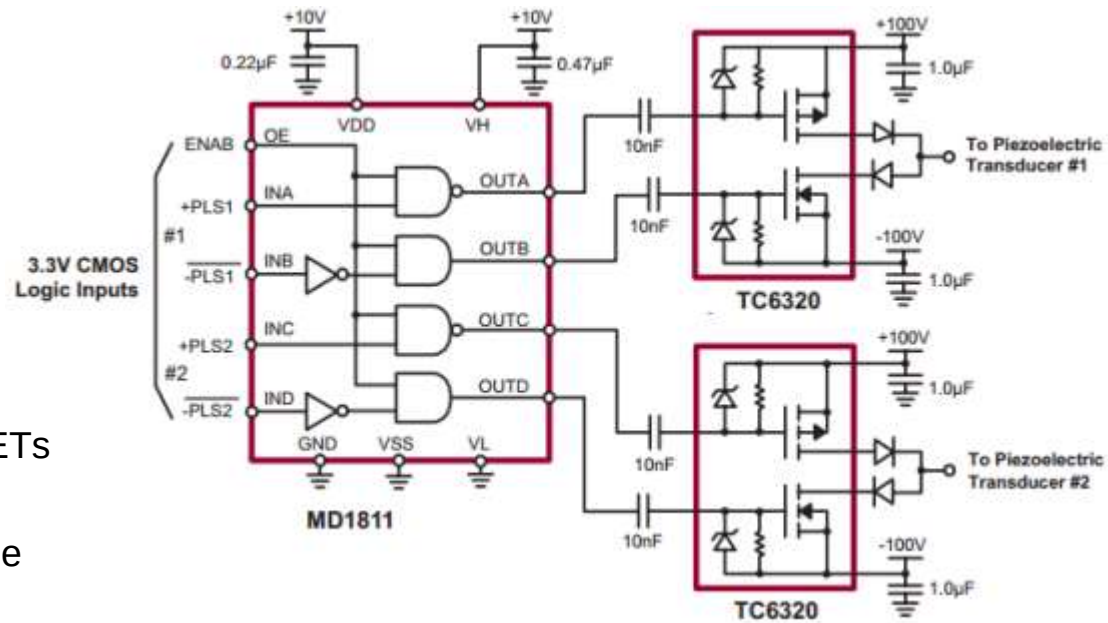

<< BACK

MD1812

Online Datasheet

Features:

- 6.0ns rise and fall time
- 2.0A peak output source/sink current
- 1.8 to 5.0V input CMOS compatible
- Smart logic threshold
- Low jitter design
- Quad matched channels
- Drives two N and two P-channel MOSFETs
- Outputs can swing below ground
- Built-in level translator for negative gate bias
- User-defined damping for return-to-zero application
- Low inductance quad flat no-lead package
- Operating Temperature Range: -25°C to +125°C
- Package Option: QFN-16

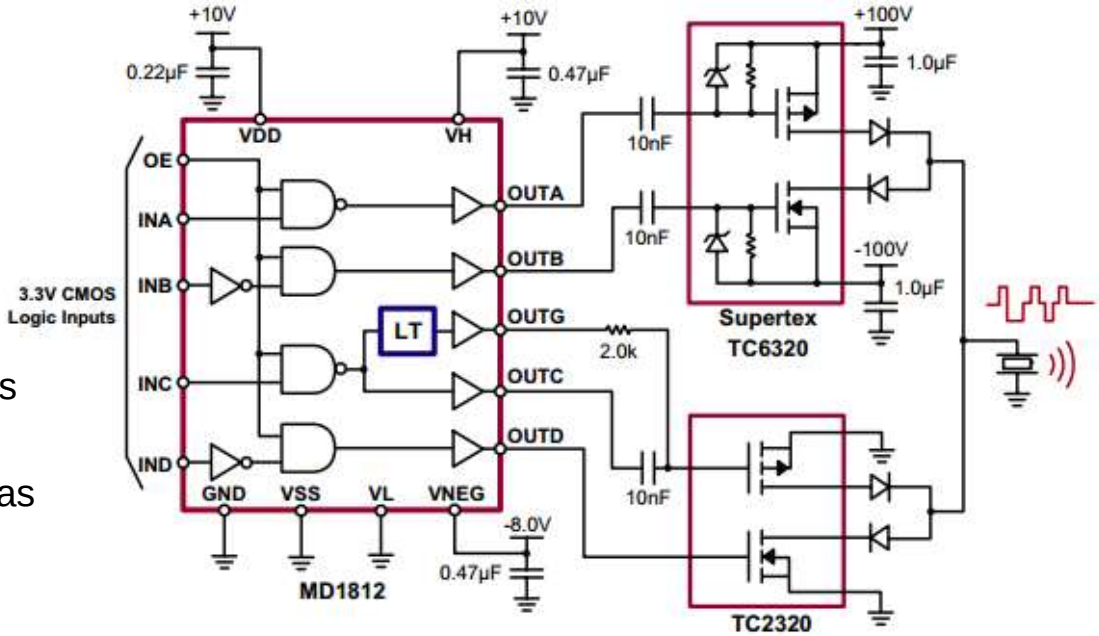

<< BACK

MD1813

Online Datasheet

Features:

- 6ns rise and fall time
- 2.0A peak output source/sink current
- 1.8 to 5.0V input CMOS compatible
- Smart Logic threshold
- Low jitter design
- Quad matched channels
- Drives two N and two P-channel MOSFETs
- Outputs can swing below ground
- Built-in level translator for negative gate bias
- Non-inverting gate driver OUTD for easy logic
- Operating Temperature Range: -20°C to +85°C
- Package Option: QFN-16

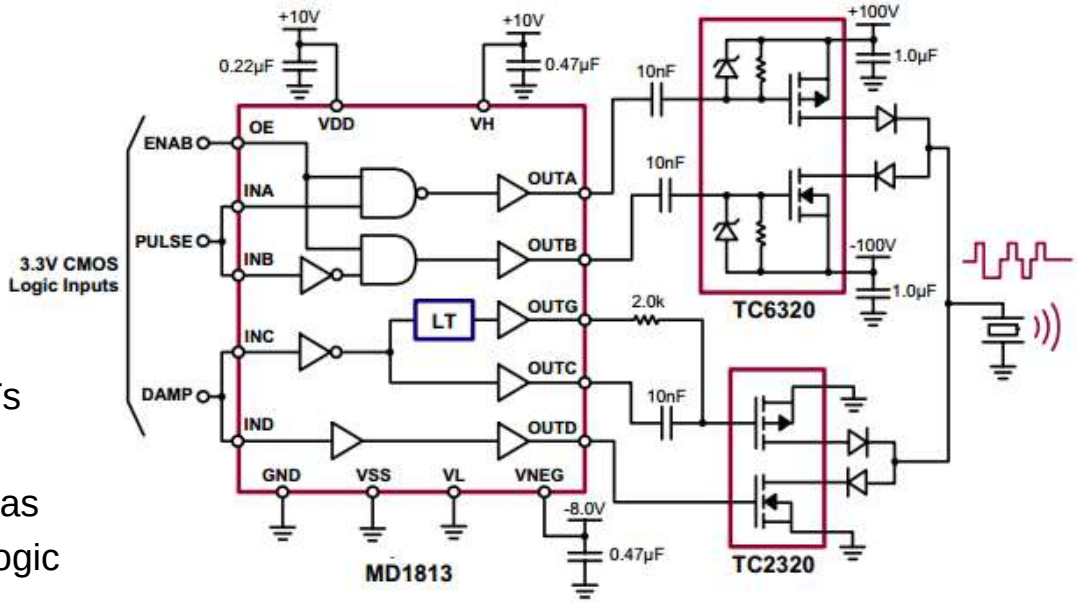

<< BACK

MD1820

Online Datasheet

Features:

- Non-inverting, four channel MOSFET driver
- 6.0ns rise and fall time
- 2.0A peak output source/sink current
- 1.8 to 5.0V input CMOS compatible
- 5.0 to 10V total supply voltage
- Smart logic threshold
- Low jitter design
- Four matched channels
- Drives two P- and two N-channel MOSFETs
- Outputs can swing below ground
- Operating Temperature Range: -20°C to +85°C
- Package Option: QFN-16

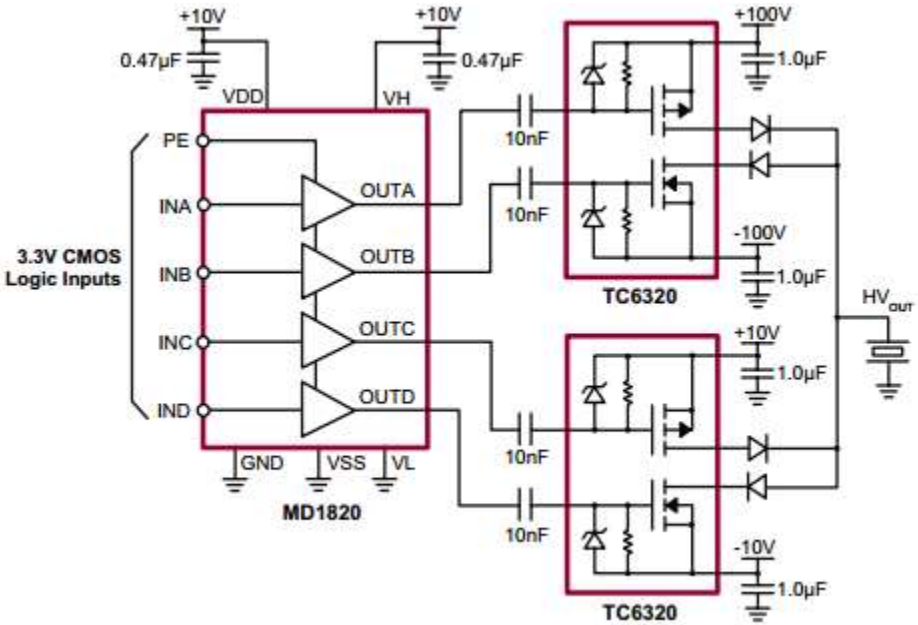

<< BACK

MD1821

Online Datasheet

Features:

- Inverting MOSFET driver
- 6.0ns rise and fall time
- 2.0A peak output source/sink current
- 1.8 to 5.0V input CMOS compatible
- 5.0 to 10V total supply voltage
- Smart logic threshold
- Low jitter design
- Four matched channels
- Drives two P- and two N-channel MOSFETs
- Outputs can swing below ground
- Operating Temperature Range: 20°C to +85°C
- Package Option: QFN-16

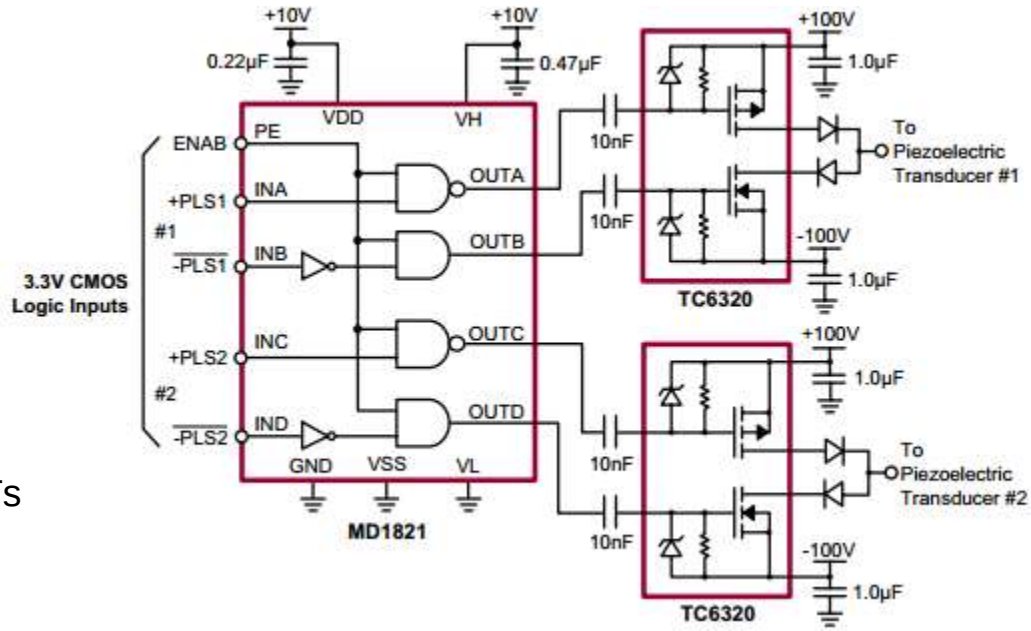

<< BACK

MD1822

Online Datasheet

Features:

- Mixed inversion MOSFET driver
- 6.0ns rise and fall time
- 2.0A peak output source/sink current
- 1.8 to 5.0V input CMOS compatible
- 5.0 to 10V total supply voltage
- Smart logic threshold
- Low jitter design
- Four matched channels
- Drives two P- and two N-channel MOSFETs
- Outputs can swing below ground
- Operating Temperature Range: -20°C to +85°C
- Package Option: QFN-16

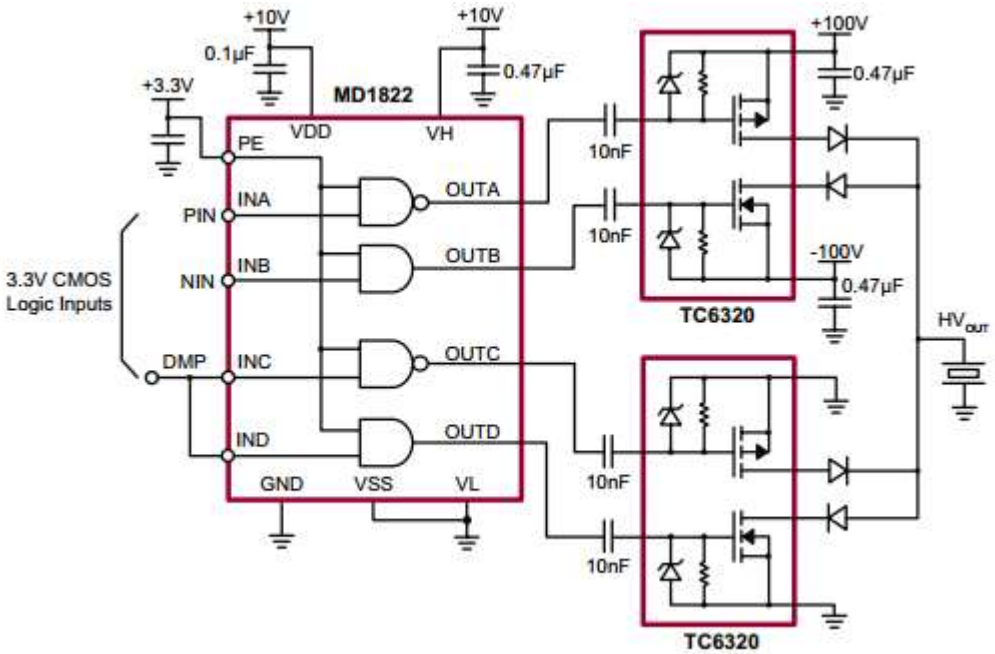

<< BACK

MD1711

Online Datasheet

Features:

- Drives two ultrasound transducer channels
- Generates 5-level waveform
- Drives 12 high voltage MOSFETs
- ±2.0A source and sink peak current
- Up to 20MHz output frequency
- 12V/ns slew rate
- ±3ns matched delay times
- Second harmonic is less than -40dB
- Two separate gate drive voltages
- 1.8 to 3.3V CMOS logic interface
- Operating Temperature Range: 0°C to +125°C
- Package Option: LQFP-48, QFN-48

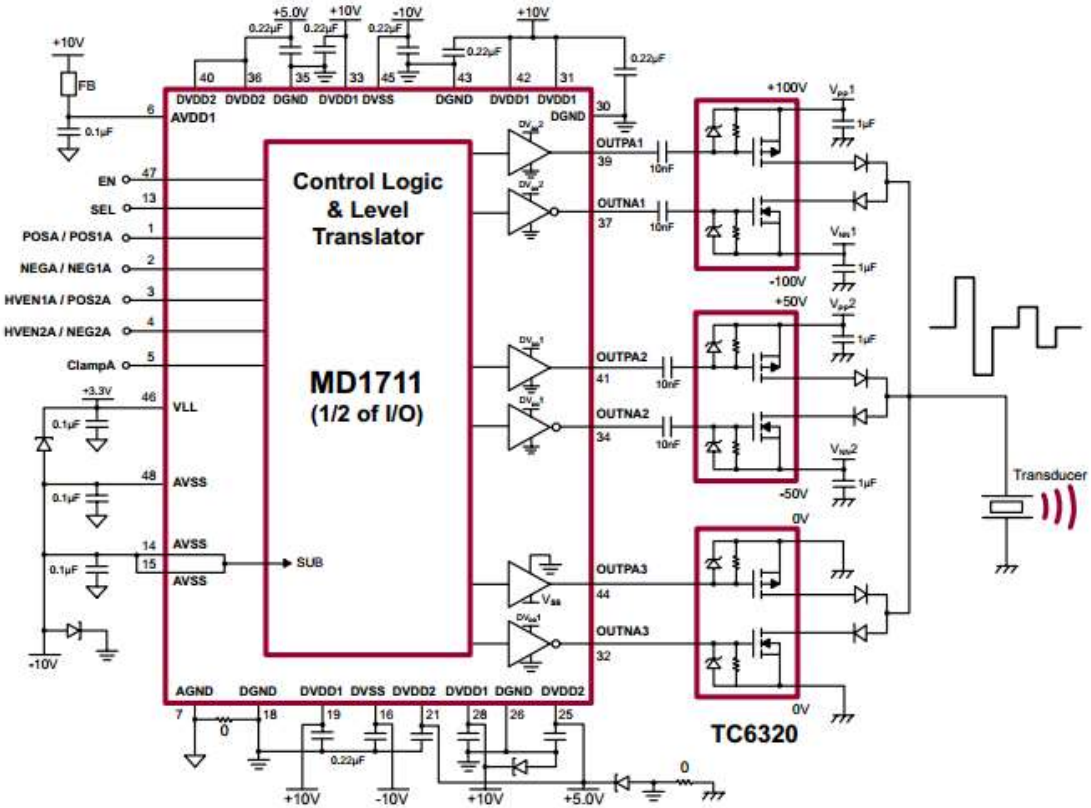

<< BACK

MD1712

Online Datasheet

Features:

- Drives two ultrasound transducer channels
- Generates five-level waveform
- Drives 12 high voltage MOSFETs
- ±2.0A source and sink peak current
- Up to 20MHz output frequency
- 12V/ns slew rate
- ±3.0ns matched delay times
- Second harmonic is less than -40dB
- Two separate gate drive voltages
- 1.8 to 3.3V CMOS logic interface
- Operating Temperature Range: 0°C to +125°C
- Package Option: LQFP-48, QFN-48

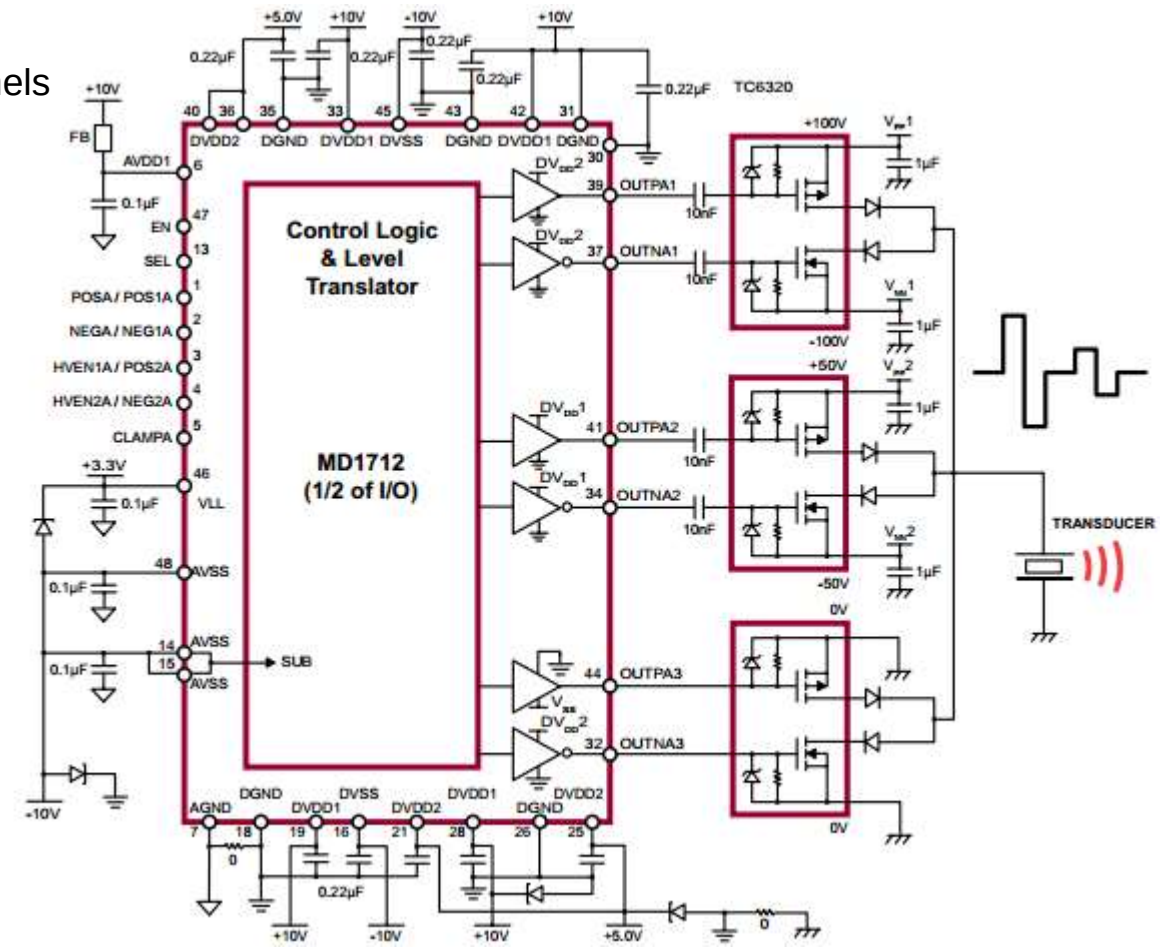

<< BACK

MD1715

Online Datasheet

Features:

- Advanced CMOS technology
- ±4.75 to 12.9V gate drive voltage
- 2A output source and sink current
- 6.5ns rise and fall time with 1nF load
- 10ns propagation delay
- ±2ns matched delay times
- 12 matched channels
- 1.8V to 3.3V CMOS logic interface
- Smart logic threshold
- Low inductance package
- Operating Temperature Range: 0°C to +70°C
- Package Option: QFN-40

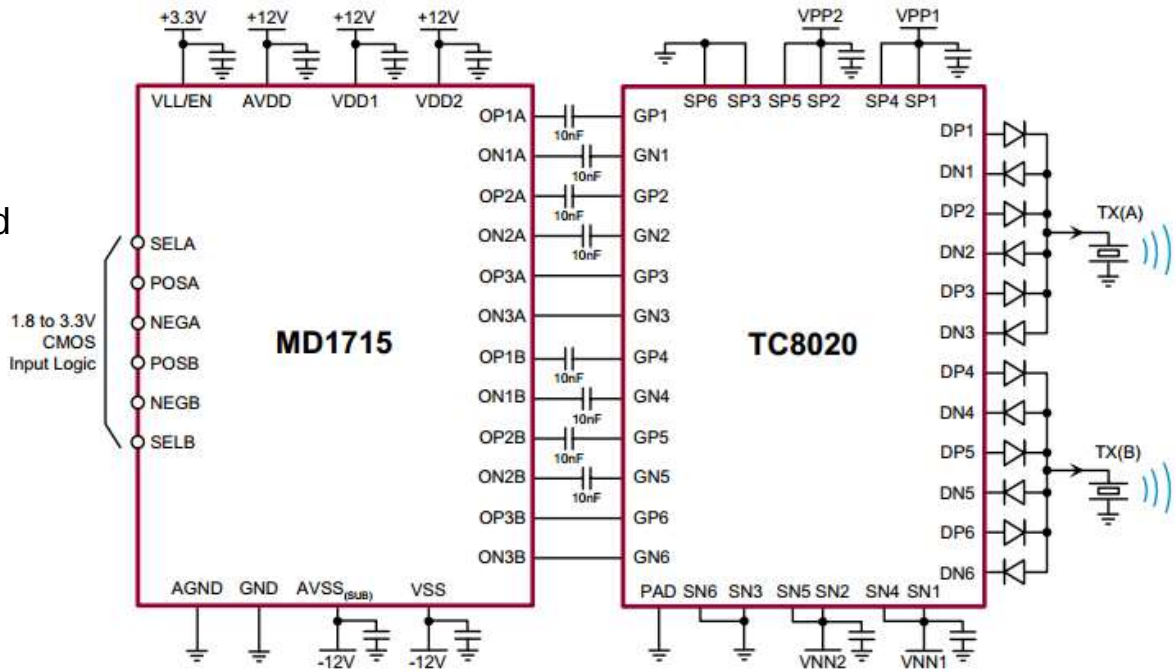

<< BACK

MD1716

Online Datasheet

Features:

- Advanced CMOS technology
- 4.5 to 12.5V power supply voltage
- 2.0A output source and sink current
- 6.5ns rise and fall time with 1.0nF load
- 10ns propagation delay
- ±2ns matched delay times
- 12 matched channels
- 1.8 to 3.3V CMOS logic interface
- Smart logic threshold
- Operating Temperature Range: 0°C to +125°C
- Package Option: QFN-40

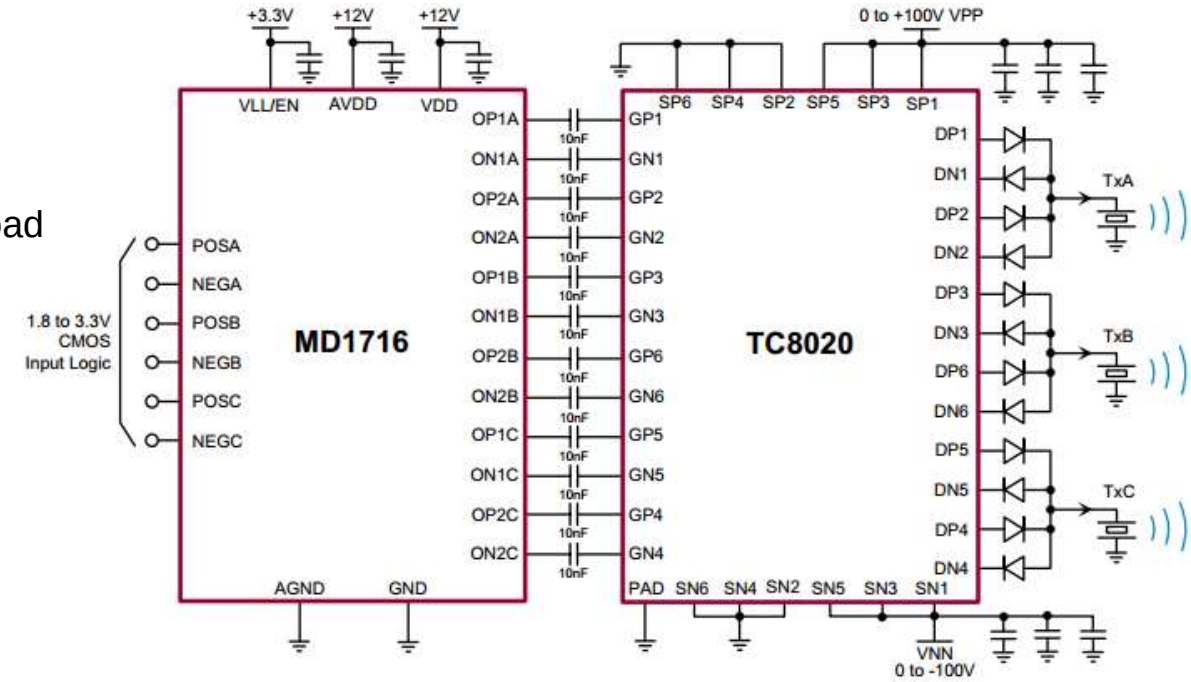

<< BACK

MD2131

Online Datasheet

Features:

- High resolution transmitting waveform
- Up to 3.0A push-pull source-driving current
- 230VP-P maximum output, uses two DN2625 FETs
- Angle vector beamforming I-Q switcher matrix
- 8-bit apodization DAC and 7.5° angular resolution
- Flexible frequency-resolution trade-off
- Programmable aperture windowing
- 250MHz maximum sampling rate
- 25MHz ultrasound maximum frequency
- PWM modulation push-pull current source
- Focusing phase adjustment & chirp waveform
- Fast SPI interface
- 2.5V CMOS logic interface
- +5.0V single power supply
- Low second order harmonic distortions
- Operating Temperature Range: 0°C to +70°C
- Package Option: QFN-40

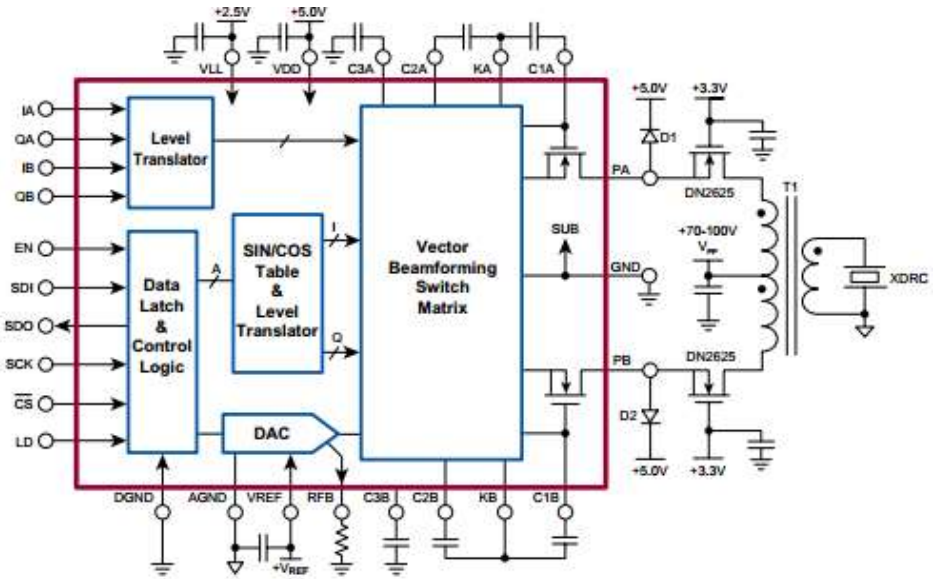

<< BACK

MD2134

Online Datasheet

Features:

- Multiple-level ultrasound pulser
- Fast switching current source for push-pull topology
- 250MHz maximum frequency, 4.0ns input to output delay
- 15 independent programmable output level registers
- Pulse amplitude modulation (PAM) with 8-bit resolution
- 8-bit apodization DAC for peak output current via SPI
- Very low second order harmonic distortion
- Picoseconds time-jitter from input to output
- Fast SPI write and read-back of level & DAC registers
- +5.0V power supply, 2.5V CMOS logic interface
- Drives DN2625 MOSFETs output up to 230VP-P
- Programmable aperture windowing
- Operating Temperature Range:
  0°C to +70°C
- Package Option: QFN-40

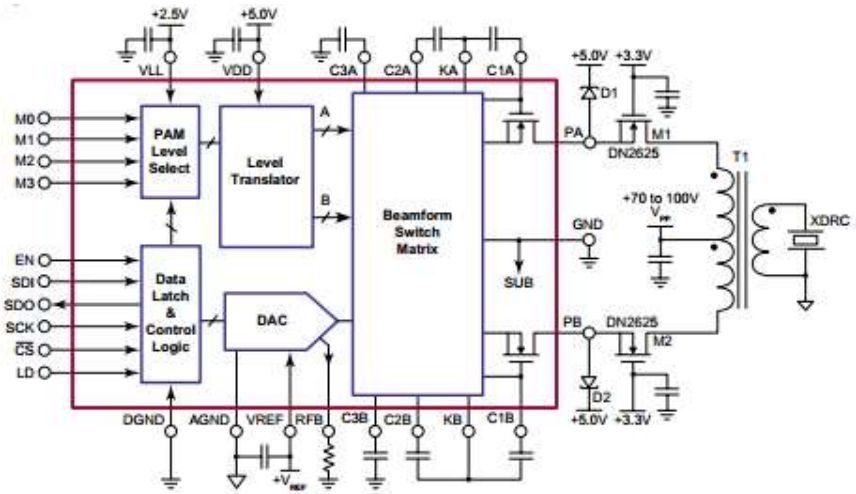

<< BACK

MD1730

Online Datasheet

Features:

- 8-Channel Ultrasound Continuous Waveform (CW) Transmitter with Integrated Beamformer
- CW Output ±1V to ±6V_{p-p} with Low R_{ON}
- -160 dbc/Hz Ultra-Low Phase Noise at 1 kHz Offset and 5 MHz
- 8-bit Programmable Per-Channel Beamforming Phase Delay
- 8-bit Programmable Dividers for CW Frequency with Input Clock Frequency
- Input Clock Compatible with LVDS/SSTL or Single-Ended LVCMOS
- LVCMOS 2.5V Logic for the Control I/O pins
- Fast SPI Interface Supports up to 200 MHz
- SPI Interface Supports Daisy Chaining and Broadcasting Mode

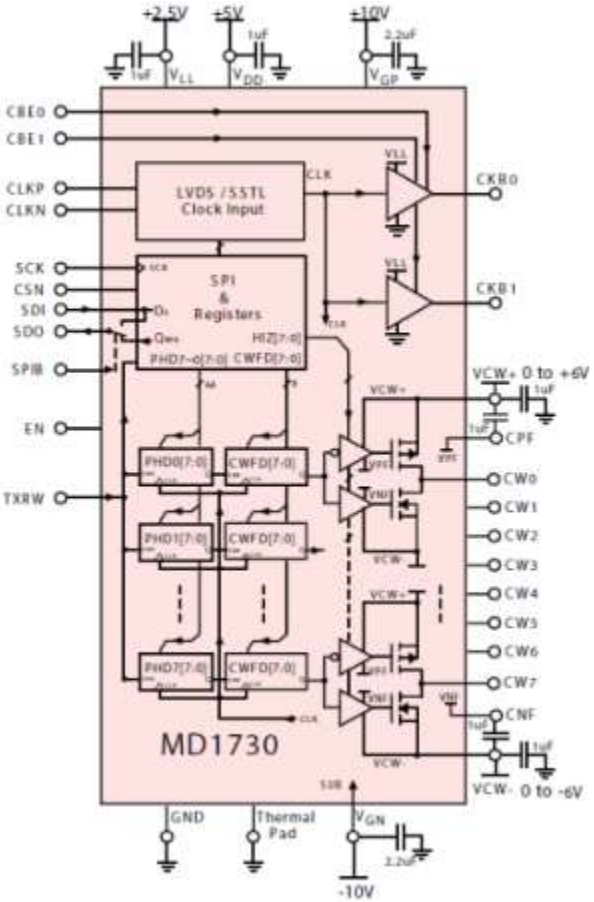

<< BACK

CW01

Online Datasheet

Features:

- Low phase noise
- 100V open drain N-channel
- High speed D flip-flop
- High speed MOSFET gate driver
- Up to 200MHz clock input
- VDD and VLL undervoltage lockout
- Operating Temperature Range: 0°C to +70°C
- Package Option: QFN-24

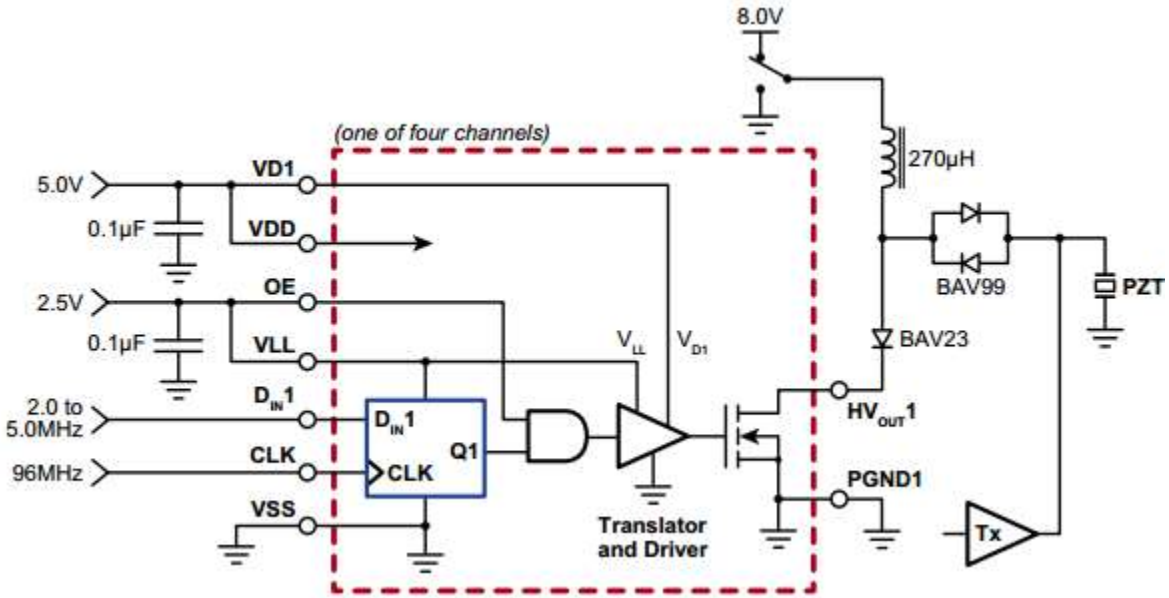

<< BACK

HV7360

Online Datasheet

Features:

- HVCMOS® technology for high performance
- High density integration AC coupled pulser
- 0 to ±100V output voltage
- ±2.5A source and sink minimum pulse current
- Up to 35MHz operating frequency
- 2.0ns matched delay times
- 2.5, 3.3 or 5.0V CMOS logic interface
- Low power consumption and very simple to us
- Operating Temperature Range:
  0°C to +70°C
- Package Option: LFGA-22

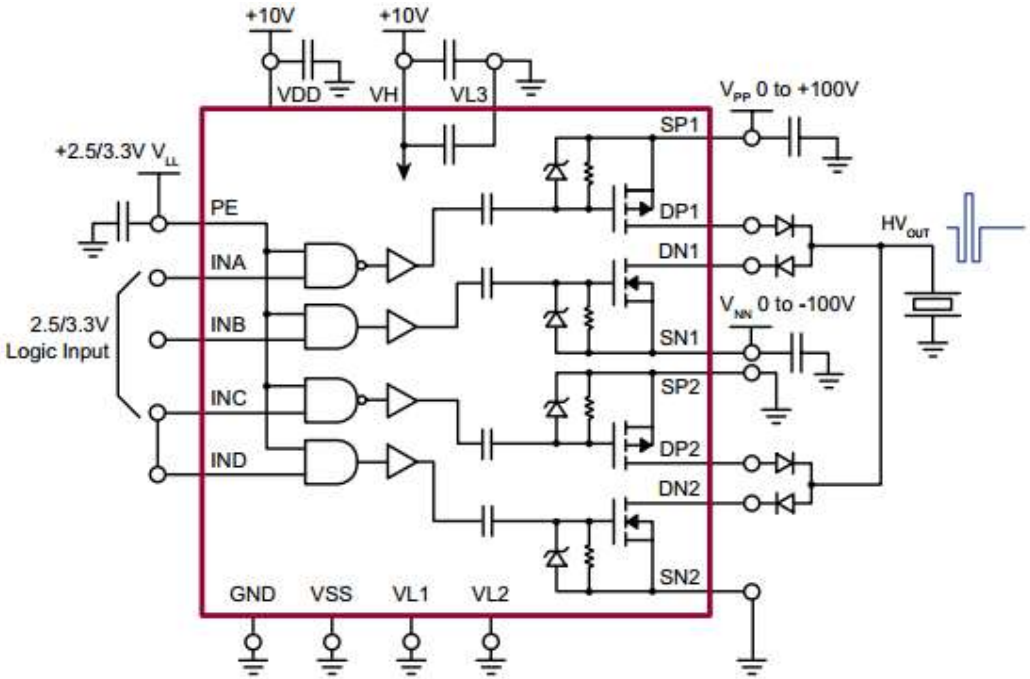

<< BACK

HV7361

Online Datasheet

Features:

- HVCMOS® technology for high performance
- High density integration AC coupled pulser
- 0 to ±100V output voltage
- ±2.5A source and sink minimum pulse current
- Up to 35MHz operating frequency
- 2.0ns matched delay times
- 2.5, 3.3 or 5.0V CMOS logic interface
- Built-in two terminal, low noise T/R switch
- Low power consumption and very simple to use
- Operating Temperature Range:
  0°C to +70°C
- Package Option: LFGA-22

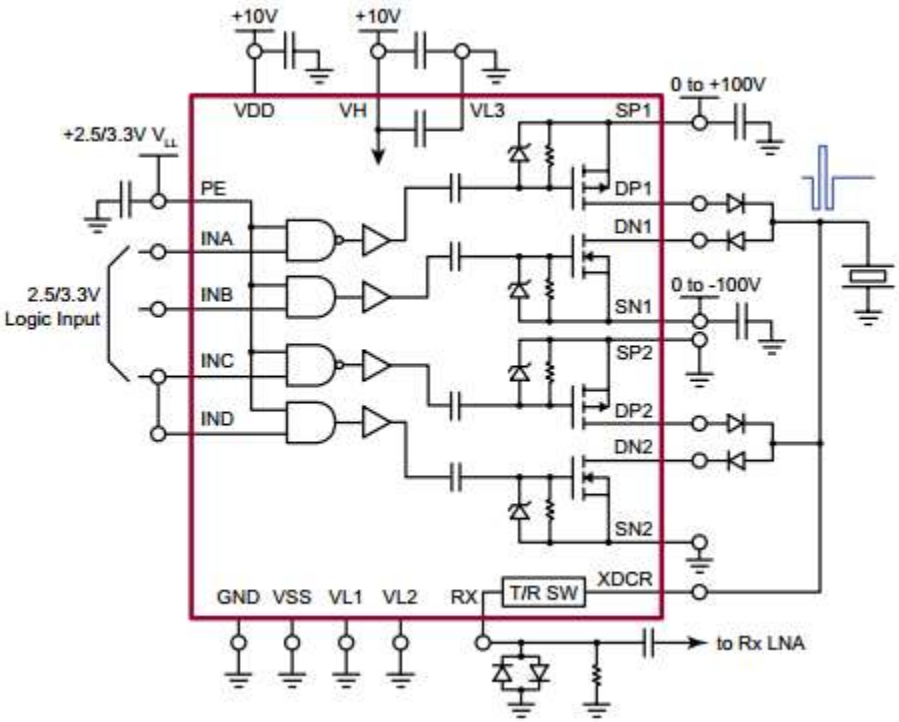

<< BACK

HV748

Online Datasheet

Features:

- HVCMOS technology for high performance
- High density integration ultrasound transmitter
- 0 to ±75V output voltage
- ±1.25A source and sink current in pulse mode
- ±400mA source and sink current in CW mode
- Up to 20MHz operating frequency
- Matched delay times
- 1.2V to 5.0V CMOS logic interface
- Built-in output drain bleed resistors
- Operating Temperature Range:
  0°C to +70°C
- Package Option: QFN-48

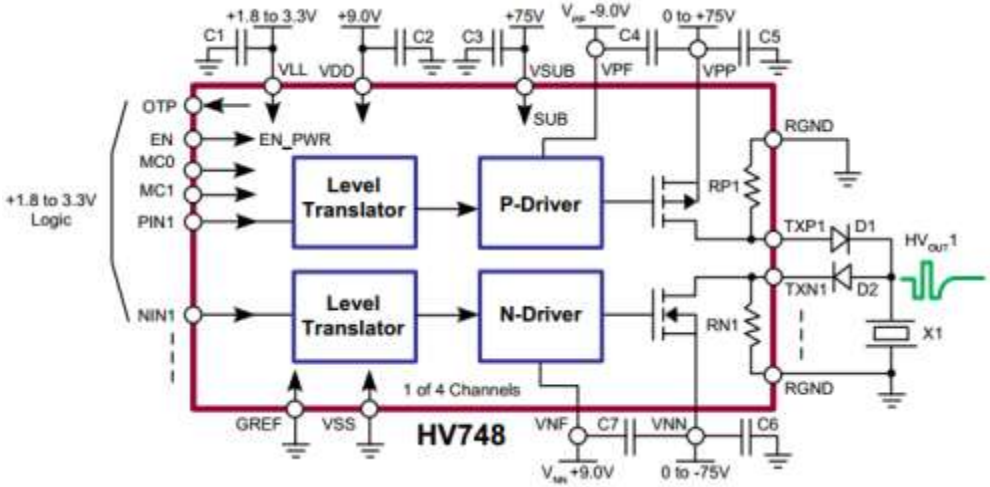

<< BACK

HV7321

Online Datasheet

Features:

- Power sequencing free 5 output levels including RTZ (Return-to-Zero)
- -44 dB single-cycle pulse-inversion second harmonic distortion (HD2) at 5 MHz
- Output voltage up to ±80V
- ±2.5 peak output current
- ±300 mA current from V_{PP1}/V_{NN1} in CW Mode-0
- Integrated T/R switch & RX damper switch
- Bleeder switches achieve true zero during RTZ
- Supports both transparent and re-timing mode
- Re-timing clock frequency supports up to 220 MHz
- Built-in output protection diodes and clamp diodes
- 2.5/3.3V input logic
- Built-in CW switches to pair with external CW transmitters (CW Mode-1)
- 9x9 64-lead VQFN package

Typical application circuit

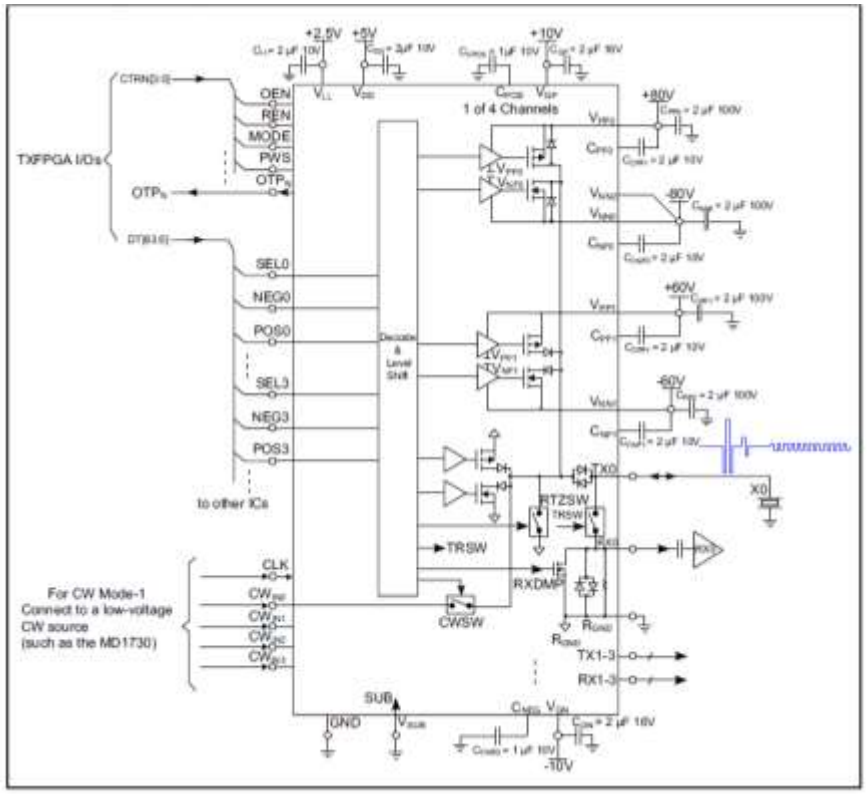

<< BACK

HV7350

Online Datasheet

Features:

- HVCMOS technology for high performance
- High density integrated ultrasound transmitter
- 0 to ±60V output voltage
- ±1.0A source and sink current in pulse mode
- ±1.0A source and sink current in RTZ mode
- Up to 20MHz operating frequency
- Matched delay times
- Optional clock re-alignment
- 3.3V CMOS logic interface and reference
- +3.3V low voltage supply for VDD
- Built-in linear regulators for floating gate driver
- Built-in output drain diodes & bleed resistors
- Operating Temperature Range:
  0°C to +70°C
- Package Option: QFN-56

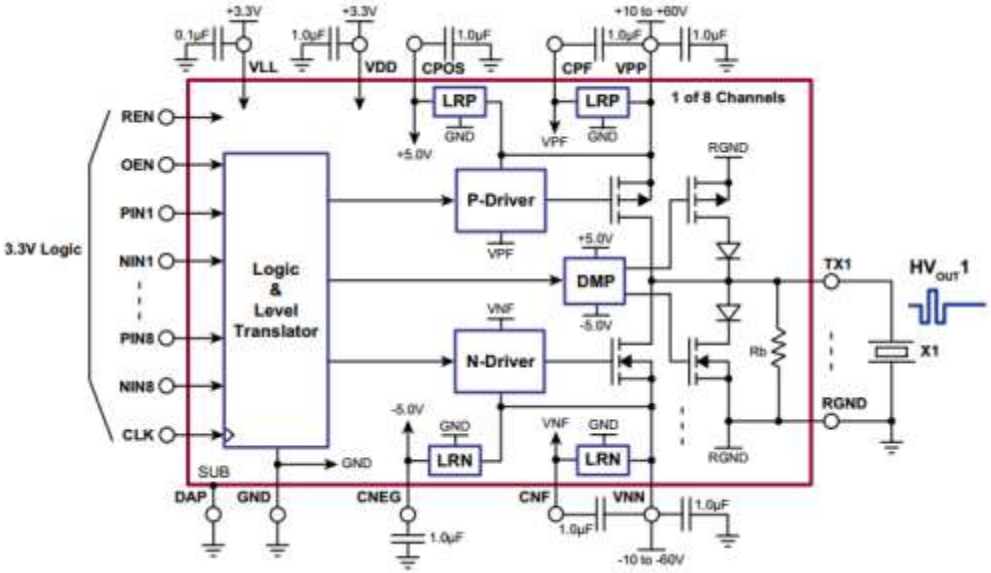

<< BACK

HV7355

Online Datasheet

Features:

- HVCMOS technology for high performance
- High density integrated ultrasound transmitter
- 0 to +150V output voltage
- ±1.5A source and sink current (min.)
- ±300mA current in CW mode
- Up to 18MHz operating frequency
- Matched delay times
- Built-in gate driver floating voltage regulator
- 2.5 to 3.3V CMOS logic interface
- Operating Temperature Range: 0°C to +70°C
- Package Option: QFN-56

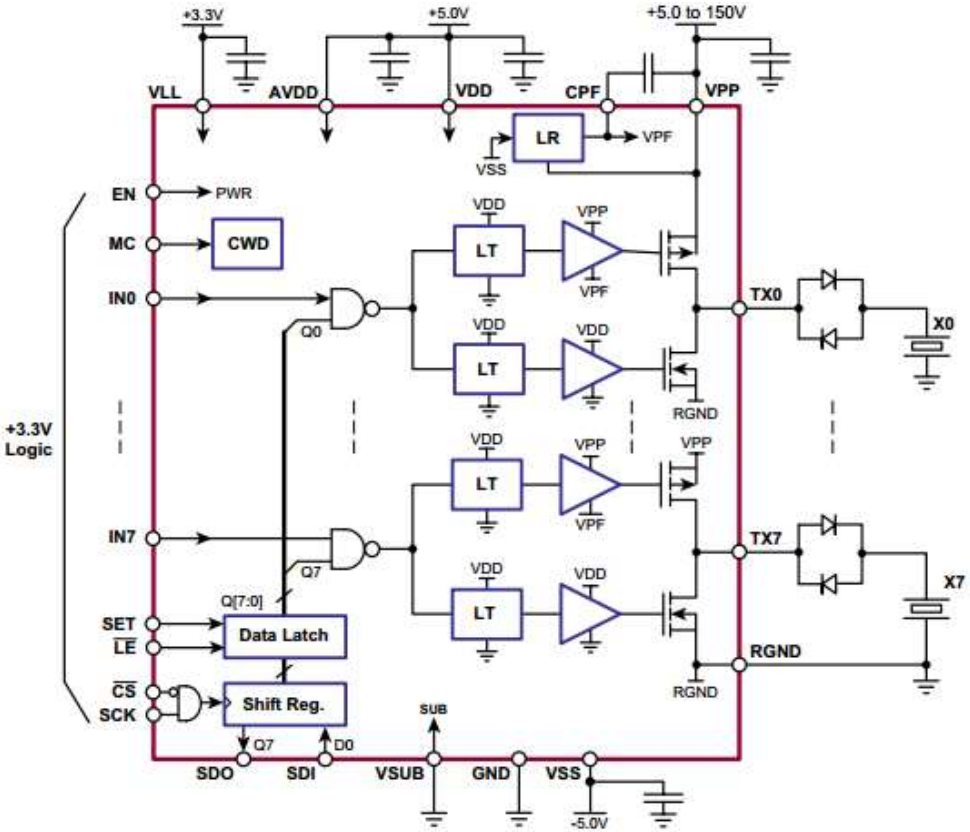

<< BACK

HV7351

Online Datasheet

Features:

- Eight channels with Return to Zero (RTZ)
- Up to +/-70V Output Voltage
- +/-3.0A Output Current
- Built-in digital transmit beamformer
    - Pulse-Echo mode and CW mode
    - Stores up to four 64-bit transmit patterns
    - 6-bit divide by N counter for controlling the transmit frequency
    - 10-bit delay counter for each channel
    - INV pin for inverting the transmit pattern for pulse inversion harmonic imaging
- Differential clock input supports up to 200Mhz
- 80Mhz daisy-chainable SPI interface for fast device programming
- 3.3V CMOS logic interface
- Power-up sequence free
- 11x11 mm QFN-80 package

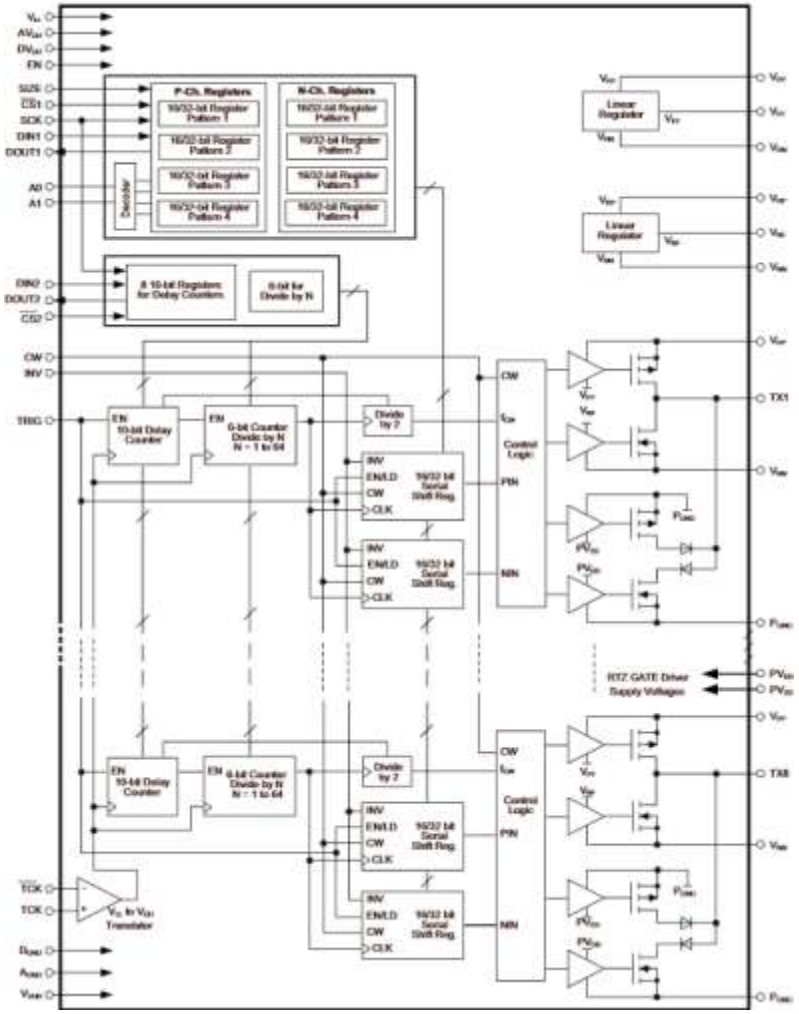

<< BACK

HV20220

Online Datasheet

Features:

- 8 Channel SPST
- 5.0V to 12.0V CMOS logic compatibility
- 5Mhz data shift clock frequency
- HVCMOS® technology for high performance
- Very low quiescent power dissipation (-10µA)
- Output on-resistance typically 22Ω
- Low parasitic capacitances
- DC to 50MHz small signal frequency response
- -60dB typical output off isolation at 5.0MHz
- CMOS logic circuitry for low power
- Excellent noise immunity
- On-chip shift register, latch and clear logic circuitry
- Flexible high voltage supplies
- Operating Temperature Range: 0°C to +70°C
- Package Option: LQFP-48, PLCC-28

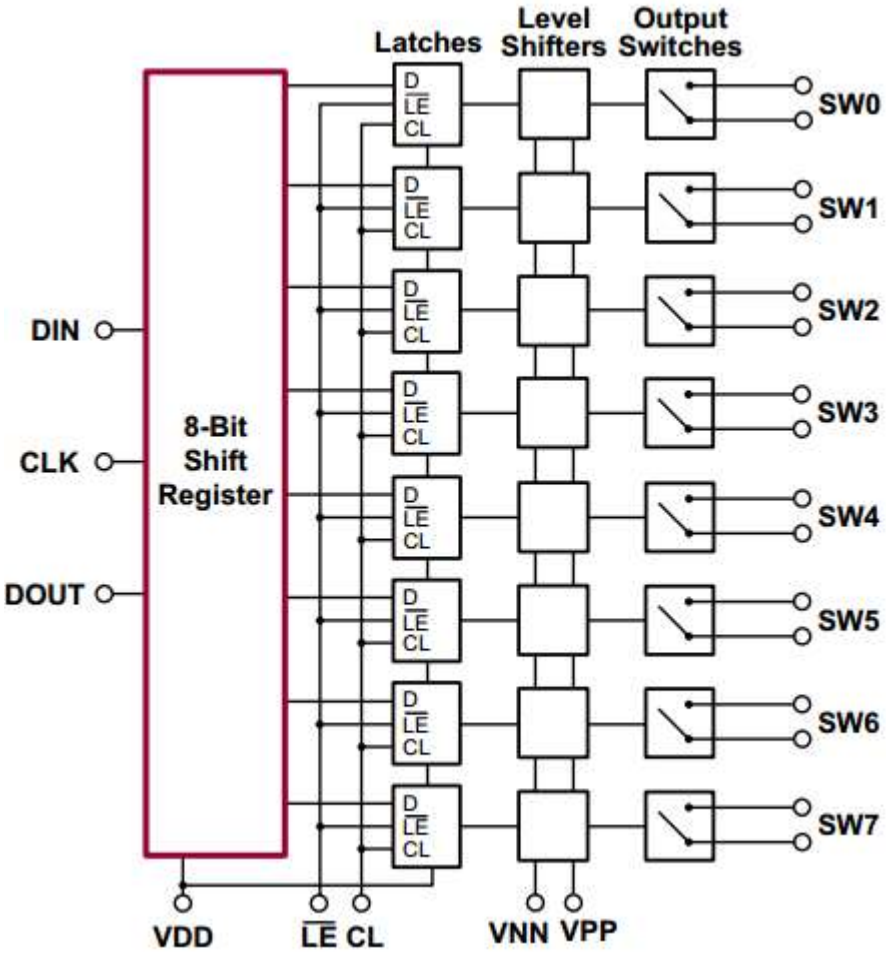

<< BACK

HV20320

Online Datasheet

Features:

- 8 Channel SPST
- 5.0V to 12.0V CMOS logic compatibility
- 5Mhz data shift clock frequency
- HVCMOS® technology for high performance
- Very low quiescent power dissipation (-10µA)
- Output on-resistance typically 22Ω
- Low parasitic capacitances
- DC to 50MHz small signal frequency response
- -60dB typical output off isolation at 5.0MHz
- CMOS logic circuitry for low power
- Excellent noise immunity
- On-chip shift register, latch and clear logic circuitry
- Flexible high voltage supplies
- Operating Temperature Range: 0°C to +70°C
- Package Option: PLCC-28

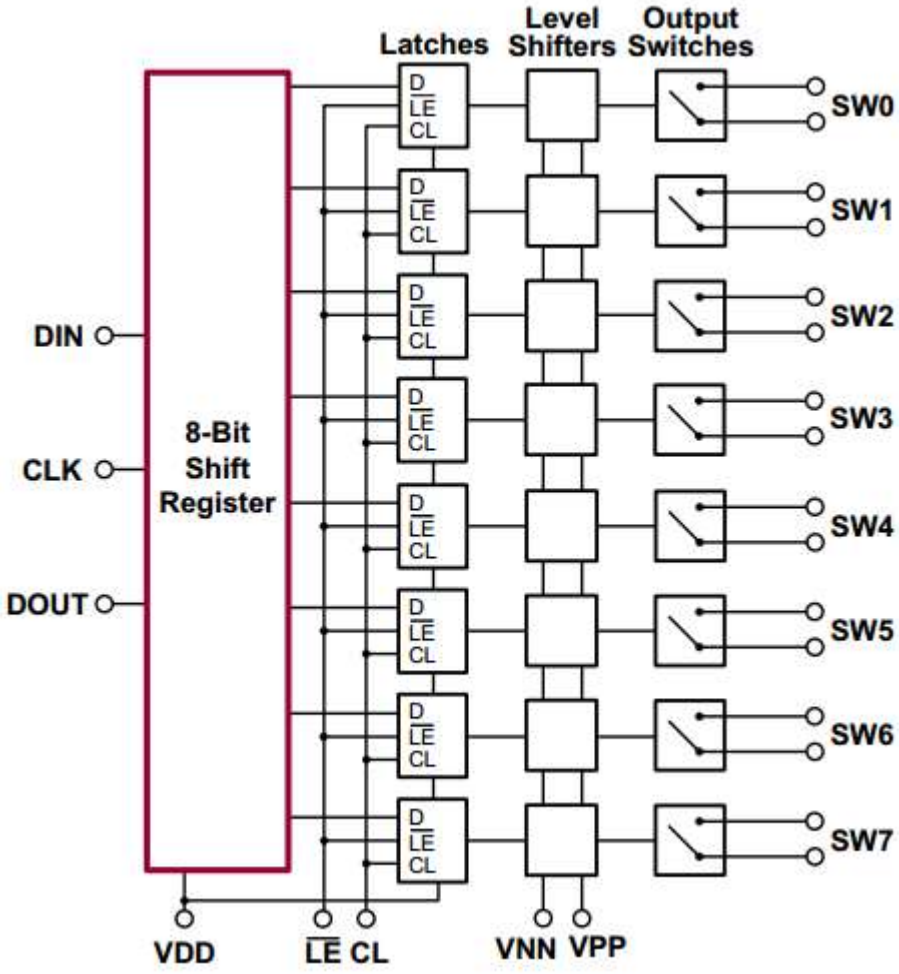

<< BACK

HV20822

Online Datasheet

Features:

- HVCMOS® technology for high performance
- **Two Banks of 8 x SPST Configuration**
- Support bank switching
- 220V operating conditions
- Output on-resistance typically 22Ω
- 5.0 and 12.0V CMOS logic compatibility
- Very low quiescent current consumption (-10µA)
- -45dB min off isolation at 7.5MHz
- Low parasitic capacitance
- Excellent noise immunity
- Flexible high voltage supplies
- Operating Temperature Range: 0°C to +70°C
- Package Option: LQFP-48

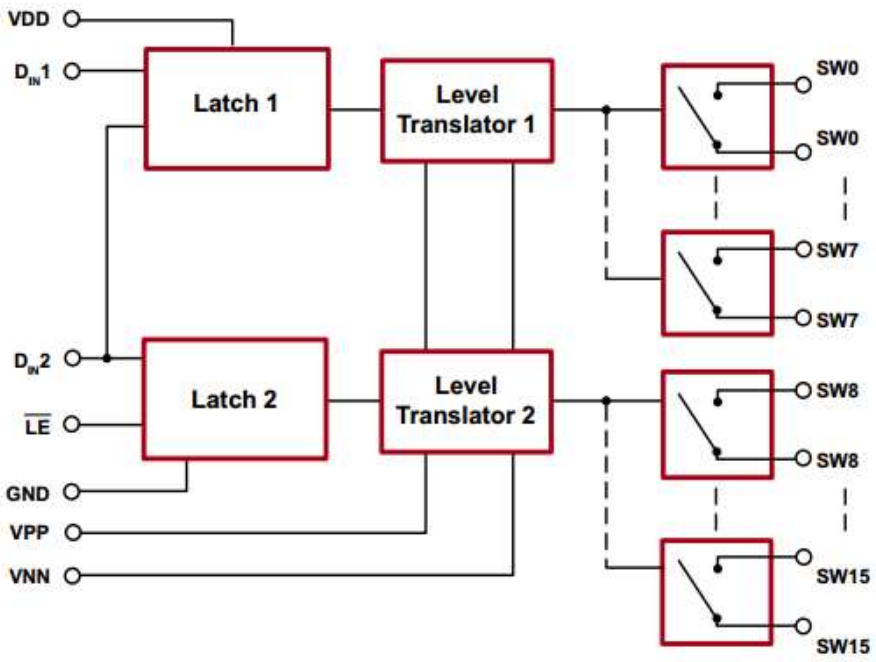

<< BACK

HV209

Online Datasheet

Features:

- 6 x 2:1 Mux Configuration
- 5Mhz data shift clock frequency
- HVCMOS® technology for high performance
- Operating voltage of up to 200V
- Output on-resistance typically 22Ω
- Integrated bleed resistors on the outputs
- 5.0V to 12.0V CMOS logic compatibility
- Very low quiescent current consumption
- -58dB typical off isolation at 5.0MHz
- Low parasitic capacitance
- Excellent noise immunity
- Flexible high voltage supplies
- Operating Temperature Range: 0°C to +70°C
- Package Option: LQFP-48

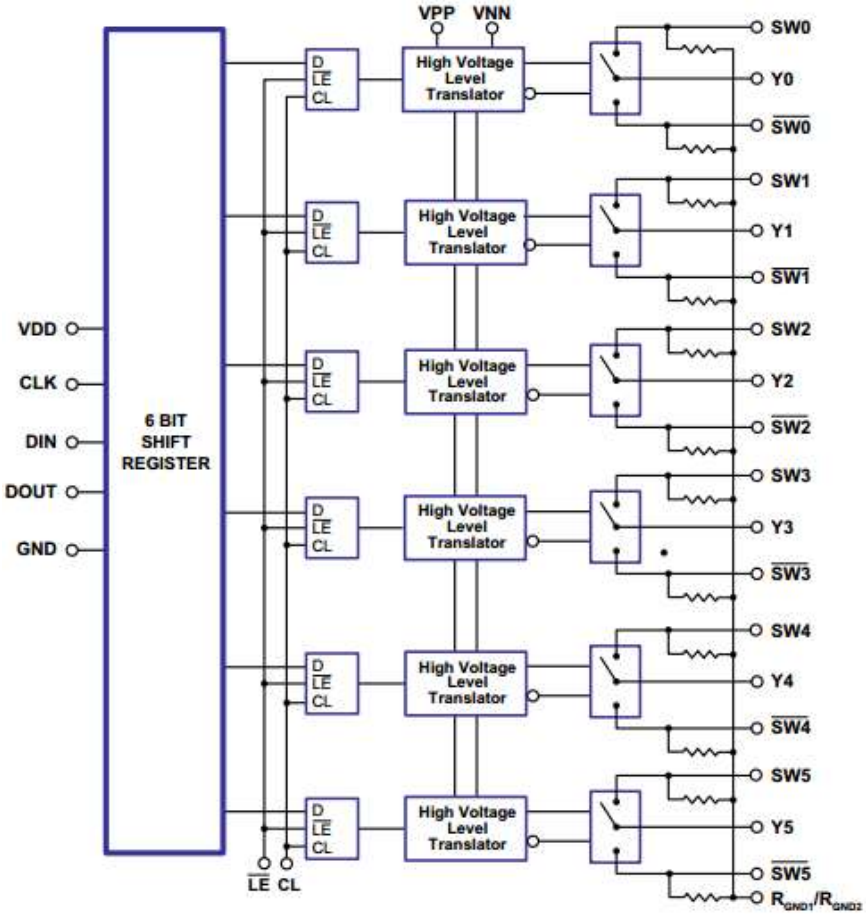

<< BACK

HV219

Online Datasheet

Features:

- 8 Channel SPST
- 5.0V to 12.0V CMOS logic compatibility
- 5Mhz data shift clock frequency
- HVCMOS® technology for high performance
- Very low quiescent power dissipation
- **Output on-resistance typically 11Ω**
- Low parasitic capacitance
- DC to 50MHz small signal frequency response
- -60dB typical off-isolation at 5.0MHz
- CMOS logic circuitry for low power
- Excellent noise immunity
- Serial shift register logic control with latches
- Flexible operating supply voltages
- Surface mount packages
- Operating Temperature Range: 0°C to +70°C
- Package Option: LQFP-48, PLCC-28

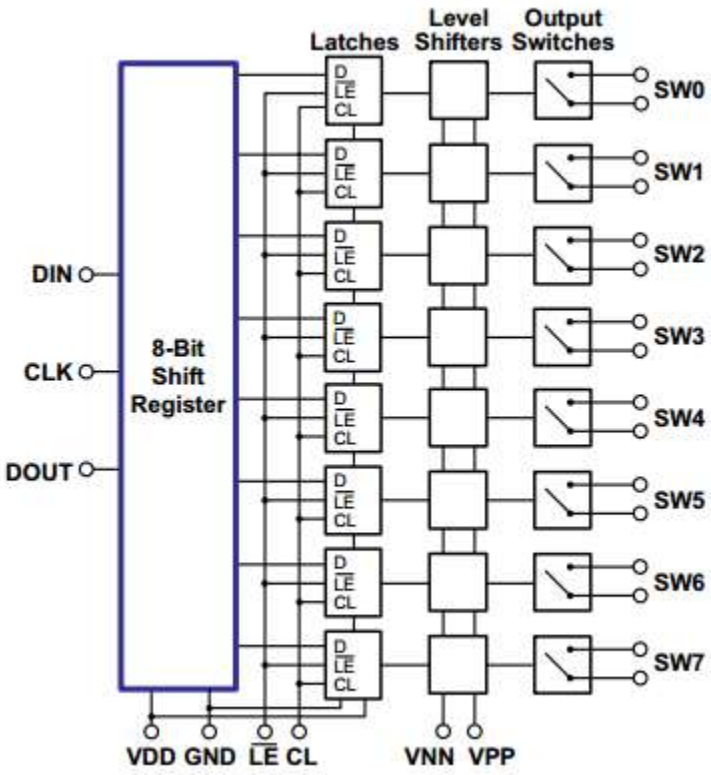

<< BACK

HV2201 / HV2301

Online Datasheet

Features:

- 8 Channel SPST
- HV2201 without bleed resistors
- HV2301 with integrated bleed resistors
- HVCMOS technology for high performance
- 8 Channels of high voltage analog switch
- **3.3 or 5.0V CMOS input logic level**
- **20MHz data shift clock frequency**
- Very low quiescent power dissipation
- Low parasitic capacitance
- DC to 50MHz analog signal frequency
- -60dB typical off-isolation at 5MHz
- CMOS logic circuitry for low power
- Excellent noise immunity
- Cascadable serial data register with latches
- Flexible operating supply voltages
- Operating Temperature Range:
  0°C to +70°C
- Package Option: LQFP-48, PLCC-28

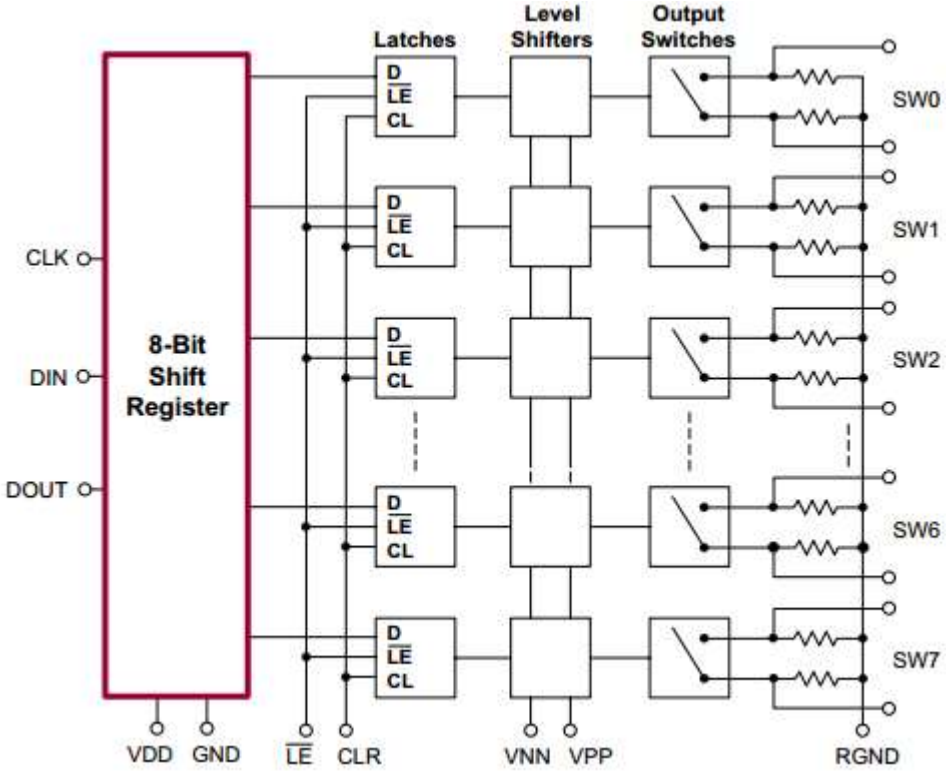

<< BACK

HV2221 / HV2321

Online Datasheet

Features:

- **Unipolar with Negative High Voltage**
- 8 Channel SPST
- Low Charge Injection
- HV2221 without bleed resistors
- HV2321 with bleed resistors
- Low on-resistance, 15Ω max.
- HVCMOS technology for high performance
- 3.3 or 5.0V CMOS input logic level
- 20MHz data shift clock frequency
- Very low quiescent power dissipation
- Low parasitic capacitance
- DC to 50MHz small signal frequency respon
- -60dB typical off-isolation at 5MHz
- CMOS logic circuitry for low power
- Excellent noise immunity
- Cascadable serial data register with latches
- Flexible operating supply voltages
- Temperature Range: 0°C to +70°C
- Package: LQFP-48

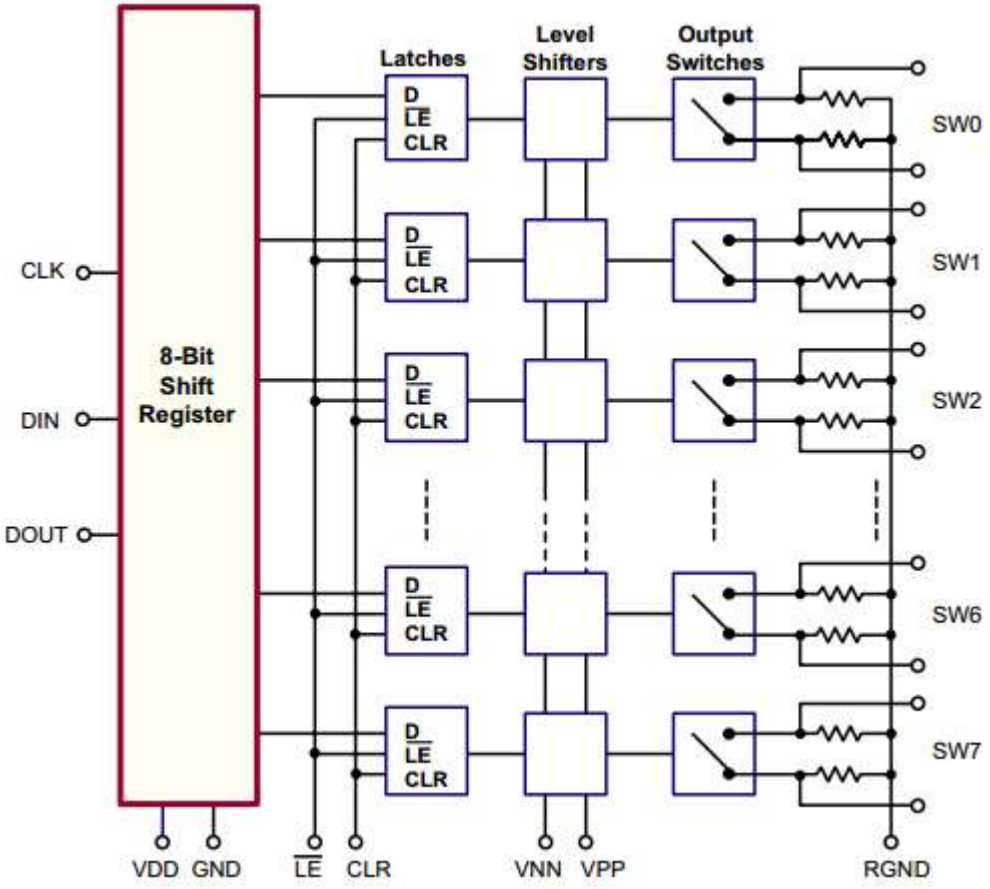

<< BACK

HV232

Online Datasheet

Features:

- 8 Channel SPST
- HVCMOS® technology for high performance
- Very low quiescent power dissipation (10µA max.)
- Output on-resistance (22Ω typ.)
- Integrated bleed resistors on the outputs
- Low parasitic capacitances
- DC to 50MHz small signal frequency response
- -60dB typical output off isolation at 5.0MHz
- CMOS logic circuitry for low power
- Excellent noise immunity
- 5.0V to 12.0V CMOS logic compatibility
- 5Mhz data shift clock frequency
- On-chip shift register, latch and clear logic circuitry
- Flexible high voltage supplies
- Temperature Range: 0°C to +70°C
- Package : LQFP-48, PLCC-28

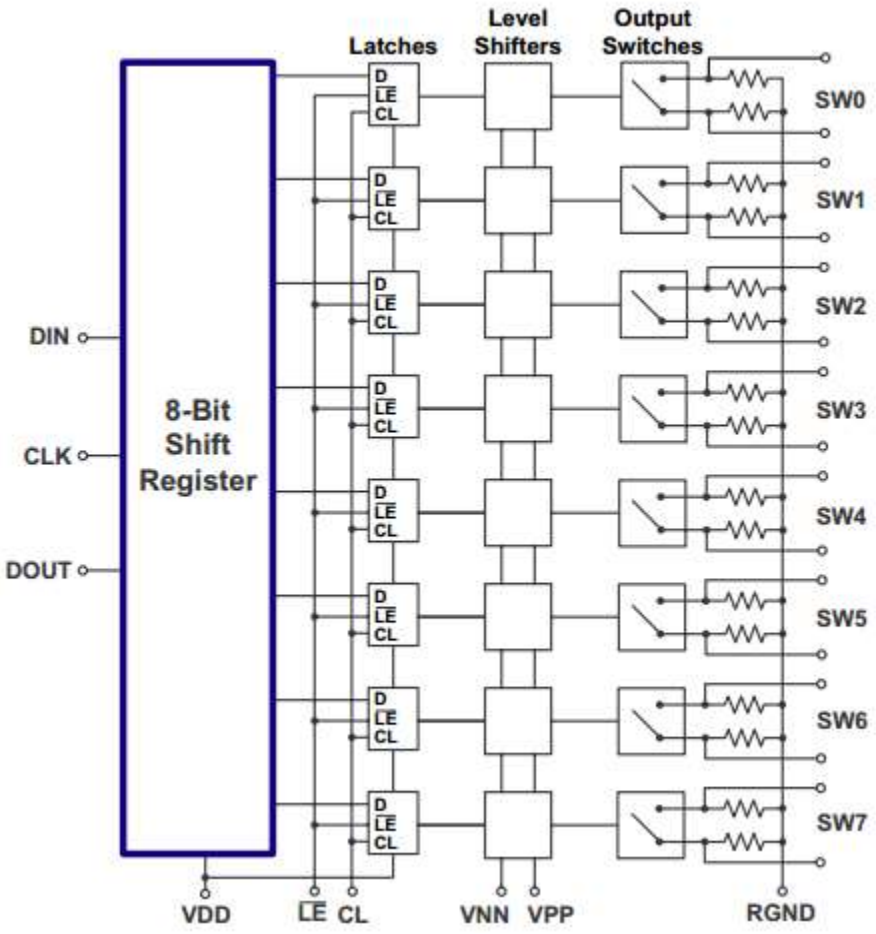

<< BACK

HV238

Online Datasheet

Features:

- HVCMOS® technology for high performance
- **Two Banks of 8 x SPST configuration**
- Support bank switching
- 220V operating conditions
- Output on-resistance typically 22Ω
- Integrated bleed resistors on the outputs
- 5.0 and 12.0V CMOS logic compatibility
- Very low quiescent power dissipation (-10µA)
- -45dB min off isolation at 7.5MHz
- Low parasitic capacitance
- Excellent noise immunity
- Flexible operating supply voltages
- Operating Temperature Range: 0°C to +70°C
- Package Option: LQFP-48

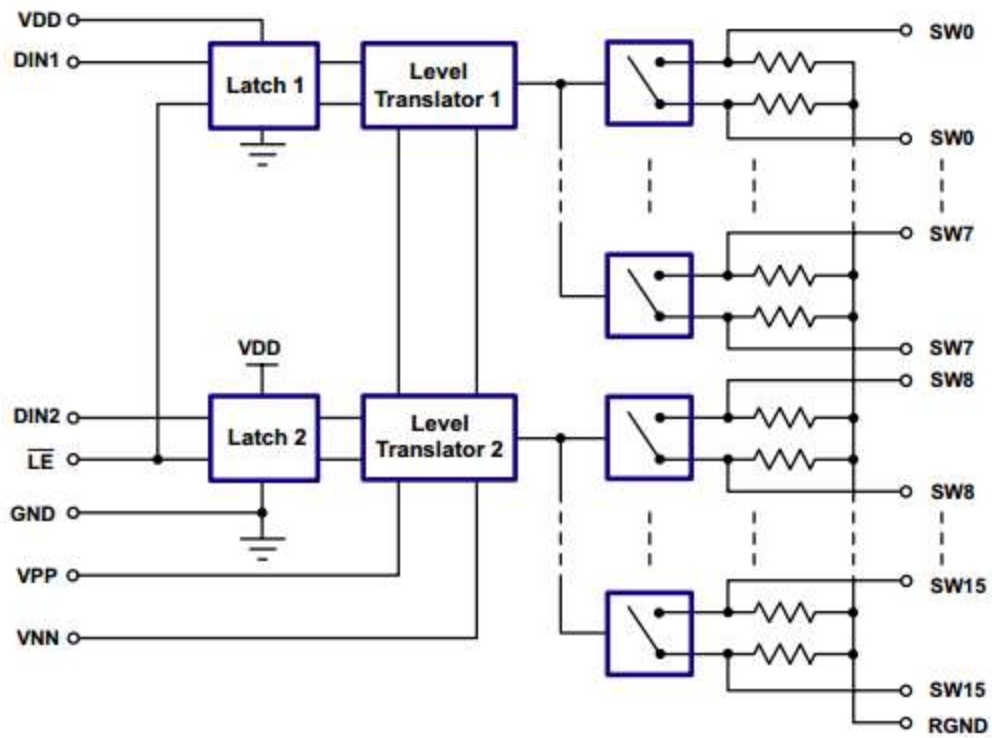

<< BACK

HV2601 / HV2701

Online Datasheet

Features:

- 16-channel SPST high voltage analog switch
- HV2601 without bleed resistors
- HV2701 with bleed resistors
- HVCMOS technology for high performance
- Integrated bleed resistors on the outputs
- 3.3V and 5V input logic level compatible
- 20MHz data shift clock frequency
- Very low quiescent power dissipation (-10µA)
- Low parasitic capacitance
- DC to 50MHz small signal frequency response
- -60dB typical OFF-isolation at 5.0MHz
- CMOS logic circuitry for low power
- Excellent noise immunity
- Cascadable serial data register with latches
- Flexible operating supply voltages
- Temperature Range: 0°C to +70°C
- Package: LQFP-48, Bumped Die

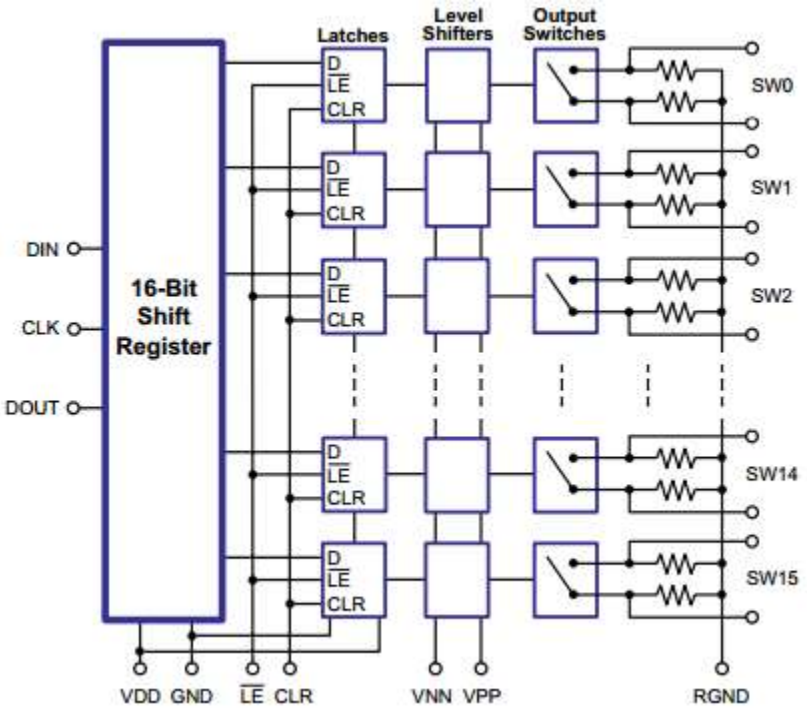

<< BACK

HV2605 / HV2705

Online Datasheet

Features:

- 16-channel SPST high voltage analog switch
- **Low Harmonic Distortion: Csg on/off = 13/10p**
- HV2605 is without bleed resistors
- HV2705 is with bleed resistors
- HVCMOS technology for high performance
- Integrated bleed resistors on the outputs
- 3.3V and 5V input logic level compatible
- 20MHz data shift clock frequency
- Very low quiescent power dissipation (-10µA)
- Low parasitic capacitance
- DC to 50MHz small signal frequency response
- -60dB typical off-isolation at 5.0MHz
- CMOS logic circuitry for low power
- Low harmonic distortion
- Cascadable serial data register with latches
- Flexible operating supply voltages
- Temperature Range: 0°C to +70°C
- Package: LQFP-48, Bumped Die

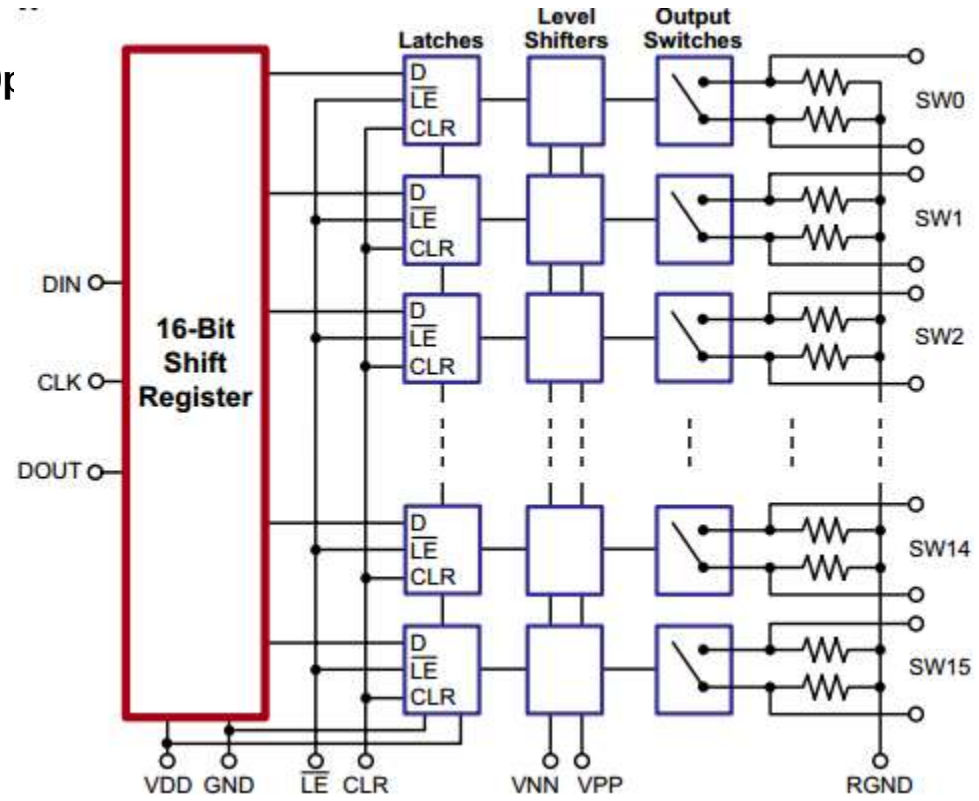

<< BACK

HV2631 / HV2731

Online Datasheet

Features:

- **Two Banks of 8 x SPST configuration**
- Support bank switching
- HV2631 without bleed resistors
- HV2731 with bleed resistors
- HVCMOS® technology for high performance
- 220V operating conditions
- 22Ω typical output on-resistance
- Integrated bleed resistors on the outputs
- 3.3V and 5.0V CMOS logic compatibility
- Very low quiescent power dissipation (-10µA)
- -45dB min off isolation at 7.5MHz
- Low parasitic capacitance
- Excellent noise immunity
- Flexible operating supply voltages
- 48-lead LQFP package
- Temperature Range: 0°C to +70°C
- Package: LQFP-48

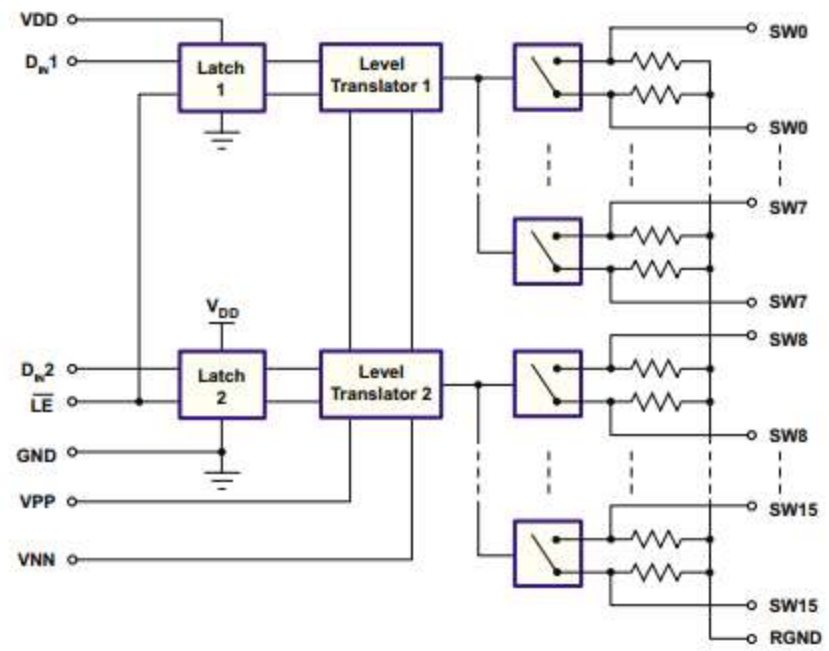

<< BACK

HV2661 / HV2761

Online Datasheet

Features:

- HV2661 without bleed resistors
- HV2761 with bleed resistors
- 24-channel high voltage analog switch
- Integrated bleed resistors on the outputs
- 3.3 or 5.0V CMOS input logic level
- 3:1 MUX-deMUX with 8 states
- 20MHz data shift clock frequency
- HVCMOS technology for high performance
- Very low quiescent power dissipation,10µA
- Low parasitic capacitance
- DC to 50MHz analog signal frequency
- -60dB typical OFF-isolation at 5.0MHz
- CMOS logic circuitry for low power
- Excellent noise immunity
- Cascadable serial data register with latches
- Flexible operating supply voltages
- Temperature Range: 0°C to +70°C
- Package: LQFP-48

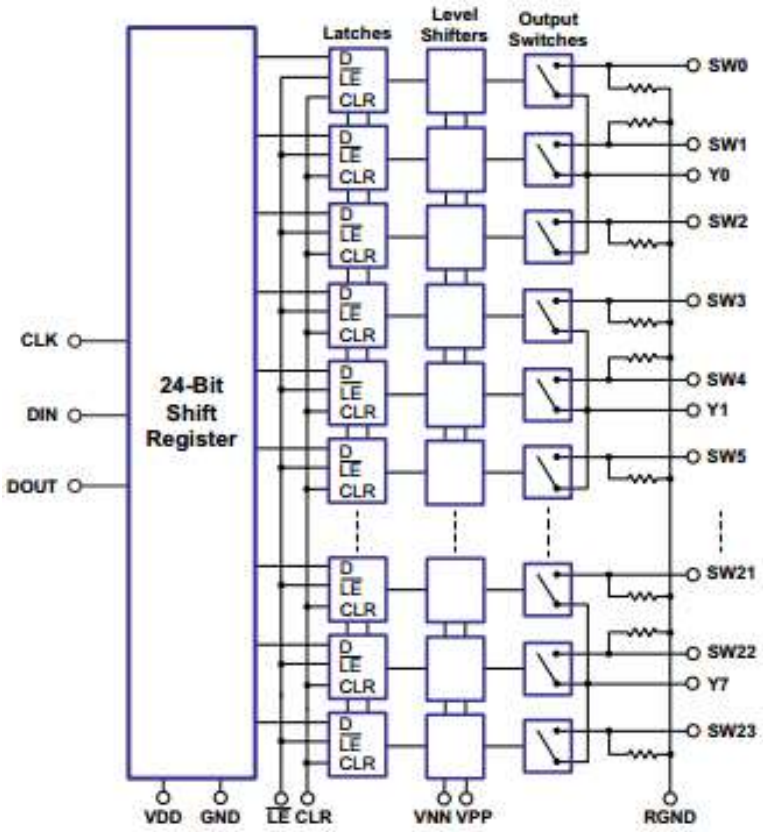

<< BACK

HV2662 / HV2762

Online Datasheet

Features:

- 24 Channel SPST configuration
- Low Harmonic Distortion
- Csg on/off = 12/9 pF
- HV2662 without bleed resistors
- HV2762 with bleed resistors
- 3.3 or 5.0V CMOS input logic level
- 20MHz data shift clock frequency
- HVCMOS technology for high performance
- Very low quiescent power dissipation - (10µA)
- DC to 50MHz analog signal frequency
- -60dB typical OFF-isolation at 5.0MHz
- CMOS logic circuitry for low power
- Excellent noise immunity
- Cascadable serial data register with latches
- Flexible operating supply voltages
- Temperature Range: 0°C to +70°C
- Package : LFGA-64

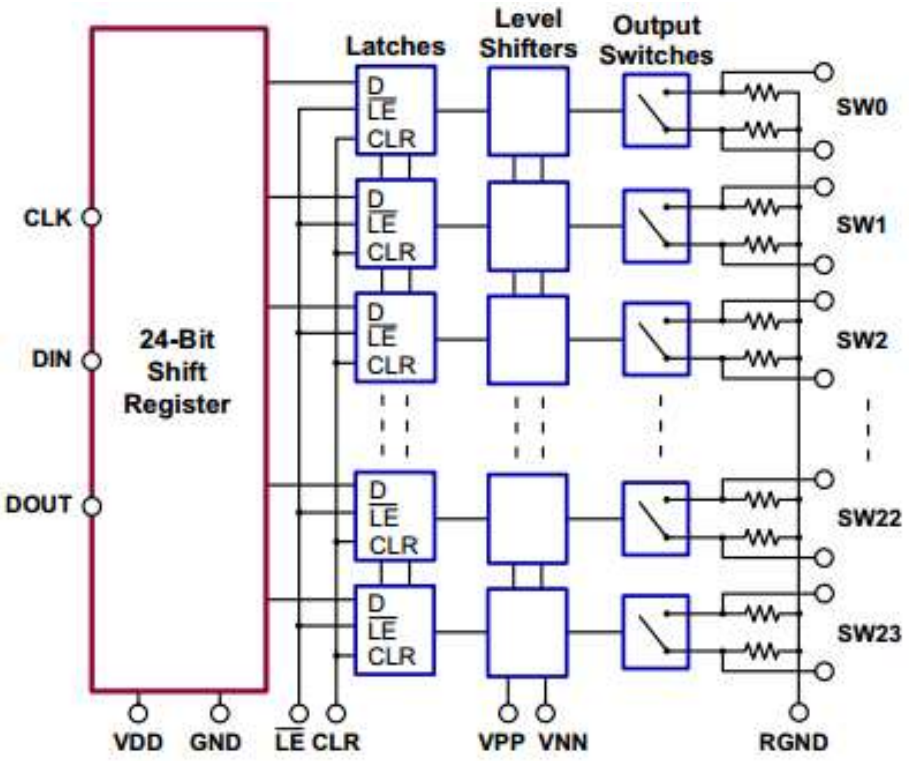

<< BACK

HV2733

Online Datasheet

Features:

- 8 x SPDT Configuration
- Low harmonic distortion
- Integrated bleed resistors on the outputs
- 3.3 and 5.5V CMOS input logic level
- 20MHz data shift clock frequency
- HVCMOS technology for high performance
- Very low quiescent power dissipation (-10µA)
- Low parasitic capacitance
- DC to 50MHz small signal frequency response
- CMOS logic circuitry for low power
- Excellent noise immunity
- Cascadable serial data register with latches
- Flexible operating supply voltages
- Temperature Range: 0°C to +70°C
- Package: LQFP-48

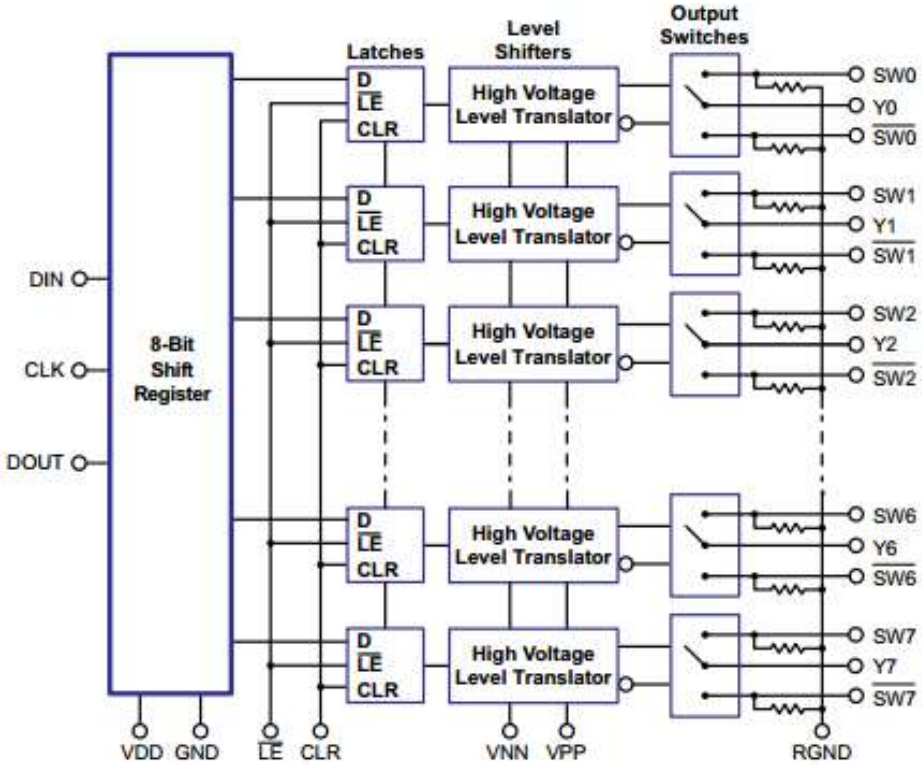

<< BACK

HV2801 / HV2901

Online Datasheet

Features:

- 16 x 2:1 Mux configuration
- HV2801 without bleed resistors
- HV2901 with bleed resistors
- 3.3V or 5.0V CMOS input logic level
- 20MHz data shift clock frequency
- HVCMOS technology for high performance
- Very low quiescent power dissipation -10µA
- Low parasitic capacitance
- DC to 50MHz analog signal frequency
- -60dB typical OFF-isolation at 5.0MHz
- CMOS logic circuitry for low power
- Excellent noise immunity
- Cascadable serial data register with latches
- Flexible operating supply voltages
- Temperature Range: 0°C to +70°C
- Package: QFN-64

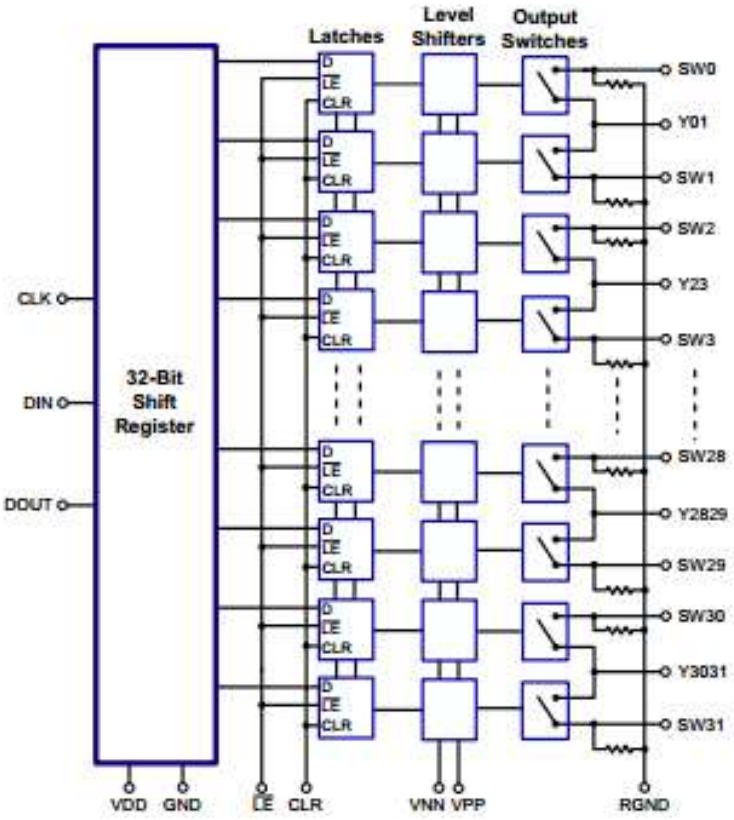

<< BACK

HV2802 / HV2902

Online Datasheet

Key Features:

- 32-Channel SPST high voltage analog switch
- Low Harmonic Distortion
- Cgs on/off = 13/10 pF
- +/-100V Analog Signal Voltage Range
- 20Mhz data shift clock frequency
- Integrated 35KΩ bleeder resistors (HV2902 only)
- -60dB off isolation
- 22Ω on-resistance
- 3.0A peak analog signal current per channel
- DC to 50Mhz analog signal bandwidth
- Low parasitic capacitance
- CMOS logic circuitry for low power
- Package: 78-Ball BGA 9x9 mm

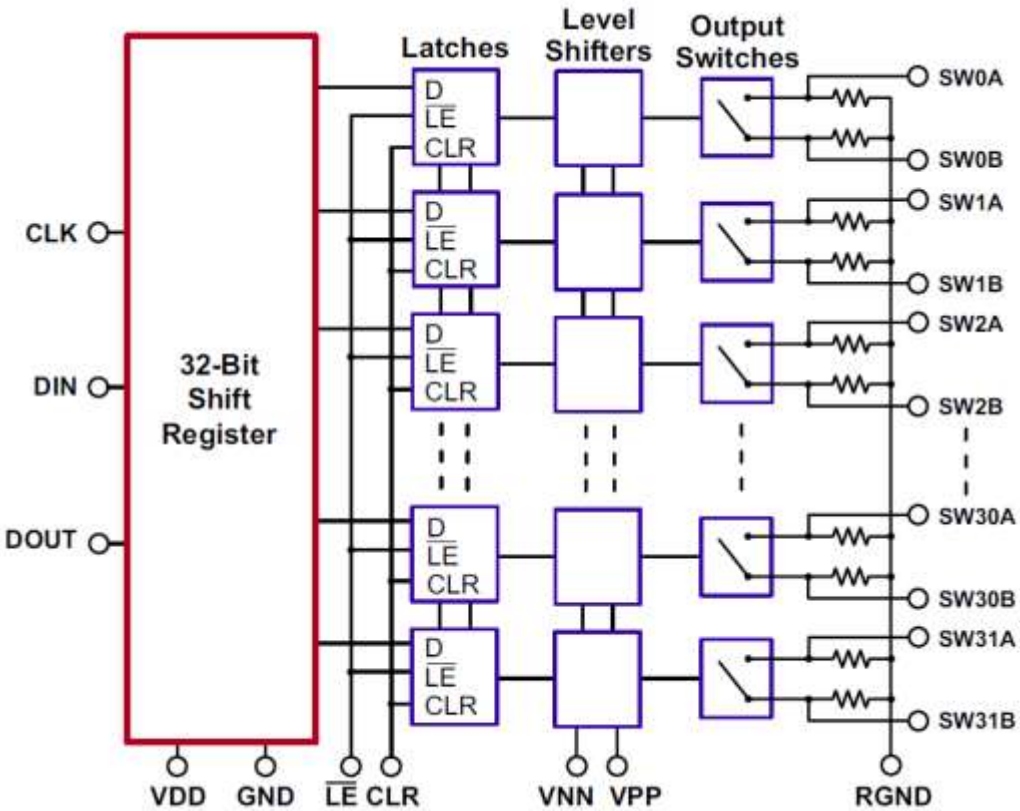

<< BACK

HV2808

Online Datasheet

Features:

- Two Banks of 16 SPST configuration
- Support bank switching
- 3.3 or 5.0V CMOS input logic level
- HVCMOS technology for high performance
- Very low quiescent power dissipation -10µA
- Low parasitic capacitance
- DC to 50MHz analog signal frequency
- -60dB typical OFF-isolation at 5.0MHz
- CMOS logic circuitry for low power
- Excellent noise immunity
- Flexible operating supply voltages
- Temperature Range: 0°C to +70°C
- Package: QFN-56
- Ideal for ultrasound probe slot multiplexing

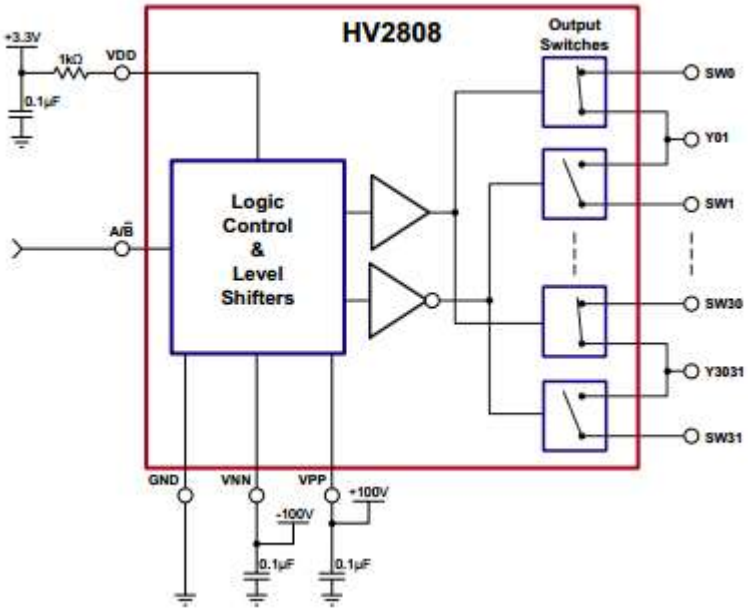

<< BACK

HV2809

Online Datasheet

Features:

- Two banks of 16 SPST configuration
- Support bank switching
- Enable control for all-OFF state
- 3.3 or 5.0V CMOS input logic level
- HVCMOS technology for high performance
- Very low quiescent power dissipation, 10µA
- Low parasitic capacitance
- DC to 50MHz analog signal frequency
- -60dB typical OFF-isolation at 5.0MHz
- CMOS logic circuitry for low power
- Excellent noise immunity
- Flexible operating supply voltages
- Temperature Range: 0°C to +70°C
- Package: QFN-56
- Ideal for ultrasound probe slot multiplexing

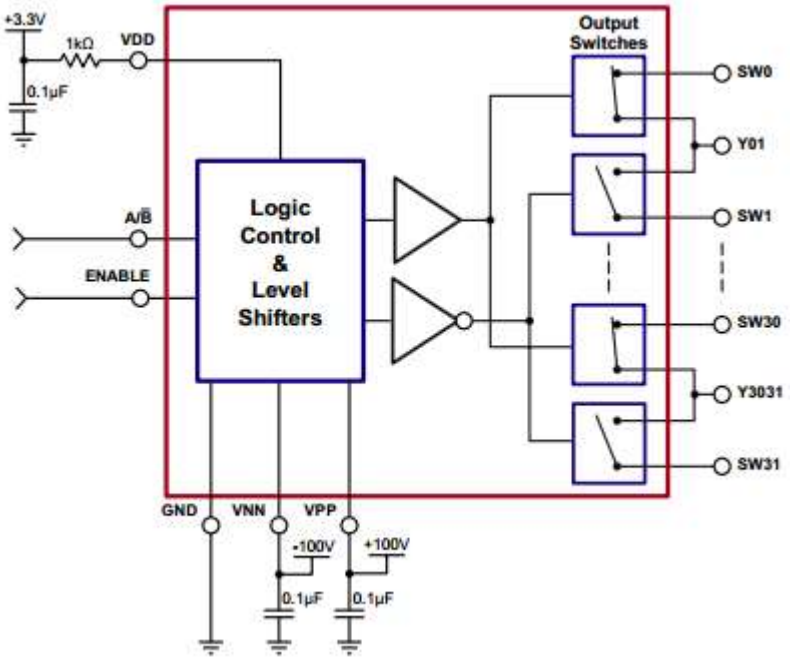

<< BACK

FP0100

Online Datasheet

Features:

- Up to 100V input voltage protection
- Low on resistance – 4.0Ω typical
- Fast switching speed
- No external supplies needed
- Operating Temperature Range: -40°C to +125°C
- Package Option: SOT-89

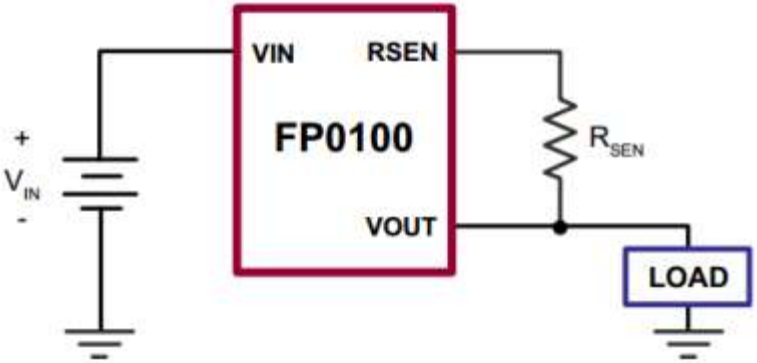

<< BACK

HV7800

Online Datasheet

Features:

- Supply voltage 8.0 to 450V
- Voltage output device
- Typical gain 1.0 ±1%
- Max VSENSE 500mV
- Fast rise and fall times, 700ns to 2.0µs
- Maximum quiescent current 50µA
- Operating Temperature Range: -40°C to +125°C
- Package Option: 5L SOT-23

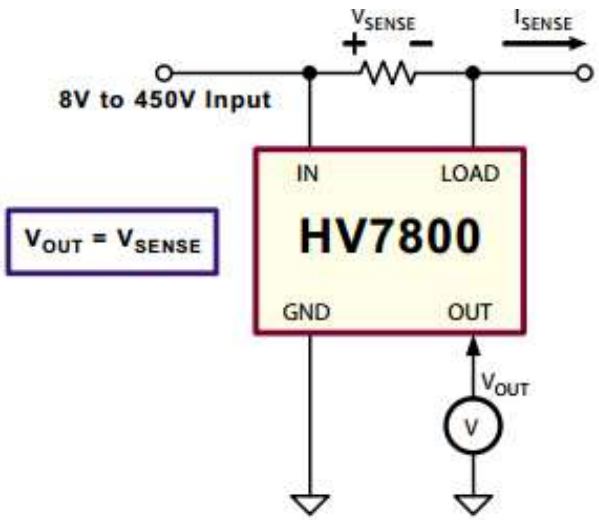

<< BACK

HV7801

Online Datasheet

Features:

- Supply voltage 8.0 to 450V
- Voltage output device
- Typical gain 5.0 ±1%
- Max VSENSE 500mV
- Fast rise and fall times, 700ns to 2.0µs
- Maximum quiescent current 50µA
- Operating Temperature Range: -40°C to +125°C
- Package Option: 5L SOT-23

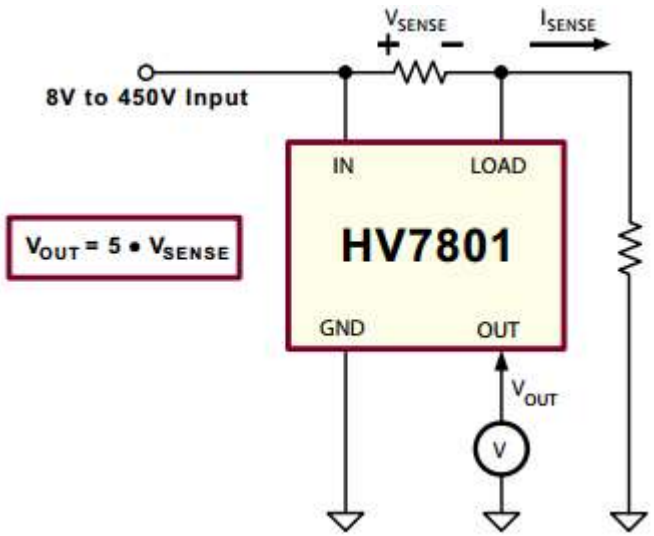

<< BACK

HV7802

Online Datasheet

Features:

- Supply voltage 8V to 450V
- Configurable as a current or voltage output device
- Maximum sense amplifier offset of 15mV
- Max VSENSE of 500mV
- Fast rise and fall times, from 700ns to 2.0µs
- Maximum quiescent current of 50µA
- Operating Temperature Range: -40°C to +125°C
- Package Option: MSOP-8

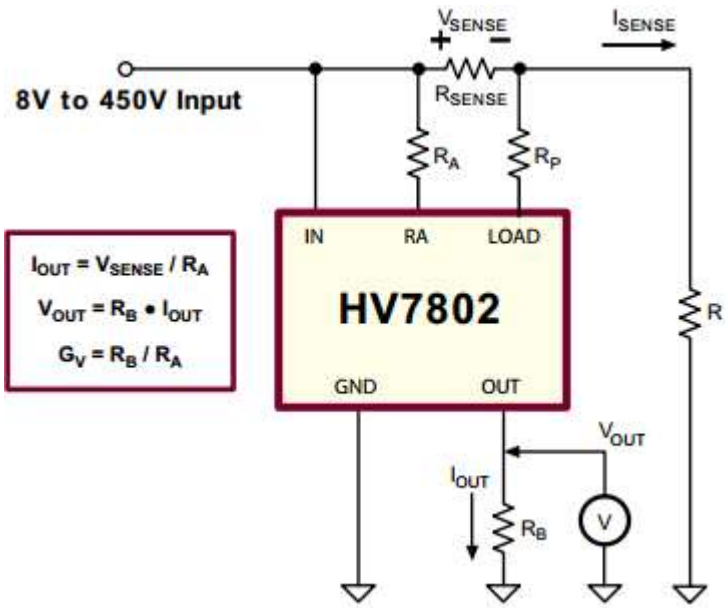

<< BACK

HV892

Online Datasheet

Features:

- Drives capacitive loads up to 200pF
- Programmable drive amplitude (compatible with 40VRMS to 60VRMS lenses)
- On-chip boost converter
- No external inductor
- I²C interface
- Low operating current (≤20mA)
- Low standby current (≤1.0µA)
- Controlled drive edge reduces EMI
- Operating Temperature Range: -40°C to +85°C
- Package Option: WDFN-10

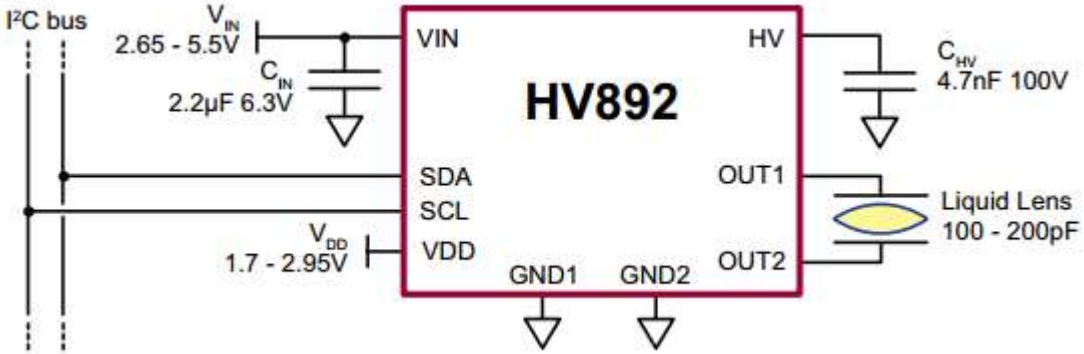

<< BACK

HV254

Online Datasheet

Features:

- 32 independent high voltage amplifiers
- Up to 250V output voltage
- 3.0V/µs typical output slew rate
- Very low operating current (typically 45µA per channel)
- High value internal feedback resistors
- Fixed gain of 50V/V
- Integrated silicon diode for temperature sensing
- Operating Temperature Range: -10°C to +125°C
- Package Option: MQFP-100

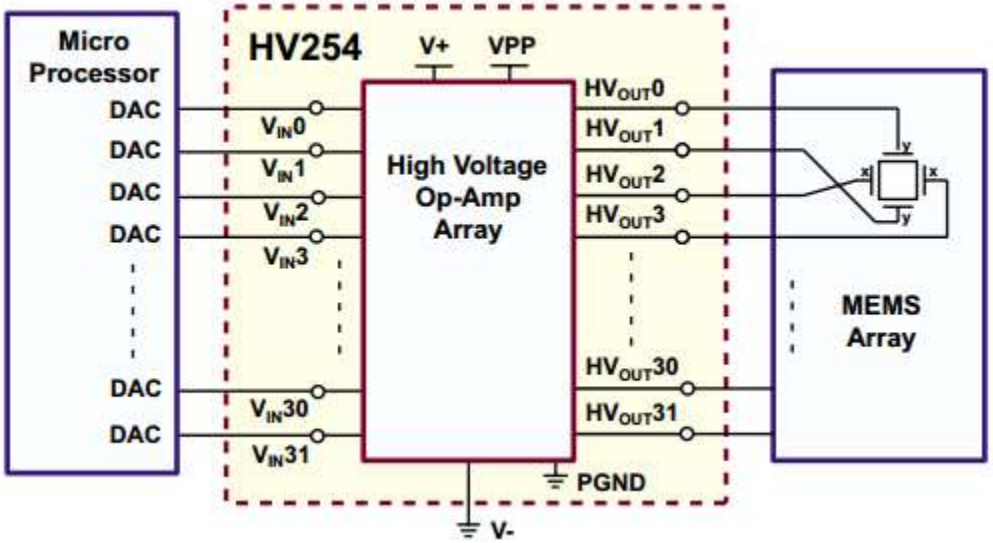

<< BACK

HV256

Online Datasheet

Features:

- 32 independent high voltage amplifiers
- 300V operating voltage
- 295V output voltage
- 2.2V/µs typical output slew rate
- Adjustable output current source limit
- Adjustable output current sink limit
- Internal closed loop gain of 72V/V
- 12MΩ feedback impedance
- Operating Temperature Range: -10°C to +85°C
- Package Option: MQFP-100

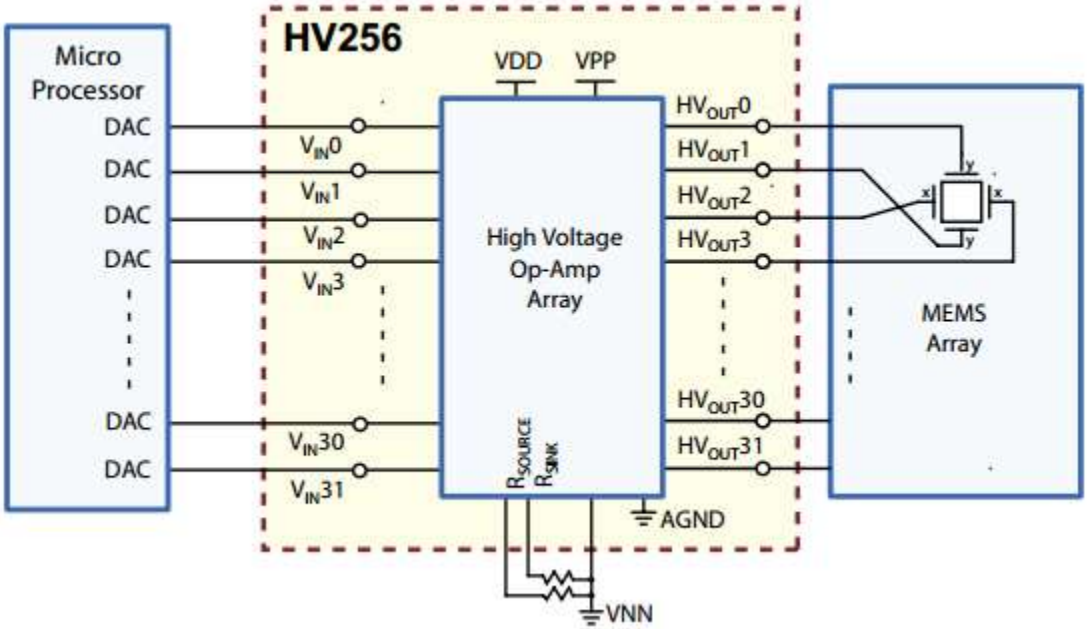

<< BACK

HV257

Online Datasheet

Features:

- 32 independent high voltage amplifiers
- 300V operating voltage
- 295V output voltage
- 2.2V/µs typical output slew rate
- Adjustable output current source limit
- Adjustable output current sink limit
- Internal closed loop gain of 72V/V
- 12MΩ feedback impedance
- Layout ideal for die applications
- Operating Temperature Range: -10°C to +85°C
- Package Option: MQFP-100

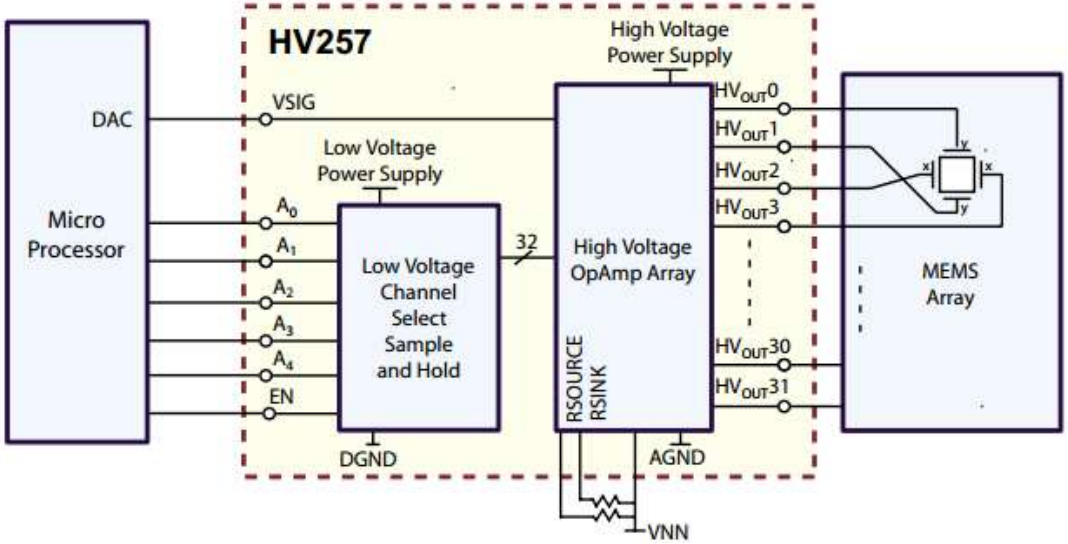

<< BACK

HV264

Online Datasheet

Features:

- Four independent high voltage amplifiers
- 190V output swing
- 9.0V/µs typical output slew rate
- Fixed gain of 66.7V/V
- High value internal feedback resistors
- Very low operating current
- Operating Temperature Range: -40°C to +100°C
- Package Option: TSSOP-24

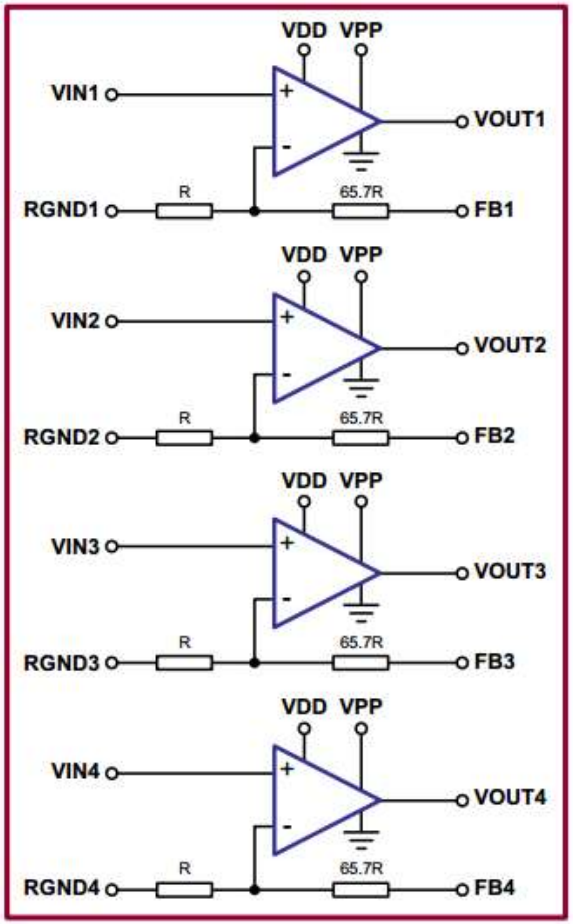

<< BACK

HV9901

Online Datasheet

Features:

- 10 to 450V input voltage range
- Energy saving hold current mode
- Adjustable microcontroller supply
- Low supply current <1.0mA
- Constant current coil
- Programmable pull-in current, pull-in time, and hold current
- Efficient PWM operation using the relay coils' inductance
- Operating Temperature Range: -40°C to +85°C
- Package Option: SOIC-16

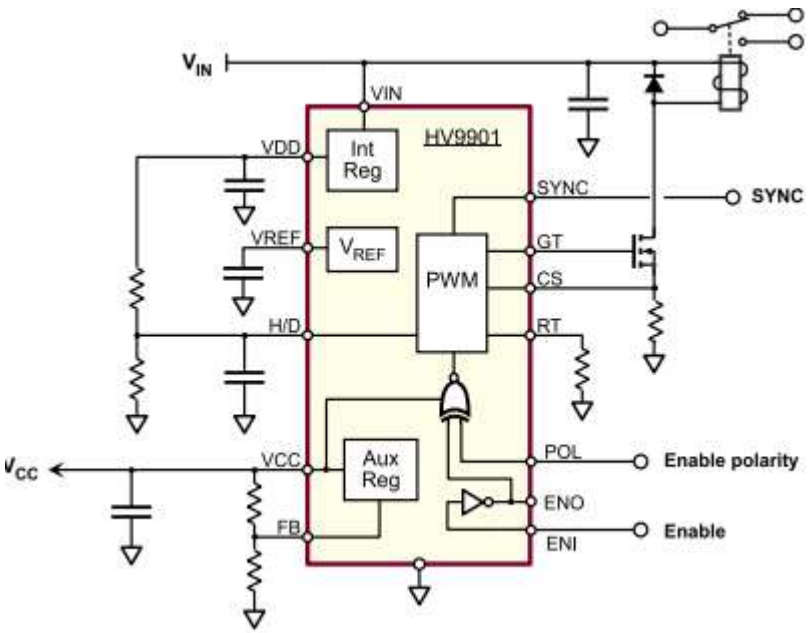

<< BACK

HT0440

Online Datasheet

Features:

- ±400V input to output isolation
- ±700V isolation between outputs
- No external voltage supply required
- Dual isolated output drivers
- Option of internal or external clock
- Operating Temperature Range: -40°C to +85°C
- Package Option: VDFN-10, SOIC-8

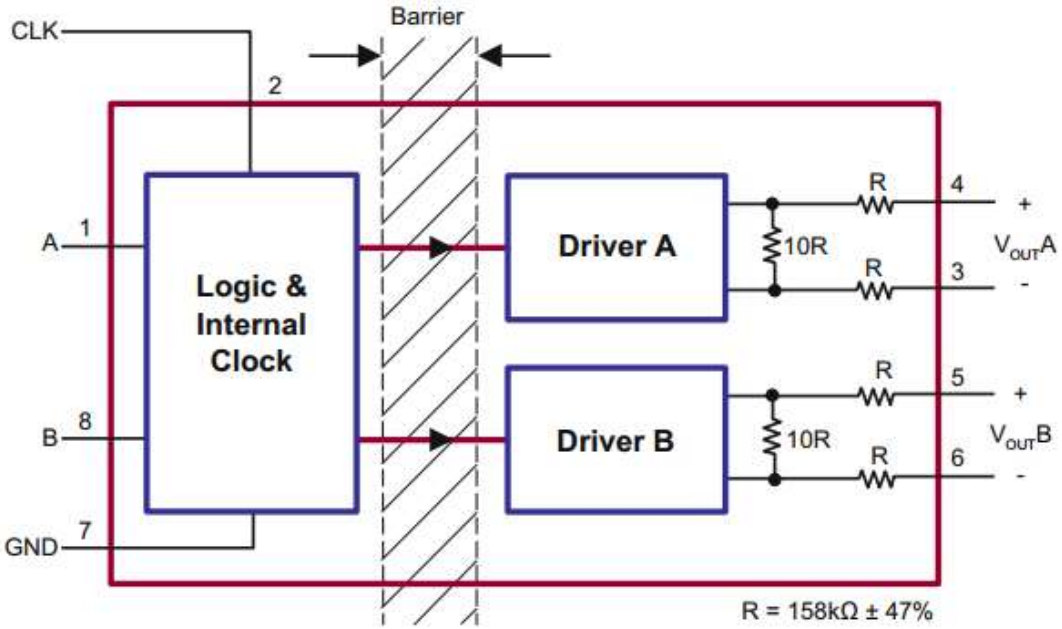

<< BACK

HT0740

Online Datasheet

Features:

- ±400V input to output isolation
- Low input logic current, 500µA max
- No external voltage supply required
- Floating isolated output drivers
- 5.0V logic compatible
- Operating Temperature Range: -40°C to +85°C
- Package Option: SOIC-8

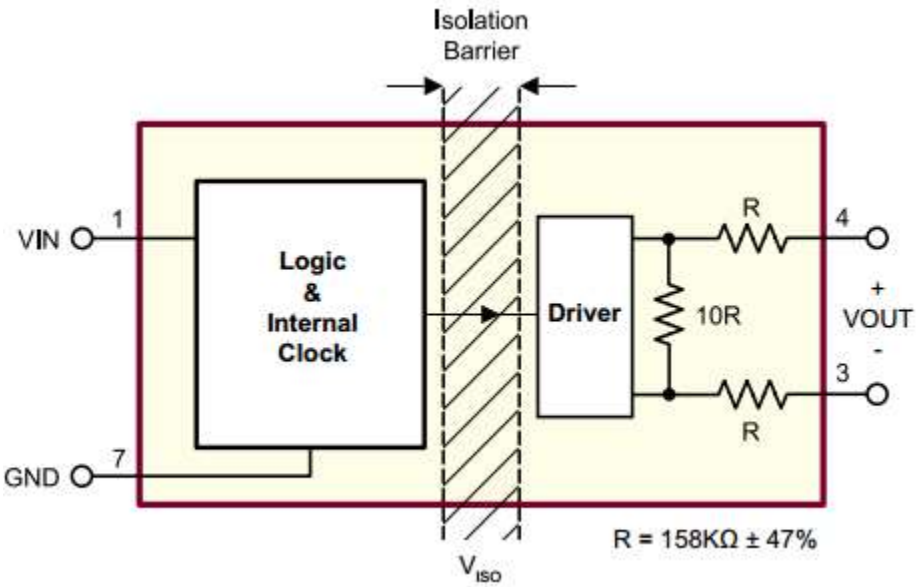

<< BACK

HV509

Online Datasheet

Features:

- Output voltage up to +200V
- Shift register speed 500kHz @ V_{DD} = 2.0V
- 16 high voltage outputs
- High voltage backplane driver
- CMOS input levels
- Operating Temperature Range: -40°C to +125°C
- Package Option: VQFN-32

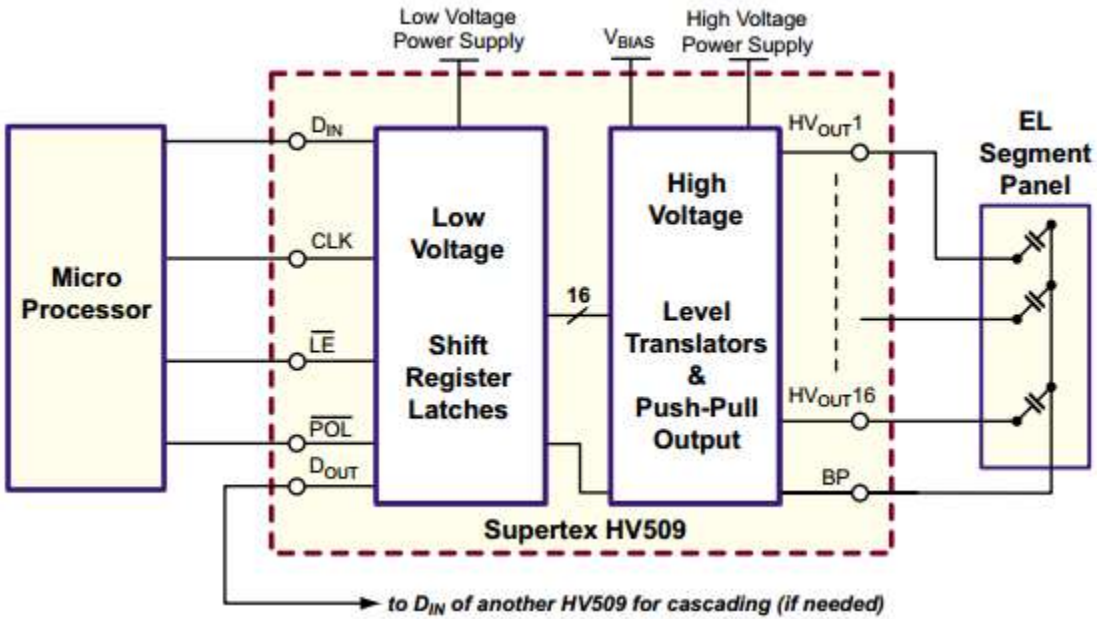

<< BACK

HV528

Online Datasheet

Features:

- Output voltage up to +200V
- Shift register speed 500kHz @ VDD = 1.7V
- 16 high voltage outputs
- High voltage backplane driver
- CMOS input levels
- Operating Temperature Range: -40°C to +125°C
- Package Option: VQFN-32

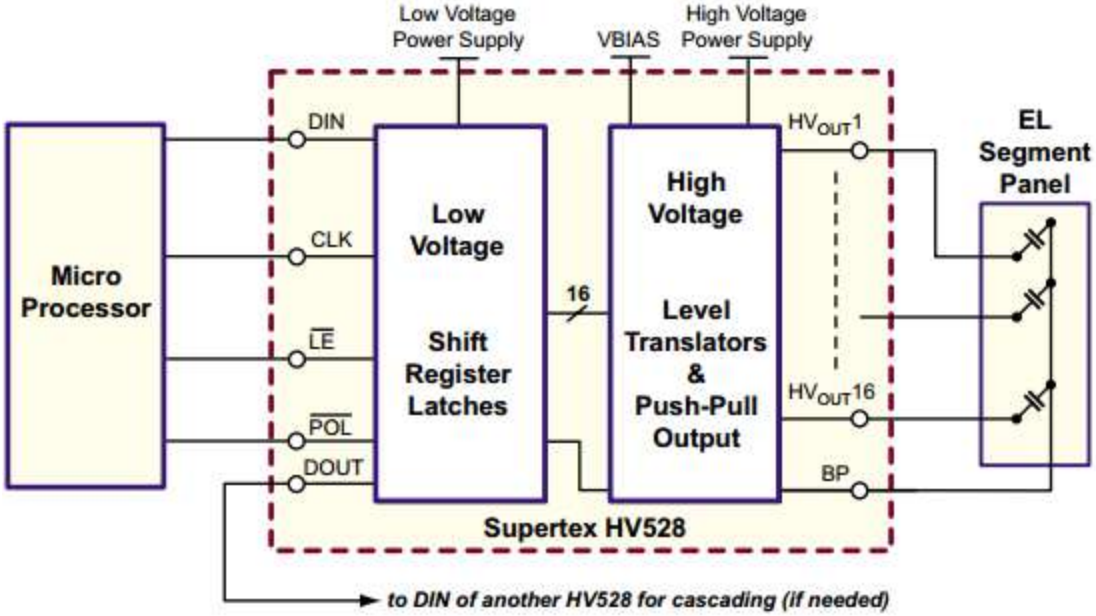

<< BACK

HV809

Online Datasheet

Features:

- Input voltage up to 200V DC
- 400V peak-to-peak output voltage
- Output load up to 350nF (100in^2 for 3.5nF/in^2 lamp)
- Adjustable output lamp frequency
- Adjustable on/off pulsing frequency
- Operating Temperature Range:
  -25°C to +85°C
- Package Option: SOIC-8, SOIC-8 w/HS

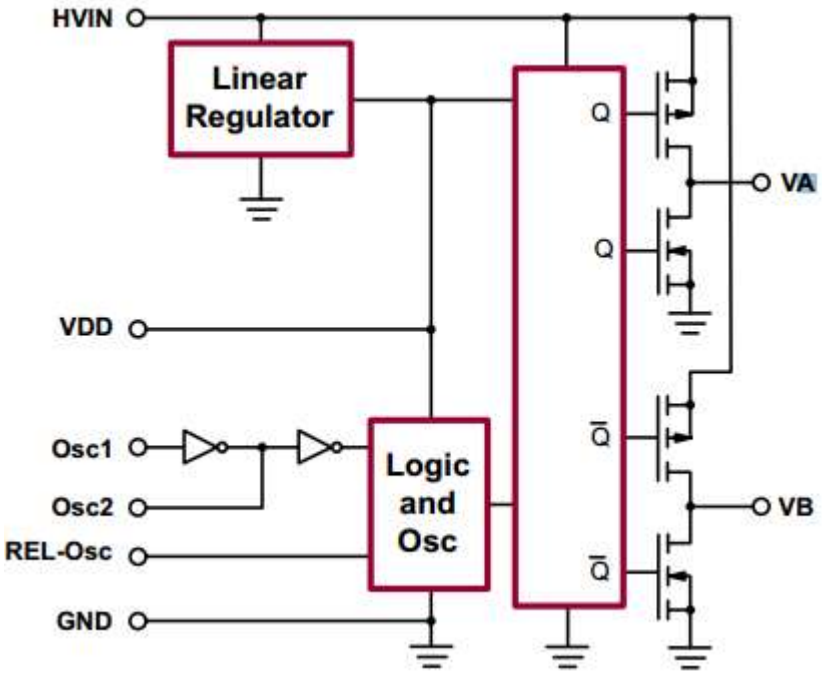

<< BACK

HV816

Online Datasheet

Features:

- 360V_{PP} output voltage for high brightness
- Large output load capability of up to 150nF
- 2.7 to 5.5V operating supply voltage
- Single lithium ion cell compatible
- Adjustable output regulation for dimming
- External switching MOSFET
- Low audible noise
- Output discharge slew rate control
- 1.5V logic
- Dedicated Enable pin
- Two EL frequency controls
- Independent lamp and converter frequency setting
- Split supply capability
- Operating Temperature Range:
  -40°C to +125°C
- Package Option: QFN-16

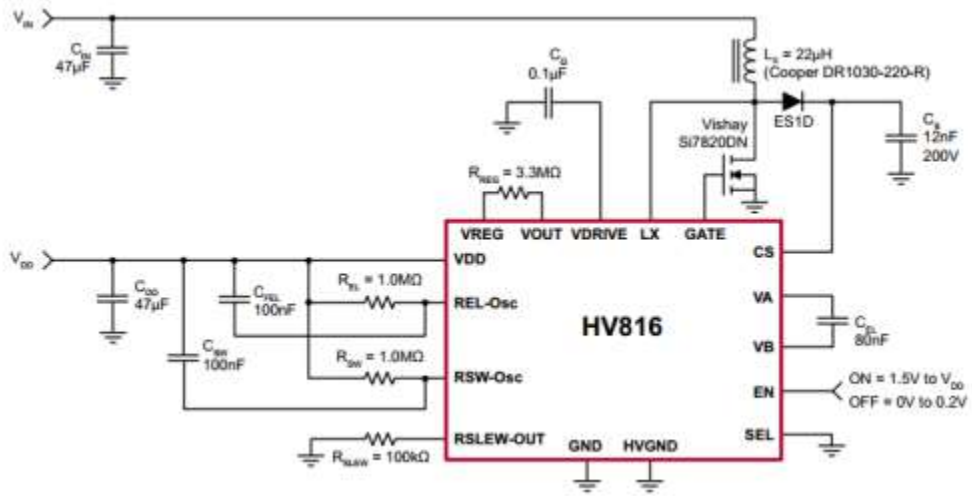

<< BACK

HV823

Online Datasheet

Features:

- 2.0 to 9.5V operating supply voltage
- DC to AC conversion
- 180V peak-to-peak typical output voltage
- Large output load capability typically 50nF
- Permits the use of high-resistance elastomeric lamp components
- Adjustable output lamp frequency to control lamp color, lamp life, and power consumption
- Adjustable converter frequency to eliminate harmonics and optimize power consumption
- Enable/disable function
- Low current draw under no load condition
- Operating Temperature Range:
  -25°C to +85°C
- Package Option: SOIC-8

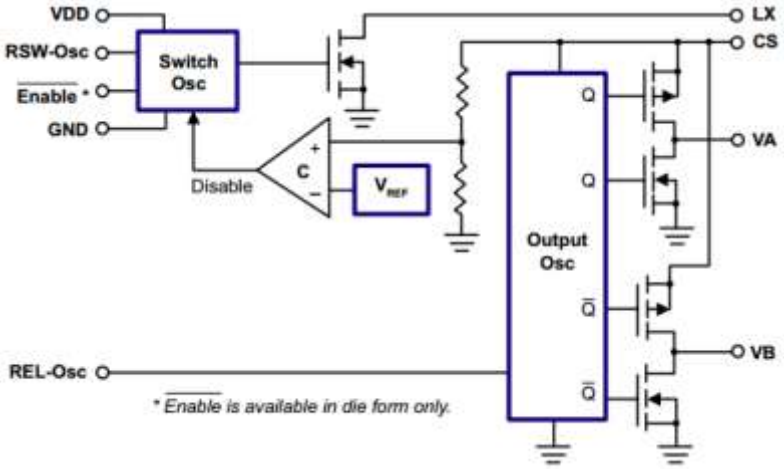

<< BACK

HV825

Online Datasheet

Features:

- 1.0 to 1.6V operating supply voltage
- DC to AC conversion
- Output load of typically up to 6.0nF
- Adjustable output lamp frequency
- Adjustable converter frequency
- Enable function
- Operating Temperature Range: -25°C to +85°C
- Package Option: SOIC-8, MSOP-8

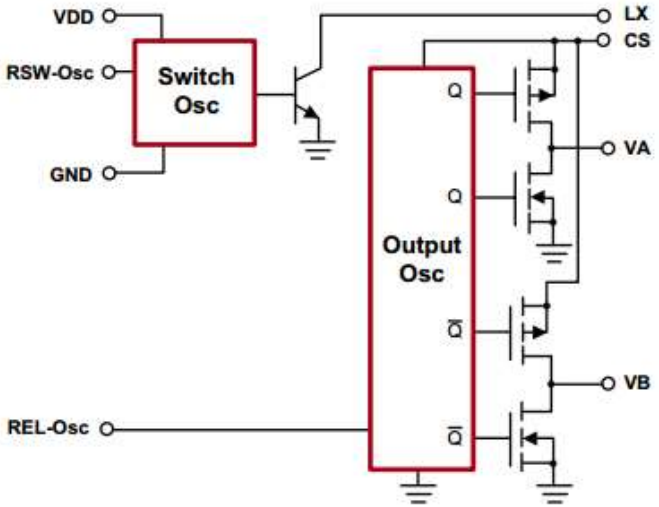

<< BACK

HV830

Online Datasheet

Features:

- 2.0 to 9.5V operating supply voltage
- DC to AC conversion
- 200V peak-to-peak typical output voltage
- Large output load capability typically 50nF
- Permits the use of high-resistance elastomeric lamp
- components
- Adjustable output lamp frequency to control lamp color, lamp life, and power consumption
- Enable/disable function
- Low current draw under no load condition
- Very low standby current - 30nA typical
- Operating Temperature Range:
  -25°C to +85°C
- Package Option: SOIC-8, MSOP-8

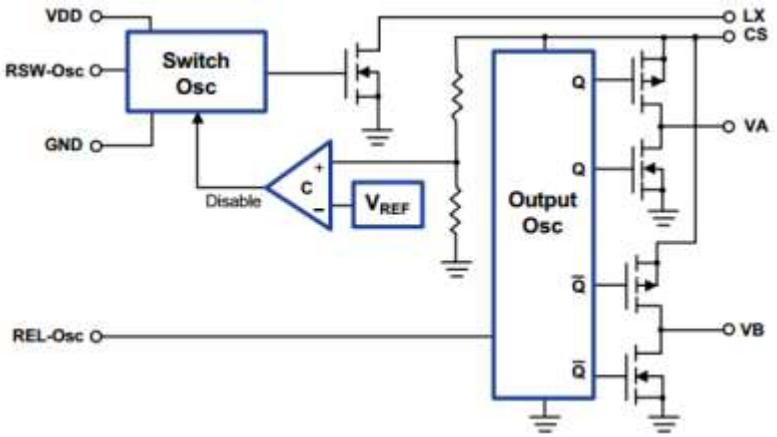

<< BACK

HV833

Online Datasheet

Features:

- 1.8 to 6.5V operating supply voltage
- DC to AC conversion
- Separately adjustable lamp and converter frequency
- Output voltage regulation
- Enable/disable function
- Patented output timing for high efficiency
- <100nA shutdown current
- Split supply capability
- LCD backlighting
- Operating Temperature Range: -40°C to +85°C
- Package Option: MSOP-8

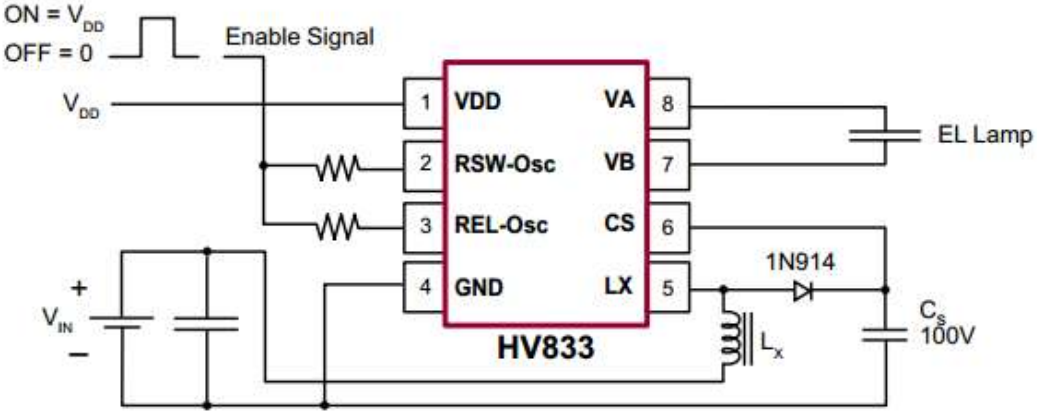

<< BACK

HV850

Online Datasheet

Features:

- No external components required when using an external EL clock frequency
- EL frequency can be set by an external resistor
- Low noise
- DC to AC converter
- Drives up to 5.0nF load (approx. 1.5in^2 lamp)
- Output voltage regulation
- Enable function
- EL Lamp dimming
- Operating Temperature Range: -25°C to +85°C
- Package Option: MSOP-8

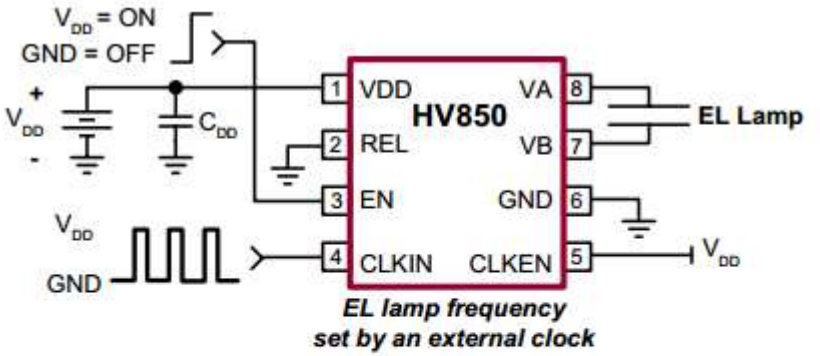

EL lamp frequency set by an external clock

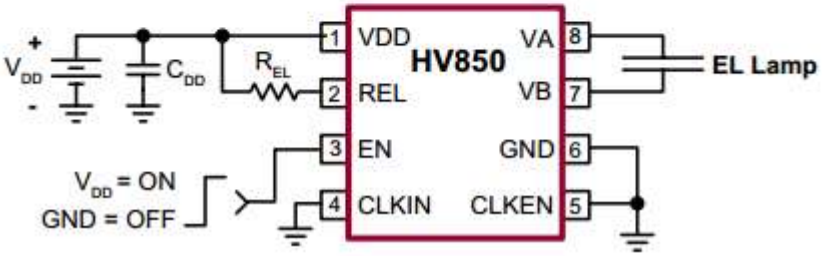

<< BACK

HV852

Online Datasheet

Features:

- No external components required when using an external EL clock frequency
- EL frequency can be set by an external resistor
- Low Noise
- DC to AC converter
- Drives up to 5.3nF (approx. 1.5in^2 lamp) load
- Output voltage regulation
- Enable function
- EL Lamp dimming
- Operating Temperature Range:
  -25°C to +85°C
- Package Option: MSOP-8, WDFN-10

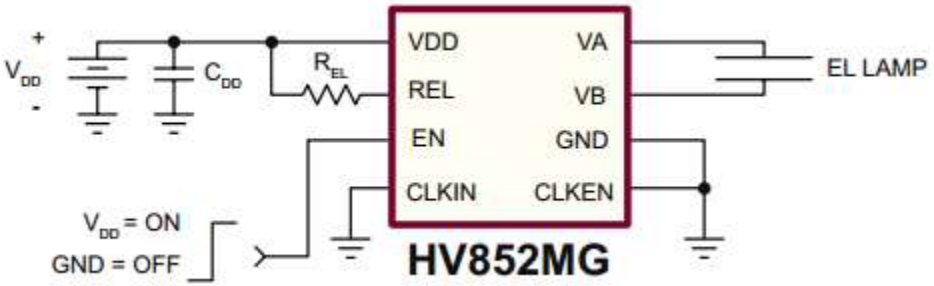

<< BACK

HV853

Online Datasheet

Features:

- No external components required when using an external EL clock frequency
- Audible noise reduction with improved EMI
- EL frequency can be set by an external resistor
- DC to AC converter
- Drives up to 5.3nF (approx. 1.5in^2 lamp) load
- Output voltage regulation
- Enable function
- EL Lamp dimming
- Operating Temperature Range: -25°C to +85°C
- Package Option: MSOP-8, WDFN-10

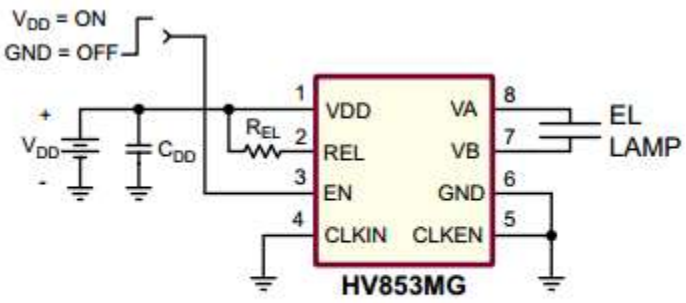

EL Lamp Frequency set by R_{EL}

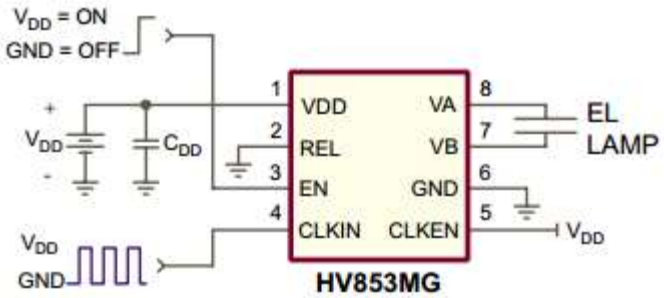

EL Lamp Frequency set by External Clock

<< BACK

HV857

Online Datasheet

Features:

- Patented audible noise reduction
- Patented lamp aging compensation
- Patented output timing for high efficiency
- 190 V_{PP} output voltage for higher brightness
- Single cell lithium ion compatible
- 150nA shutdown current
- Wide input voltage range 1.8V to 5.0V
- Separately adjustable lamp and converter frequencies
- Output voltage regulation
- Split supply capability
- Operating Temperature Range: -40°C to +85°C
- Package Option: WDFN-8, MSOP-8

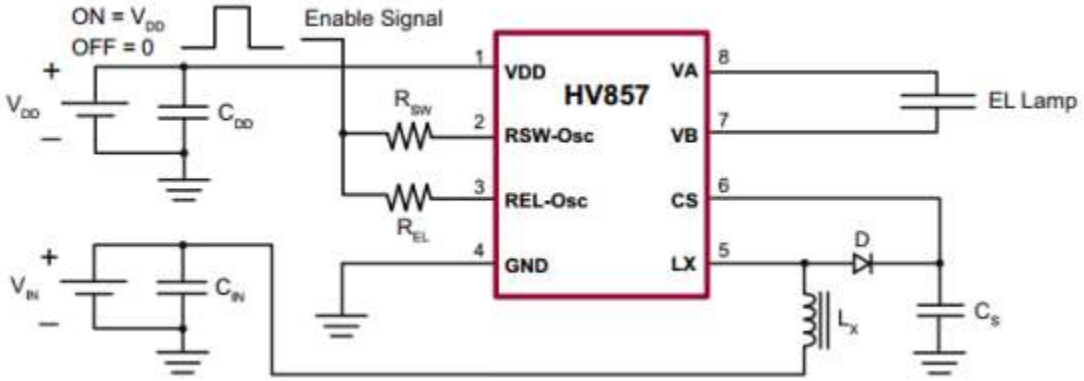

<< BACK

HV857L

Online Datasheet

Features:

- Audible noise reduction
- 190 VPP output voltage for higher brightness
- Single cell lithium ion compatible
- 150nA shutdown current
- Wide input voltage range 1.8V to 5.0V
- Separately adjustable lamp and converter frequencies
- Output voltage regulation
- Split supply capability
- Operating Temperature Range: -40°C to +85°C
- Package Option: WDFN-8, MSOP-8

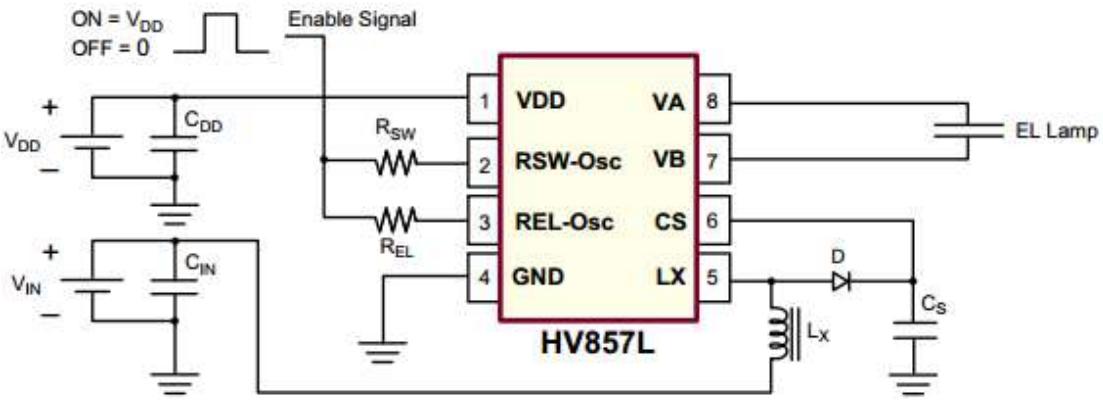

<< BACK

HV859

Online Datasheet

Features:

- Patented audible noise reduction
- Patented lamp aging compensation
- Patented output timing for high efficiency
- 210 V_{PP} output voltage for higher brightness
- Single cell lithium ion compatible
- 150nA shutdown current
- Wide input voltage range 1.8 to 5.0V
- Separately adjustable lamp and converter frequencies
- Output voltage regulation
- Split supply capability
- Operating Temperature Range: -40°C to +85°C
- Package Option: WDFN-8, MSOP-8

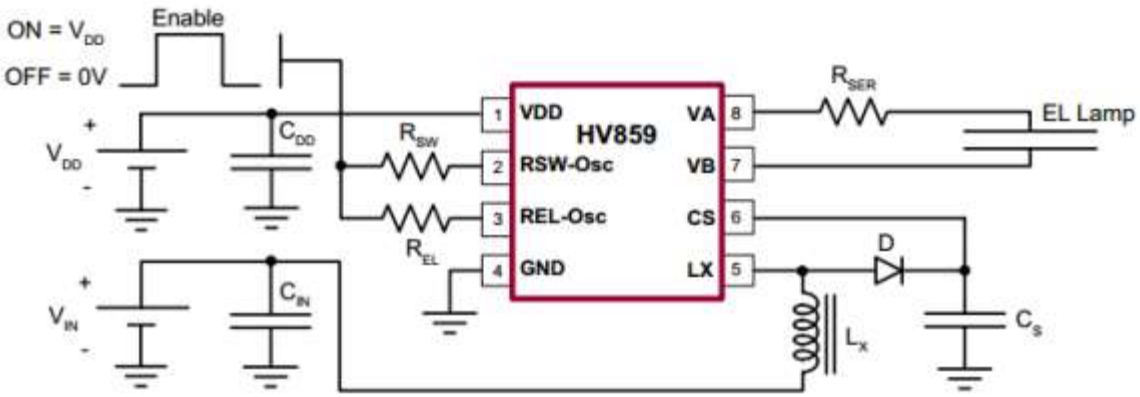

<< BACK

HV860

Online Datasheet

Features:

- Adjustable output regulation for dimming
- 220VPP output voltage for higher brightness
- Single cell lithium ion compatible
- 150nA shutdown current
- Separately adjustable lamp and converter frequencies
- Split supply capability
- Operating Temperature Range: -40°C to +85°C
- Package Option: WQFN-12

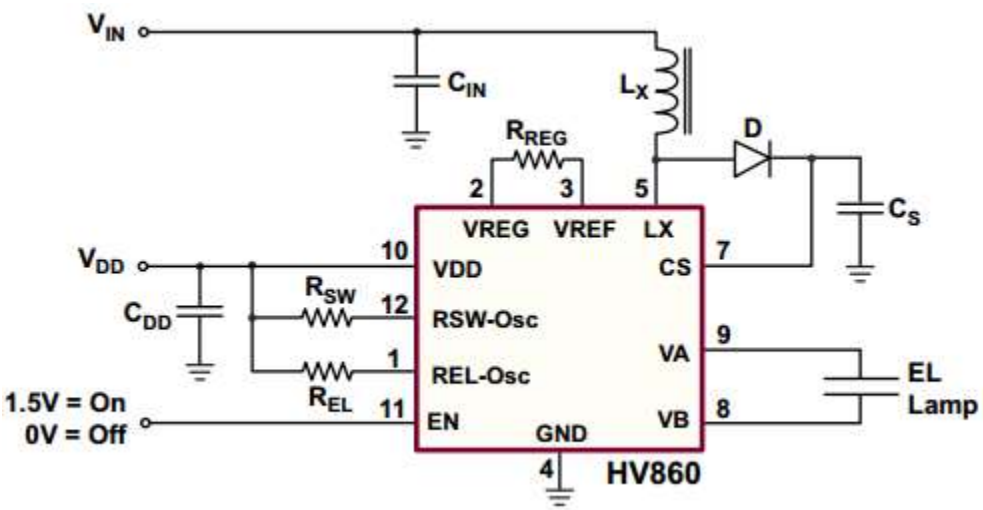

<< BACK

HV861

Online Datasheet

Features:

- Adjustable output regulation for dimming
- Lamp fade-in/fade-out capability
- Low audible noise
- 180VPP output voltage for higher brightness
- 1.5V enable input logic high
- Single cell lithium ion compatible
- One miniature inductor to power both lamps
- Separately adjustable lamp and converter frequencies
- Split supply capability
- Operating Temperature Range: -40°C to +85°C
- Package Option: WQFN-16

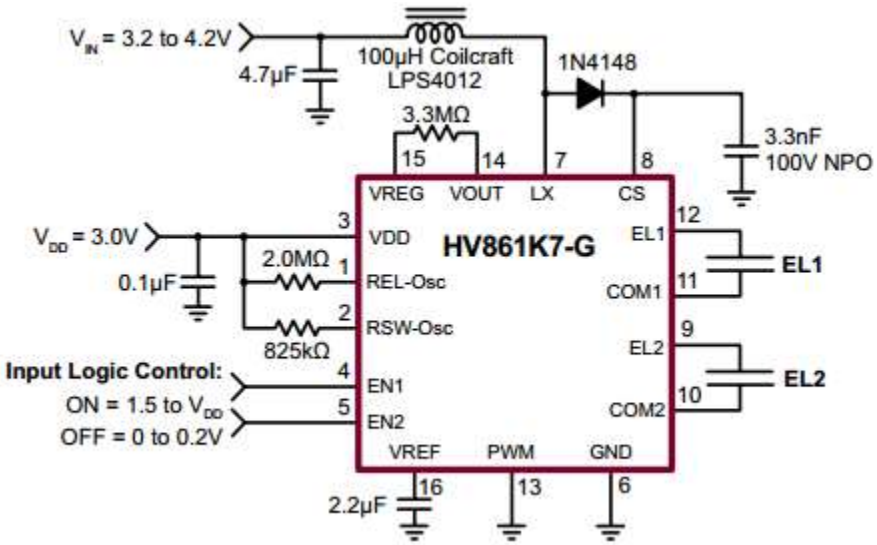

<< BACK

HV3418

Online Datasheet

Features:

- Output voltages to 180V
- Low power level shifting
- Shift register speed:
  - 6.0MHz @ VDD = 5.0V
  - 12MHz @ VDD = 12V
- Latched data outputs
- Output polarity and blanking
- CMOS compatible inputs
- Forward and reverse shifting optior
- Operating Temperature Range: -40°C to +85°C
- Package Option: PQFP-80

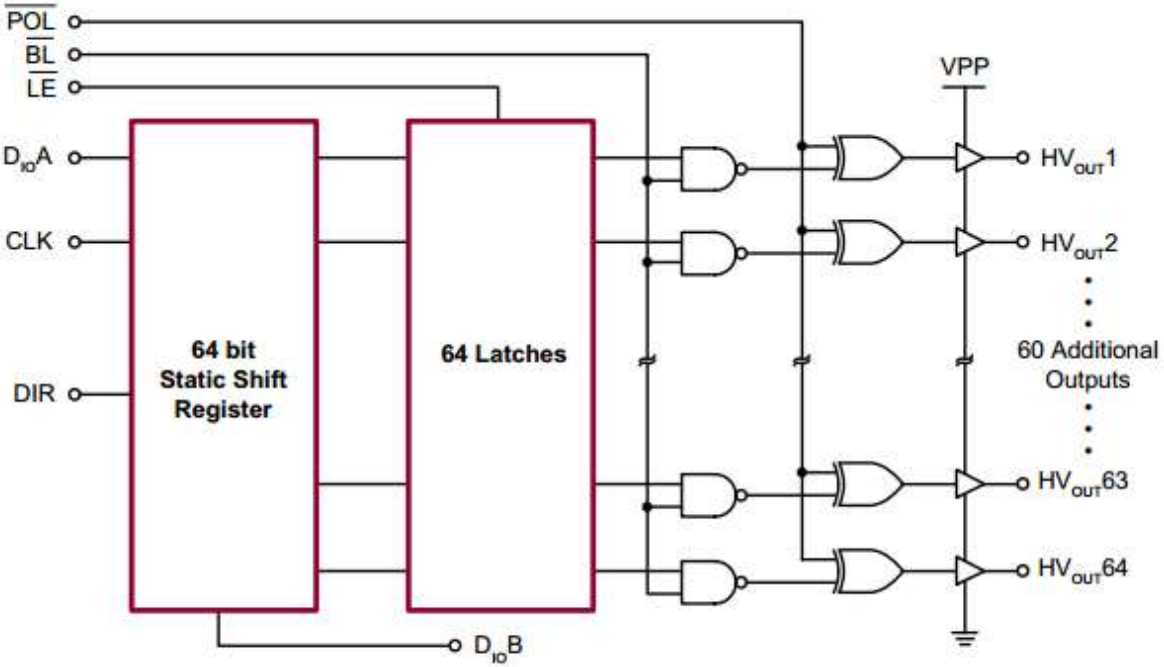

<< BACK

HV507

Online Datasheet

Features:

- Operating output voltages to 300V
- Low power level shifting from 5.0 to 300V
- Shift register speed: 8.0MHz @ VDD = 5.0V
- 64 latched data outputs
- Output polarity and blanking
- CMOS compatible inputs
- Forward and reverse shifting options
- Operating Temperature Range: 0°C to +70°C
- Package Option: PQFP-80

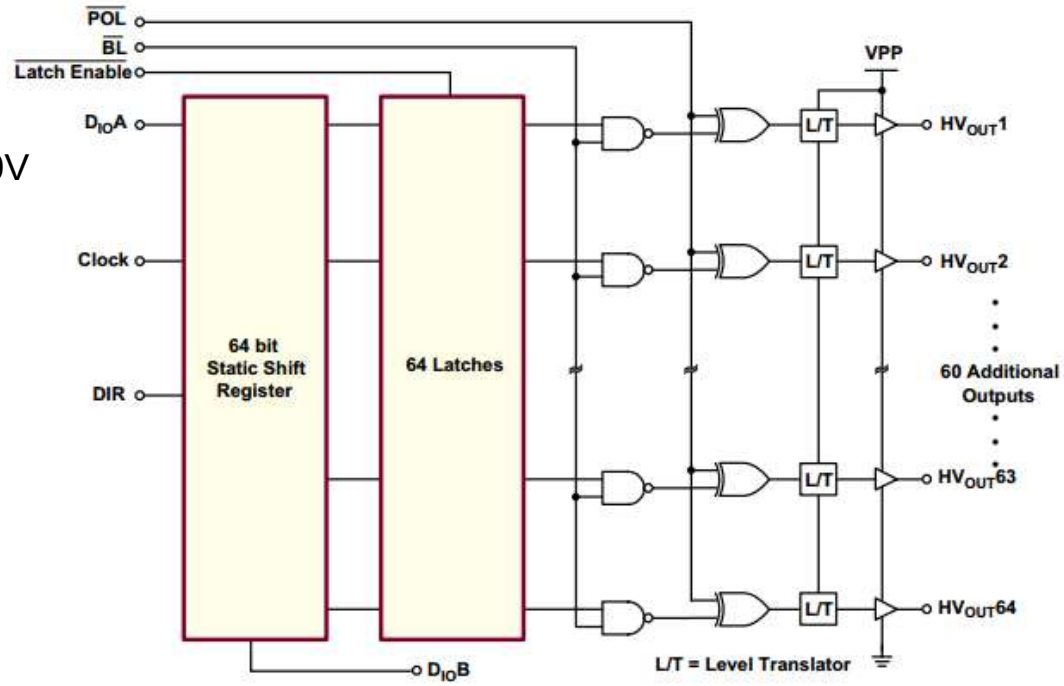

<< BACK

HV508

Online Datasheet

Features:

- Logic-selectable output voltage
- 100nF drive capability
- Up to $90V_{P-P}$
- 25µs response time
- Operating Temperature Range: -5°C to +60°C
- Package Option: SOIC-8

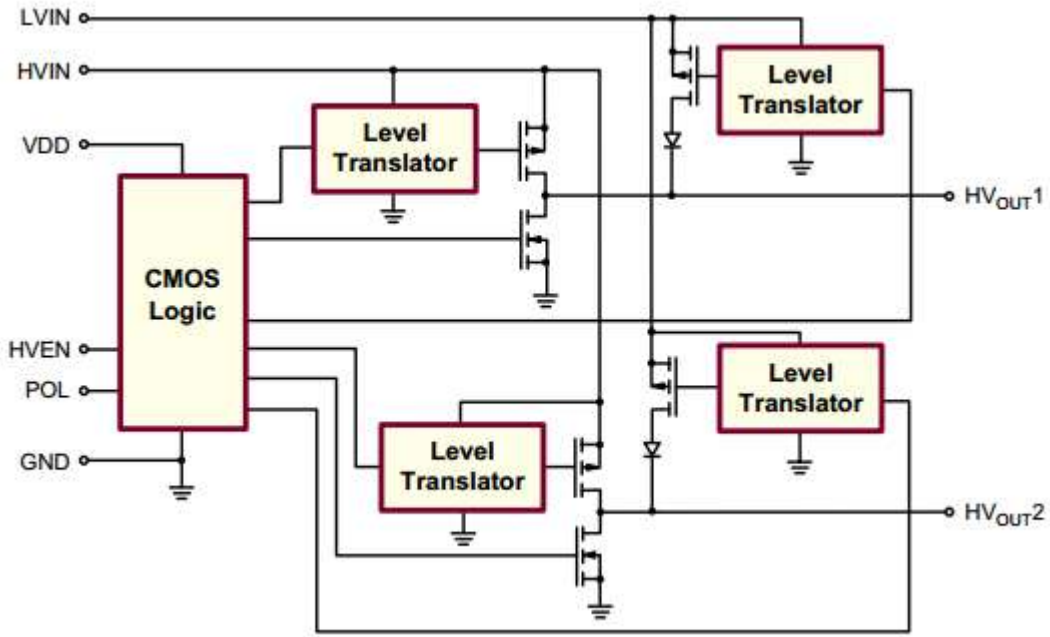

<< BACK

HV5122

Online Datasheet

Features:

- Output voltages to 225V using a ramped supply voltage
- SINK current minimum 100mA
- Shift register speed 8.0MHz
- Strobe and enable inputs
- CMOS compatible inputs
- Forward and reverse shifting options
- Operating Temperature Range: -40°C to +85°C
- Package Option: PQFP-44, PLCC-44

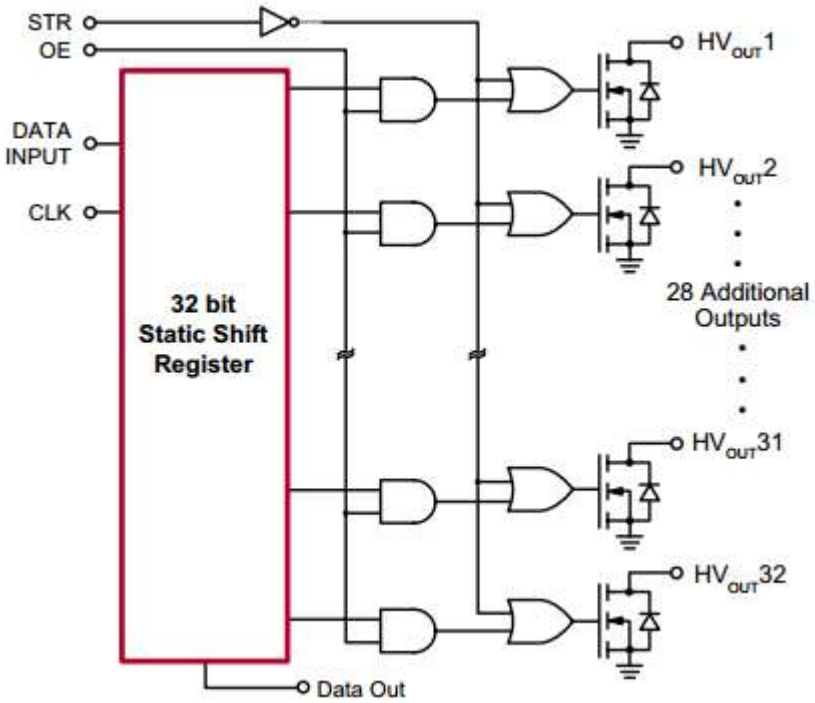

<< BACK

HV513

Online Datasheet

Features:

- Operating output voltage of 250V
- Low power level shifting from 5.0 to 250V
- Shift register speed 8.0MHz @ VDD = 5.0V
- 8 latch data outputs
- Output polarity and blanking
- Output short circuit detect
- Output high-Z control
- CMOS compatible inputs
- Operating Temperature Range: -40°C to +85°C
- Package Option: WQFN-32, SOIC-24 (300mil)

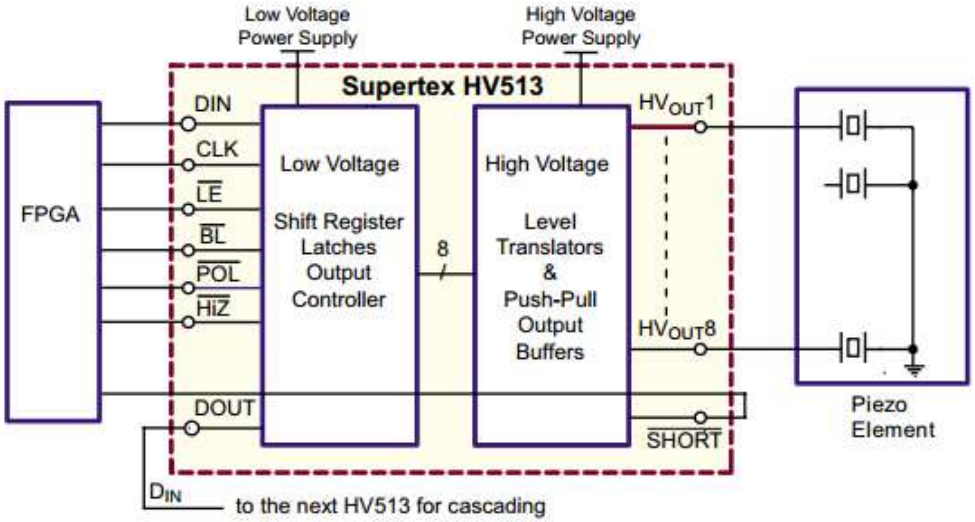

<< BACK

HV518

Online Datasheet

Features:

- 32 output lines
- 90V output swing
- Active pull-down
- Latches on all outputs
- Up to 6.0MHz @ VDD = 5.0V
- Operating Temperature Range: -40°C to +85°C
- Package Option: PDIP-40, PLCC-44

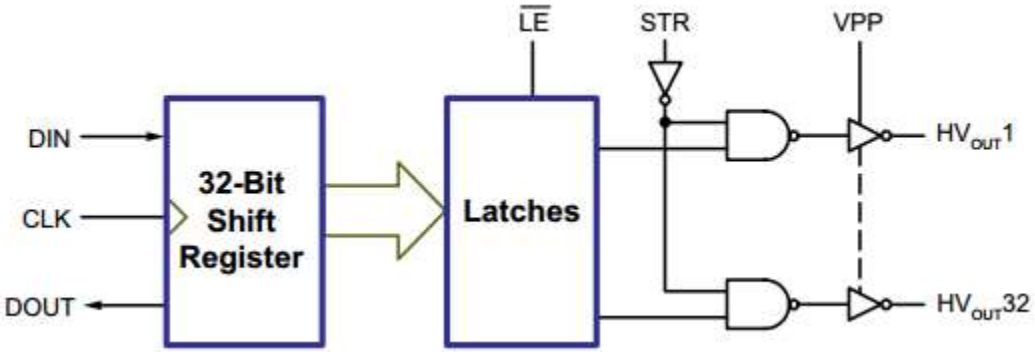

<< BACK

HV5222

Online Datasheet

Features:

- Output voltages to 225V using a ramped supply voltage
- SINK current minimum 100mA
- Shift register speed 8.0MHz
- Strobe and enable inputs
- CMOS compatible inputs
- Forward and reverse shifting options
- Operating Temperature Range: -40°C to +85°C
- Package Option: PQFP-44, PLCC-44

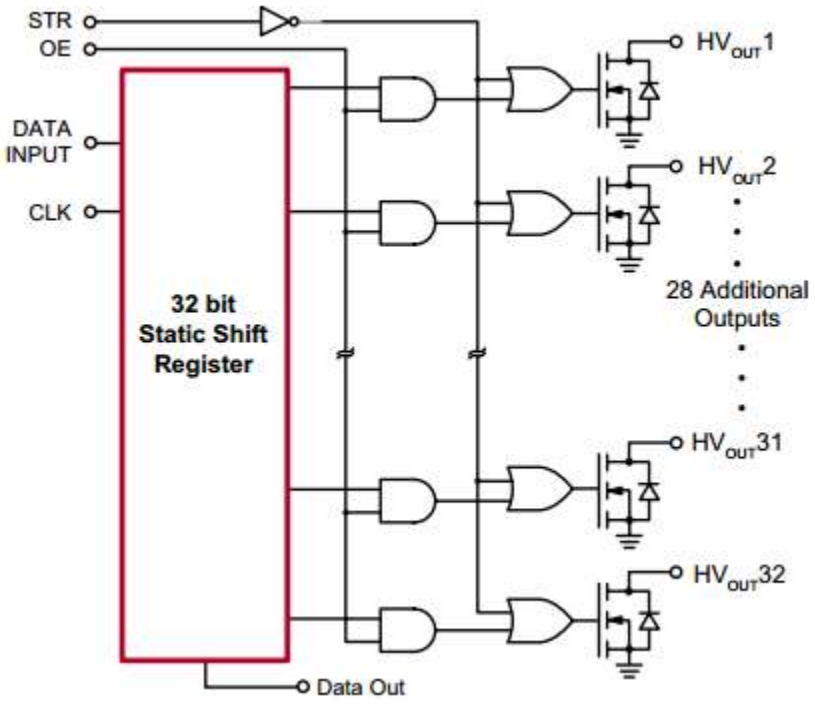

<< BACK

HV5308

Online Datasheet

Features:

- Processed with HVCMOS® technology
- Low power level shifting
- Source/sink current minimum 20mA
- Shift register speed 8.0MHz
- Latched data outputs
- CMOS compatible inputs
- Forward and reverse shifting options
- Diode to VPP allows efficient power recovery
- Operating Temperature Range: -40°C to +85°C
- Package Option: PQFP-44, PLCC-44

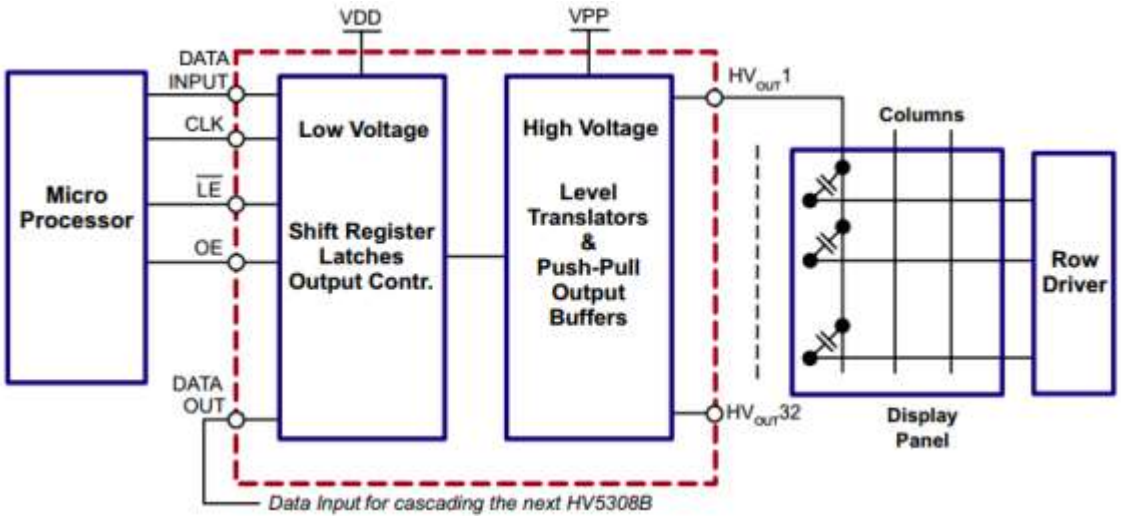

<< BACK

HV5408

Online Datasheet

Features:

- Processed with HVCMOS® technology
- Low power level shifting
- SOURCE/SINK current minimum 20mA
- Shift register speed 8.0MHz
- Latched data outputs
- CMOS compatible inputs
- Forward and reverse shifting options
- Diode to VPP allows efficient power recovery
- Operating Temperature Range: -40°C to +85°C
- Package Option: PQFP-44, PLCC-44

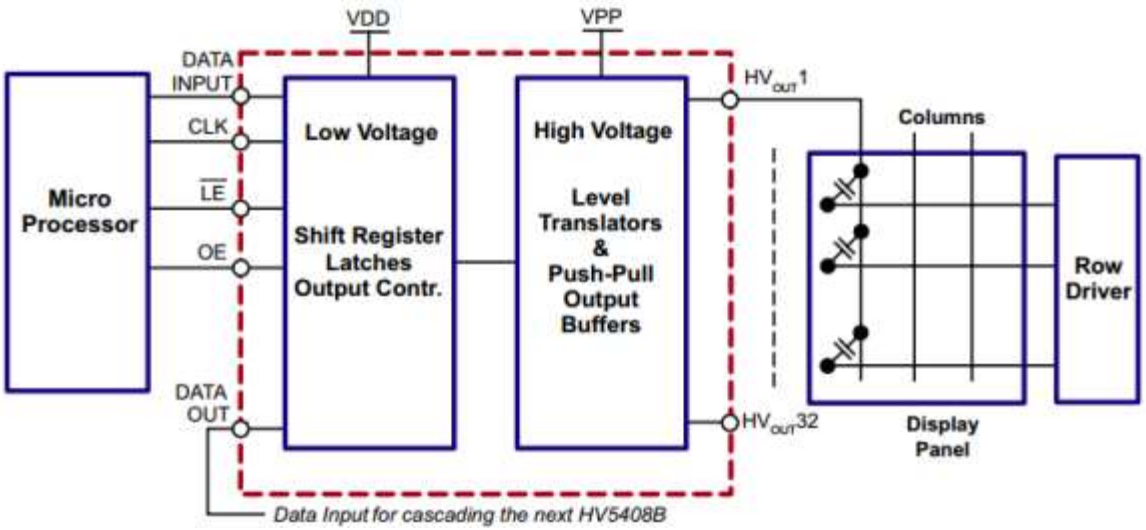

<< BACK

HV7022

Online Datasheet

Features:

- HVCMOS® technology
- Symmetric row drive (reduces latent imaging in ACTFEL displays)
- Output voltage up to +230V
- Low power level shifting
- Source/sink current minimum 70mA
- Shift register speed 4.0MHz
- Pin-programmable shift direction
- Operating Temperature Range: -40°C to +85°C
- Package Option: PLCC-44

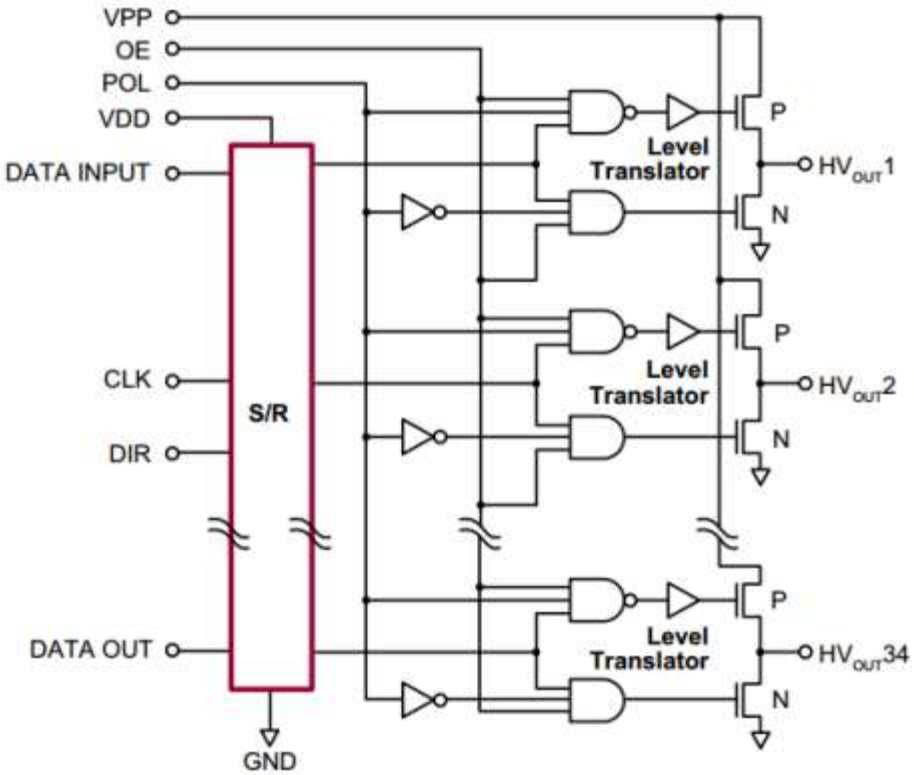

<< BACK

HV5522

Online Datasheet

Features:

- Sink current minimum 100mA
- Shift register speed 8.0MHz
- Polarity and blanking inputs
- CMOS compatible inputs
- Forward and reverse shifting options
- Diode to VPP allows efficient power recovery
- Operating Temperature Range: -40°C to +85°C
- Package Option: PQFP-44, PLCC-44

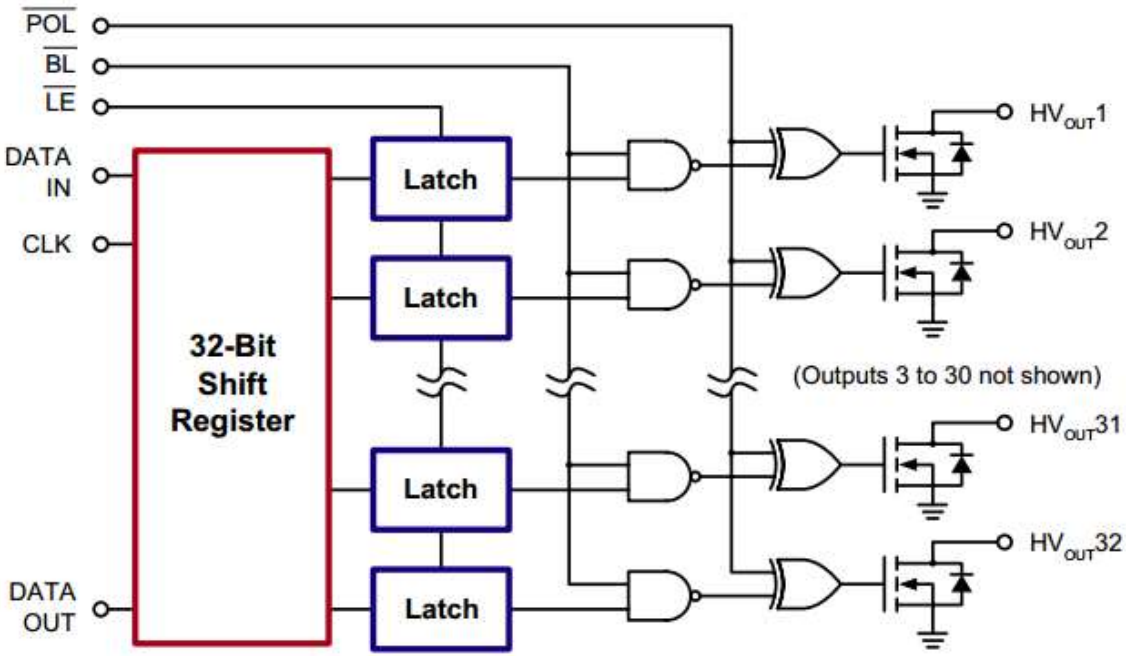

<< BACK

HV5523

Online Datasheet

Features:

- Sink current minimum 100mA
- Shift register speed 16MHz
- Polarity and blanking inputs
- CMOS compatible inputs
- Operating Temperature Range: -40°C to +85°C
- Package Option: WQFN-44

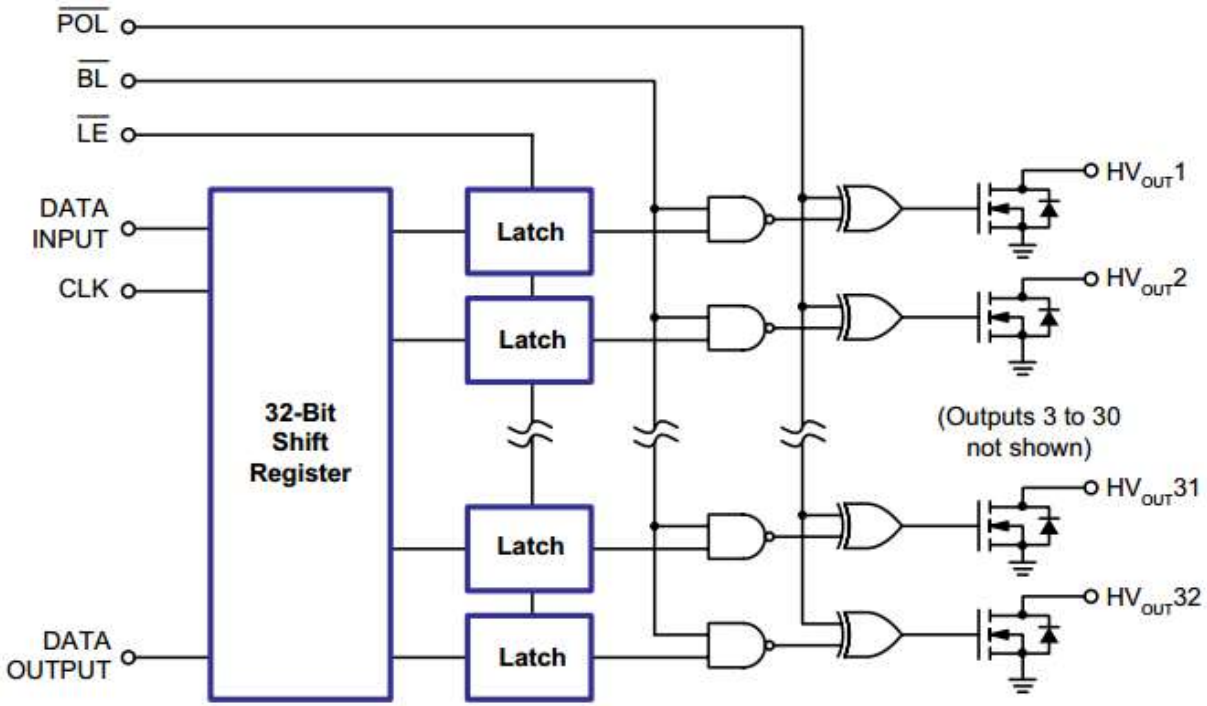

<< BACK

HV5530

Online Datasheet

Features:

- Sink current minimum 100mA
- Shift register speed 8.0MHz
- Polarity and blanking inputs
- CMOS compatible inputs
- Forward and reverse shifting options
- Diode to VPP allows efficient power recovery
- Operating Temperature Range: -40°C to +85°C
- Package Option: PQFP-44, PLCC-44

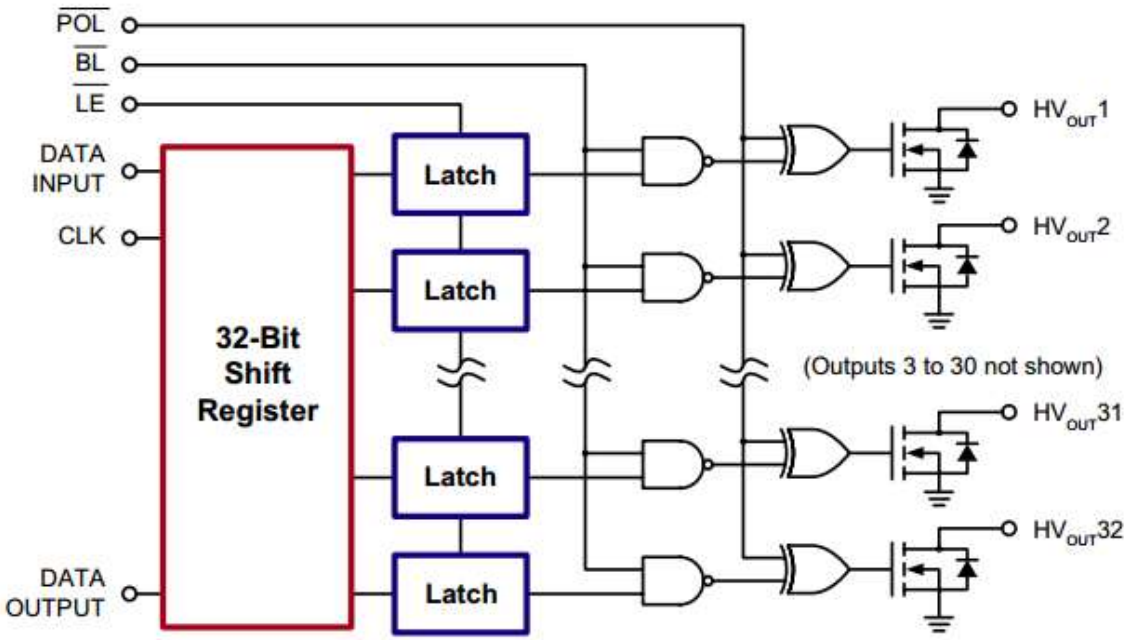

<< BACK

HV5622

Online Datasheet

Features:

- Sink current minimum 100mA
- Shift register speed 8.0MHz
- Polarity and blanking inputs
- CMOS compatible inputs
- Forward and reverse shifting options
- Diode to VPP allows efficient power recovery
- Operating Temperature Range: -40°C to +85°C
- Package Option: PQFP-44, PLCC-44

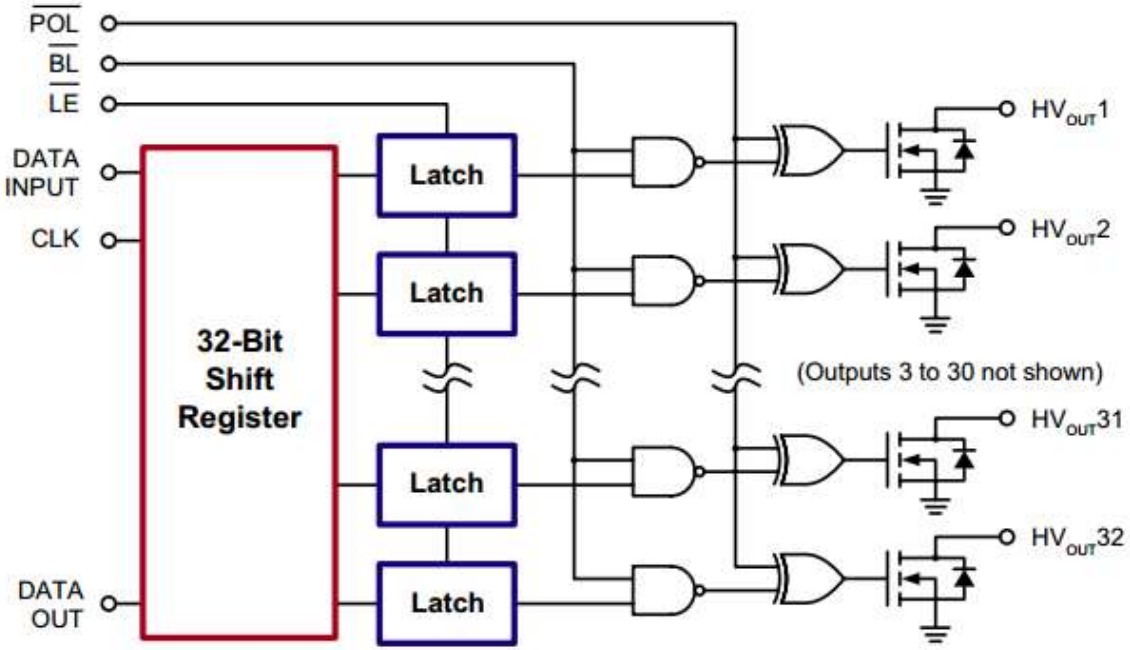

<< BACK

HV5623

Online Datasheet

Features:

- Sink current minimum 100mA
- Shift register speed 16MHz
- Polarity and blanking inputs
- CMOS compatible inputs
- Operating Temperature Range: -40°C to +85°C
- Package Option: WQFN-44

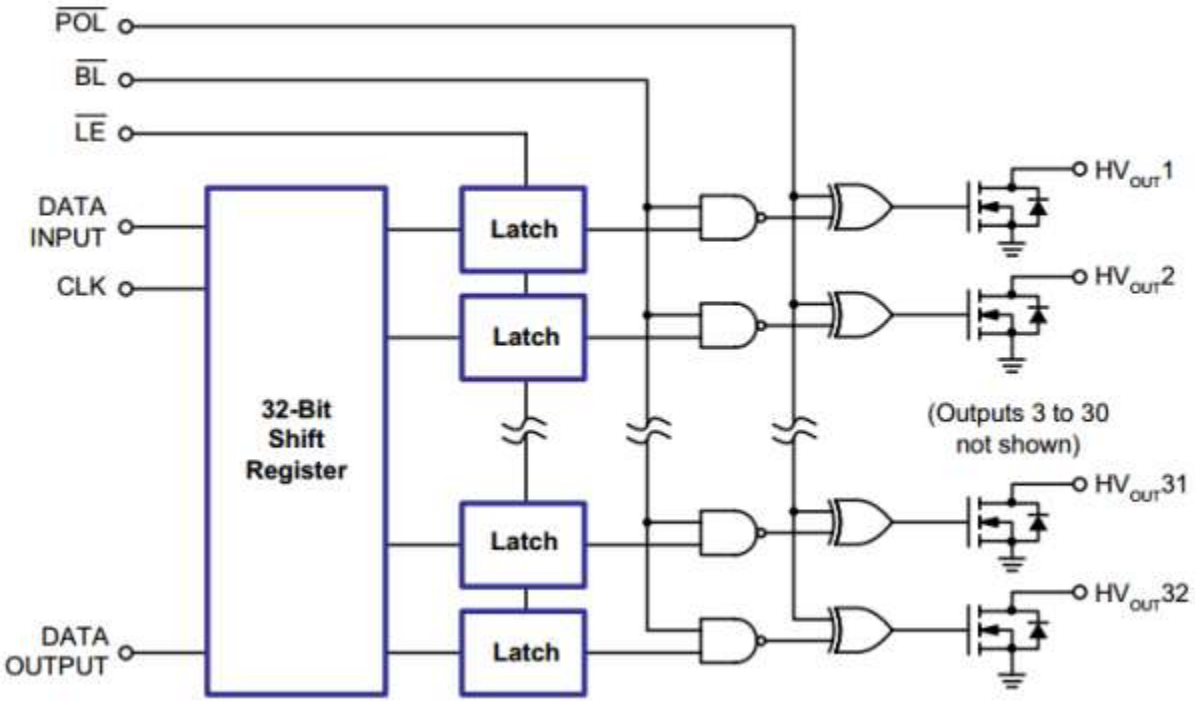

<< BACK

HV5630

Online Datasheet

Features:

- Sink current minimum 100mA
- Shift register speed 8.0MHz
- Polarity and blanking inputs
- CMOS compatible inputs
- Forward and reverse shifting options
- Diode to VPP allows efficient power recovery
- Operating Temperature Range: -40°C to +85°C
- Package Option: PLCC-44

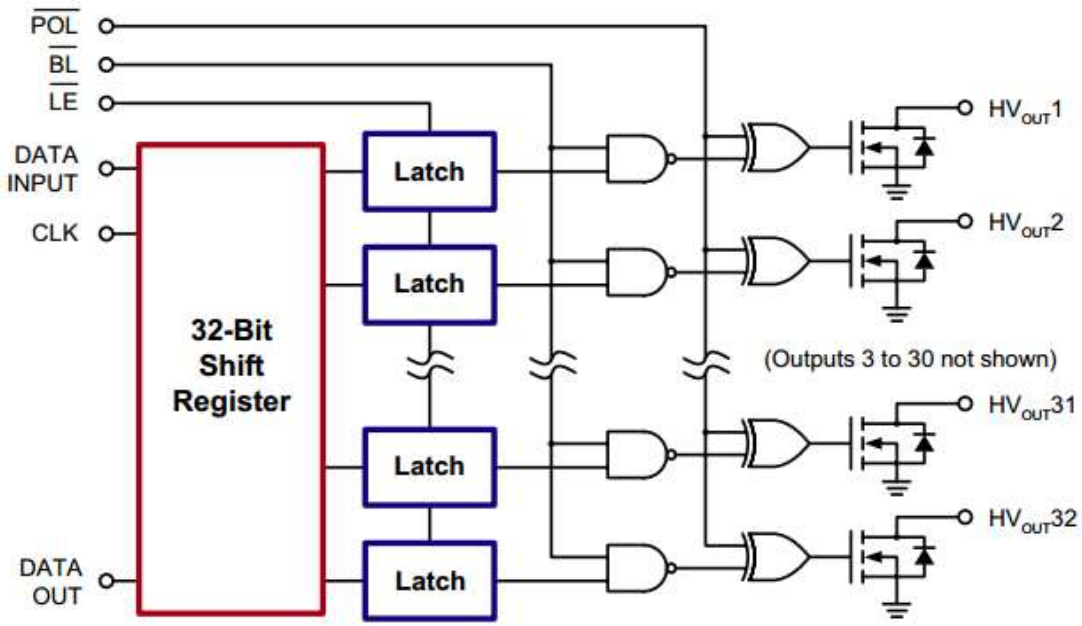

<< BACK

HV574

Online Datasheet

Features:

- 5.0V CMS Logic
- Output voltage up to 80V
- Low power level shifting
- 100MHz equivalent data rate using four dynamic shift registers
- Latched data outputs
- Forward and reverse shifting options (DIR pin)
- Diode to VPP allows efficient power recovery
- Outputs may be hot switched
- Operating Temperature Range: -40°C to +85°C
- Package Option: PQFP-100

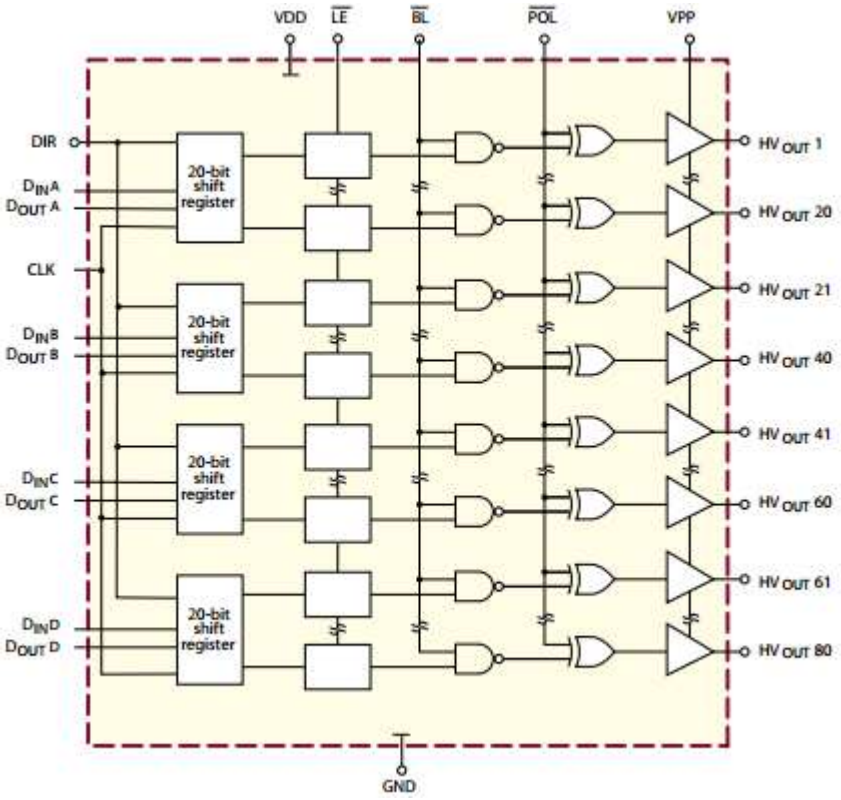

<< BACK

HV57708

Online Datasheet

Features:

- 5.0V CMS Logic
- Output voltage up to +80V
- Low power level shifting
- 32MHz equivalent data rate
- Latched data outputs
- Forward and reverse shifting options (DIR pin)
- Diode to VPP allows efficient power recovery
- Outputs may be hot switched
- Operating Temperature Range:
  -40°C to +85°C
- Package Option: PQFP-80

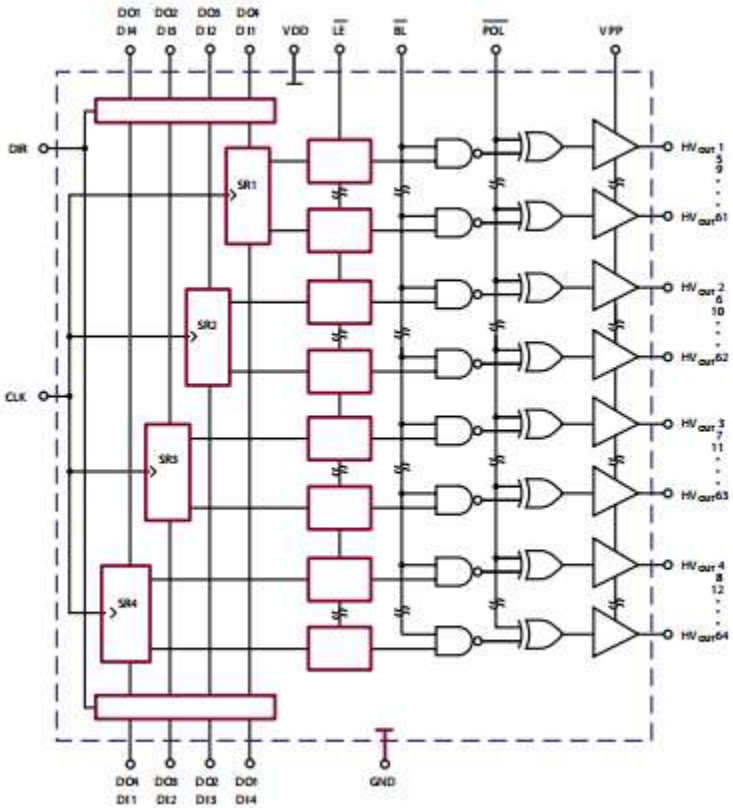

<< BACK

HV57009

Online Datasheet

Features:

- 5.0V CMOS Logic
- Output voltage up to -85V
- Output current source control
- 16MHz equivalent data rate
- Latched data outputs
- Forward and reverse shifting options (DIR pin)
- Diode to VDD allows efficient power recovery
- Operating Temperature Range: -40°C to +85°C
- Package Option: PQFP-44

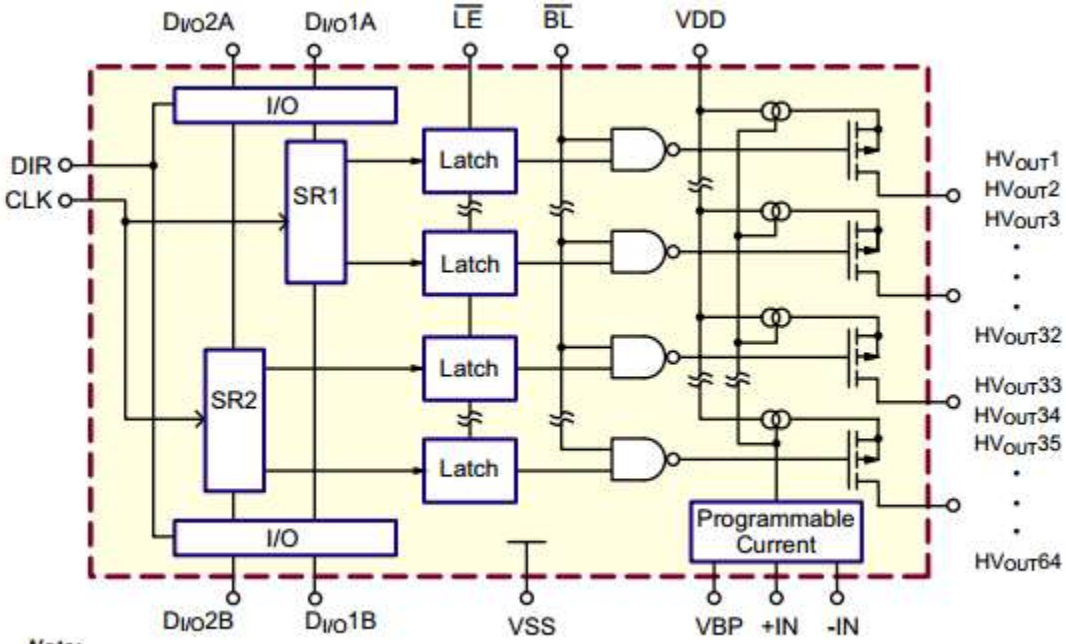

Note:
Each SR (shift register) provides 32 outputs. SR1 supplies outputs 1 to 32 and SR2 supplies outputs 33 to 64.

<< BACK

HV57908

Online Datasheet

Features:

- 5.0V CMS Logic
- Output voltage up to +80V
- Low power level shifting
- 8.0MHz data rate
- Latched data outputs
- Forward and reverse shifting options (DIR pin)
- Diode to VPP allows efficient power recovery
- Outputs may be hot switched
- Operating Temperature Range: -40°C to +85°C
- Package Option: PQFP-80

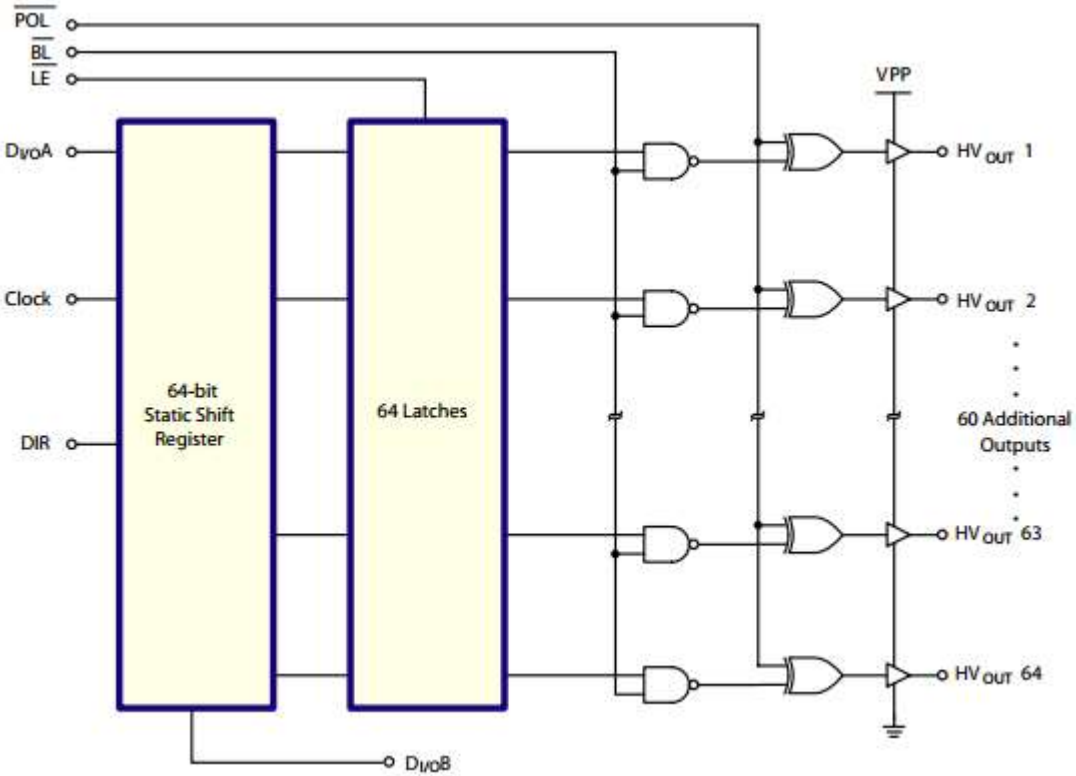

<< BACK

HV5812

Online Datasheet

Features:

- Operating voltage up to 80V
- High speed source driver
- 5.0V CMOS logic circuitry
- Up to 5.0MHz data input rate
- Excellent noise immunity
- Flexible high voltage supplies
- Operating Temperature Range: -40°C to +125°C
- Package Option: PDIP-28, PLCC-28, SOIC-28 (300mil)

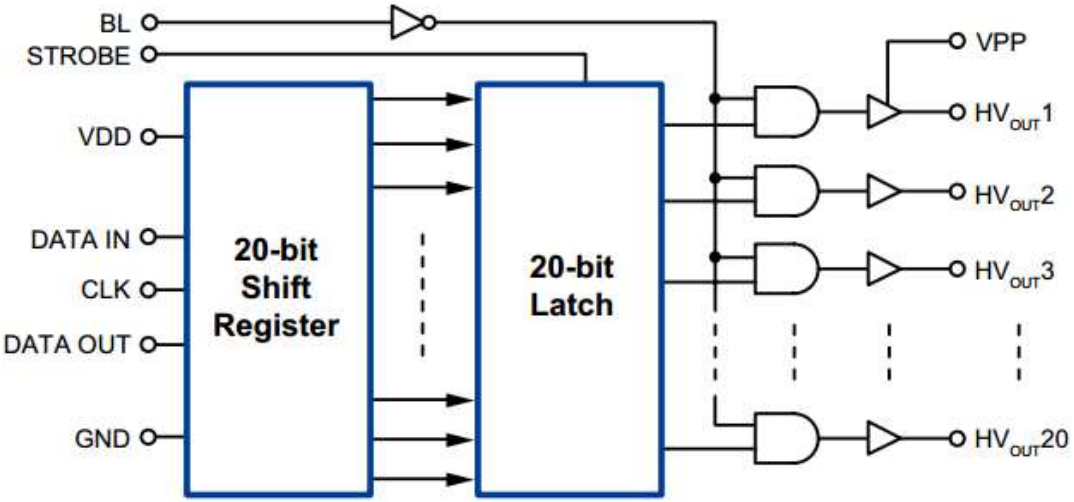

<< BACK

HV582

Online Datasheet

Features:

- 96 High Voltage Channels
  - Up to 80V Operating Output Voltage
  - 75 mA sink/source peak current
- 6 Interleaved 16-bit Shift Registers
  - Clockwise and Counter-Clockwise Data Shifting via DIR pin
- 30 MHz Data Rate
- Operating Junction Temperature: -40°C to 125°C
- Package 169- Ball 10x10x1.1mm TFBGA

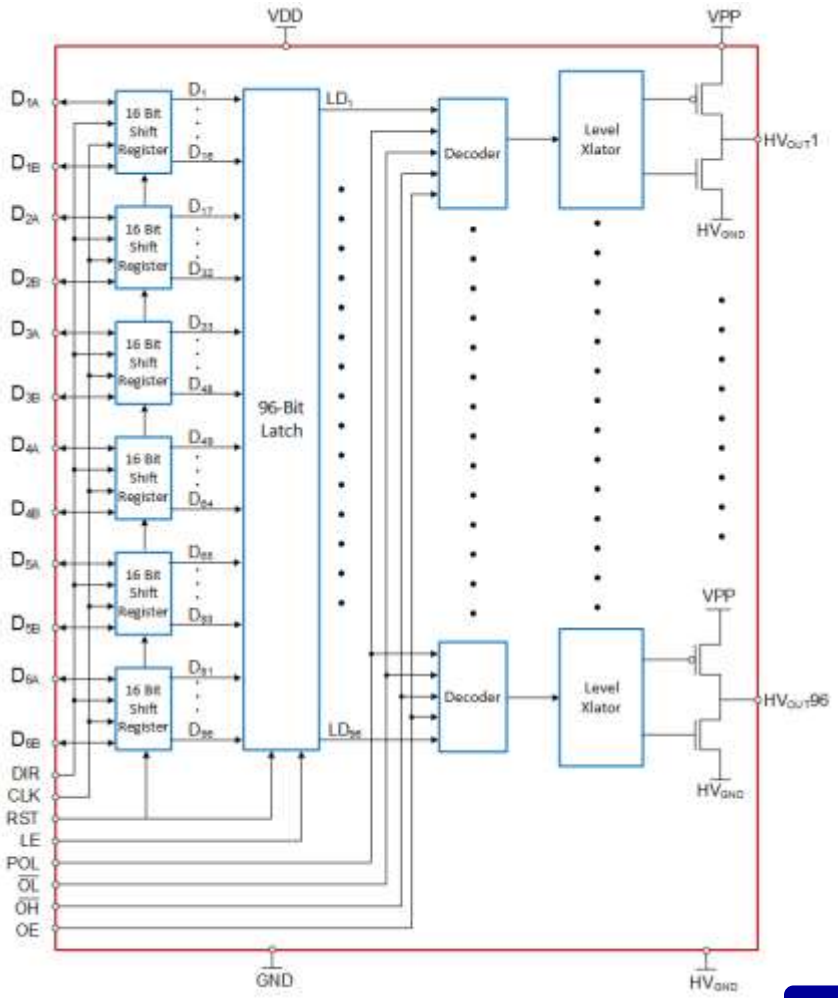

<< BACK

HV583

Online Datasheet

Features:

- 128 High Voltage Channels
  - Up to 80V Operating Output Voltage
  - 30 mA sink/source peak current
- 4 Interleaved 32-bit Shift Registers
  - Clockwise and Counter-Clockwise Data Shifting via DIR pin
- 40 MHz Data Rate
- Operating Junction Temperature: -25°C to 125°C
- Package 169- Ball 10x10x1.1mm TFBGA

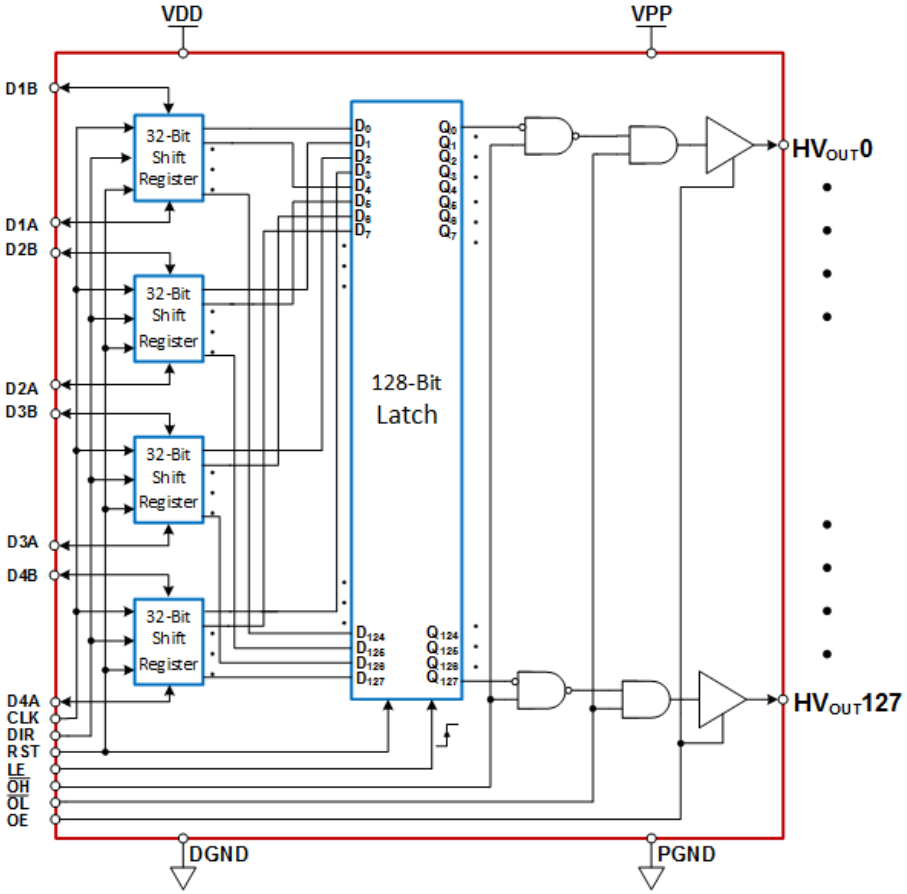

<< BACK

HV66

Online Datasheet

Features:

- 32 push-pull CMOS output up to 60V
- Low power level shifting
- Shift register speed 5.0MHz
- Latched data outputs
- Bidirectional shift register (DIR)
- Backplane output
- Operating Temperature Range: -40°C to +85°C
- Package Option: PQFP-44, PLCC-44

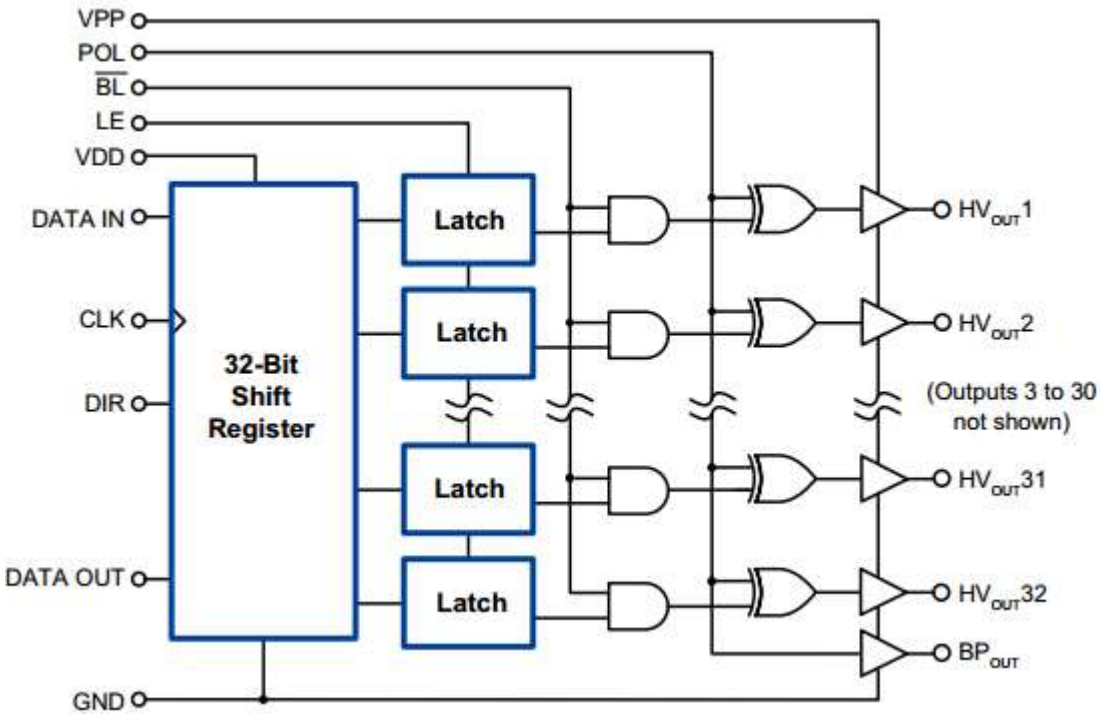

<< BACK

HV6810

Online Datasheet

Features:

- High output voltage 80V
- High speed 5MHz @5.0VDD
- Low power IBB ≤ 0.1mA (all high)
- Active pull down 100µA min @25OC
- Output source current 25mA @60V VBB
- Each device drives 10 lines
- High-speed serially-shifted data input
- 5.0V CMOS-compatible inputs
- Latches on all driver outputs
- Operating Temperature Range: -45°C to +85°C
- Package Option: SOIC-20 (300mil)

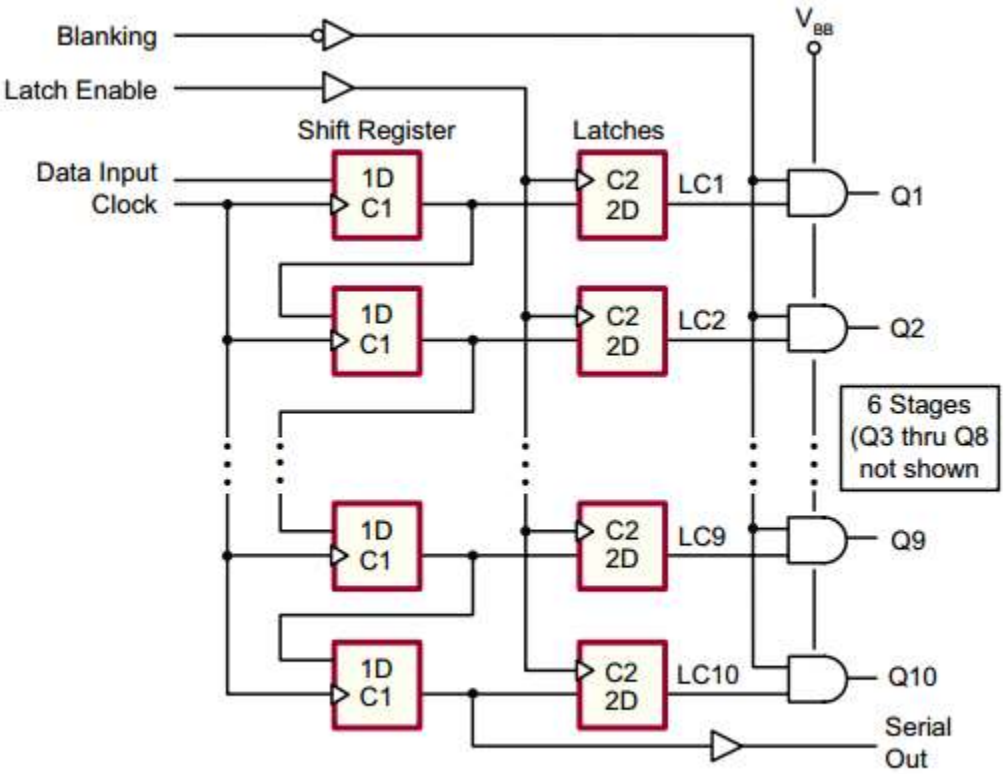

Logic Diagram (positive logic)

<< BACK

HV7224

Online Datasheet

Features:

- Symmetric row drive (reduces latent imaging in ACTFEL displays)
- Output voltage up to +240V
- Low power level shifting
- Source/sink current minimum 70mA
- Shift register speed 3.0MHz
- Pin-programmable shift direction Operating Temperature Range: -40°C to +85°C
- Package Option: PQFP-64

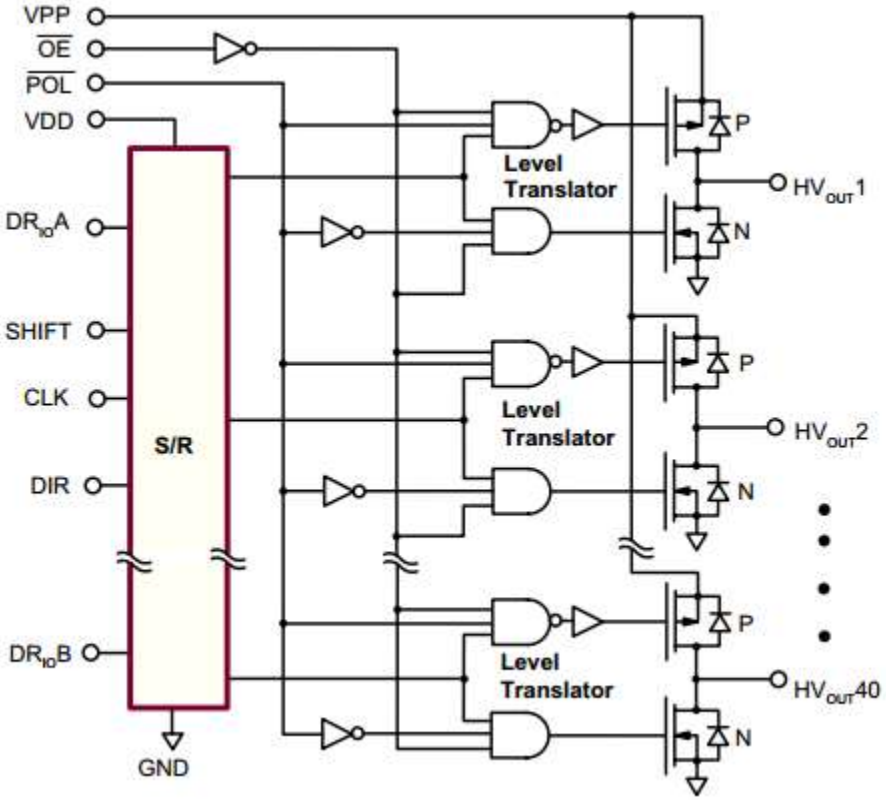

<< BACK

HV7620

Online Datasheet

Features:

- 5.0V logic and 12V supply rail
- Output voltage up to +200V
- Low power level shifting
- Source/sink current minimum 50mA
- 40MHz equivalent data rate
- Latched data outputs
- Forward and reverse shifting options
- Chip select
- Polarity function
- Operating Temperature Range: -40°C to +85°C
- Package Option: PQFP-64

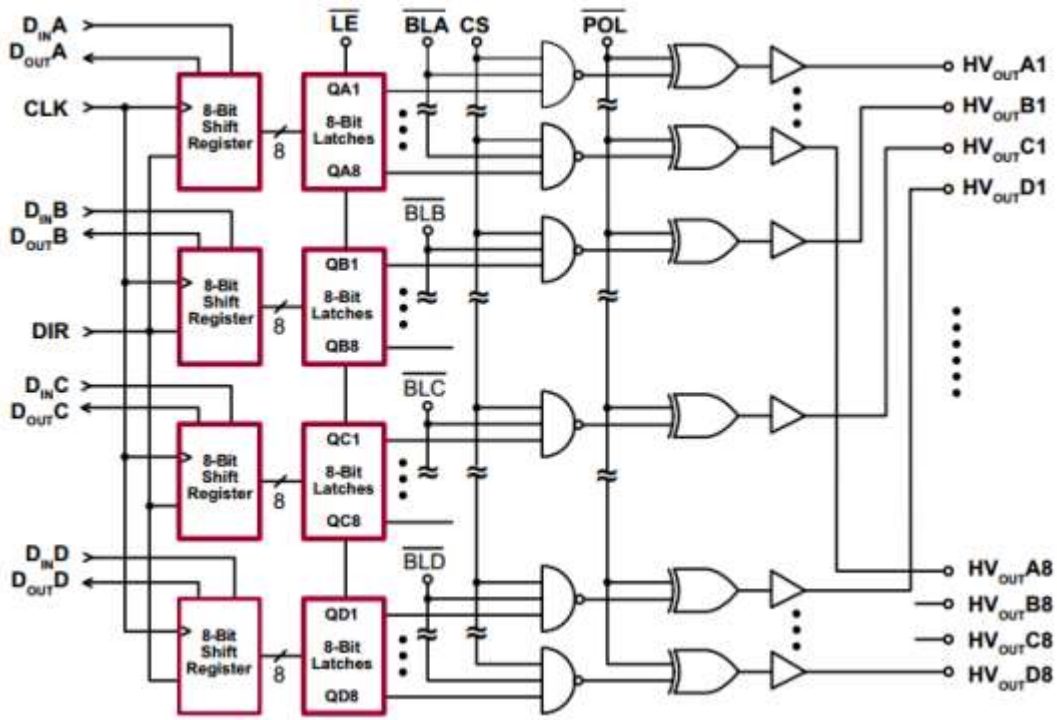

<< BACK

HV9308

Online Datasheet

Features:

- Low power level shifting
- Shift register speed 8.0MHz
- Latched data outputs
- 5.0V CMOS compatible inputs
- Forward and reverse shifting options
- Diode to VPP allows efficient power recovery
- Operating Temperature Range: -40°C to +85°C
- Package Option: PQFP-44

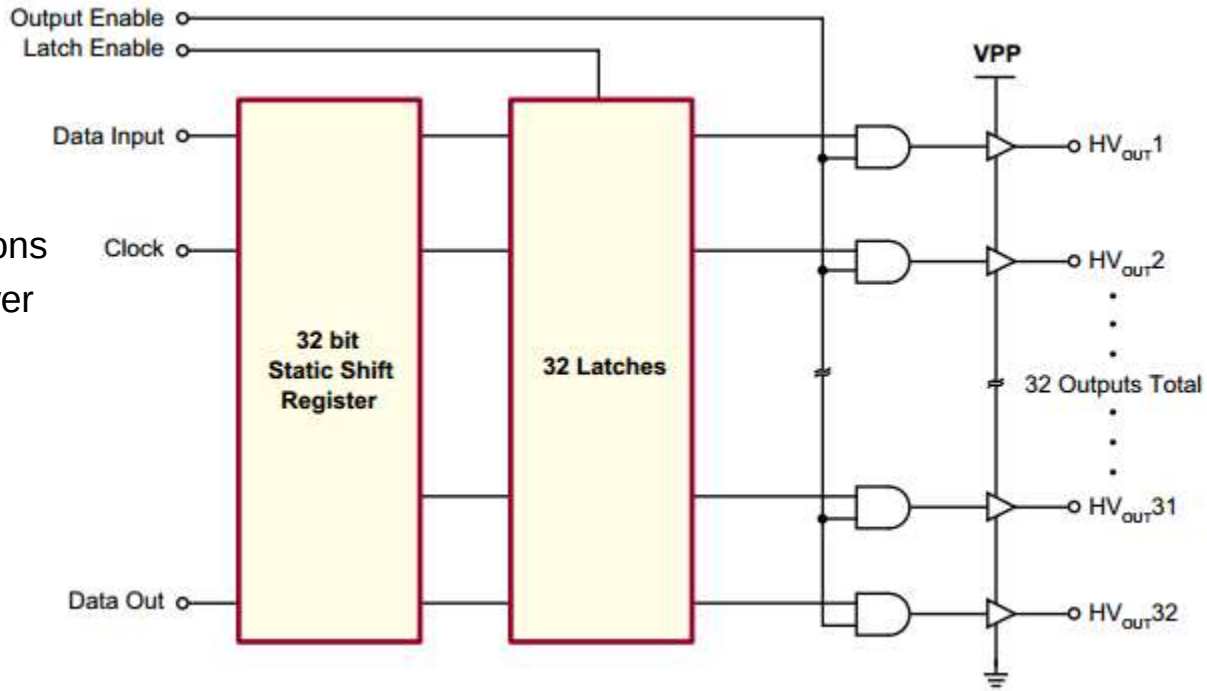

<< BACK

HV9408

Online Datasheet

Features:

- Output voltages up to 80V
- Low power level shifting
- Shift register speed 8.0MHz
- Latched data outputs
- 5.0V CMOS compatible inputs
- Forward and reverse shifting options
- Diode to VPP allows efficient power recovery
- Operating Temperature Range: -40°C to +85°C
- Package Option: PQFP-44

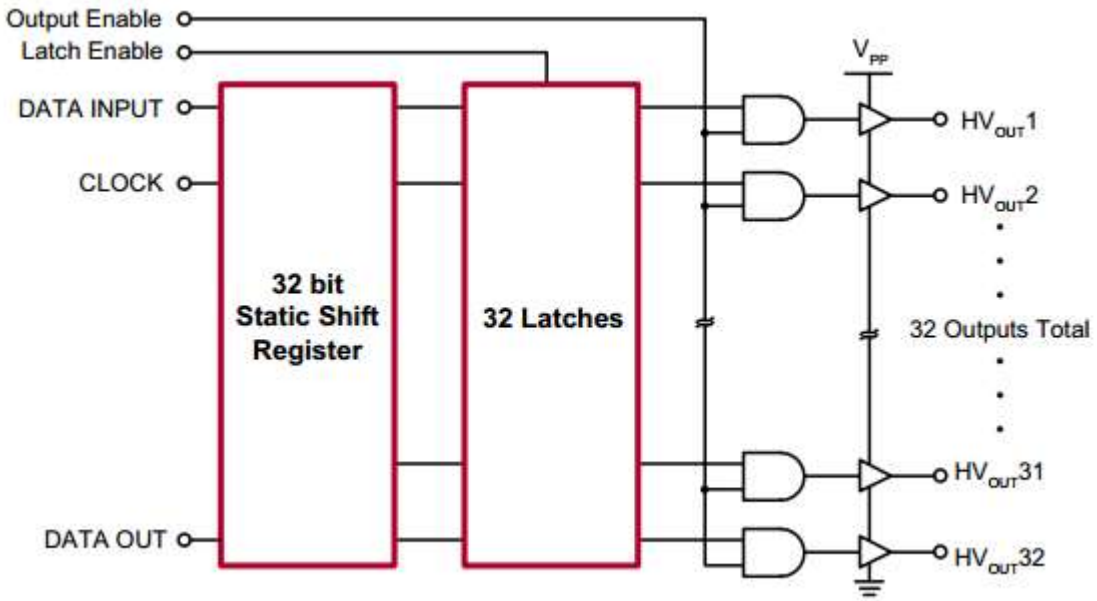

<< BACK

HV9808

Online Datasheet

Features:

- Output voltages up to 80V
- Low power level shifting
- Shift register speed 8.0MHz
- Latched data outputs
- 5.0V CMOS compatible inputs
- Forward and reverse shifting options
- Diode to VPP allows efficient power recovery
- Operating Temperature Range: -40°C to +85°C
- Package Option: PQFP-44

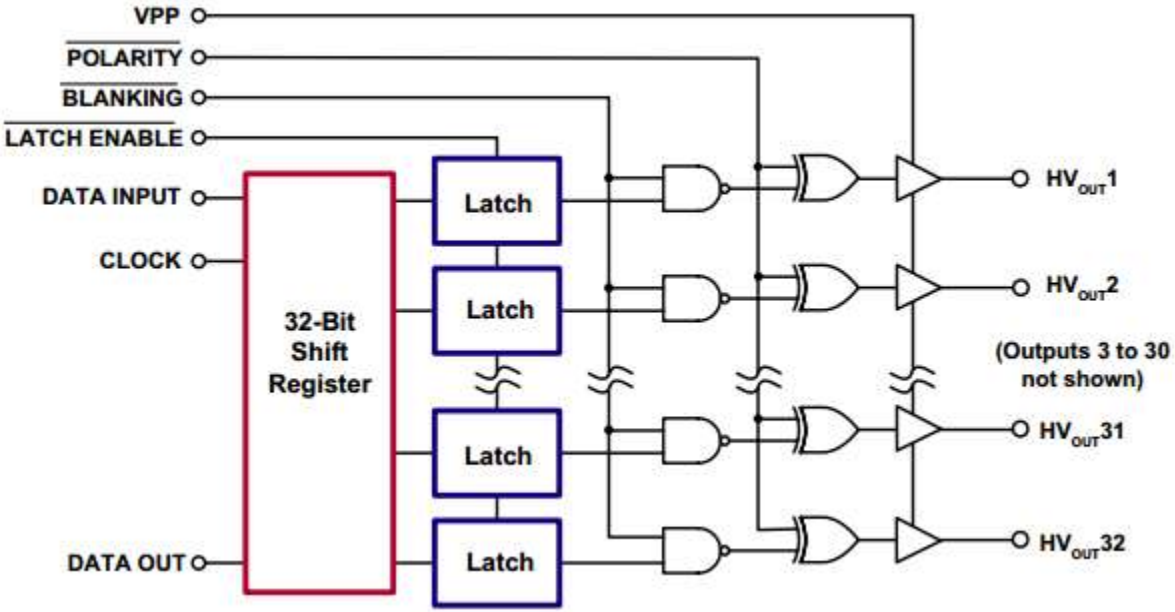

<< BACK

HV9921/2/3

Online Datasheet

Features:

- Constant Output Current
  - 20mA HV9921
  - 50mA HV9922
  - 30mA HV9923
- Universal 85 - 265VAC Operation
- Fixed OFF-Time Buck Converter
- Internal 475V Power MOSFET
- Operating Temperature Range: -40ºC to +125ºC
- Package Options: TO-92, SOT-89

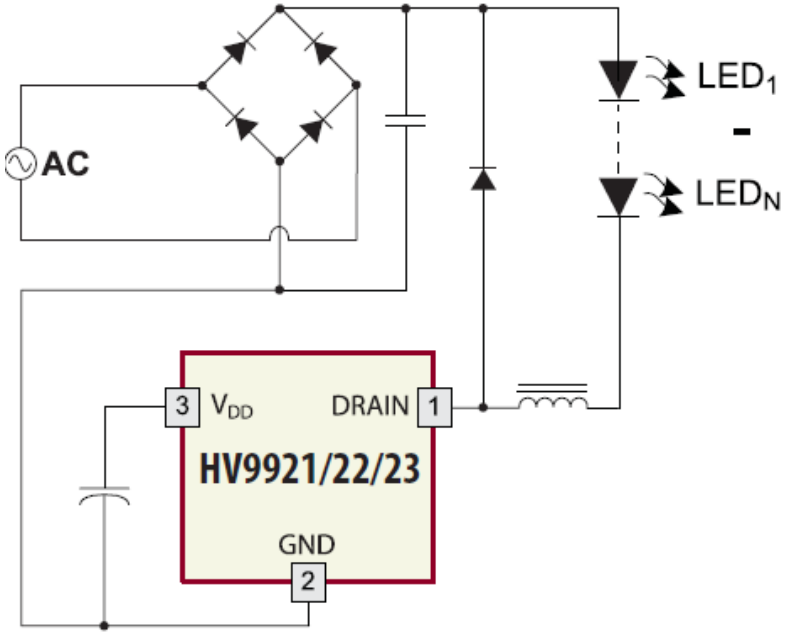

<< BACK

HV9910B

Online Datasheet

Features:

- Switch mode controller for single switch LED drivers
- Open loop peak current controller
- Internal 8.0 to 450V linear regulator
- Constant frequency or constant off-time operation
- Linear and PWM dimming capability
- Requires few external components for operation
- Operating Temperature Range:

  -40ºC to +125ºC
- Package Options: SOIC-8, SOIC-16

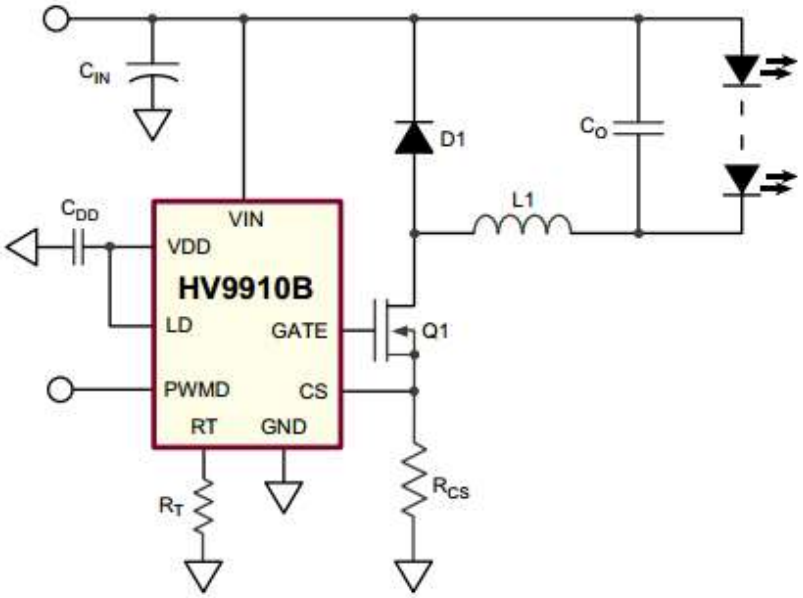

<< BACK

HV9910C

Online Datasheet

Features:

- Switch mode controller for single switch LED drivers
- Open loop peak current controller
- Internal 15 to 450V linear regulator
- Constant frequency or constant off-time operation
- Linear and PWM dimming capability
- Requires few external components for operation
- Over-temperature protection
- Operating Temperature Range: -40ºC to +125ºC
- Package Options: SOIC-8, SOIC-16, SOIC-8 w/HS

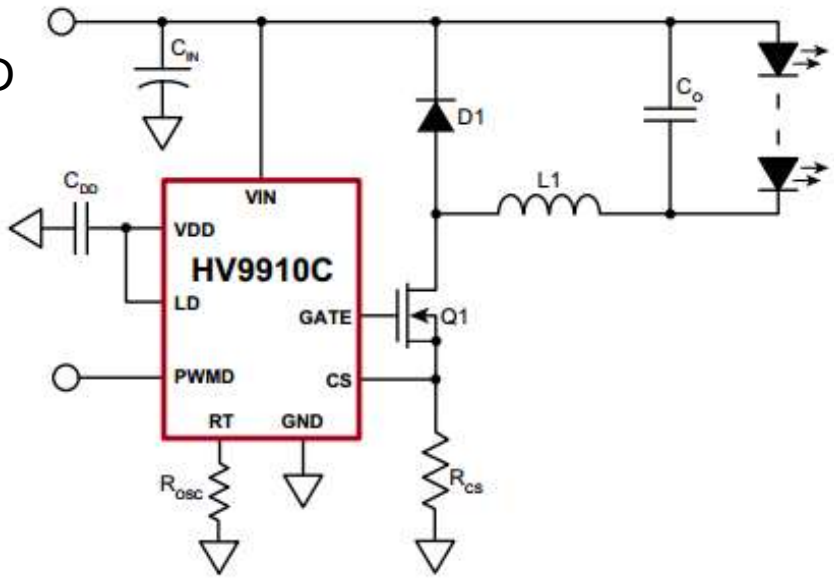

<< BACK

HV9861A

Online Datasheet

Features:

- Fast average current control
- Programmable constant off-time switching
- PWM / linear dimming input
- Output short circuit protection with skip mode
- Operating Temperature Range: -40ºC to +125ºC
- Package Options: SOIC-8, SOIC-16

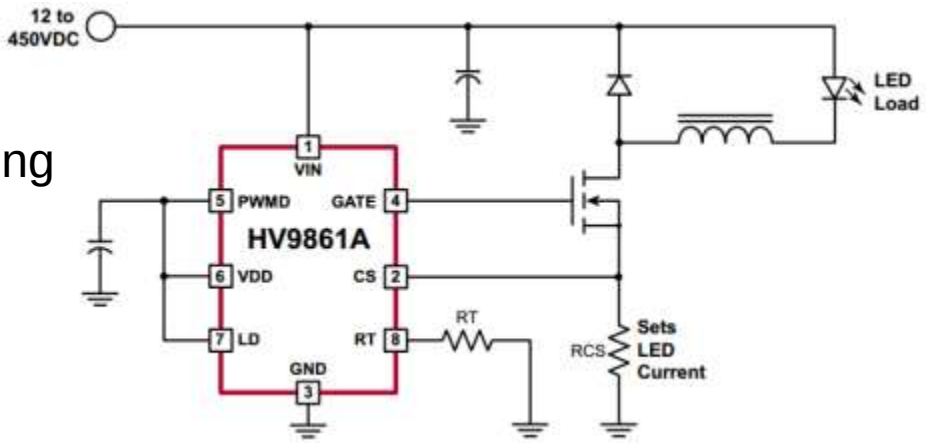

<< BACK

HV9803

Online Datasheet

Features:

- Fast average current control
- Correction for propagation delay and offs voltage
- Fixed off-time switching mode
- Linear dimming input
- PWM dimming input
- Output short circuit protection with programmable skip mode
- Input under-voltage shutdown
- Operating Temperature Range: -40ºC to +150ºC
- Package Options: SOIC-8

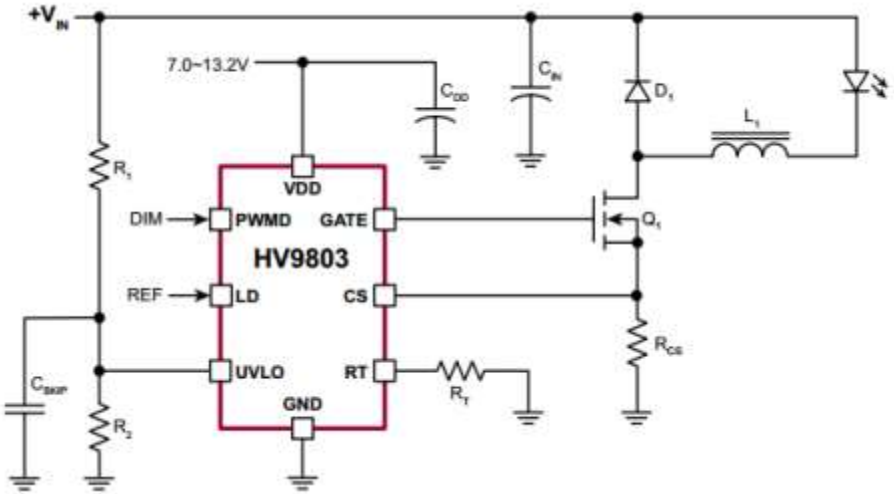

<< BACK

HV9801A

Online Datasheet

Features:

- Four level switch dimming
- Very accurate current regulator
- Output over-current/short circuit protection
- IC over-temperature protection
- Operating Temperature Range: -40ºC to +125ºC
- Package Option: SOIC-8, SOIC-16

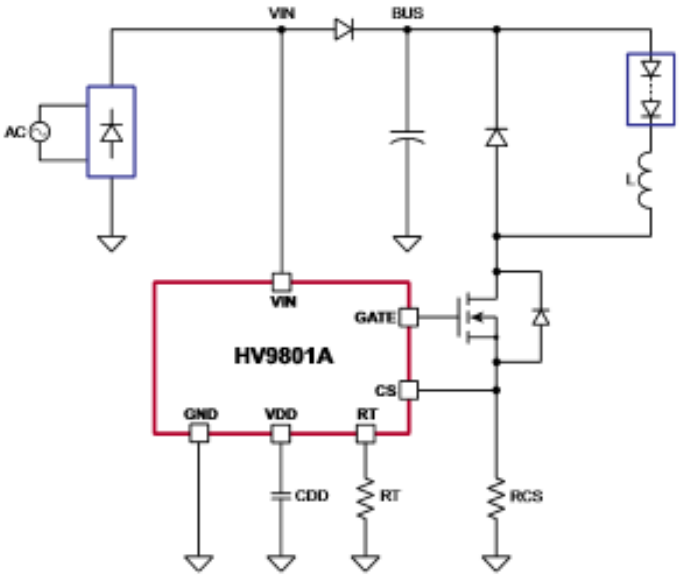

<< BACK

HV9803B

Online Datasheet

Features:

- Fast average current control
- Correction for propagation delay and offset voltage
- Fixed off-time switching mode
- Linear dimming input
- PWM dimming input
- Output short circuit protection
- Input under-voltage shutdown
- Operating Temperature Range: -40ºC to +125ºC
- Package Option: SOIC-8

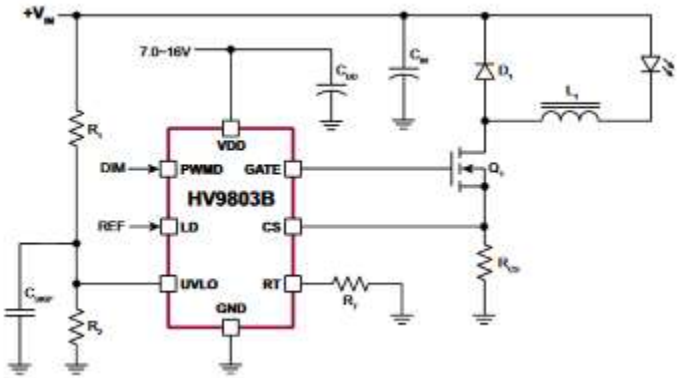

<< BACK

HV9805

Online Datasheet

Features:

- Provides True DC Light and protects load from line voltage transients
- Driver topology includes: Boundary Conduction Mode (BCM) Boost Converter with Power Factor Correction
  - High Power Factor(98%+)
  - High Efficiency (90%+)
- Linear Post-Regulator with Low Overhead Voltage
  - Zero LED Current/Brightness Ripple
  - Overvoltage Protection for LEDs
  - High Efficiency
  - ±4% Reference over Temperature
- Simple V_{DD} Supply: No Auxiliary Winding Required
  - Boost Converter Cascode Switch: Internal Switch rated at 700 mA peak
  - Supports up to 25W at 120VAC
  - Supports up to 50W at 230VAC
- Compatibility with SEPIC Topology for Low Output Voltage Applications

Typical Application Circuit

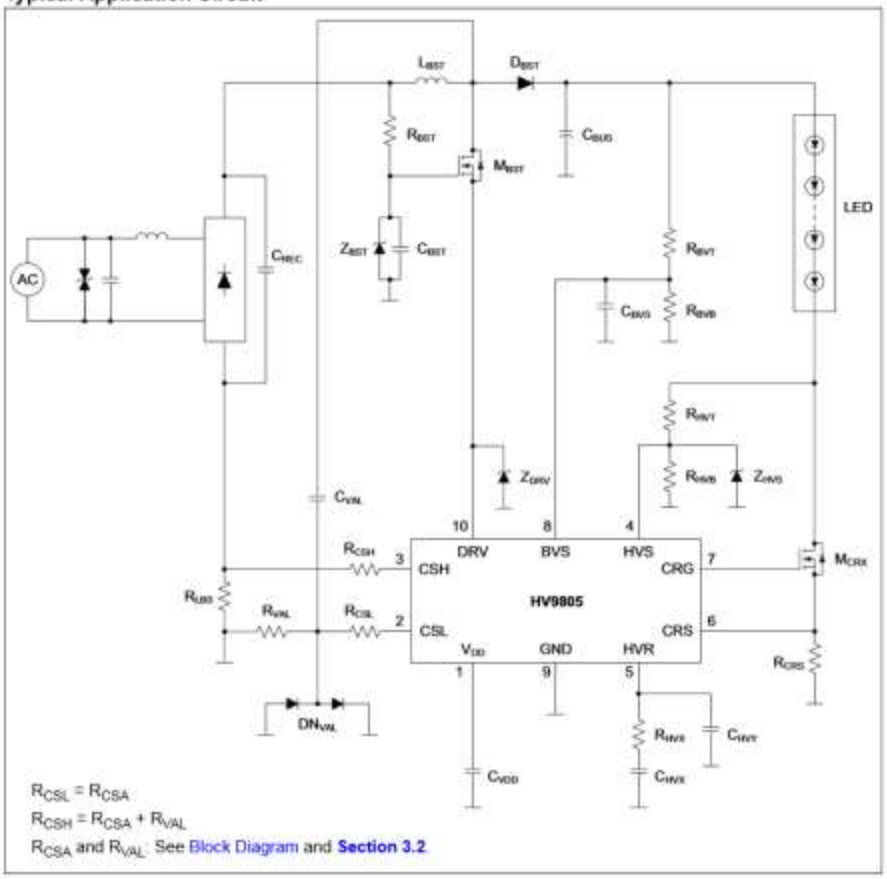

<< BACK

HV9925

Online Datasheet

Features:

- Programmable output current to 50mA
- PWM dimming / enable
- Universal 85 - 264VAC operation
- Fixed off-time buck converter
- Internal 475V power MOSFET
- Over-temperature protection with hysteresis
- Operating Temperature Range: -40ºC to +125ºC
- Package Option: SOIC-8 w/Heat Slug

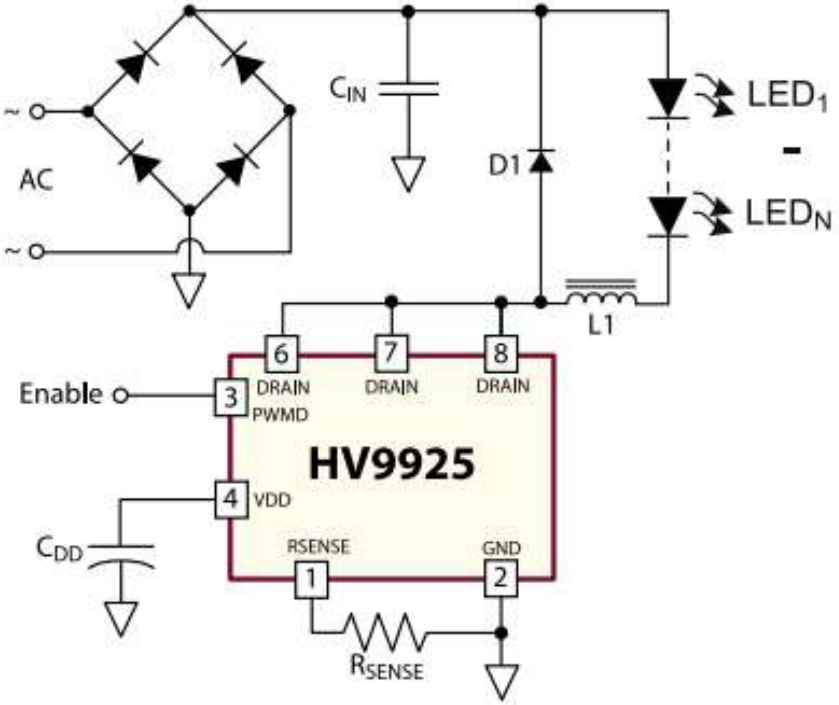

<< BACK

HV9931

Online Datasheet

Features:

- Constant output current
- Large step-down ratio
- Unity power factor
- Low input current harmonic distortion
- Fixed frequency or fixed off-time operation
- Internal 450V linear regulator
- Input and output current sensing
- Input current limit
- Enable, PWM and phase dimming
- Operating Temperature Range: -40ºC to +125ºC
- Package Option: SOIC-8 w/Heat Slug

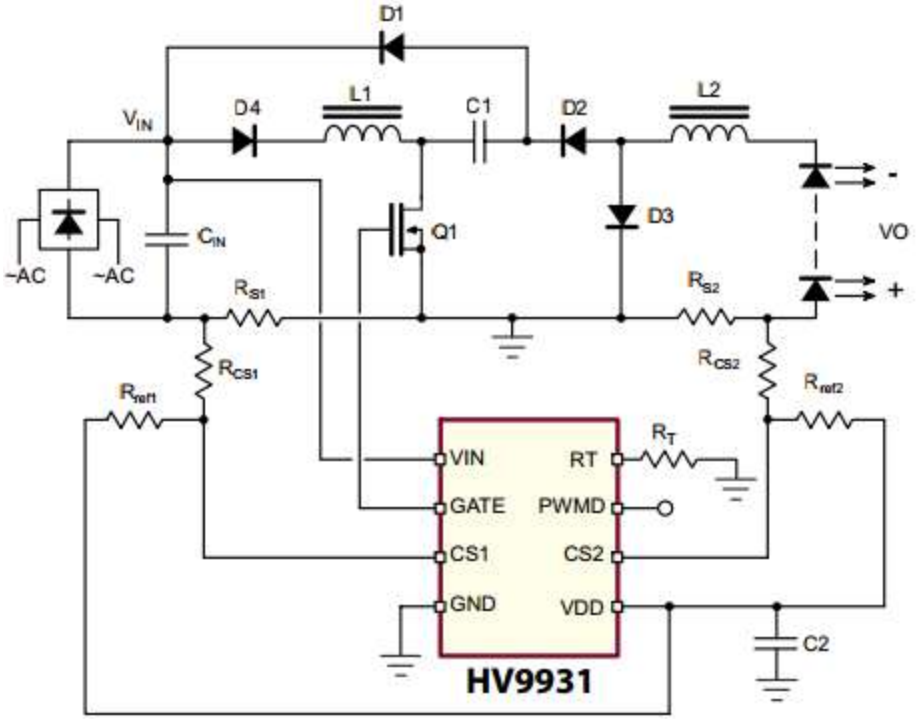

<< BACK

HV98100/101

Non-Dimmable, Off-line, Buck-Boost LED Drivers with high PF & low THD

Online Datasheet

Features:

- Good LED Current Regulation
  - Better than 5% accuracy
- Valley Switching Buck-Boost Converter with Power Factor Correction (PFC)
  - 0.97 Power Factor (typical)
  - 5% Total Harmonic Distortion (THD) (typical)
- Uses a Standard Off-the-Shelf Inductor
  - No auxiliary winding required
- Single Input Voltage Range
  - HV98100: $110V_{AC}$±15%
  - HV98101: $230V_{AC}$±15%
- Supports 5W-15W Output Power
- Space-saving SOT-23-6L Package

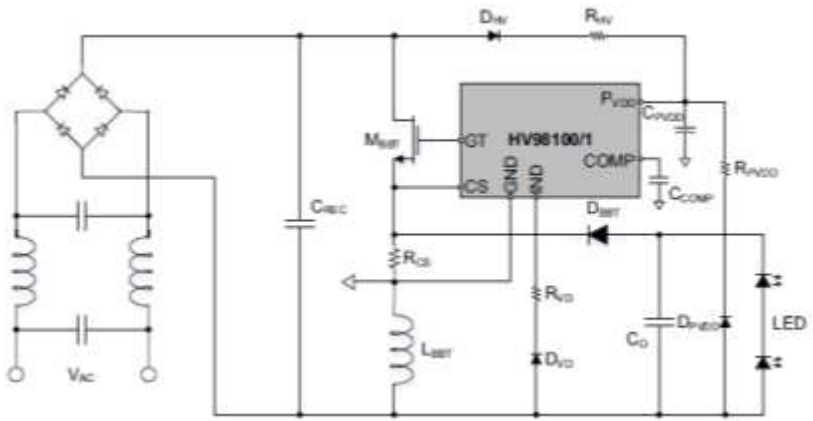

<< BACK

HV9961

Online Datasheet

Features:

- Fast average current control
- Programmable constant off-time switching
- Linear dimming input
- PWM dimming input
- Output short circuit protection with skip mode
- Operating Temperature Range: -40ºC to +125ºC
- Package Option: SOIC-8, SOIC-16

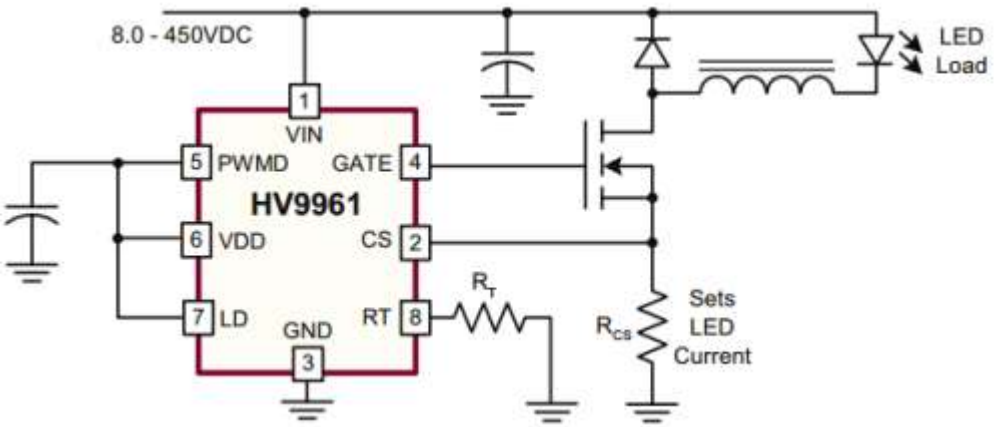

<< BACK

HV9963

Online Datasheet

Features:

- Switch mode controller for single switch converters: Buck, Boost, Buck-boost and SEPIC
- High output current accuracy
- High PWM dimming ratio (>5000:1)
- Internal 40V linear regulator
- Internal ±2% voltage reference
- Constant frequency operation with sync capability
- Programmable soft start
- 10V GATE drivers
- Hiccup mode protection for both short circuit and open circuit conditions
- Operating Temperature Range:
  -40ºC to +150ºC
- Package Options: SOIC-16

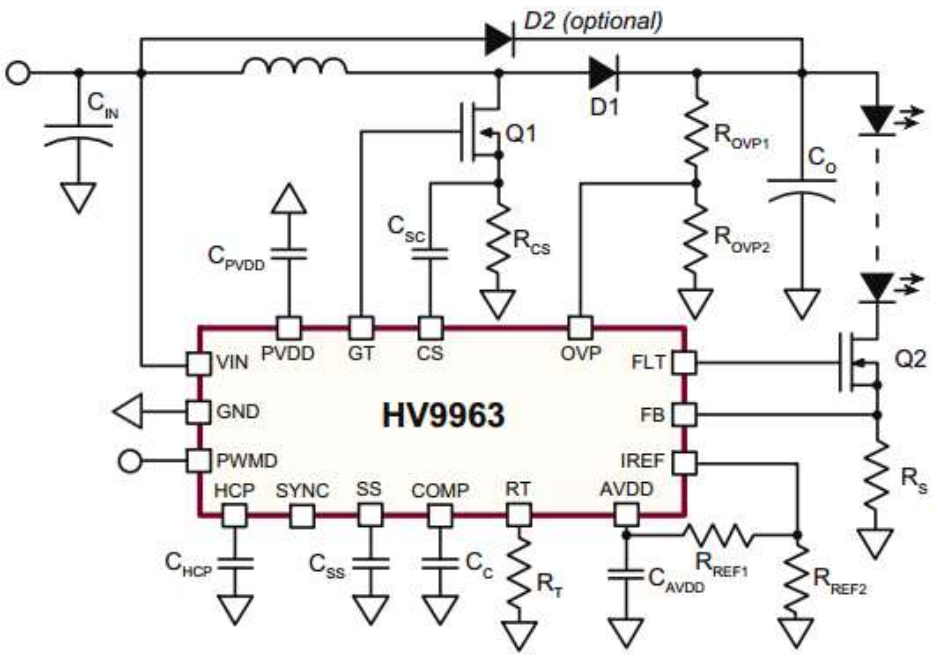

<< BACK

HV9911

Online Datasheet

Features:

- Switch mode controller for single switch drivers: Buck, Boost, Buck-boost, and SEPIC
- Closed loop control of output current
- High PWM dimming ratio
- Programmable slope compensation
- Enable & PWM dimming
- Output short circuit & over voltage protection
- Synchronization capability
- Programmable MOSFET current limit
- Operating Temperature Range: -40ºC to +125ºC
- Package Option: SOIC-8, SOIC-16

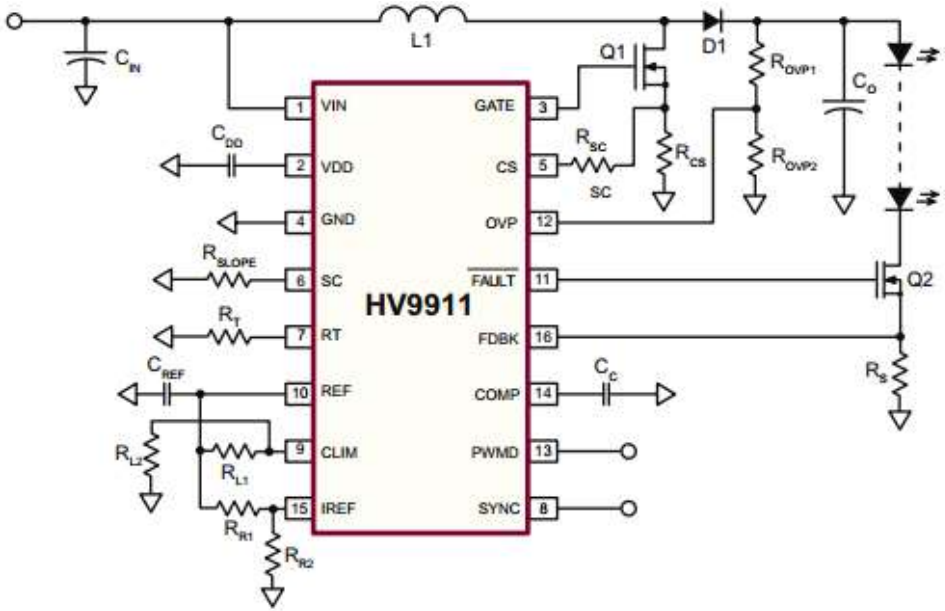

<< BACK

HV9912

Online Datasheet

Features:

- Switch mode controller for single switch drivers: Buck, Boost, Buck-boost, and SEPIC
- Works with high side current sensors
- Closed loop control of output current
- High PWM dimming ratio
- Programmable slope compensation
- Linear & PWM dimming
- Hiccup mode protection for both short circuit and open circuit conditions
- Synchronization capability
- Operating Temperature Range: -40ºC to +125ºC
- Package Option: SOIC-16

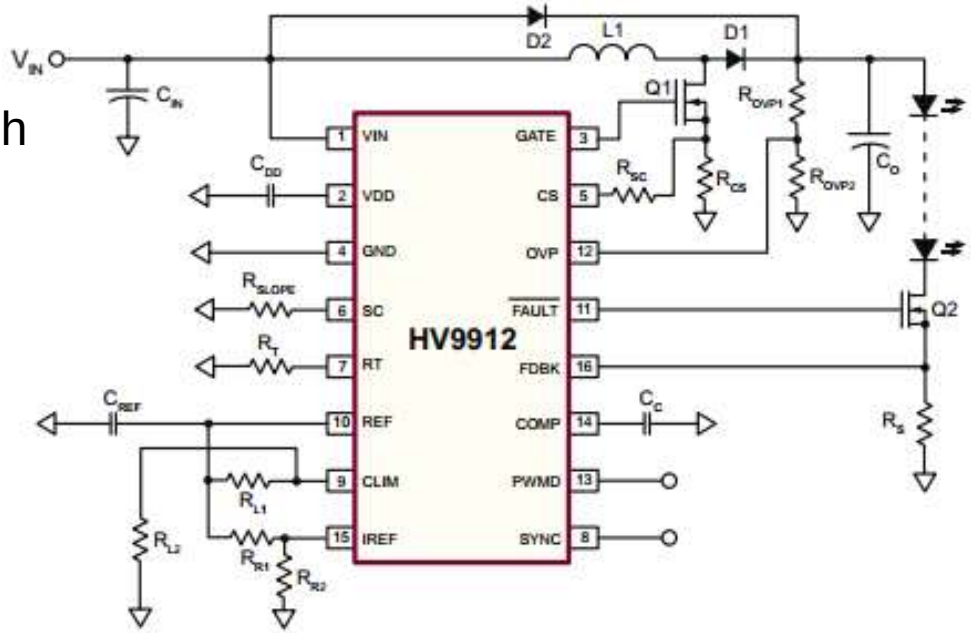

<< BACK

HV9918

Online Datasheet

Features:

- Hysteretic control with high-side current sensing
- Integrated 40V 1.0Ω MOSFET
- >90% Efficiency
- Wide input voltage range: 4.5 to 40V
- ±5% LED current accuracy
- Up to 2.0MHz switching frequency
- Adjustable constant LED current
- Analog or PWM control signal for PWM dimming
- Over-temperature protection
- Operating Temperature Range: -40ºC to +125ºC
- Package Option: WDFN-8 (3x3)

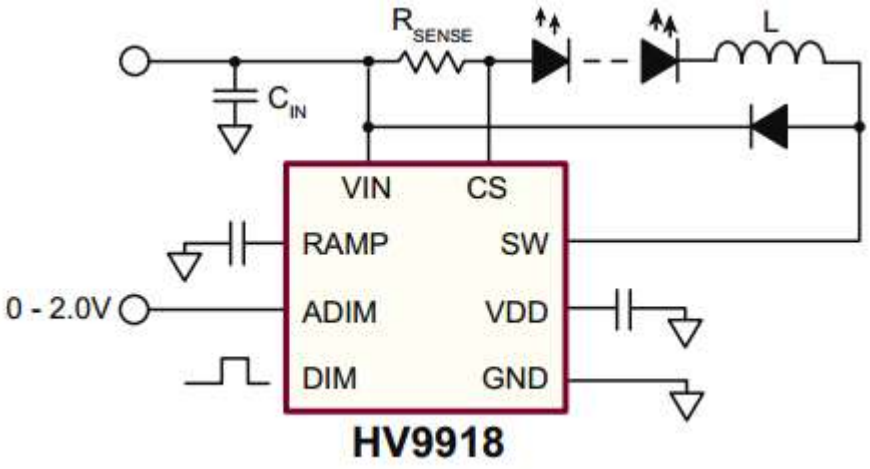

<< BACK

HV9919B

Online Datasheet

Features:

- Hysteretic control with high-side current sensing
- Wide input voltage range: 4.5 to 40V
- >90% Efficiency
- Typical ±5% LED current accuracy
- Up to 2.0MHz switching frequency
- Adjustable constant LED current
- Analog or PWM control signal for PWM dimming
- Over-temperature protection
- Operating Temperature Range: -40ºC to +125ºC
- Package Option: WDFN-8 (3x3)

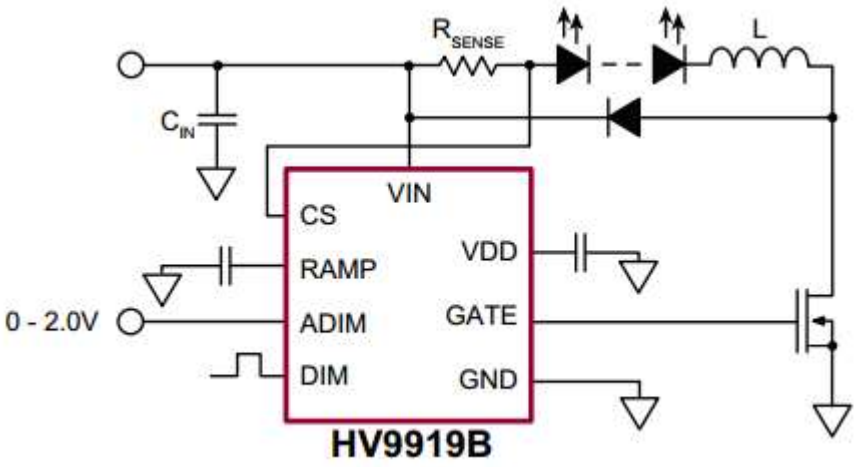

<< BACK

HV9930

Online Datasheet

Features:

- Constant output current LED driver
- Steps output voltage up or down
- Low EMI
- Variable frequency operation
- Internal 8.0 - 200V linear regulator
- Input and output current sensing
- Input current limit
- Enable & PWM dimming
- Operating Temperature Range: -40ºC to +125ºC
- Package Option: SOIC-8

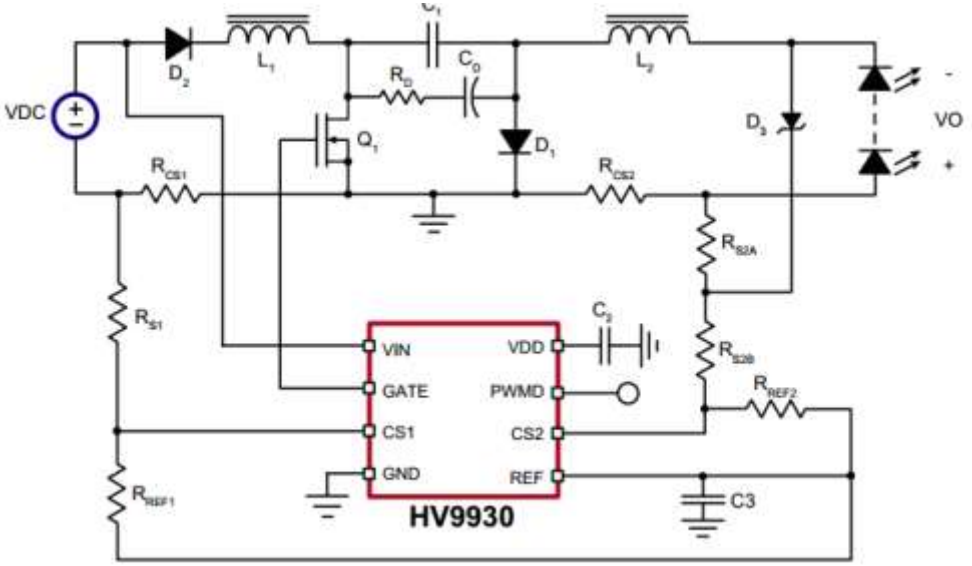

<< BACK

HV9967B

Online Datasheet

Features:

- 3% accurate LED current
- Integrated 60V, 0.8Ω MOSFET
- Low sensitivity to external component variation
- Single resistor LED current setting
- Fixed off-time control
- PWM dimming input
- Output short circuit protection with skip mode
- Over-temperature protection
- Operating Temperature Range: -40ºC to +150ºC
- Package Options: DFN-8, MSOP-8

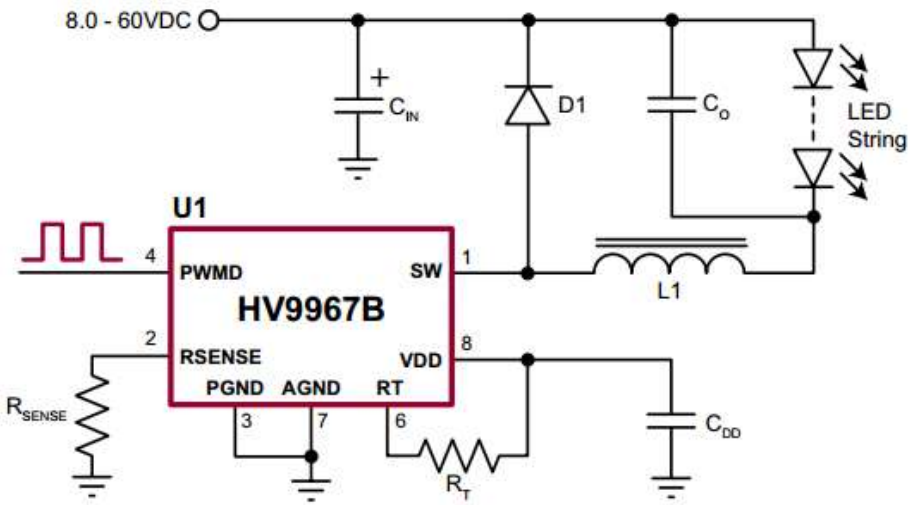

<< BACK

HV9980

Online Datasheet

Features:

- Integrated 200V, 25Ω (typ.) MOSFETs
- Programmable output current to 80mA per channel
- TTL compatible PWM dimming inputs
- 3-Phase synchronous operation
- Leading edge blanking
- Short circuit protection with skip mode
- Over-temperature protection
- Operating Temperature Range: -40ºC to +150ºC
- Package Options: SOIC-24 (300mil)

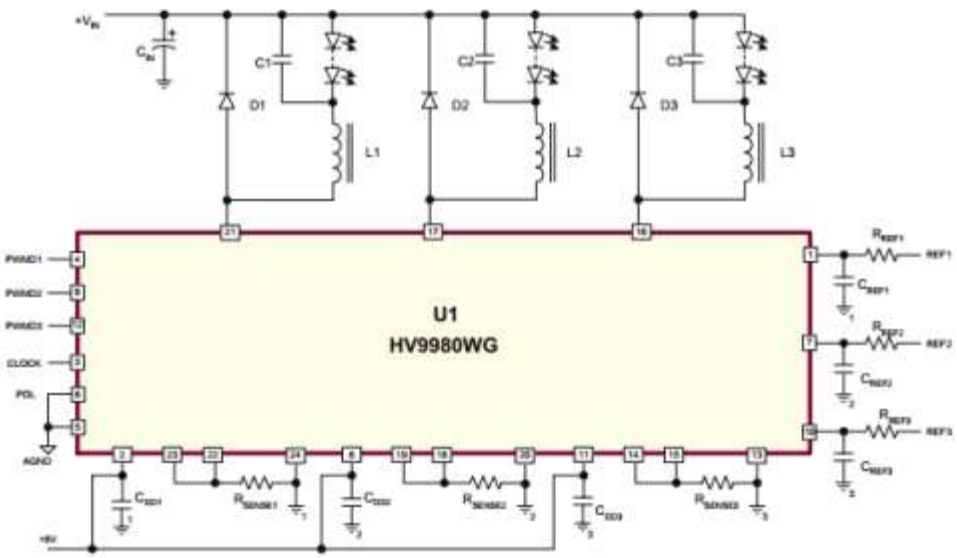

<< BACK

HV9120

Online Datasheet

Features:

- 10 to 450V input voltage range
- <1.3mA supply current
- >1.0MHz clock
- >20:1 dynamic range @ 500KHz
- 49% Maximum duty cycle version
- Low internal noise
- Operating Temperature Range: -40ºC to +125ºC
- Package Options: SOIC-16, PDIP-16

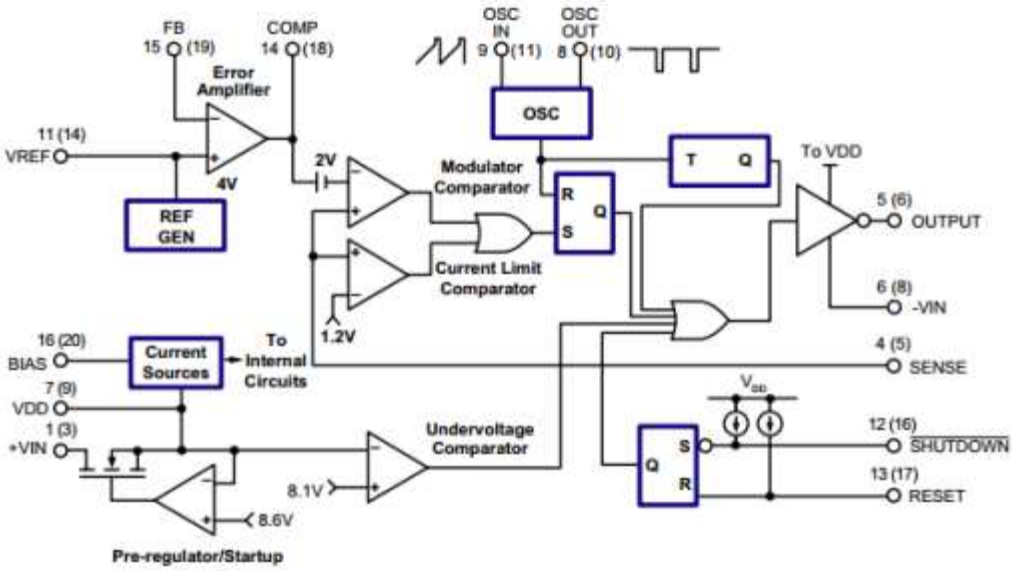

<< BACK

HV9123

Online Datasheet

Features:

- 10 to 450V input voltage range
- <1.3mA supply current
- >1.0MHz clock
- >20:1 dynamic range @ 500KHz
- 99% Maximum duty cycle version
- Low internal noise
- Operating Temperature Range: -40ºC to +125ºC
- Package Options: SOIC-16, PDIP-16

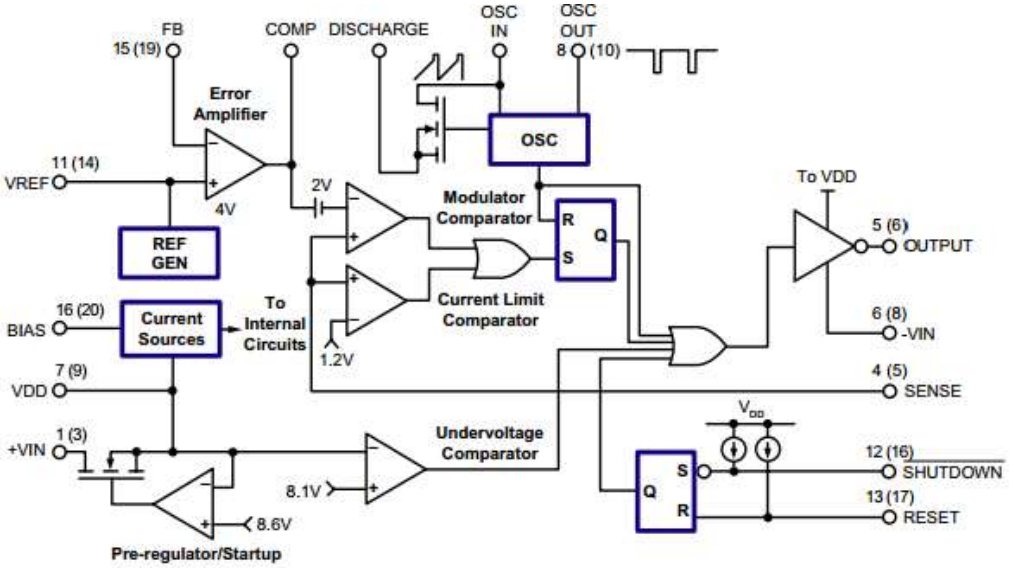

<< BACK

AT9917

Online Datasheet

Features:

- Switch mode controller for boost, SEPIC & buck converters
- Closed loop control of output current
- Constant frequency operation with programmable slope compensation
- Linear and PWM dimming
- Programmable jitter to reduce EMI
- Output short circuit & over voltage protection
- Programmable hiccup timer
- Temperature fold-back with external NTC resistor
- Meets AEC-Q100 requirements
- Operating Temperature Range: -40ºC to +125ºC
- Package Option: TSSOP-24

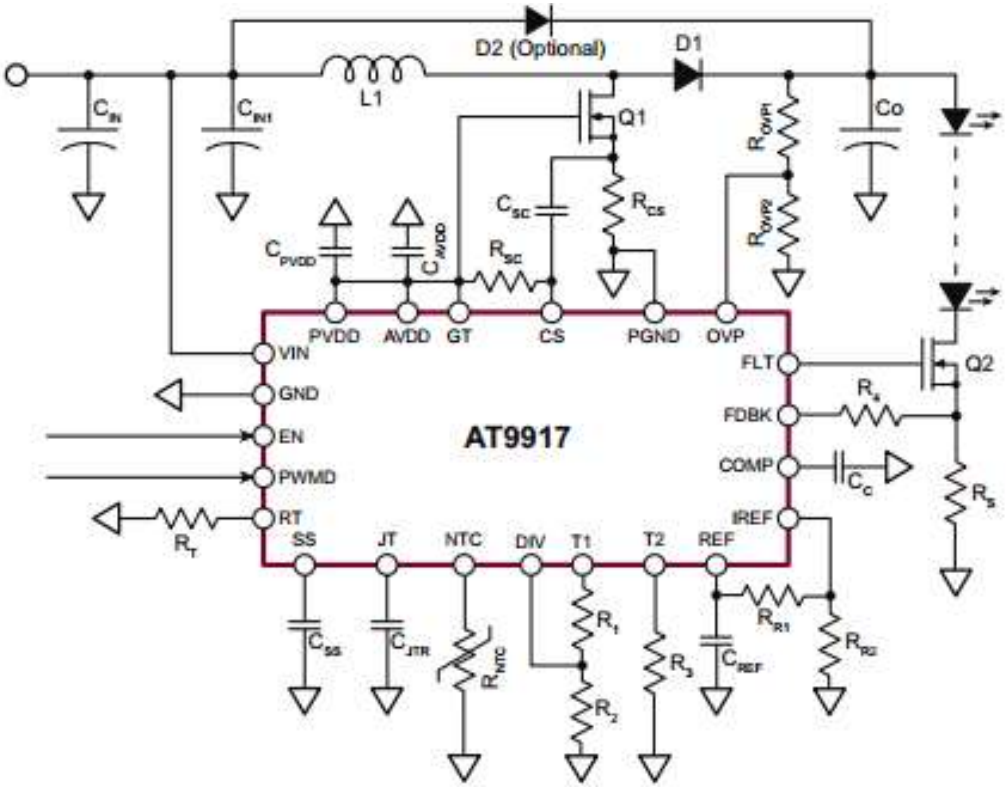

<< BACK

AT9919

Online Datasheet

Features:

- Hysteretic control with high-side current sensing
- Wide input voltage range: 4.5 to 40V
- >90% Efficiency
- Typical ±5% LED current accuracy
- Up to 2.0MHz switching frequency
- Adjustable constant LED current
- Analog or PWM control signal for PWM dimming
- Over-temperature protection
- Meets AEC-Q100 requirements
- Operating Temperature Range: -40ºC to +125ºC
- Package Option: WDFN-8 (3x3)

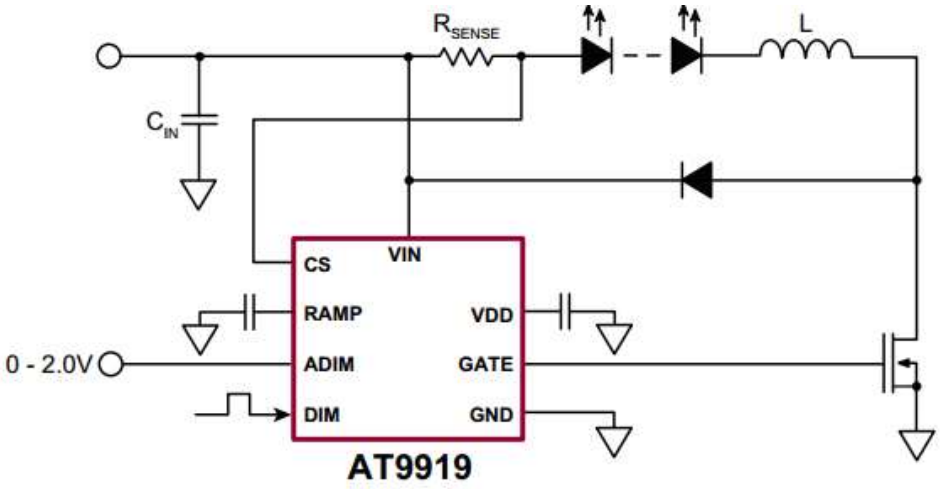

<< BACK

AT9932

Online Datasheet

Features:

- Constant output current
- Steps output voltage up or down
- Externally programmable fixed switching frequency
- Temperature fold-back with external NTC resistor
- Internal 40V voltage regulator
- ±1A MOSFET gate driver
- Short LED & Open LED protection
- Input under voltage protection
- Enable & PWM dimming
- Trimmed reference (±3% accurate)
- Meets AEC-Q100 requirements
- Operating Temperature Range: -40ºC to +125ºC
- Package Option: TSSOP-24

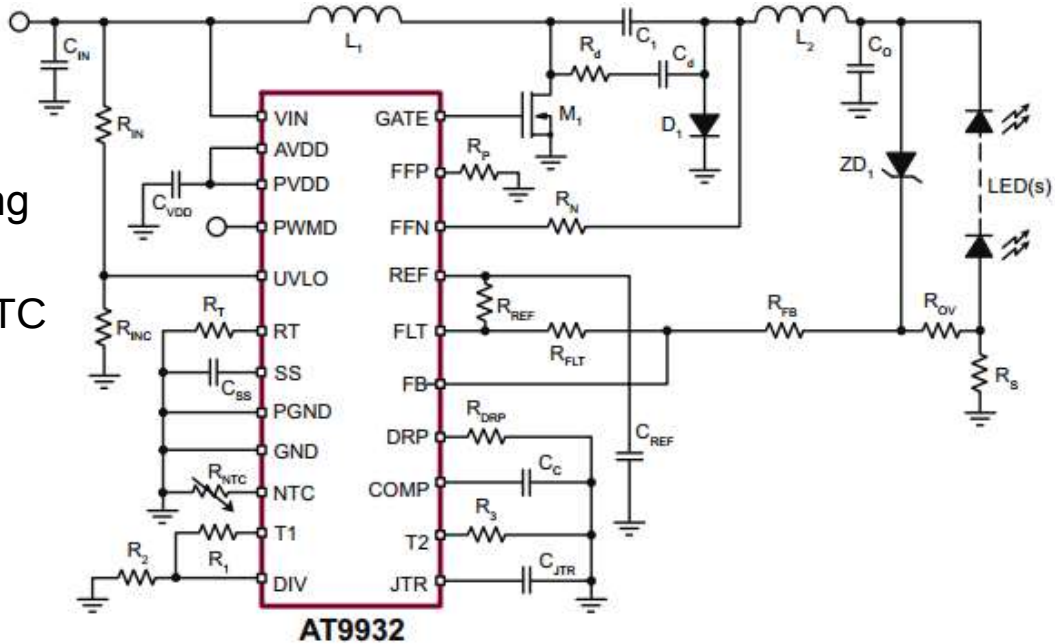

<< BACK

AT9933

Online Datasheet

Features:

- Constant current LED Driver
- Steps input voltage up or down
- Low EMI
- Variable frequency operation
- Internal 75V linear regulator
- Input and output current sensing
- Input current limit
- Enable & PWM dimming
- Meets AEC-Q100 requirements
- Operating Temperature Range: -40ºC to +125ºC
- Package Option: TSSOP-24

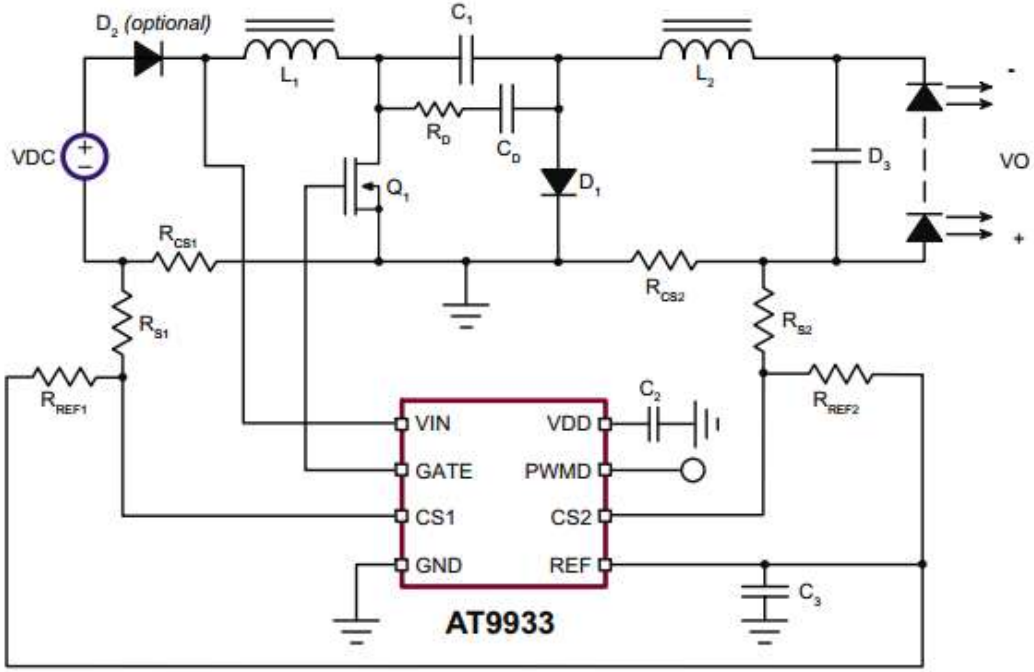

<< BACK

CL2

Online Datasheet

Features:

- 5.0 to 90V operating range (VA-B)
- 20mA ±10% at 5.0 - 90V
- 0.01%/°C typical temperature coefficient
- Can be paralleled for higher current
- Operating Temperature Range: -40ºC to +125ºC
- Package Options: SOT-89, TO-252 (D-PAK), TO-92

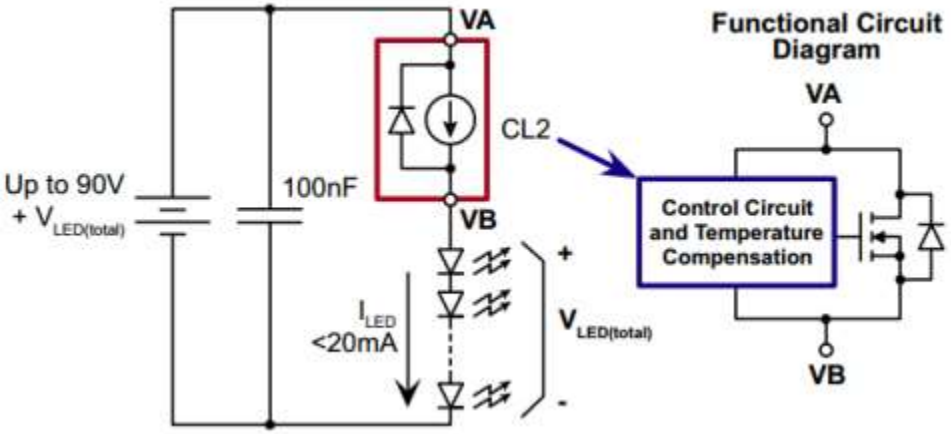

<< BACK

CL25

Online Datasheet

Features:

- 5.0 - 90V operating range (VA-B)
- 25mA ±10% at 5.0 - 90V
- 0.01%/°C typical temperature coefficient
- No external components (two terminal device)
- Can be paralleled for higher current
- Operating Temperature Range: -40ºC to +125ºC
- Package Options: SOT-89, TO-92

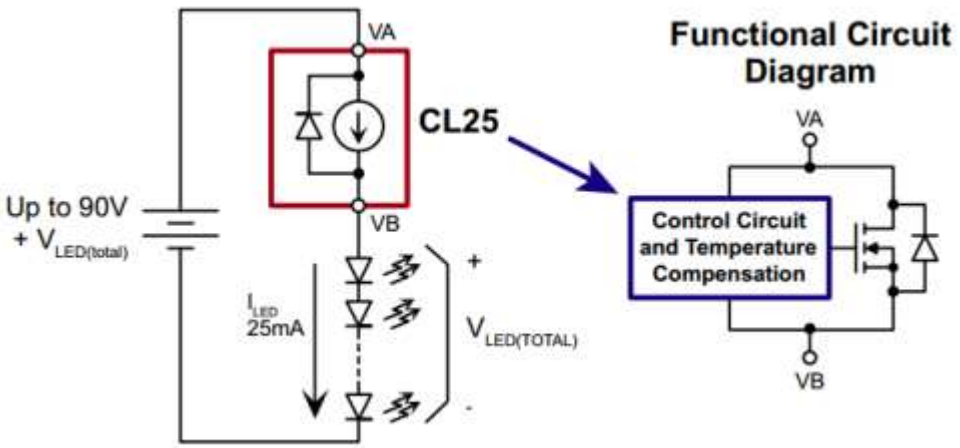

<< BACK

CL220

Online Datasheet

Features:

- 5.0 to 220V operating range (VA-B)
- 20mA ±10% at 5.0 - 160V
- 0.01%/°C typical temperature coefficient
- Can be paralleled for higher current
- Operating Temperature Range: -40ºC to +125ºC
- Package Options: TO-252 (DPAK), TO-220

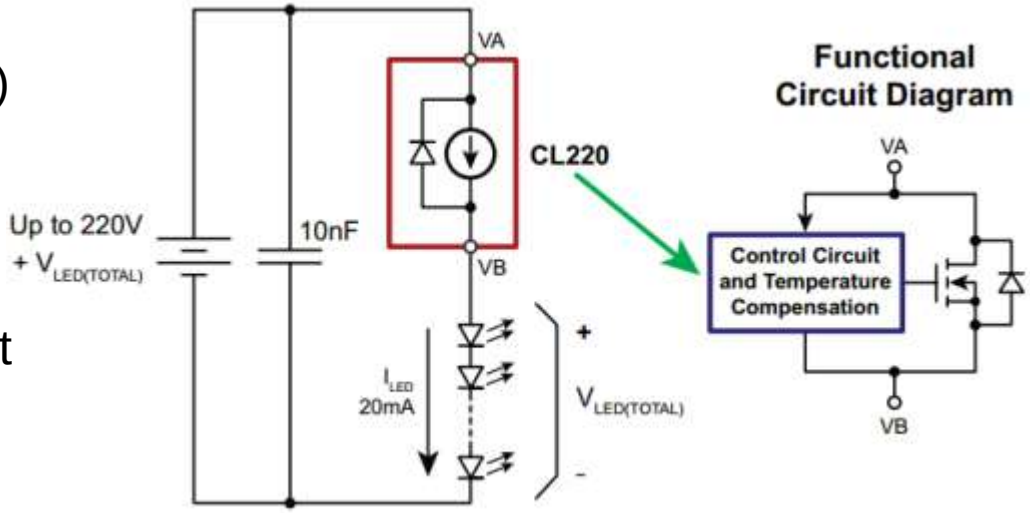

<< BACK

CL320

Online Datasheet

Features:

- ±6.0% current accuracy @ 4.0 -15V
- 90V standoff voltage
- Separate enable pins for each channel allow for PWM dimming
- Over-temperature protection
- Operating Temperature Range: -40ºC to +125ºC
- Package Options: SOIC-8 w/Heat Slug

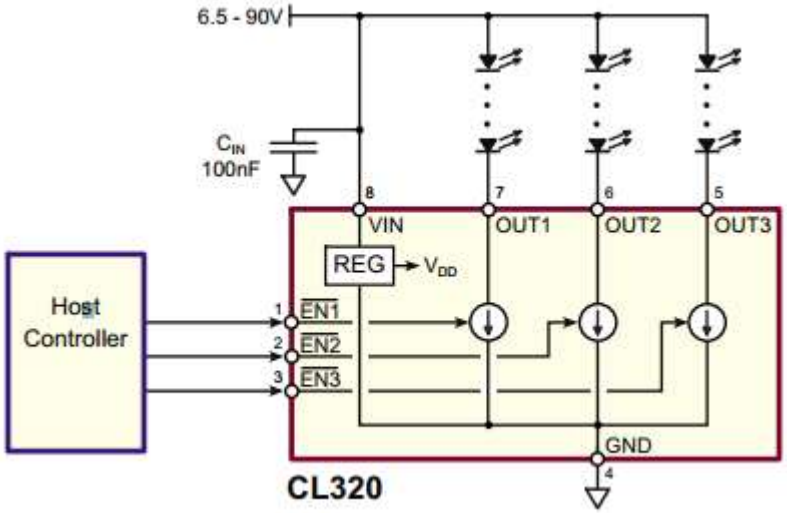

<< BACK

CL325

Online Datasheet

Features:

- ±6% current accuracy @ 4.0 -15V
- 90V standoff voltage
- Separate enable pins for each channel allow for PWM dimming
- Over-temperature protection
- Operating Temperature Range: -40ºC to +125ºC
- Package Options: SOIC-8 w/Heat Slug

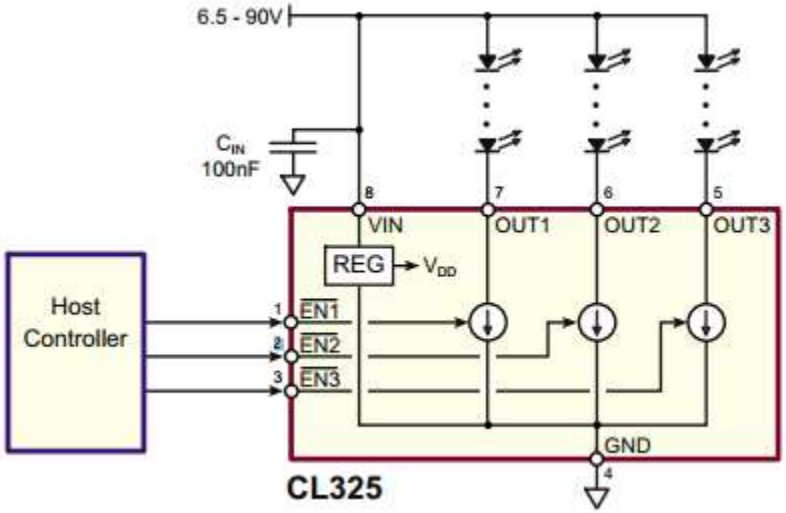

<< BACK

CL330

Online Datasheet

Features:

- ±6.0% current accuracy @ 4.0 -15V
- 90V standoff voltage
- Separate enable pins for each channel allow for PWM dimming
- Over-temperature protection
- Operating Temperature Range: -40ºC to +125ºC
- Package Options: SOIC-8 w/Heat Slug

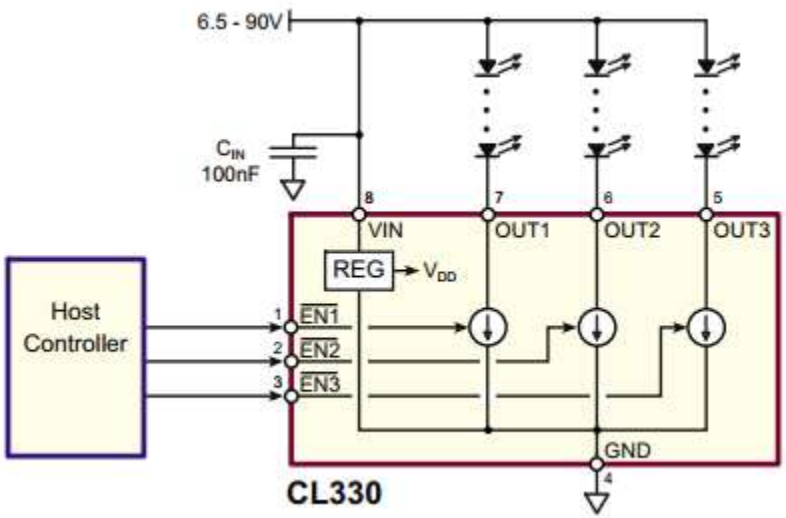

<< BACK

CL520

Online Datasheet

Features:

- 20mA ±10% constant current drive
- 1.0V dropout
- 90V rating for transient immunity
- Temperature compensated
- 4.75 - 90V supply range
- Operating Temperature Range: -40ºC to +125ºC
- Package Options: TO-252 (DPAK), TO-92

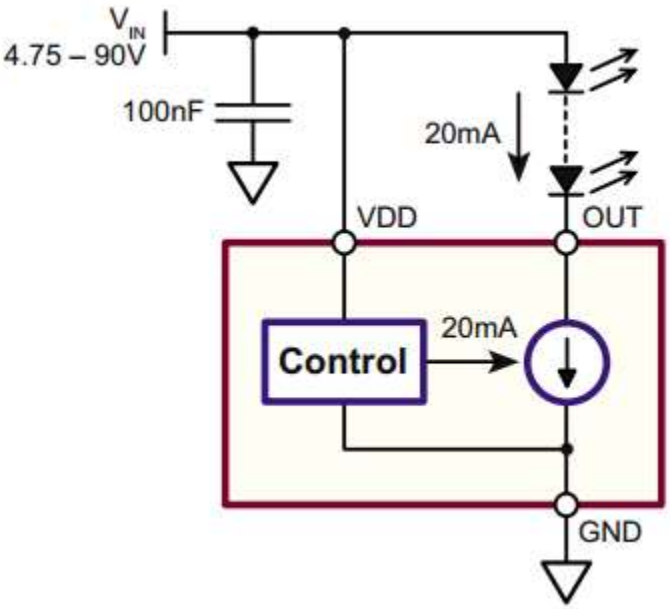

<< BACK

CL525

Online Datasheet

Features:

- 25mA ±10% constant current drive
- 1.0V dropout
- 90V rating for transient immunity
- Temperature compensated
- 4.75 - 90V supply range
- Operating Temperature Range: -40ºC to +125ºC
- Package Options: TO-252 (DPAK), TO-92

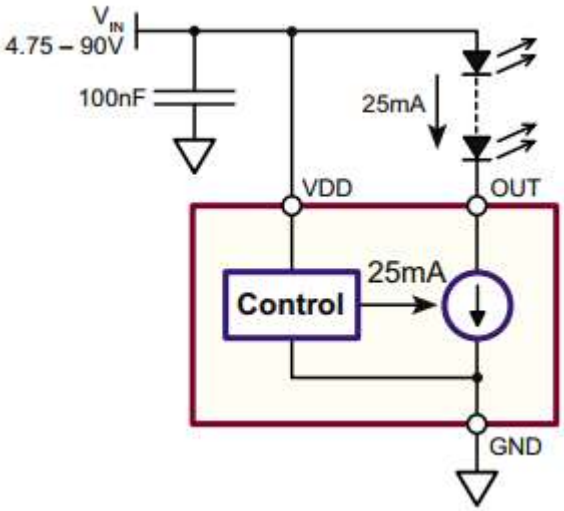

<< BACK

CL6

Online Datasheet

Features:

- 100mA ±5% constant current drive
- Built-in reverse polarity protection
- Dimmable via PWM supply
- Over temperature protection
- Tab ground allows direct heat sinking to chassis
- 90V max rating for transient immunity
- Operating Temperature Range:
  -40ºC to +125ºC
- Package Options: TO-252 (DPAK), TO-220

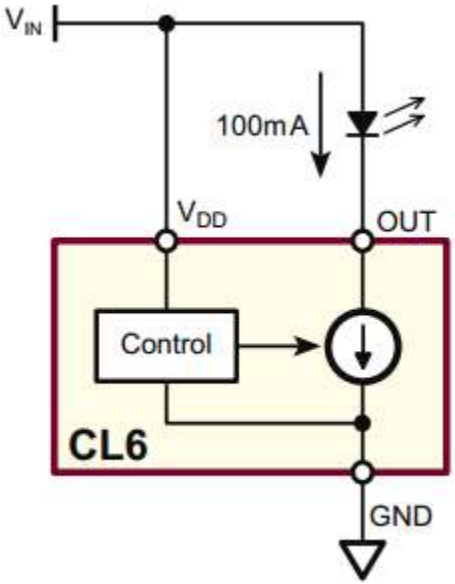

<< BACK

CL7

Online Datasheet

Features:

- 100mA ±5% constant current drive
- Built-in reverse polarity protection
- Logic level enable
- Dimmable via EN pin
- Over temperature protection
- 90V max rating for transient immunity
- Operating Temperature Range: -40ºC to +125ºC
- Package Options: SOIC-8 w/Heat Slug

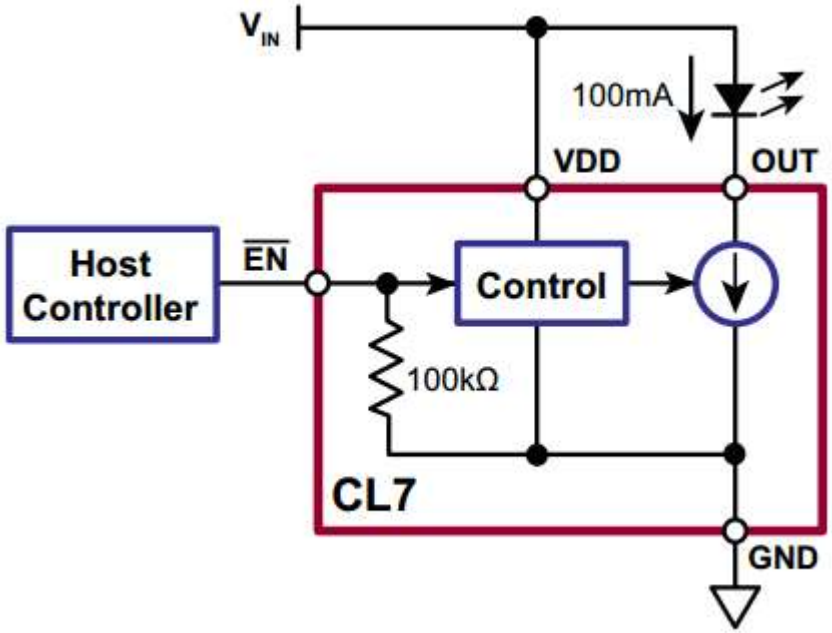

<< BACK

CL8800

Online Datasheet

Features:

- Minimal component count (base config: CL8800 + 6 resistors + diode bridge)
- No magnetics, no capacitors
- Up to 7.5W output (13W w/ heat sink)
- >110Lm/W using efficient LEDs
- 85% typical electrical efficiency
- >0.95 power factor
- <20% THD line current
- Low conducted EMI w/o filters
- 85% LED luminous utilization
- Phase dimmer compatible with an RC network
- Operating Temperature Range: -40ºC to +125ºC
- Package Options: VQFN-33 (6x6)

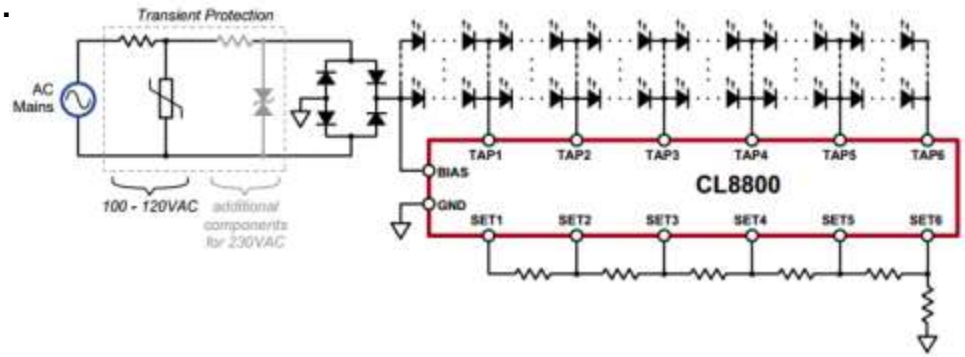

<< BACK

CL8801

Online Datasheet

Features:

- Minimal component count (base config: CL8801 + 4 resistors + diode bridge)
- No magnetics, no capacitors
- Up to 7.5W output (13W w/ heat sink)
- >110Lm/W using efficient LEDs
- 85% typical electrical efficiency
- >0.95 power factor
- <30% THD line current
- Low conducted EMI w/o filters
- 85% LED luminous utilization
- Phase dimmer compatible with an RC network
- Operating Temperature Range: -40ºC to +125ºC
- Package Options: VQFN-33 (6x6)

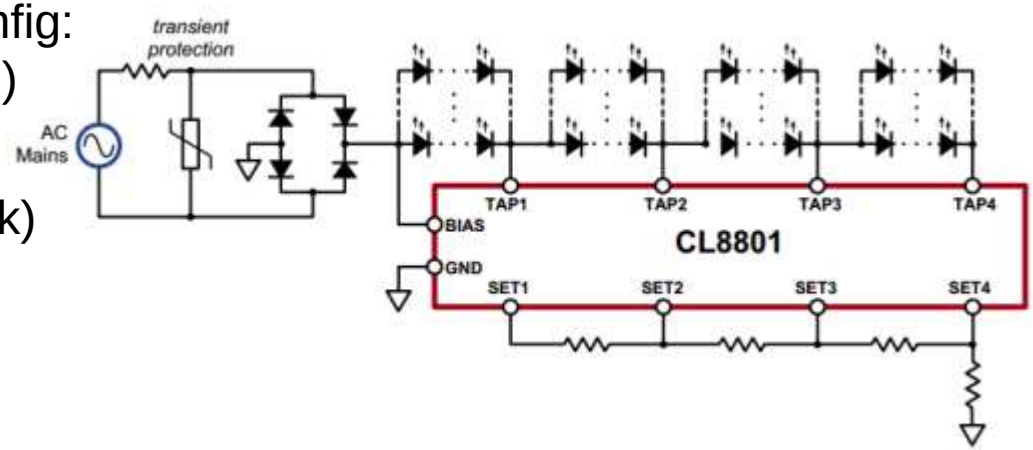

<< BACK

CL88020

Triac Dimmable, Off-line AC Direct Drive for 120V_{AC}, Sequential Linear, 4-Tap

Online Datasheet

Features:

- Optimized for 120 VAC Nominal Input Voltage:
  - 120 VAC ± 15% input voltage
- Targeted for 8.5W Output Power
- Programmable Over-temperature Protection:
  - Gradual Reduction in Light Output
- Active Line Regulation:
  - Typical Line Regulation of –12% to +0%
- Four Taps with Two Current Set Resistors:
  - Allows Optimization of THD
- Percent Flicker = 90.3%, Flicker Index = 0.288
- Optional Reduced Light Output Ripple:
  - Provides Continuous Power to the LED
  - Eliminates Strobing
  - Uses an External Ceramic Storage Capacitor
- TRIAC Dimmer Compatible
- Thermally Enhanced 8-Lead SOIC Package:
  - Larger Creepage Distances between High –
    - Voltage and Low Voltage Pins

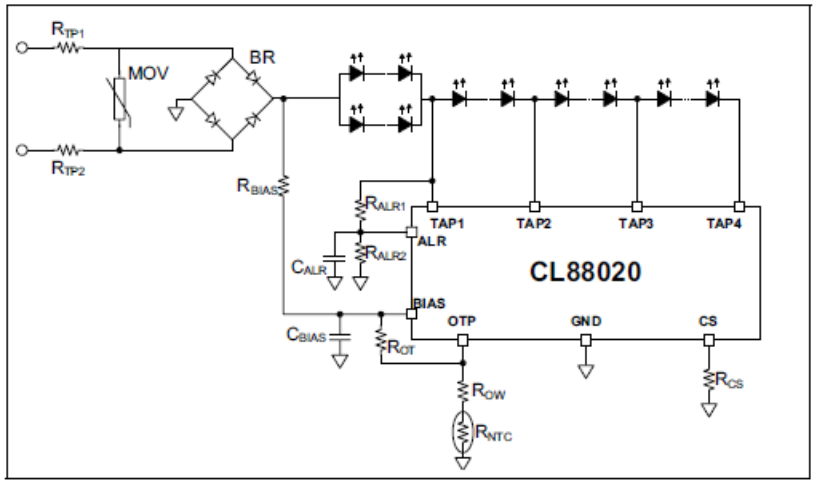

<< BACK

DN1509

Online Datasheet

Features:

- 90V $BV_{DSX(min)}$
- 6.0Ω $R_{DSON(max)}$
- High Input Impedance
- Low Input Capacitance
- Fast Switching Speeds
- Low On-Resistance
- Free from Secondary Breakdown
- Low Input and Output Leakages
- Operating Temperature Range: -55ºC to +150ºC
- RoHS Compliant Package: 3L SOT-89, 5L SOT-23

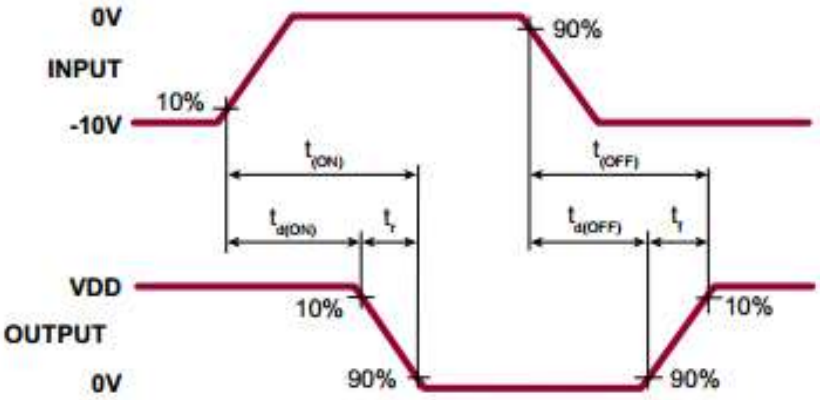

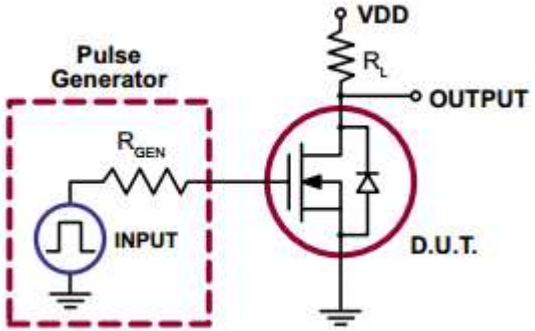

<< BACK

DN2450

Online Datasheet

Features:

- 500V $BV_{DSX(min)}$
- 10Ω $R_{DSON(max)}$
- High Input Impedance
- Low Input Capacitance
- Fast Switching Speeds
- Low On-Resistance
- Free from Secondary Breakdown
- Low Input and Output Leakages
- Operating Temperature Range: -55ºC to +150ºC
- RoHS Compliant Package: TO-252 (DPAK), SOT-89

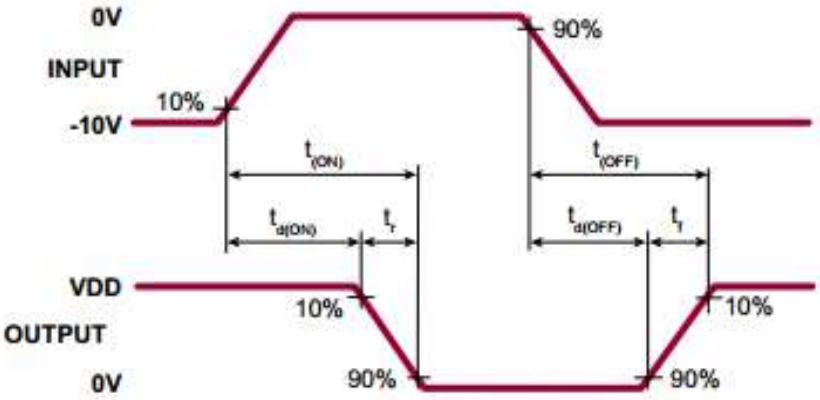

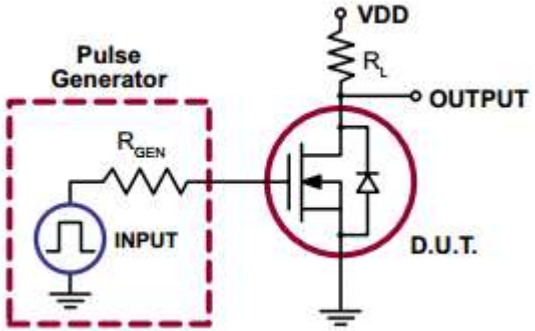

<< BACK

DN2470

Online Datasheet

Features:

- 700V $BV_{DSX(min)}$
- 42Ω $R_{DSON\ (max)}$
- High Input Impedance
- Low Input Capacitance
- Fast Switching Speeds
- Low On-Resistance
- Free from Secondary Breakdown
- Low Input and Output Leakages
- Operating Temperature Range: -55ºC to +150ºC
- RoHS Compliant Package: TO-252 (DPAK)

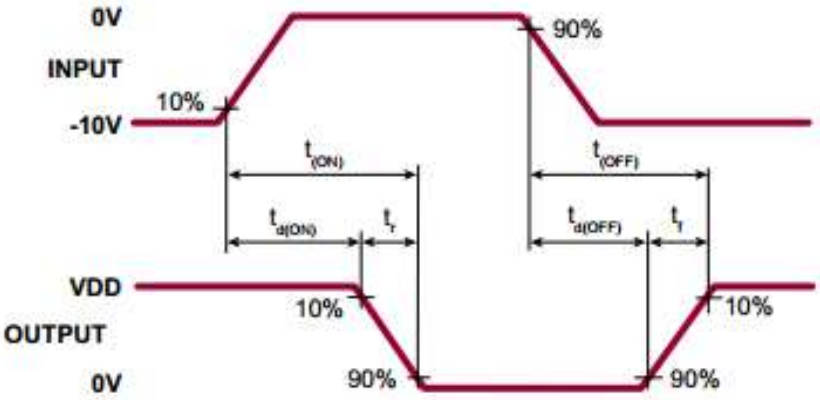

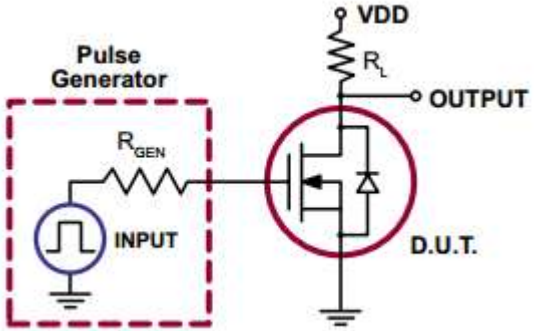

<< BACK

DN2530

Online Datasheet

Features:

- 300V $BV_{DSX(min)}$
- 12Ω $R_{DSON\ (max)}$
- High Input Impedance
- Low Input Capacitance
- Fast Switching Speeds
- Low On-Resistance
- Free from Secondary Breakdown
- Low Input and Output Leakages
- Operating Temperature Range: -55ºC to +150ºC
- RoHS Compliant Package: TO-92, SOT-89

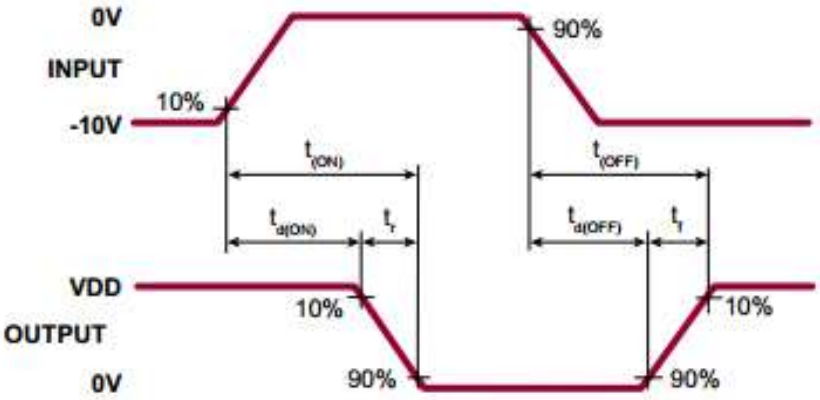

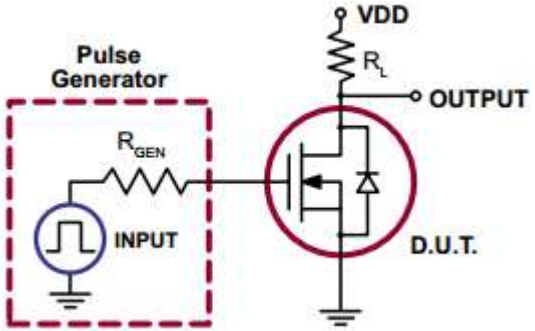

<< BACK

DN2535

Online Datasheet

Features:

- 350V $BV_{DSX(min)}$
- 25Ω $R_{DSON\ (max)}$
- High Input Impedance
- Low Input Capacitance
- Fast Switching Speeds
- Low On-Resistance
- Free from Secondary Breakdown
- Low Input and Output Leakages
- Operating Temperature Range: -55ºC to +150ºC
- RoHS Compliant Package: TO-92, TO-220

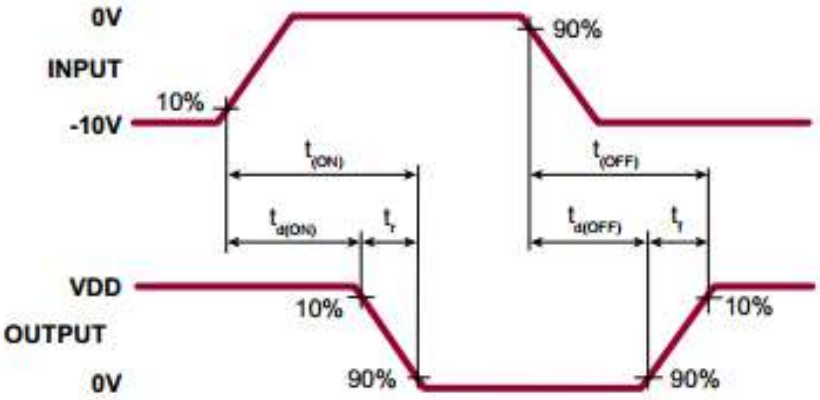

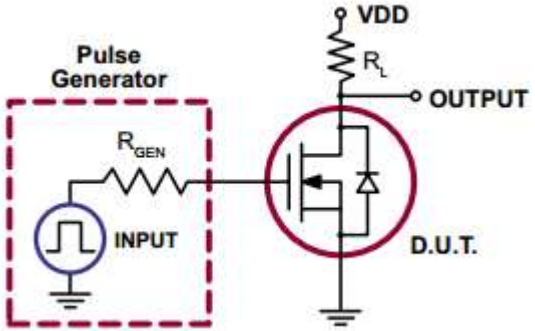

<< BACK

DN2540

Online Datasheet

Features:

- 400V $BV_{DSX(min)}$
- 25Ω $R_{DSON\ (max)}$
- High Input Impedance
- Low Input Capacitance
- Fast Switching Speeds
- Low On-Resistance
- Free from Secondary Breakdown
- Low Input and Output Leakages
- Operating Temperature Range: -55ºC to +150ºC
- RoHS Compliant Package: TO-92, TO-220, SOT-89

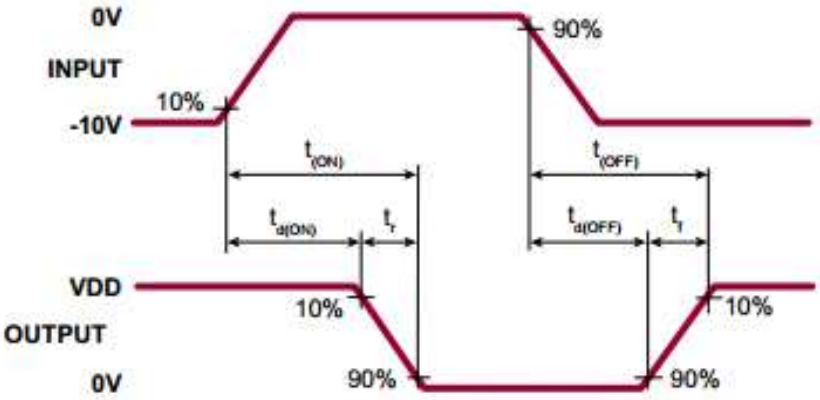

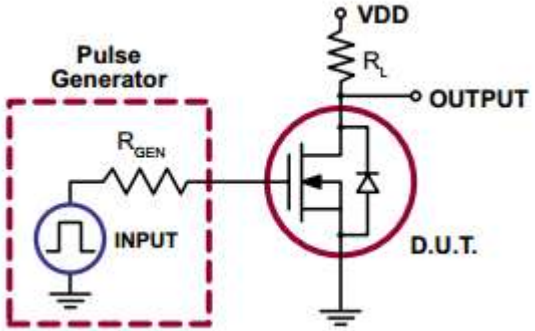

<< BACK

DN2625

Online Datasheet

Features:

- 250V $BV_{DSX(min)}$
- 3.5Ω $R_{DSON\ (max)}$
- High Input Impedance
- Low Input Capacitance
- Fast Switching Speeds
- Low On-Resistance
- Free from Secondary Breakdown
- Low Input and Output Leakages
- Operating Temperature Range: -55ºC to +150ºC
- RoHS Compliant Package: TO-252 (DPAK)

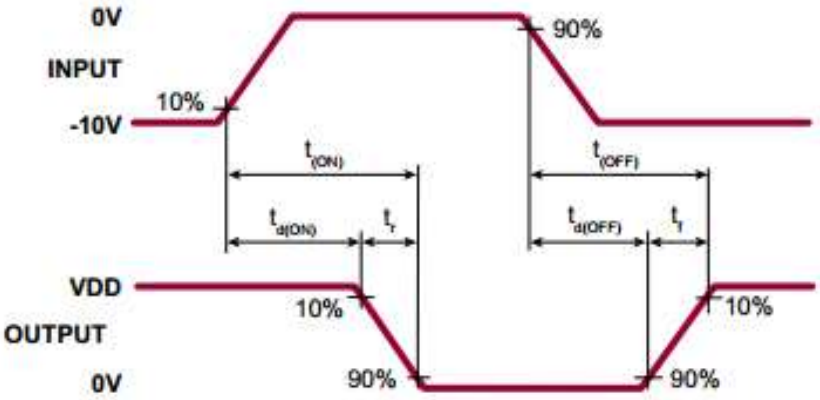

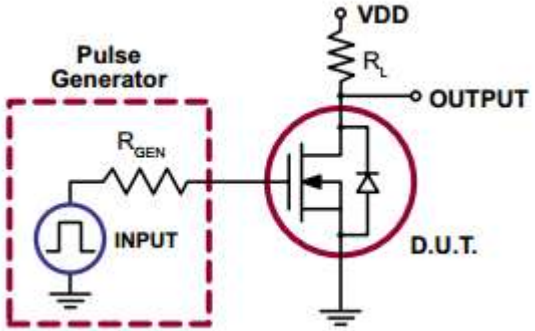

<< BACK

DN3135

Online Datasheet

Features:

- 350V $BV_{DSX(min)}$
- 35Ω $R_{DSON\ (max)}$
- High Input Impedance
- Low Input Capacitance
- Fast Switching Speeds
- Low On-Resistance
- Free from Secondary Breakdown
- Low Input and Output Leakages
- Operating Temperature Range: -55ºC to +150ºC
- RoHS Compliant Package: SOT-23, SOT-89

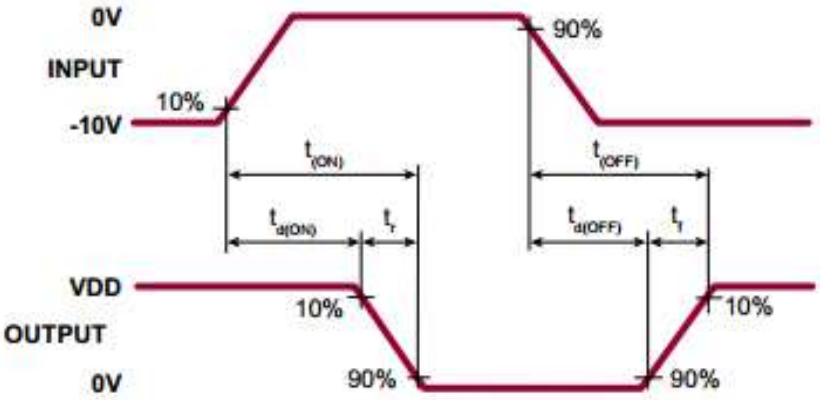

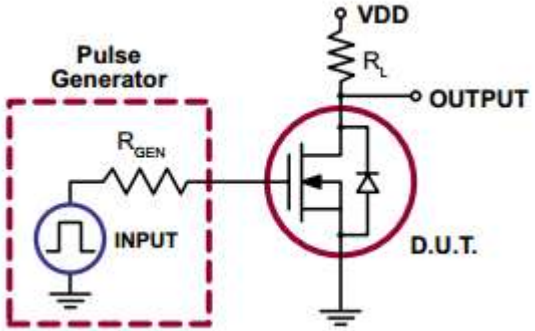

<< BACK

DN3145

Online Datasheet

Features:

- 450V $BV_{DSX(min)}$
- 60Ω $R_{DSON\ (max)}$
- High Input Impedance
- Low Input Capacitance
- Fast Switching Speeds
- Low On-Resistance
- Free from Secondary Breakdown
- Low Input and Output Leakages
- Operating Temperature Range: -55ºC to +150ºC
- RoHS Compliant Package: SOT-89

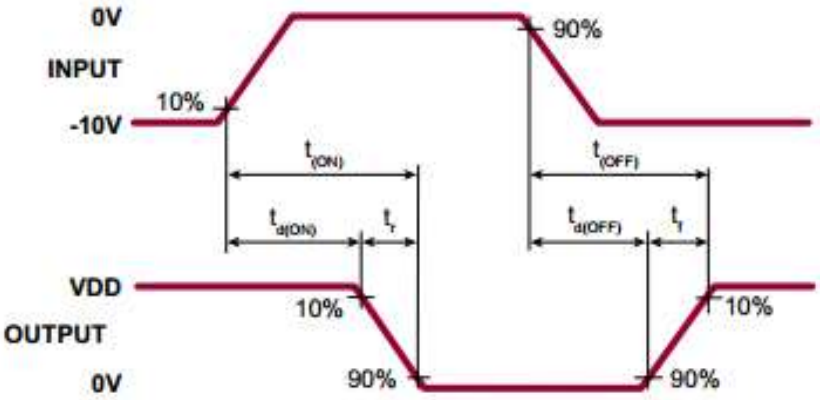

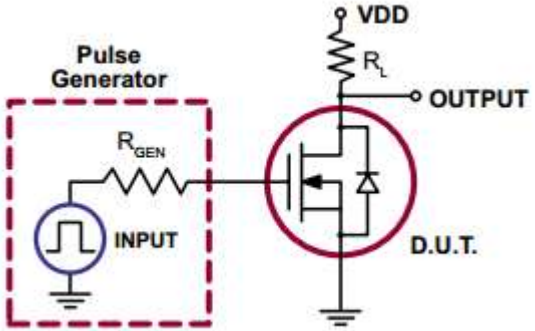

<< BACK

DN3525

Online Datasheet

Features:

- 250V $BV_{DSX(min)}$
- 6.0Ω $R_{DSON\ (max)}$
- High Input Impedance
- Low Input Capacitance
- Fast Switching Speeds
- Low On-Resistance
- Free from Secondary Breakdown
- Low Input and Output Leakages
- Operating Temperature Range: -55ºC to +150ºC
- RoHS Compliant Package: SOT-89

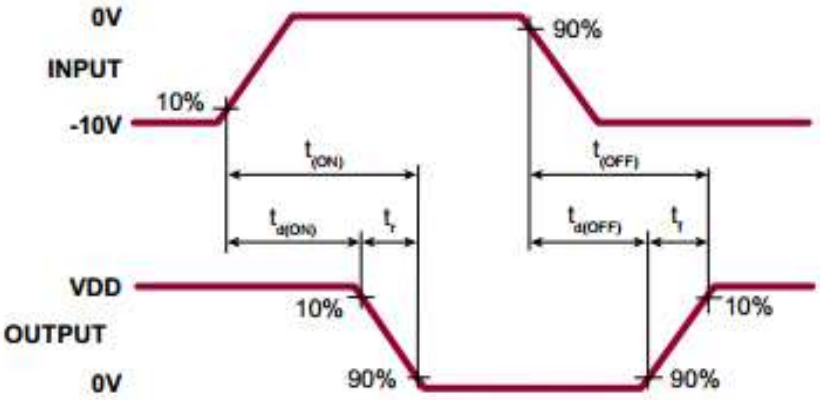

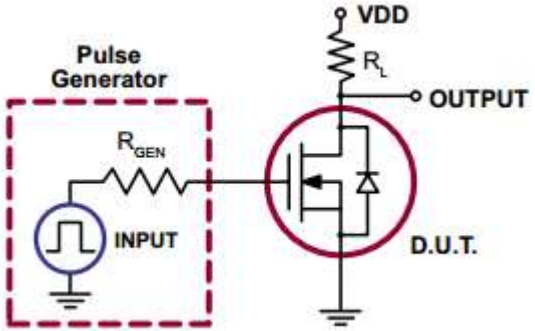

<< BACK

DN3535

Online Datasheet

Features:

- 350V $BV_{DSX(min)}$
- 10Ω $R_{DSON\ (max)}$
- High Input Impedance
- Low Input Capacitance
- Fast Switching Speeds
- Low On-Resistance
- Free from Secondary Breakdown
- Low Input and Output Leakages
- Operating Temperature Range: -55ºC to +150ºC
- RoHS Compliant Package: SOT-89

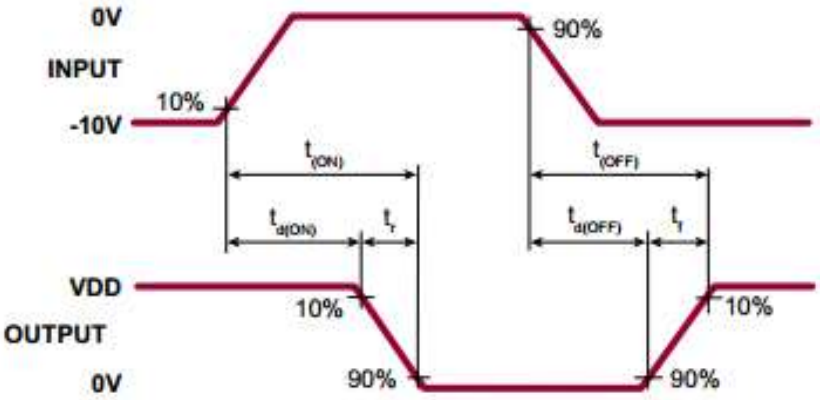

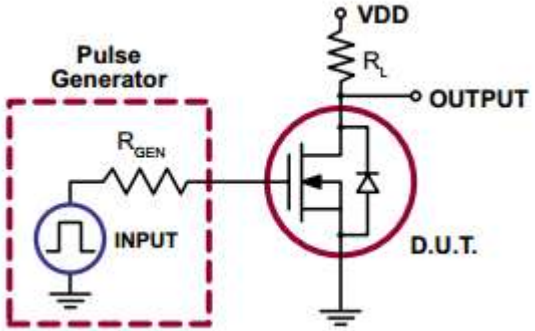

<< BACK

DN3545

Online Datasheet

Features:

- 450V $BV_{DSX(min)}$
- 20Ω $R_{DSON\ (max)}$
- High Input Impedance
- Low Input Capacitance
- Fast Switching Speeds
- Low On-Resistance
- Free from Secondary Breakdown
- Low Input and Output Leakages
- Operating Temperature Range: -55ºC to +150ºC
- RoHS Compliant Package: TO-92, SOT-89

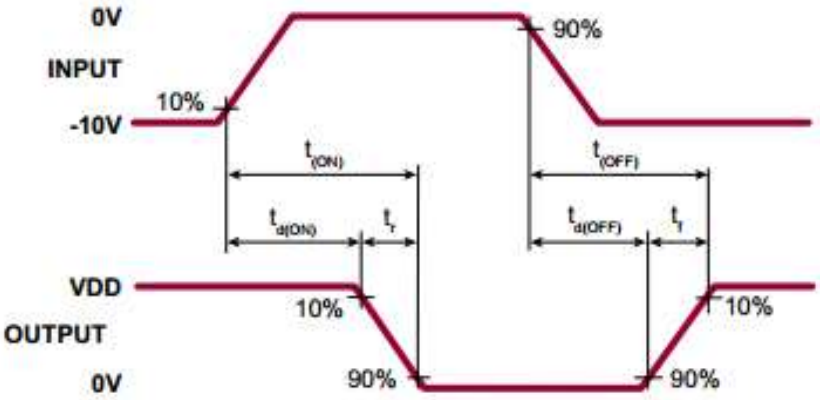

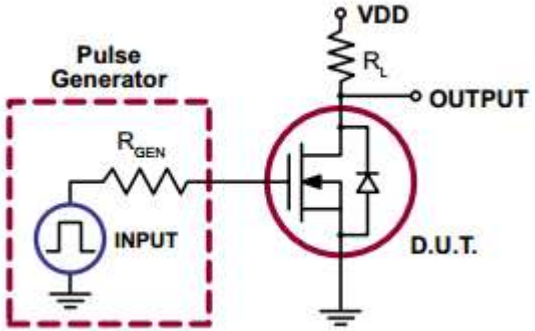

<< BACK

DN3765

Online Datasheet

Features:

- 650V $BV_{DSX(min)}$
- 8.0Ω $R_{DSON\ (max)}$
- High Input Impedance
- Low Input Capacitance
- Fast Switching Speeds
- Low On-Resistance
- Free from Secondary Breakdown
- Low Input and Output Leakages
- Operating Temperature Range: -55ºC to +150ºC
- RoHS Compliant Package: TO-252 (DPAK)

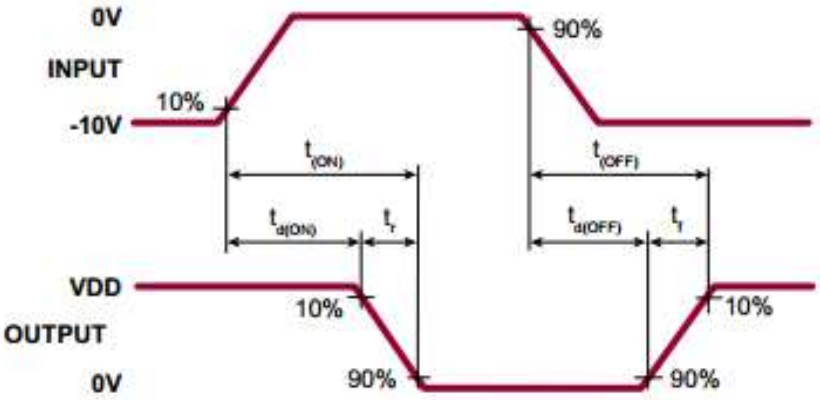

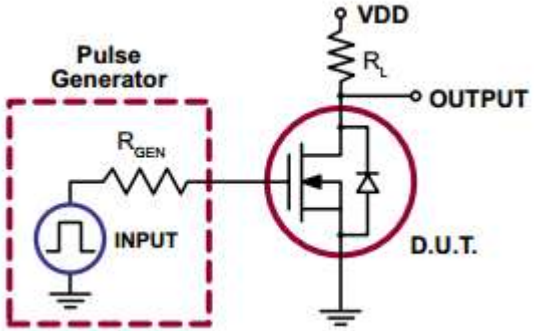

<< BACK

LND01

Online Datasheet

Features:

- 9.0V $BV_{DSX(min)}$
- 1.4Ω $R_{DSON\ (max)}$
- Bi-directional
- Low On-Resistance
- Low Input Capacitance
- Fast Switching Speeds
- High Input Impedance and High Gain
- Low Power Drive Requirement
- Ease of Paralleling
- Operating Temperature Range: -55ºC to +150ºC
- RoHS Compliant Package: 5L SOT-23

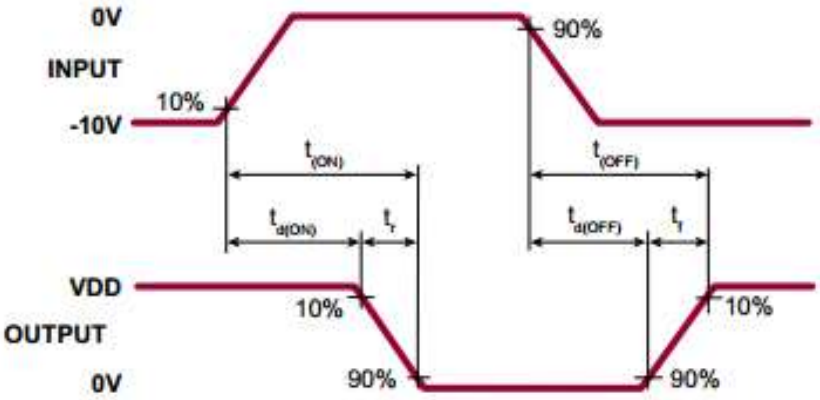

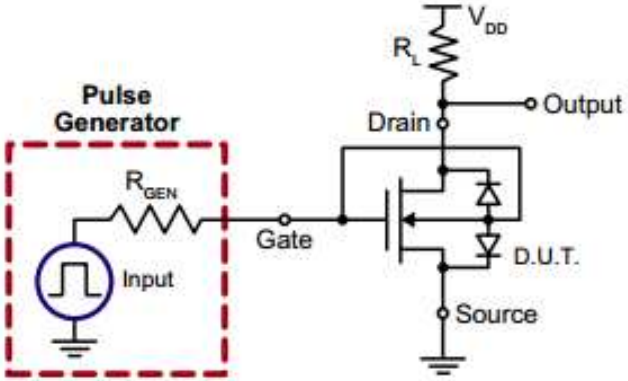

<< BACK

LND150

Online Datasheet

Features:

- 500V $BV_{DSX(min)}$
- 1000Ω $R_{DSON\ (max)}$
- Bi-directional
- Low On-Resistance
- Low Input Capacitance
- Fast Switching Speeds
- High Input Impedance and High Gain
- Low Power Drive Requirement
- Ease of Paralleling
- Operating Temperature Range: -55ºC to +150ºC
- RoHS Compliant Package: SOT-23, TO-92, SOT-89

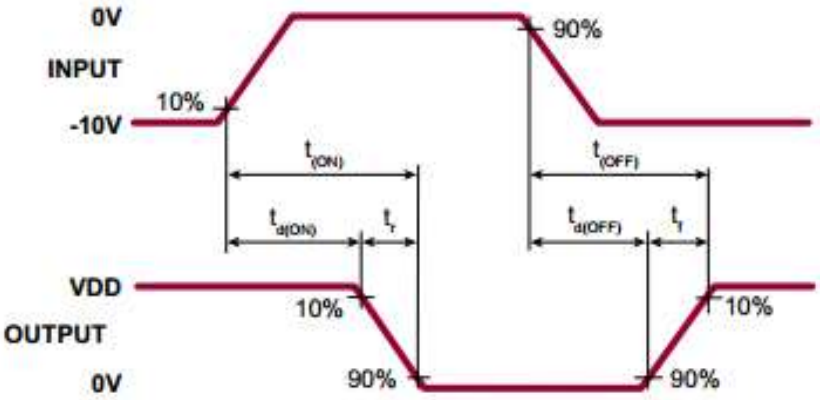

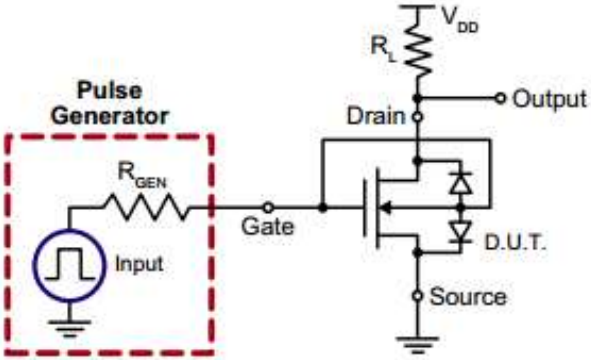

<< BACK

LR645

Online Datasheet

Features:

- Accepts Inputs from 15V to 450V
- Output currents up to 3.0mA continuous, 30mA peak
- Supply Current Typically 50µA
- Line regulation typically 0.1mV/V
- Output can be trimmed from 8.0 to 12V
- Output current can be increased to 150mA with external FET
- Operating Temperature Range: -55ºC to +150ºC
- Package Options: SOIC-8, TO-92, TO-220, SOT-89

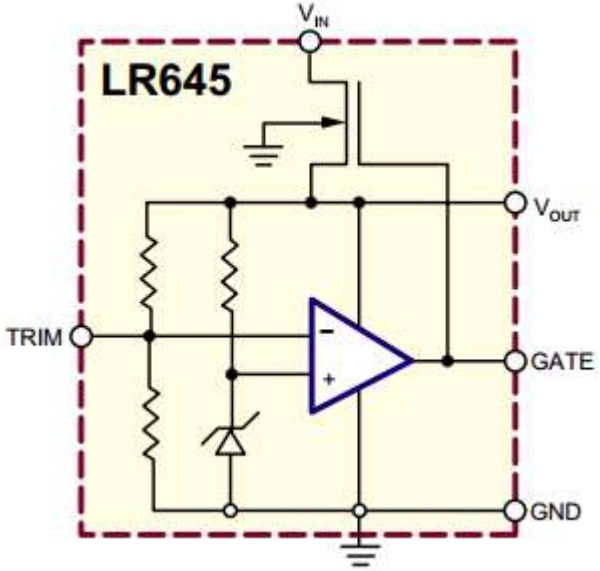

<< BACK

LR745

Online Datasheet

Features:

- Accepts Inputs from 35V to 450V
- Output Current Limiting
- For PWM ICs with Start-up Threshold Voltage of 13.9V – 18.0V
- Very Low Power Consumption After Start-up
- Operating Temperature Range: -55ºC to +150ºC
- Package Options: TO-92, SOT-89

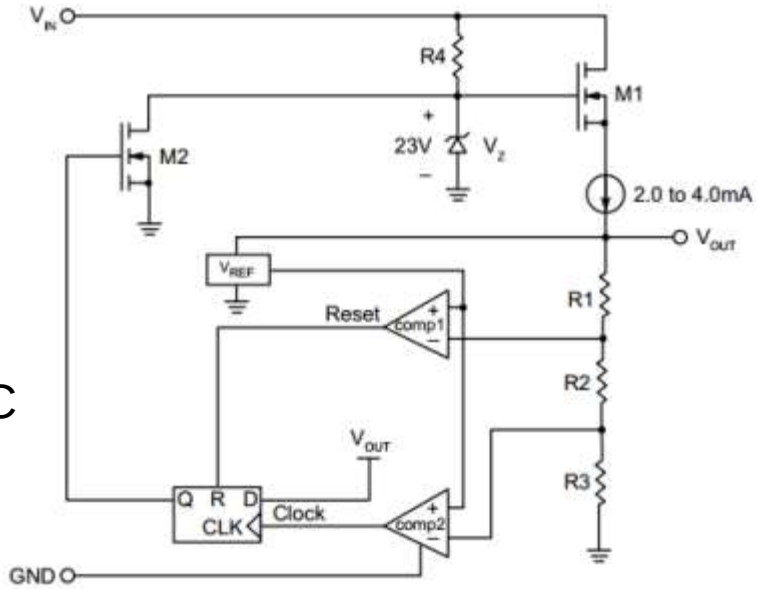

<< BACK

LR8

Online Datasheet

Features:

- 13.2V - 450V input voltage range
- Adjustable 1.2V - 440V output regulation
- 5% output voltage tolerance
- Output current limiting
- 10µA typical ADJ current
- Internal junction temperature limiting
- Operating Temperature Range: -55ºC to +150ºC
- Package Options: TO-252 (DPAK), TO-92, SOT-89

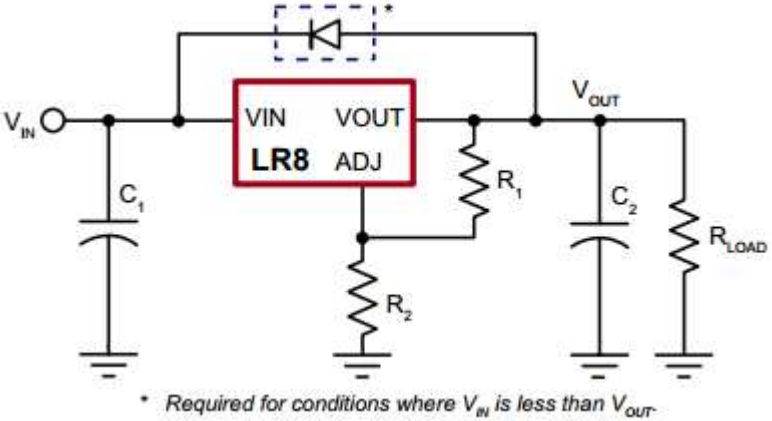

<< BACK

LR12

Online Datasheet

Features:

- 13.2V to 100V input voltage range
- Stable with 100nF output capacitor
- Adjustable 1.2V to 88V output regulation
- 5% reference voltage tolerance
- Output current limiting, 50mA min.
- 10µA typical ADJ current
- Over temperature protection
- Operating Temperature Range: -55ºC to +150ºC
- Package Options: TO-252 (DPAK), TO-92, SOIC-8

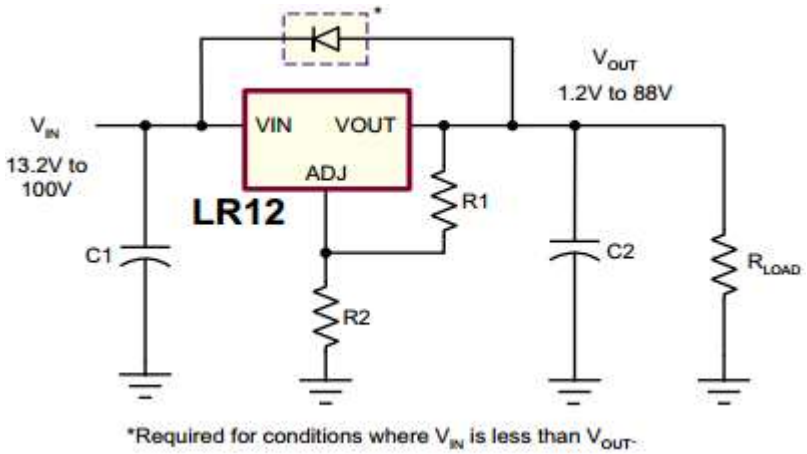

<< BACK

SR086

Online Datasheet

Features:

- Efficient operation without magnetics
- No high voltage capacitors
- Adjustable main output voltage (9.0 to 50V)
- Additional 3.3V internal regulator
- Up to 100mA combined output current
- Single BOM for 120VAC/230VAC
- Built-in soft start
- Less than 200mW standby power
- Operating Temperature Range: -40ºC to +125ºC
- Package Options: SOIC-8 w/Heat Slug

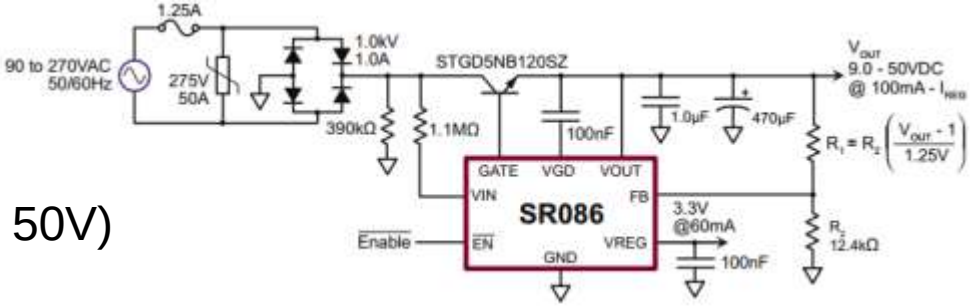

<< BACK

SR087

Online Datasheet

Features:

- Efficient operation without magnetics
- No high voltage capacitors
- Adjustable main output voltage (9.0 to 50V)
- Additional 5.0V internal regulator
- Up to 100mA combined output current
- Single BOM for 120VAC/230VAC
- Built-in soft start
- Less than 200mW standby power
- Operating Temperature Range: -40ºC to +125ºC
- Package Options: SOIC-8 w/Heat Slug

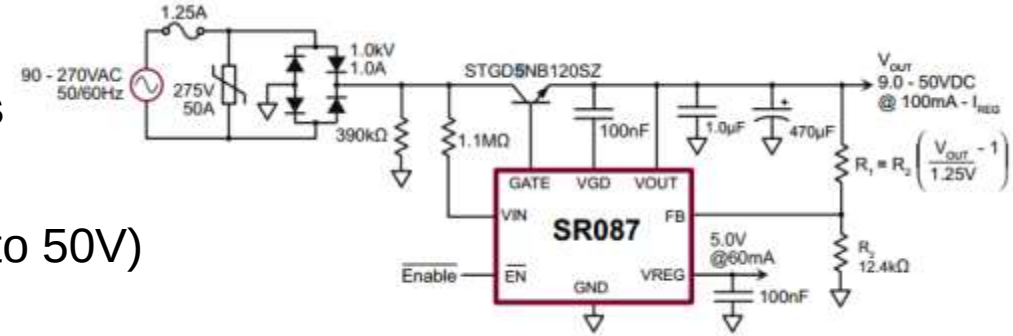

<< BACK

SR10

Online Datasheet

Features:

- Efficiencies up to 75% at 20mA
- Less than 20mW standby power
- Optional 6.0V, 12V or 24V fixed output voltage, or adjustable from 6.0V to 28V
- Output current scalable up to 50mA
- 120VAC to 240VAC input
- No magnetics
- Inherent short circuit protection
- Operating Temperature Range: -40ºC to +125ºC
- Package Options: SOIC-8

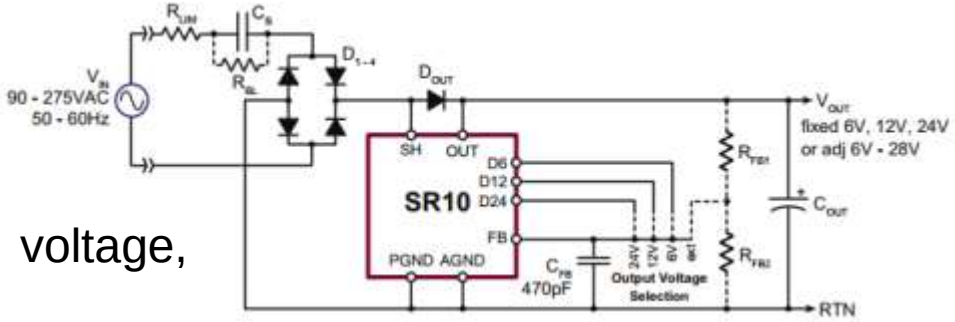

<< BACK

EMC1001

Online Datasheet

Features:

- Self Contained Internal Temperature Sensor
  - 0.25°C resolution
  - ±1.5°C Accuracy (40°C to 85°C)
- Maskable Interrupt
- One-shot Command during standby
- Programmable Temperature Conversion Rate
- SMBus 2.0 Interface
  - Address selected by external resistor
- 3.0V – 3.6V Operation
- 6-pin SOT-23

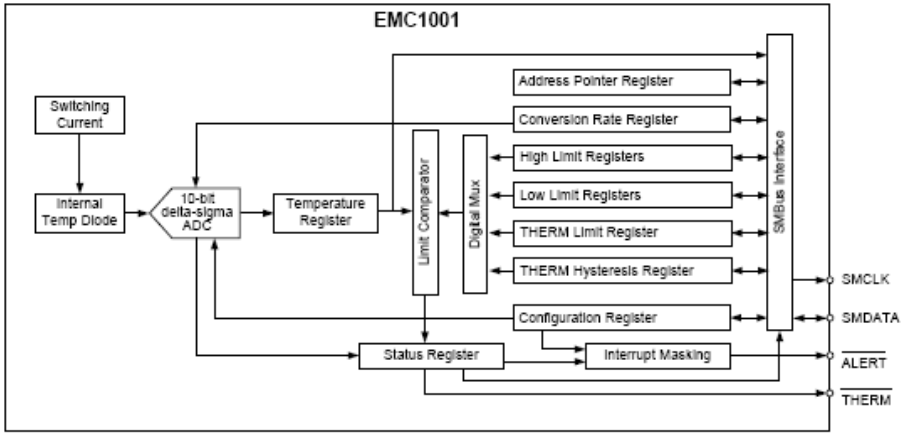

<< BACK

EMC1033

Online Datasheet

Features:

- Resistance Error Correction
- Ideality Factor Configuration
- Remote Thermal Zones
    - ±1.0°C Accuracy (40°C to 80°C)
    - 0.125°C resolution
- Internal Thermal Zone
    - ±3.0°C Accuracy (0°C to 85°C)
- Maskable Interrupt
- One-shot Command during standby
- Programmable Temperature Conversion Rate
- Extended temperature (-64°C to 191°C) available
- Over-limit Filtering with Consecutive Counter
- SMBus Interface
- 8-pin TSSOP

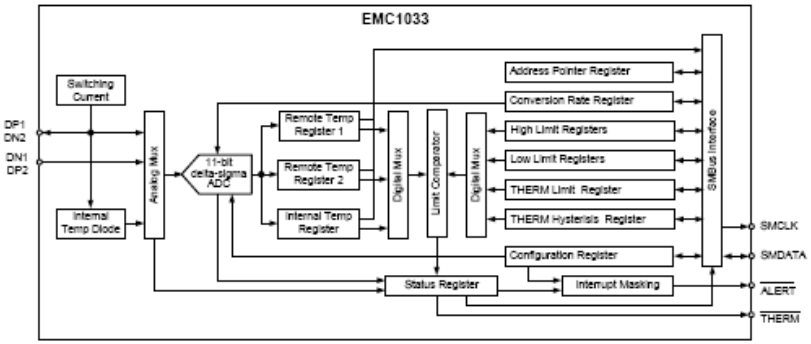

<< BACK

EMC1043/53/63

Online Datasheet

Features:

- 3 Channel temperature sensor
- Supports two external temperature diodes
  - ±1.0°C Accuracy (40°C to 80°C)
  - 0.125°C Resolution
  - Ideality Factor Configuration
  - Accepts 2200pF Cap Across Ext Diodes
  - Optional Resistive Error Correction on External Diode
  - Resistance Error Correction
    - EMC1063, powers up disabled
  - Beta Compensation for substrate diodes
    - EMC1043, ch 2 powers up disabled
    - EMC1053, both channels power up disabled
    - EMC1063, does not have beta compensation
- Internal Temperature Diode
  - ±3°C Accuracy (0°C to 85°C)
  - 0.125°C Resolution
- Low Power Operation, 4uA in standby
- Programmable Conversion Rate
- Reports Hotter of Two Diodes with Dual-core CPU
- 3.0V – 3.6V Operation
- SMBus 2.0 Interface
- 8-pin MSOP

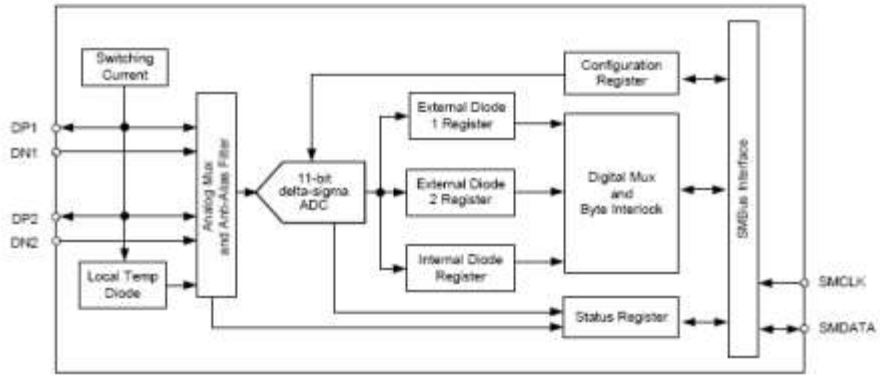

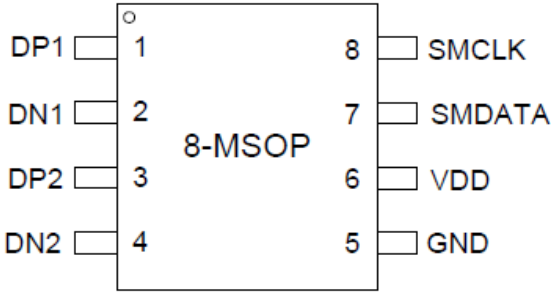

<< BACK

EMC1046/7

Online Datasheet

Features:

- 6 / 7 (EMC1046/EMC1047) channel temp sensor
- Supports diodes requiring the BJT or transistor model such as substrate and CPU diodes
- Resistance Error Correction
- Up to six External Temperature Monitors
  - ±1°C Accuracy (60°C < T_{DIODE} < 100°C)
  - 0.125°C Resolution
  - Supports up to 2.2nF filter capacitor
  - Anti-parallel diodes for extra diode support and compact design
- Internal Temperature Monitor
  - ±2°C accuracy
- 3.3V Operation
- 10-pin TSSOP

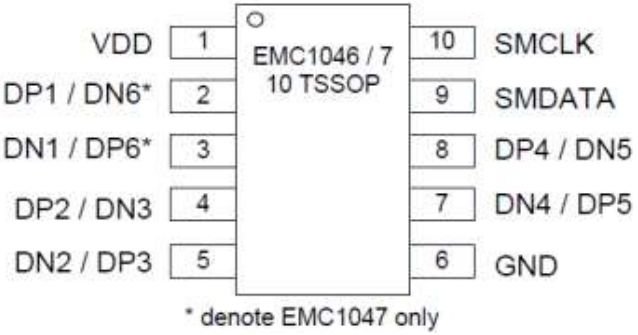

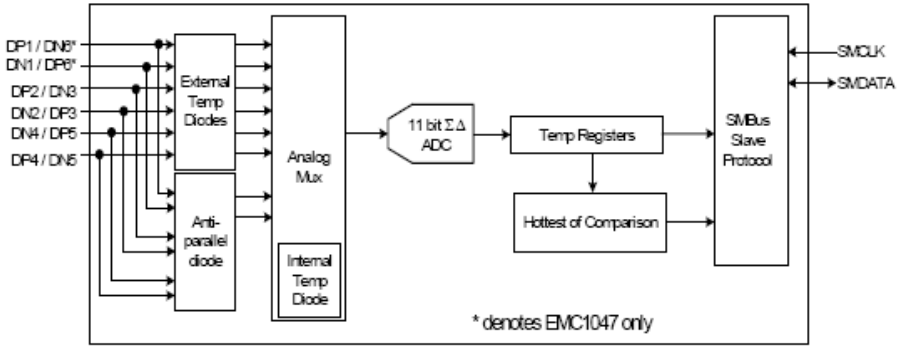

<< BACK

EMC1412/3/4

Online Datasheet

Features:

- 2 Channel temperature sensor (EMC1412)
- 3 Channel temperature sensor (EMC1413)
- 4 Channel temperature sensor (EMC1414)
- Remote temperature sensors (1,2,or 3 channels)
  - Automatically determines external diode type
  - Supports BJT/transistor model for substrate diode
  - Resistance Error Correction
- EMC1412 compatible w ADM1032, MAX6649, LM99
- External temperature monitor accuracy
  - ±1°C Accuracy (20°C < T_{DIODE} < 110°C)
  - 0.125°C resolution
  - Supports up to 2.2nF diode filter capacitor
- Internal temperature monitor accuracy
  - ±1°C accuracy
  - 0.125°C resolution
- Programmable temperature limits for ALERT# and THERM#
- Programmable or fixed SMBus/I2C Address
- 3.3V Operation
- 8-pin 2x3 TDFN, MSOP; 10-pin DFN, MSOP

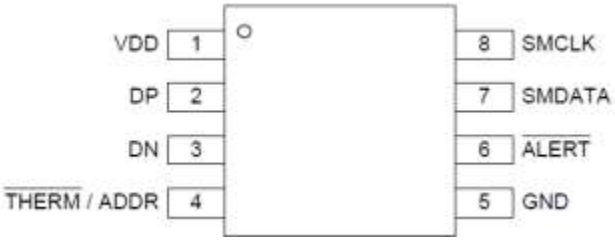

EMC1413

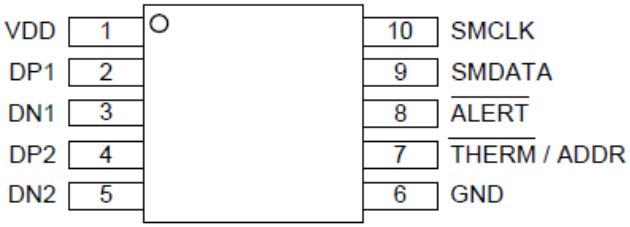

EMC1414

<< BACK

MCP9902/3/4

Online Datasheet

Features:

- 2, 3, 4 temperature sensor optimized for low temperature
- External temperature monitor accuracy
  - ±1°C maximum accuracy (-40°C < T_{DIODE} < 65°C)
  - ±2°C maximum accuracy (85°C < T_{DIODE} < +125°C)
  - 0.125°C resolution
  - Supports up to 2.2nF diode filter capacitor
- Remote temperature sensor
  - Automatically determines external diode type
  - Supports BJT/transistor model for substrate diode
  - Resistance Error Correction
- Internal temperature monitor accuracy
  - ±1°C accuracy
  - 0.125°C resolution
- Programmable temperature limits for ALERT# and THERM#
- Programmable or fixed SMBus/I2C Address
- 3.3V Operation
- 8-Lead 2x2 mm WDFN package
- Temperature Range: -40°C to +125°C

MCP9902
2 x 2 WDFN*

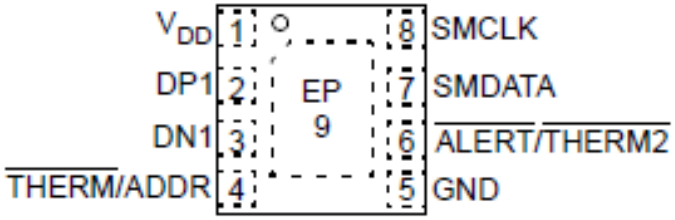

MCP9903
3 x 3 VDFN*

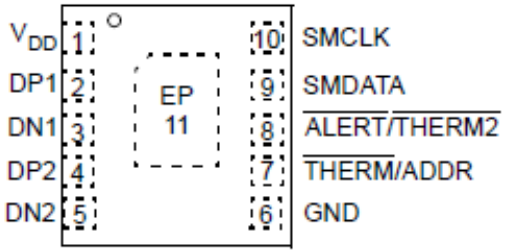

MCP9904
3 x 3 VDFN*

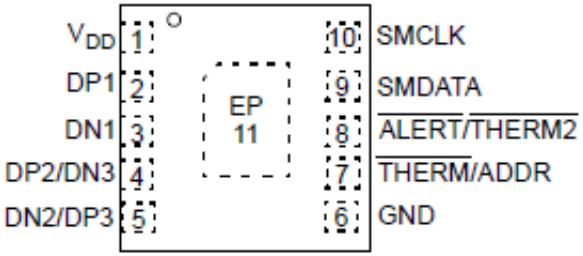

<< BACK

EMC1182/3/4

Online Datasheet

Features:

- 2 Channel temperature sensor (EMC1182)
- 3 Channel temperature sensor (EMC1183)
- 4 Channel temperature sensor (EMC1184)
- Remote temperature sensors (1,2,or 3 channels)
  - Automatically determines external diode type
  - Supports BJT/transistor model for substrate diode
  - Resistance Error Correction
- EMC1412 compatible w ADM1032, MAX6649, LM99
- External temperature monitor accuracy
  - ±1°C Accuracy (20°C < T_{DIODE} < 110°C)
  - 0.125°C resolution
  - Supports up to 2.2nF diode filter capacitor
- Internal temperature monitor accuracy
  - ±1°C accuracy
  - 0.125°C resolution
- Programmable temperature limits for ALERT# and THERM#
- Programmable or fixed SMBus/I2C Address
- 3.3V Operation
- 8-pin 2x3 TDFN, MSOP; 10-pin 3x3 DFN

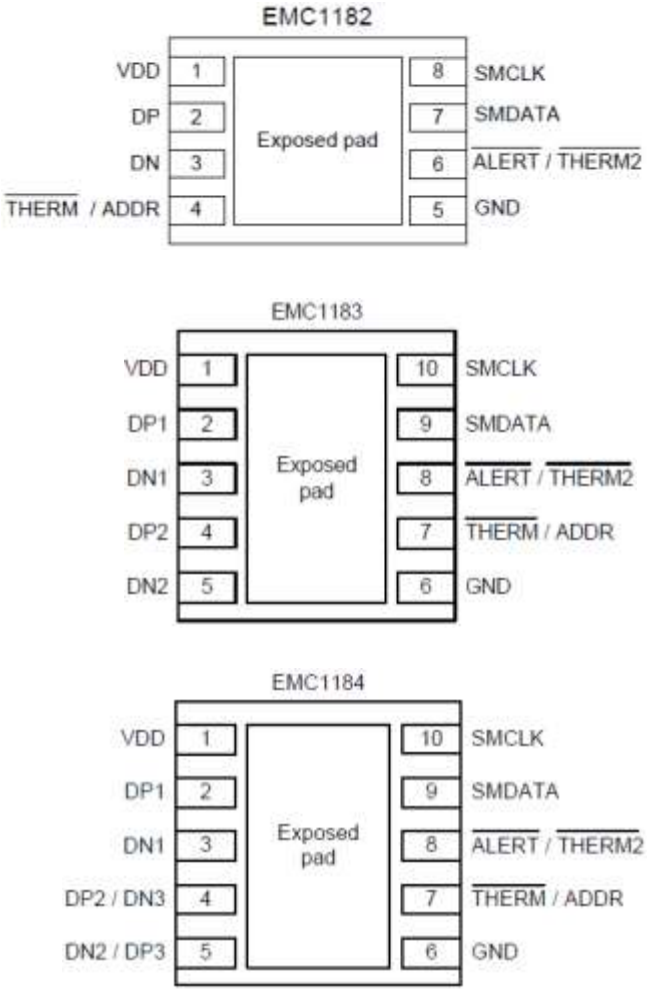

<< BACK

EMC1422/3/4

Online Datasheet

Features:

- 2 Channel temperature sensor (EMC1422)
- 3 Channel temperature sensor (EMC1423)
- 4 Channel temperature sensor (EMC1424)
- Remote temperature sensors (1,2,or 3 channels)
  - Automatically determines external diode type
  - Supports BJT/transistor model for substrate diode
  - Resistance Error Correction
- EMC1422 compatible with ADM1032, MAX6649, LM99
- Hardware Thermal Shutdown with dedicated SYS_SHDN
  - Configured range 77°C to 112°C in 1°C steps
  - Cannot be disabled or modified by software
- External temperature monitor accuracy
  - ±1°C Accuracy (60°C < T_{DIODE} < 100°C)
  - 0.125°C resolution
  - Anti-parallel diodes for extra diode support
- Internal temperature monitor accuracy
  - ±2°C accuracy
- Programmable temperature limits for ALERT#
- 3.3V Operation
- 8-pin MSOP, 10-pin MSOP

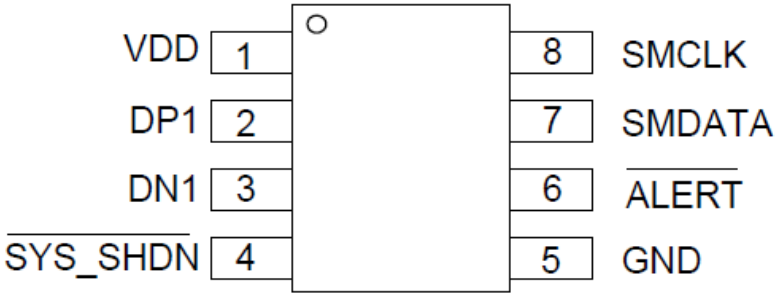

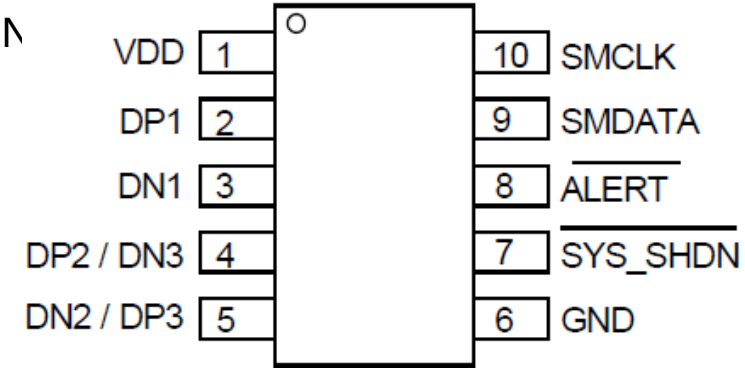

<< BACK

EMC1186/7/8

Online Datasheet

Features:

- 2 Channel temperature sensor (EMC1186)
- 3 Channel temperature sensor (EMC1187)
- 4 Channel temperature sensor (EMC1188)
- Remote temperature sensors (1,2,or 3 channels)
  - Automatically determines external diode type
  - Supports BJT/transistor model for substrate diode
  - Resistance Error Correction
- EMC1422 compatible with ADM1032, MAX6649, LM99
- Hardware Thermal Shutdown with dedicated SYS_SHDN
  - Configured range 77°C to 112°C in 1°C steps
  - Cannot be disabled or modified by software
- External temperature monitor accuracy
  - ±1°C Accuracy (60°C < T_{DIODE} < 100°C)
  - 0.125°C resolution
  - Anti-parallel diodes for extra diode support
- Internal temperature monitor accuracy
  - ±2°C accuracy
- Programmable temperature limits for ALERT#
- 3.3V Operation
- 8-pin 2x3 TDFN, 10-pin 3x3 DFN

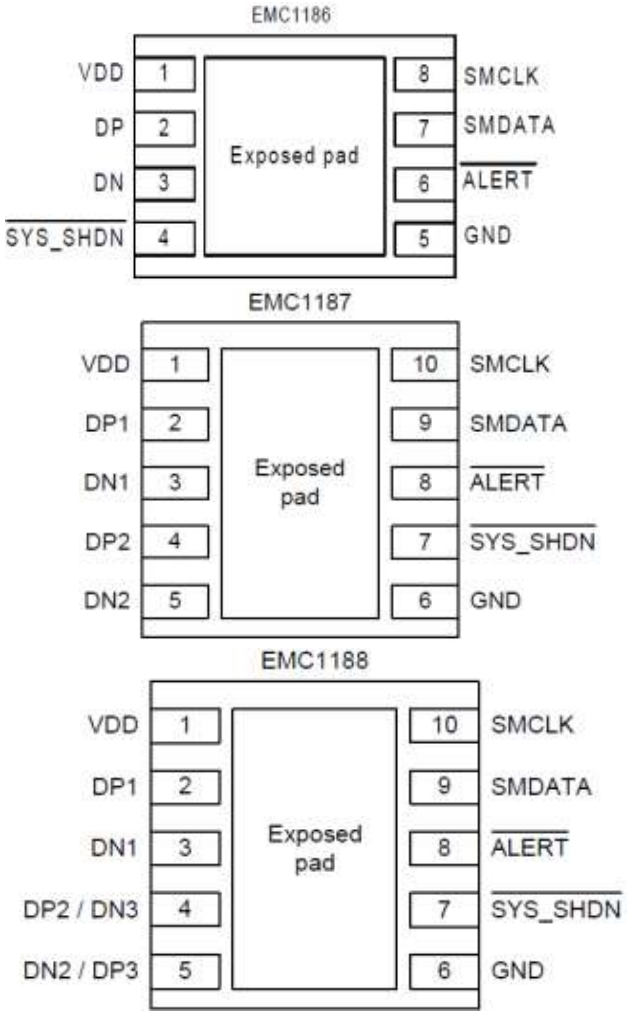

<< BACK

EMC1428

Online Datasheet

Features:

- 8 Channel temperature sensor
- Hardware Thermal Shutdown
  - Triggers dedicated SYS_SHDN pin
  - Configured range 77°C to 112°C in 1°C steps
  - Cannot be disabled or modified by software
- Support for diodes requiring BJT/transistor model
- Designed to support 45nm, 65nm and 90nm processors
- Resistance Error Correction
- Up to 7 External Temperature Monitors
  - ±1°C Accuracy (60°C < T_{DIODE} < 100°C)
  - 0.125°C resolution
  - Supports up to 2.2nF diode filter capacitor
  - Anti-parallel diodes for extra diode support
- Internal Temperature Monitor
  - ±2°C accuracy
- Programmable temperature limits for ALERT#
- 3.3V Operation
- 16-pin 4x4 QFN

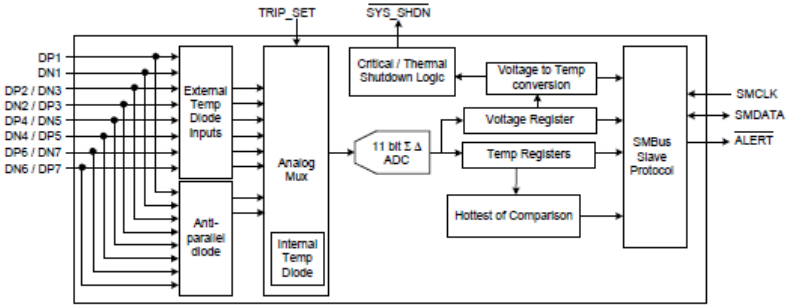

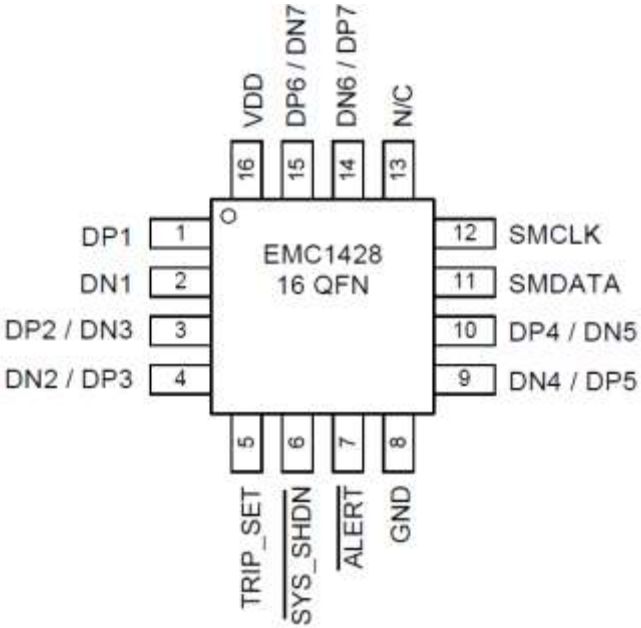

<< BACK

EMC2112

Online Datasheet

Features:

- 3.0 – 3.6V Supply Voltage
- Closed-Loop RPM-Based Fan Controller
  - 1% accuracy with external clock input
  - 3% accuracy with internal clock
  - Internal clock can be used as a source
  - Aging fan detection
- Integrated Linear Fan Driver
  - 600mA drive capability
- HW Thermal Shutdown (SYS_SHDN#)
- Reset Function (RESET#) On 5V Supply
- Up to Three Remote Thermal Zones
  - ±1°C accuracy (60°C to 100°C)
  - 0.125°C resolution
  - Designed to support 45nm, 65nm, and 90nm CPU Diodes
  - Eliminates temperature offset due to series resistance from PCB traces and thermal 'Diode'
- I2C/SMBus Interface
- 20-pin 4x4 QFN package

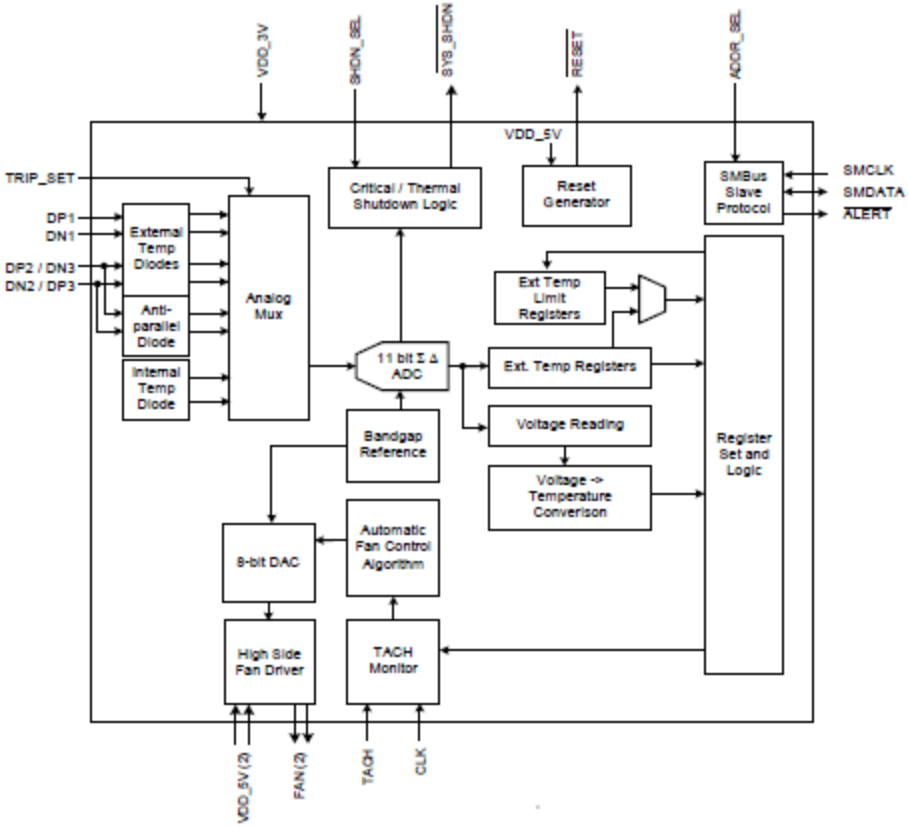

<< BACK

EMC2113

Online Datasheet

Features:

- Programmable Fan Control circuit
  - 4-wire fan compatible
  - Both low and high frequency PWM
- RPM-based fan control algorithm
  - 2% accurate from 500 – 16k RPM
- Temperature Look-Up Table
  - Eight steps that incorporate up to four temperature zones
- Up to Three External Temperature Channels
- Hardware Programmable Thermal Shutdown
- Internal Temperature Monitor
- 3.3V Supply Voltage
- Open-drain interrupt pin
- SMBus 2.0 Interface
- 16-pin 4x4 QFN package

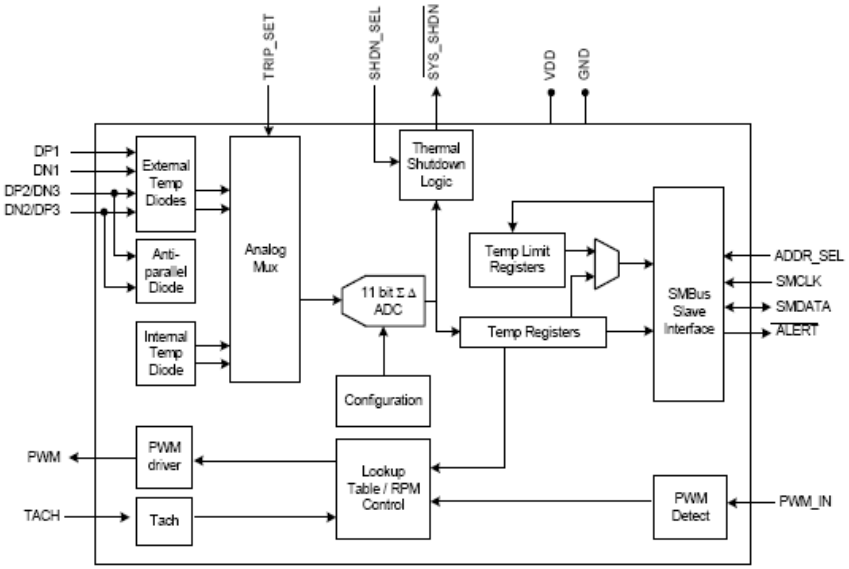

<< BACK

EMC2300

Online Datasheet

Features:

- 3.3 Volt Operation
- Fan Control
  - 3 PWM Outputs
  - 4 Fan Tachometer Inputs
  - High frequency fan support for 4 wire fans
  - One fan can be controlled up to 3 temp zones
- Power Saving Modes
- Temperature Monitor
  - Two remote thermal diodes ±3°C accuracy
  - Internal ambient temperature measurement
  - Limit comparison of all monitored values
- Voltage Monitor
- XNOR Tree Test Mode
- SMBus 2.0 Interface
- 16-pin SSOP

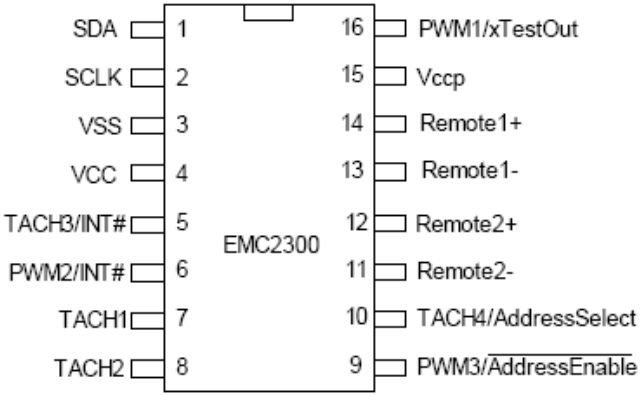

<< BACK

EMC2301

Online Datasheet

Features:

- Programmable Fan Control circuit
  - 4-wire fan compatible
  - High and low speed PWM
  - Optional detection of aging fans
  - Fan Spin Up Control and Ramp Rate Control
  - Alert on fan stall
- Watchdog Timer
- RPM-based fan control algorithm
  - 0.5% accuracy from 500 – 16k RPM (ext. xtal)
  - 1% accuracy from 500 – 16k RPM (int. clock)
- SMBUS 2.0 Interface
- CLK Pin can provide a clock source output
- 8-pin MSOP

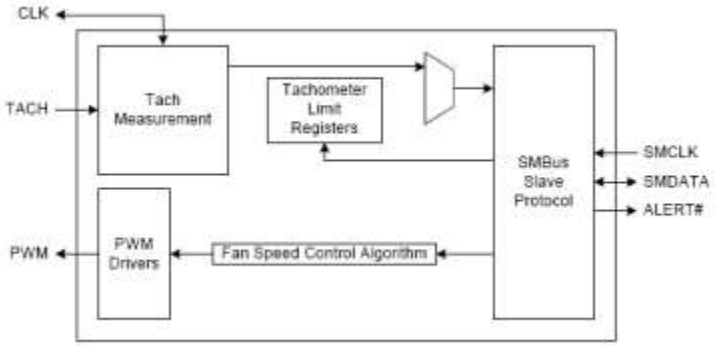

<< BACK

EMC2302

Online Datasheet

Features:

- Two Programmable Fan Control circuits
  - 4-wire fan compatible
  - High and low speed PWM
  - Optional detection of aging fans
  - Fan Spin Up Control and Ramp Rate Control
  - Alert on fan stall
- Watchdog Timer
- RPM-based fan control algorithm
  - 0.5% accuracy from 500 – 16k RPM (ext. xtal)
  - 1% accuracy from 500 – 16k RPM (int. clock)
- SMBUS 2.0 Interface
- CLK Pin can provide a clock source output
- 10-pin MSOP

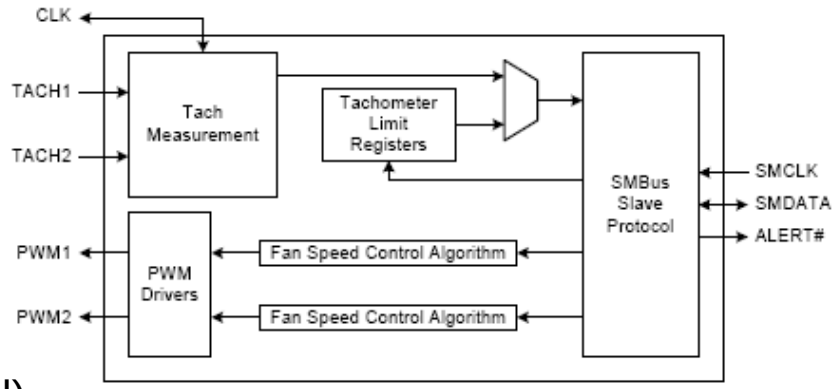

<< BACK

EMC2303

Online Datasheet

Features:

- Three Programmable Fan Control circuits
  - 4-wire fan compatible
  - High and low speed PWM
  - Optional detection of aging fans
  - Fan Spin Up Control and Ramp Rate Control
  - Alert on fan stall
- Watchdog Timer
- RPM-based fan control algorithm
  - 0.5% accuracy from 500 – 16k RPM (ext. xtal)
  - 1% accuracy from 500 – 16k RPM (int. clock)
- SMBUS 2.0 Interface
- CLK Pin can provide a clock source output
- 12-pin 4x4 QFN

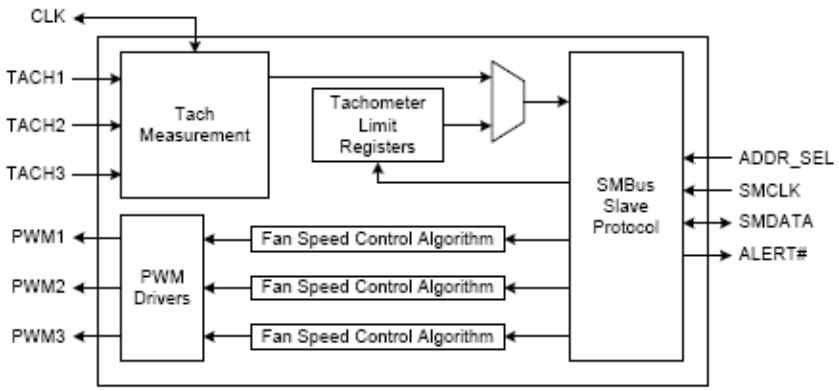

<< BACK

EMC2305

Online Datasheet

Features:

- Five Programmable Fan Control circuits
  - 4-wire fan compatible
  - High and low speed PWM
  - Optional detection of aging fans
  - Fan Spin Up Control and Ramp Rate Control
  - Alert on fan stall
- Watchdog Timer
- RPM-based fan control algorithm
  - 0.5% accuracy from 500 – 16k RPM (ext. xtal)
  - 1% accuracy from 500 – 16k RPM (int. clock)
- SMBUS 2.0 Interface
- CLK Pin can provide a clock source output
- 16-pin 4x4 QFN

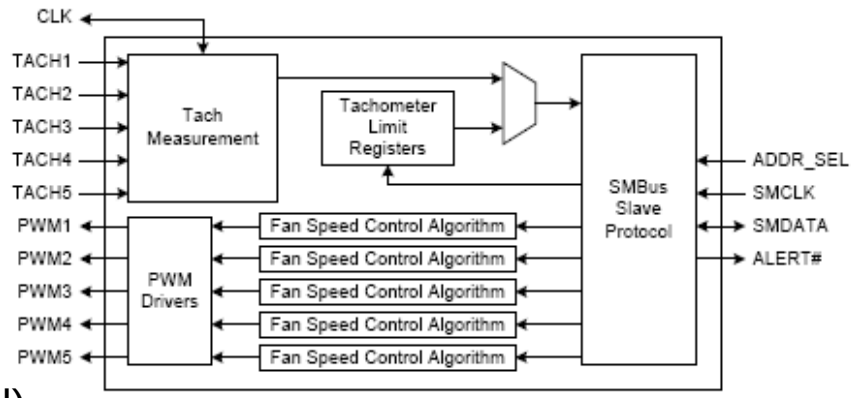

<< BACK

EMC2101

Online Datasheet

Features:

- 3.3V Operation
- Automatic Beta Compensation
- Resistance Error Correction
- Self-programming with EEPROM
- Selectable PWM or DAC fan driver output
- Temperature Monitors
    - External channel ±1°C accuracy
    - Internal channel ±2°C accuracy
- SMBus 2.0 Interface
- 8-pin MSOP and SOIC

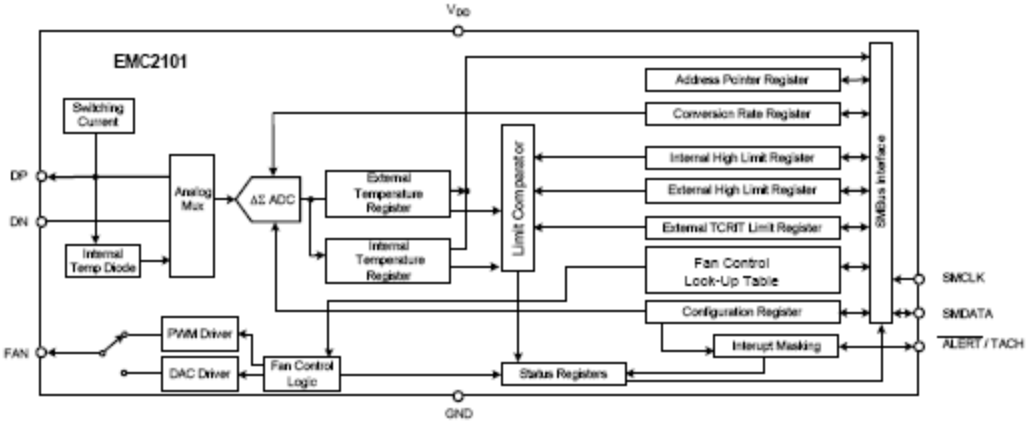

<< BACK

EMC2102

Online Datasheet

Features:

- Supports 45nm, 65nm, 90nm CPU Diodes
- Supports BJT and transistor models
- 3.0 – 3.6V Operation
- Closed-loop RMP based Fan Controller
- Integrated Linear Fan Driver
    - 600 mA drive capability
- HW Thermal Shutdown
- Reset Function on 5V Supply
- Three Remote Thermal Zones
    - ±1°C accuracy (60°C to 100°C)
    - 1°C Resolution
- Resistance Error Correction
- 28-pin 5x5 QFN

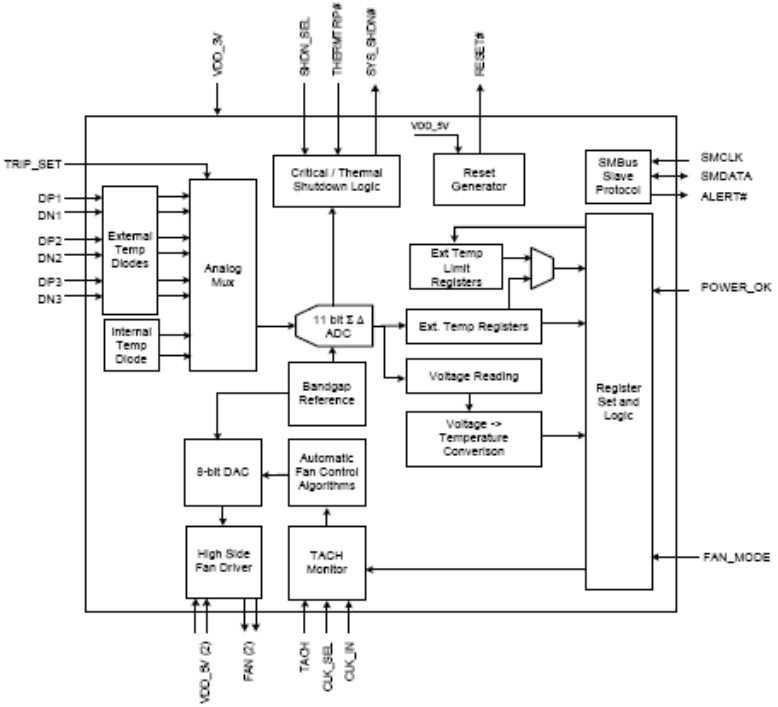

<< BACK

EMC2103

Online Datasheet

Features:

- 3.3V Operation
- Programmable Fan Control circuit
  - 4-wire fan compatible
  - High and low frequency PWM
- RPM-based fan control algorithm
  - 2.5% accuracy from 500 – 16k RPM
- Temperature Look-up Table
  - Controls fan speed or PWM drive
  - Supports DTS data from CPU
- Up to Three External Temperature Channels
  - Supports 45nm, 65nm, 90nm CPU Diodes
  - Supports BJT and transistor models
  - Resistance error correction
  - Supports discrete transistors (i.e. 2N3904)
  - ±1°C accuracy (60°C to 100°C)
  - 0.125°C Resolution
- Hardware Programmable Thermal Shutdown
- Internal Temperature Monitor
- SMBus 2.0 Interface
- 12-pin 4x4 QFN and 16-pin 4x4 QFN

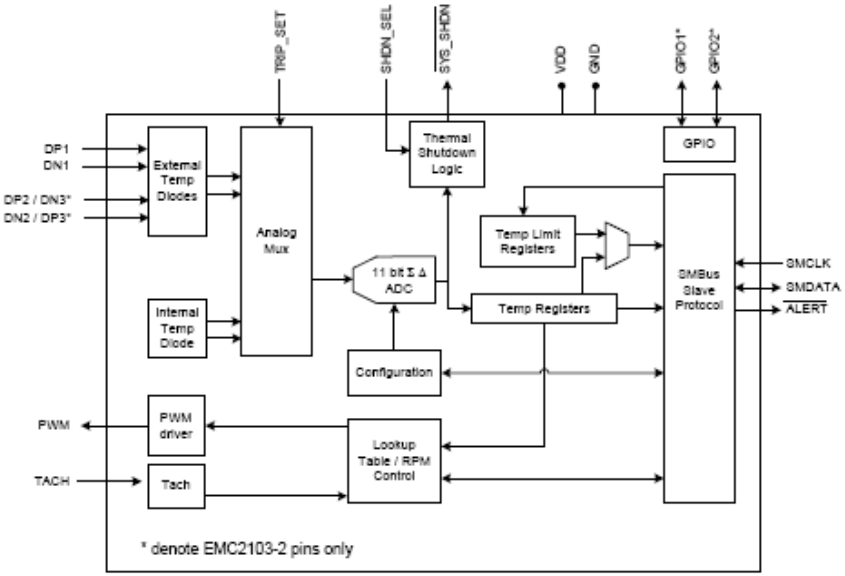

<< BACK

EMC2104

Online Datasheet

Features:

- 3.3V Operation
- Two Programmable Fan Control circuit
  - 4-wire fan compatible
  - High and low frequency PWM
- RPM-based fan control algorithm
  - 2.5% accuracy from 500 – 16k RPM
- Temperature Look-up Table
  - Controls fan speed or PWM drive
  - Supports DTS data from CPU
- Up to Four External Temperature Channels
  - Supports 45nm, 65nm, 90nm CPU Diodes
  - Supports BJT and transistor models
  - Resistance error correction
  - ±1°C accuracy (60°C to 100°C)
  - 0.125°C Resolution
- Up to three thermister compatible voltage inputs
- Hardware Programmable Thermal Shutdown
- Internal Temperature Monitor
- SMBus 2.0 Interface
- 20-pin 4x4 QFN

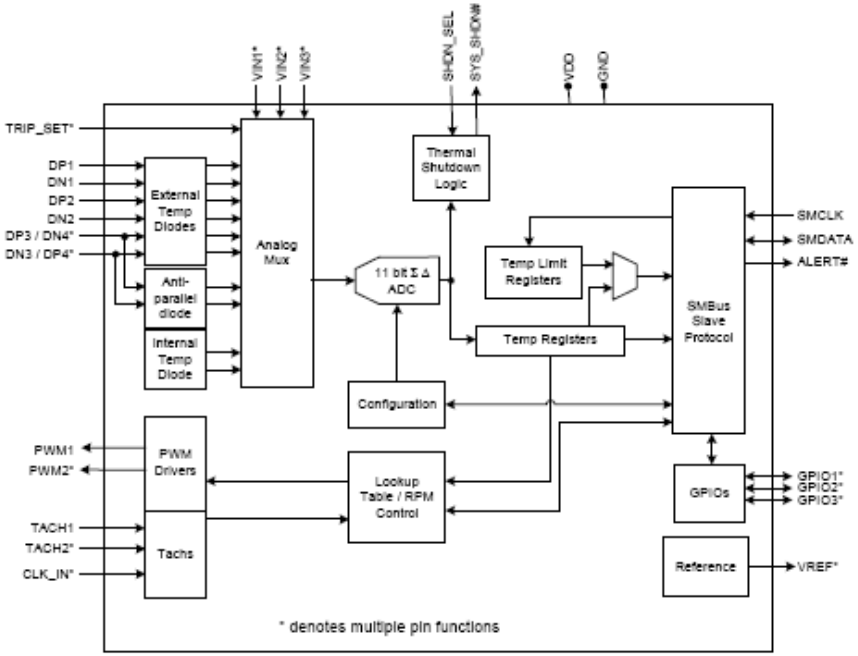

<< BACK

EMC2105

Online Datasheet

Features:

- 3.3V Operation
- Programmable Fan Control circuit
  - 600 mA, 5V, high side fan driver
- RPM based fan control algorithm
  - 2% accuracy from 500 – 16k RPM
- Temperature Look-up Table
  - 1 to 4 thermal zones
  - Controls fan speed or fan drive
  - Allows external data to control fan drivers including two DTS channels
- Up to Four External Temperature Channels
  - Supports 45nm, 65nm, 90nm CPU Diodes
  - Supports BJT and transistor models
  - Resistance error correction
  - ±1°C accuracy (60°C to 100°C)
  - 0.125°C Resolution
- SMBus 2.0 Interface
- 20-pin 4x4 QFN

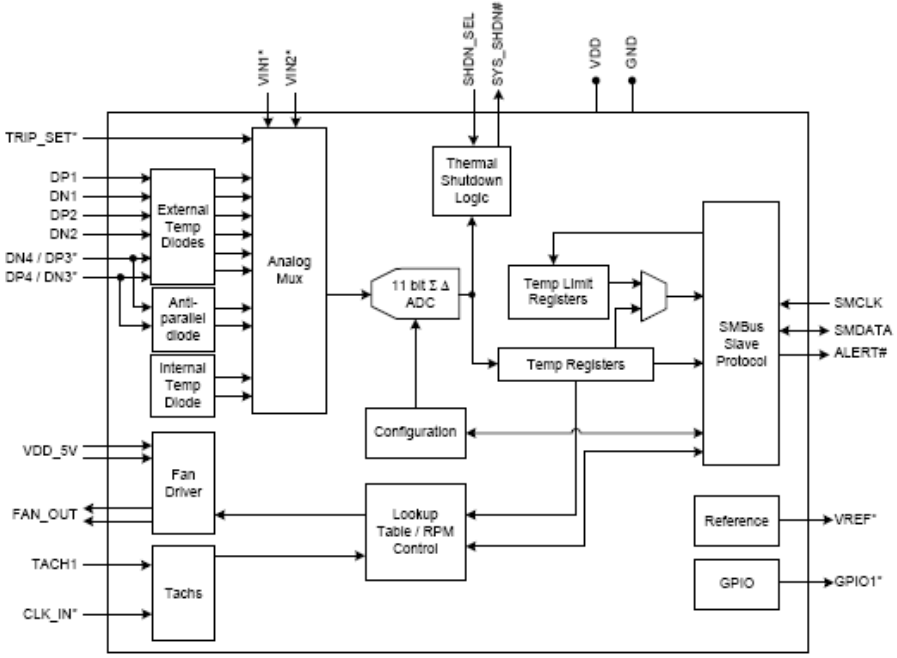

<< BACK

EMC2106

Online Datasheet

Features:

- 3.3V Operation
- Two Programmable Fan Control circuit
  - 4-wire fan compatible
  - High and Low speed PWM
  - 600 mA, 5V, high side fan driver
- RPM based fan control algorithm
  - 2% accuracy from 500 – 16k RPM
- Temperature Look-up Table
  - 1 to 4 thermal zones
  - Controls fan speed or fan drive
  - Allows external data to control fan drivers including two DTS channels
- Up to Four External Temperature Channels
  - Supports 45nm, 65nm, 90nm CPU Diodes
  - Supports BJT and transistor models
  - Resistance error correction
  - ±1°C accuracy (60°C to 100°C)
  - 0.125°C Resolution
- SMBus 2.0 Interface
- 28-pin 5x5 QFN

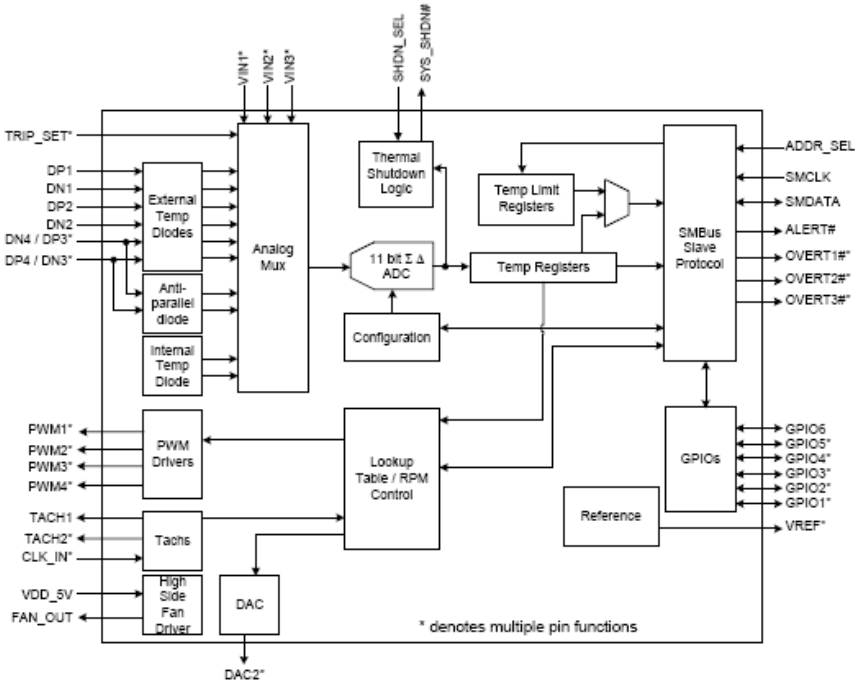

<< BACK

EMC6D102

Online Datasheet

Features:

- 3.3V Operation
- Fan Control
  - Three PWM Outputs
  - Four Fan Tachometer Inputs
  - Fan ramp rate control for noise reduction
- Temperature Monitor
  - Monitoring two remote thermal diodes
  - Internal ambient temperature measurement
- Voltage Monitor
  - Monitor power supplies (2.5V, 5V, 12V, Vcc)
- Power saving modes
- 5 VID (Voltage Identification Inputs)
- XNOR Tree Test Mode
- SMBus 2.0 Interface
- 24-pin SSOP

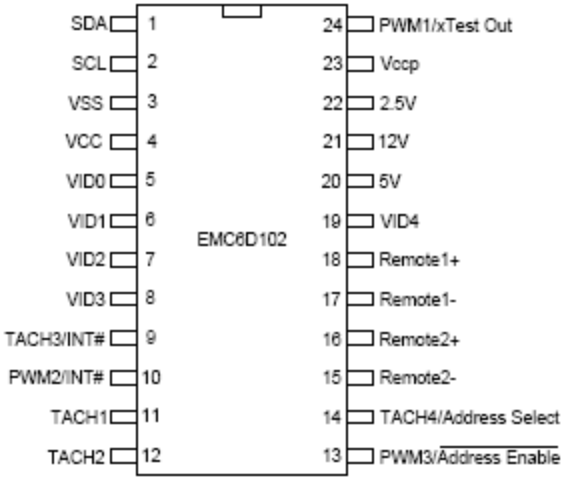

<< BACK

EMC6D103S

Online Datasheet

Features:

- 3.3V Operation
- Fan Control
  - Three PWM Outputs
  - Four Fan Tachometer Inputs
  - 4-wire fan compatible
  - Fan ramp rate control for noise reduction
- Temperature Monitor
  - Monitoring two remote thermal diodes
  - Internal ambient temperature measurement
  - Voltage Monitor
  - Monitor power supplies (2.5V, 5V, 12V, Vcc)
- Power saving modes
- 5 VID (Voltage Identification Inputs)
- XOR Tree Test Mode
- SMBus 2.0 Interface
- 24-pin SSOP

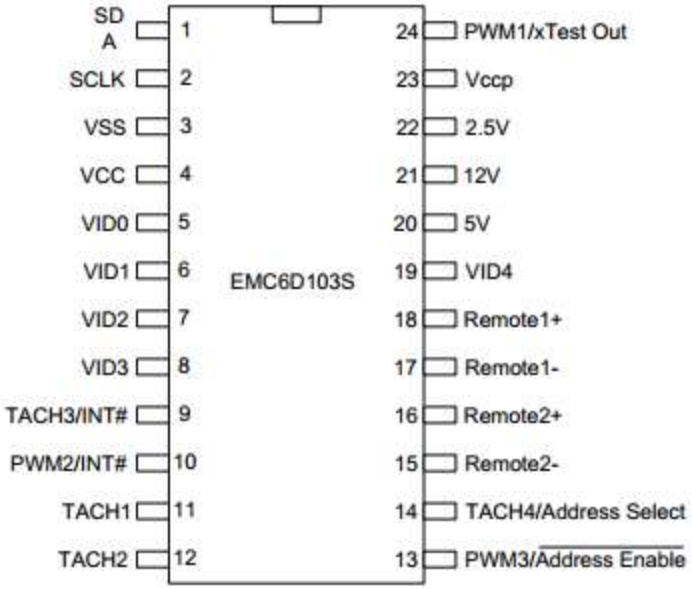

<< BACK

EMC1701

Online Datasheet

Features:

- High-side current sensor
  - Bi-directional current measurement
  - Measures bus voltage
  - 1% current measurement accuracy
  - Integrated over 82ms to 2.6sec,11-bit resolution
  - 3V to 24V voltage bus voltage range
- Calculates proportional power
- Independent hardware set instantaneous current peak detector (EMC1701-1 only)
  - Software controls to program time duration and magnitude threshold
- Power supply options
  - Bus or separately powered for low voltage operation
- Internal temperature monitor
  - ±1°C accuracy (-5°C < T_A < 85°C)
- ALERT# and THERM# outputs for temperature, voltage, and out-of-current limit reporting
- I2C/SMBus 2.0 Interface
- Industrial temperature range: -40°C to +85°C
- 10-pin MSOP, 12-pin 4x4 QFN

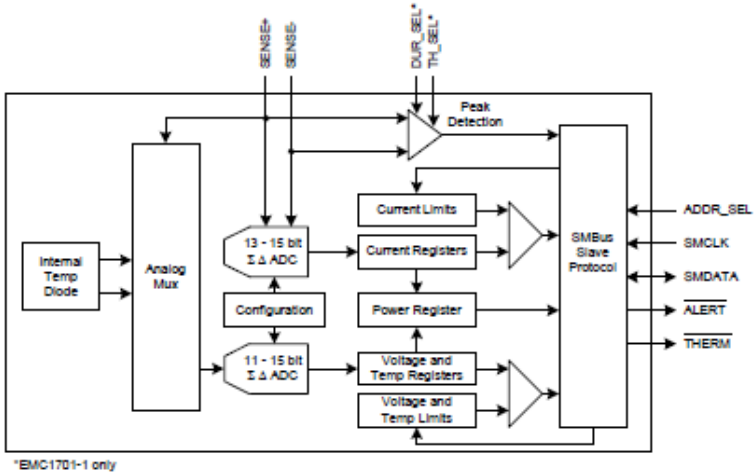

<< BACK

EMC1702

Online Datasheet

Features:

- High-side current sensor
  - Bi-directional current measurement
  - Measures bus voltage
  - 1% current measurement accuracy
  - Integrated over 82ms to 2.6sec,11-bit resolution
  - 3V to 24V voltage bus voltage range
- Calculates proportional power
- Independent hardware set instantaneous current peak detector
- Power supply options
  - Bus or separately powered for low voltage operation
- Internal temperature monitor
  - ±1°C accuracy (-5°C < T_A < 85°C)
- One external temperature monitor
  - 1°C accuracy (20°C < T_{DIODE} < 110°C) with 0.125°C resolution
- ALERT# and THERM# outputs for temperature, voltage, and out-of-current limit reporting
- I2C/SMBus 2.0 interface
- Industrial temperature range: -40°C to +85°C
- 12-pin 4x4 QFN

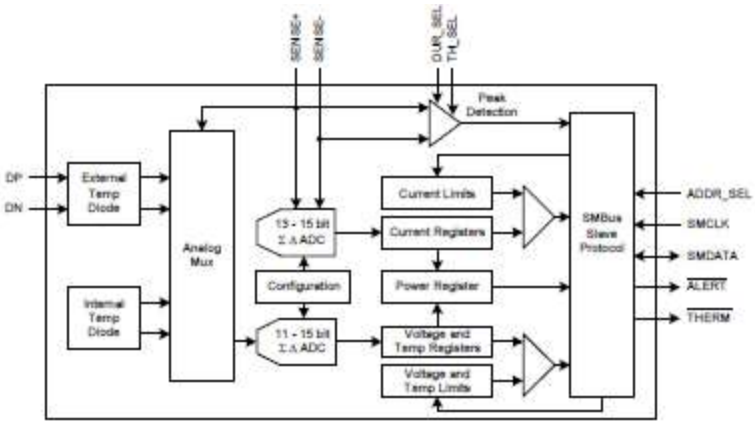

<< BACK

EMC1704

Online Datasheet

Features:

- High-side current sensor
  - Bi-directional current measurement
  - Measures bus voltage
  - 1% current measurement accuracy
  - Integrated over 82ms to 2.6sec,11-bit resolution
  - 3V to 24V voltage bus voltage range
- Calculates proportional power
- Independent hardware set instantaneous current peak detector
- Bus or separately powered for low voltage operation
- Internal temperature monitor
  - ±1°C accuracy (-5°C < T_A < 85°C)
- Up to 3 external temperature monitor
  - 1°C accuracy (20°C < T_{DIODE} < 110°C) with 0.125°C resolution
- ALERT# and THERM# outputs for temperature, voltage, and out-of-current limit reporting
- General puprose I/O
- I2C/SMBus 2.0 interface
- Industrial temperature range: -40°C to +85°C
- 14-pin SOIC, 16-pin 4x4 QFN

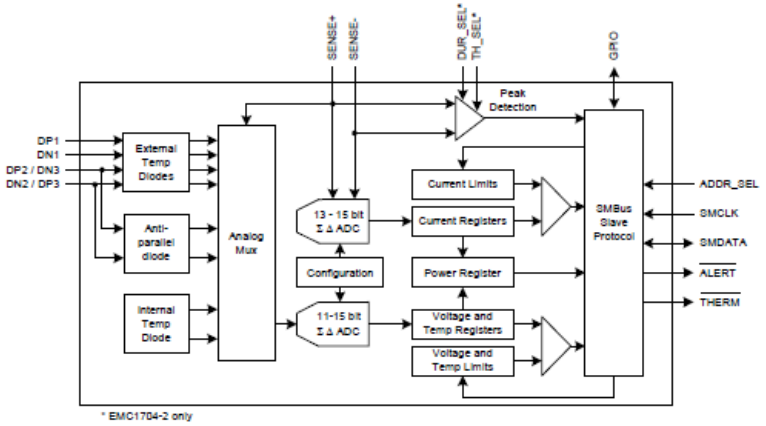

<< BACK

PAC1710

Online Datasheet

Features:

- High-side current sensor
  - Current measurement is integrated over 2.5ms to 2.6sec with up to 11-bit resolution
  - 1% current measurement accuracy in positive range
  - Measures V_{SOURCE} voltage
- Calculates proportional power
- V_{SOURCE} voltage range 0V to 40V
  - Bi-directional current sensing
- Auto-zero input offset voltage
- Digital averaging
- 5µA typical Standby current
- Programmable sense voltage range
  - ±10mV, ±20mV, ±40mV, and ±80mV
- Industrial temperature range: -40°C to +85°C
- ALERT# output for voltage and current out of limit transients
- SMBus 2.0 communications interface
- Sample time configurable from 2.5ms-320ms
  - With averaging effective sampling times up to 2.6sec
- Power supply range 3.0V to 5.5V
- 10-pin 3x3 DFN

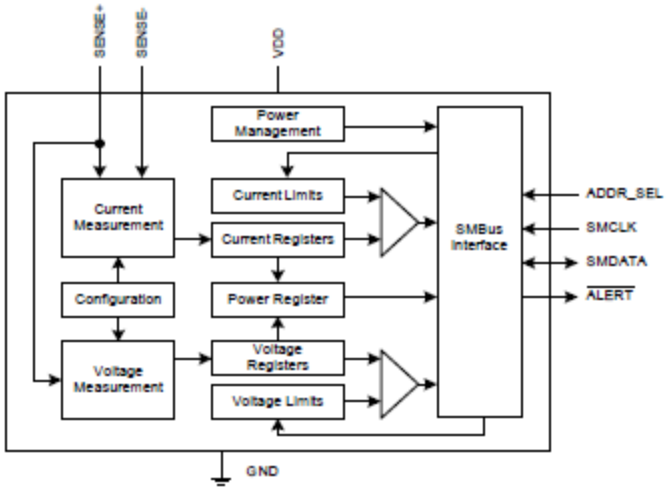

<< BACK

PAC1720

Online Datasheet

Features:

- Dual High-side current sensor
  - Current measurement is integrated over 2.5ms to 2.6sec with up to 11-bit resolution
  - 1% current measurement accuracy in positive range
  - Measures V_{SOURCE} voltage
- Calculates proportional power
- V_{SOURCE} voltage range 0V to 40V
  - Bi-directional current sensing
- Auto-zero input offset voltage
- Digital averaging
- 5µA typical Standby current
- Programmable sense voltage range
  - ±10mV, ±20mV, ±40mV, and ±80mV
- Industrial temperature range: -40°C to +85°C
- ALERT# output for voltage and current out of limit transients
- SMBus 2.0 communications interface
- Sample time configurable from 2.5ms-320ms
  - With averaging effective sampling times up to 2.6sec
- Power supply range 3.0V to 5.5V
- 10-pin 3x3 DFN

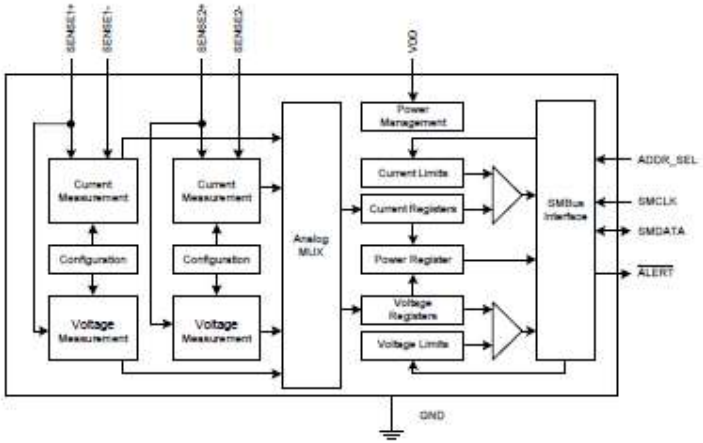

<< BACK

PAC1921

Online Datasheet

Features:

- High-side current sensor
  - Power, current & voltage available on 2-wire and configurable analog output
  - 100mV full scale current sense voltage range
  - 1% power measurement accuracy
  - 2nd order ΔΣ ADC : 11- or 14-bit resolution
  - Selectable current gain:1X - 128X
- Configurable measurement type output:
  - Measured power, current, or bus voltage
  - Output voltage range 1V, 1.5V, 2V, or 3V
- 2 Wire digital, I2C compatible
- Bus range 0V to 32V
- Power supply
  - VDD = 3.3V nominal, (3V-5.5V)

3x3 VDFN*

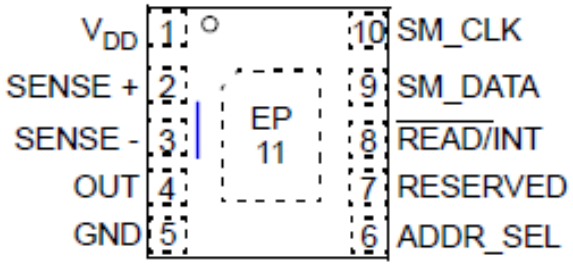

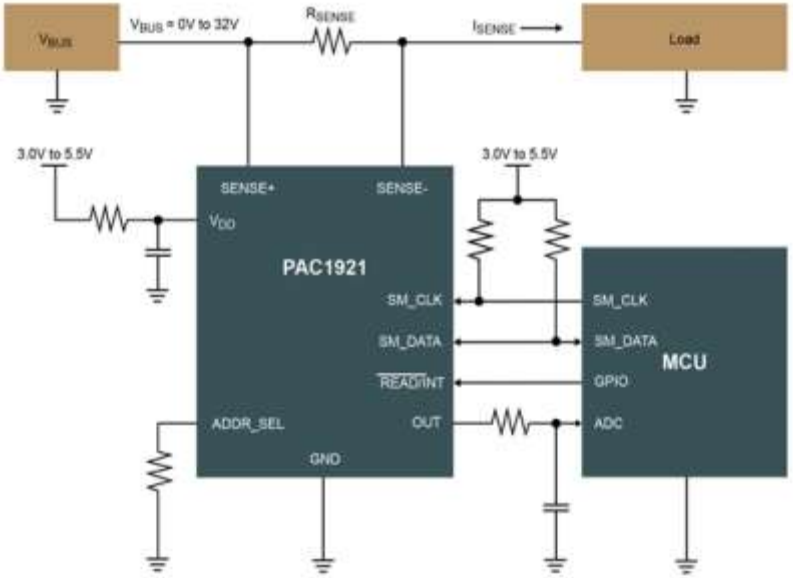

<< BACK

UCS1001

Online Datasheet

Features:

- Port power switch with two current limit behaviors
  - 2.9 V to 5.5 V source voltage range
  - Up to 2.5 A current with 55 mΩ On Resistance
  - Over-current trip or constant current limiting
  - Soft turn-on circuitry
  - Selectable current limit
  - Dynamic thermal management
  - Under- and over-voltage lockout
  - Back-drive, back-voltage protection
  - Latch or auto-recovery (low test current) fault handling
  - Selectable active high or low power switch enable
  - BC1.2 VBUS discharge port renegotiation function
- Selectable/automatic cycling of USB data line charger emulation profiles
  - USB-IF BC1.2 charging downstream port (CDP) and dedicated charging port (DCP) modes, YD/T-1591, and most Apple® and RIM® protocols standard
  - USB 2.0 compliant high-speed data switch (in Passthrough and CDP modes)
  - Nine preloaded charger emulation profiles for maximum compatibility coverage of peripheral devices
- Charging Active (UCS1001-1) or Attach Detection (UCS1001-2) open-drain output
- Fault Alert open-drain output
- Ultra low power Sleep state
- Optional split supply support for VBUS and VDD for low power in system standby states
- Wake on Attach USB (UCS1001-2)
- Industrial temperature range: -40°C to +85°C
- IEC61000-4-2 8 / 15 kV ESD immunity
- UL recognized and EN/IEC 60950-1 (CB) certified

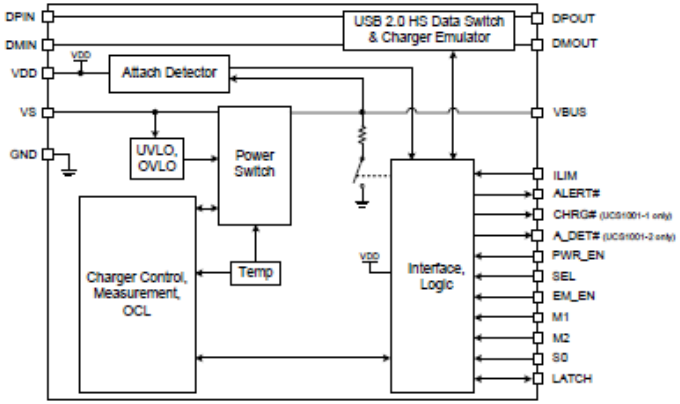

<< BACK

UCS1002

Online Datasheet

Features:

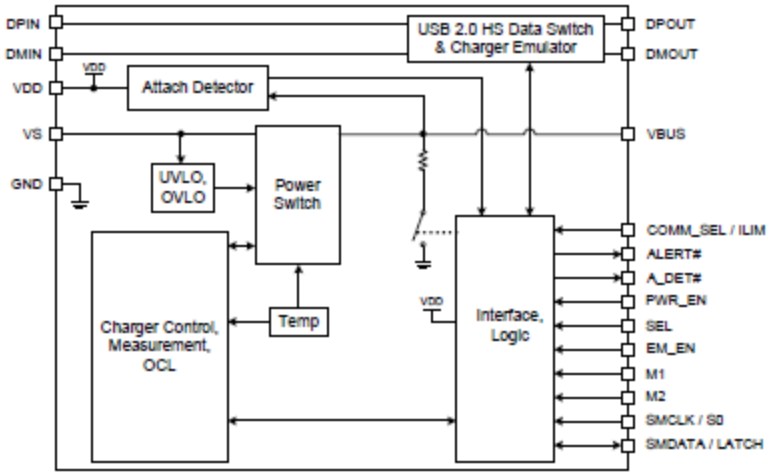

- Port power switch with two current limit behaviors
  - 2.9 V to 5.5 V source voltage range
  - Up to 2.5 A current with 55 mΩ On Resistance
  - Over-current trip or constant current limiting
  - Soft turn-on circuitry
  - Programmable current limit
  - Dynamic thermal management
  - Under- and over-voltage lockout
  - Back-drive, back-voltage protection
  - Latch or auto-recovery (low test current) fault handling
  - BC1.2 VBUS discharge port renegotiation function
- Selectable/automatic cycling of USB data line charger emulation profiles
  - USB-IF BC1.2 charging downstream port (CDP) and dedicated charging port (DCP) modes, YD/T-1591, and most Apple® and RIM® protocols standard; others as defined via the SMBus 2.0/I^{2}C®
  - USB 2.0 compliant high-speed data switch (in Passthrough and CDP modes)
  - Nine preloaded charger emulation profiles for maximum compatibility
  - One custom programmable charger profile for portable device support
- Self-contained current monitoring and charge rationing for power allocation applications
- Automatic shutdown when Battery Full option and low power Sleep state
- Low power Attach Detection and open-drain A_DET# pin
- Optional split supply support for VBUS and VDD for low power in system standby states
- Wake on Attach USB
- SMBus 2.0/I^{2}C communications
- Wide operating temperature range: -40°C to +85°C
- IEC61000-4-2 8 / 15 kV ESD immunity
- UL recognized and EN/IEC 60950-1 (CB) certified

<< BACK

UCS81001/2

Online Datasheet

Features:

- Port power switch with two current limit behaviors
  - 2.9 V to 5.5 V source voltage range
  - Up to 2.5 A current with 55 mΩ On Resistance
  - Over-current trip or constant current limiting
  - Soft turn-on circuitry
  - Programmable current limit
  - Dynamic thermal management
  - Under- and over-voltage lockout
  - Back-drive, back-voltage protection
  - Latch or auto-recovery (low test current) fault handling
  - BC1.2 VBUS discharge port renegotiation function
- Selectable/automatic cycling of USB data line charger emulation profiles
  - USB-IF BC1.2 charging downstream port (CDP) and dedicated charging port (DCP) modes, YD/T-1591, and most Apple® and RIM® protocols standard; others as defined via the SMBus 2.0/I^{2}C®
  - USB 2.0 compliant high-speed data switch (in Passthru, SDP, CDP modes)
  - Nine preloaded charger emulation profiles for maximum compatibility
  - One custom programmable charger profile for portable device support
- Self-contained current monitoring and charge rationing for power allocation applications
- Automatic shutdown when Battery Full option and low power Sleep state
- Low power Attach Detection and open-drain A_DET# pin
- Optional split supply support for VBUS and VDD for low power in system standby states
- Wake on Attach USB
- UCS81002 issues an Alert on Reset
- SMBus 2.0/I^{2}C communications
- Wide operating temperature range: -40°C to +85°C
- IEC61000-4-2 8 / 15 kV ESD immunity

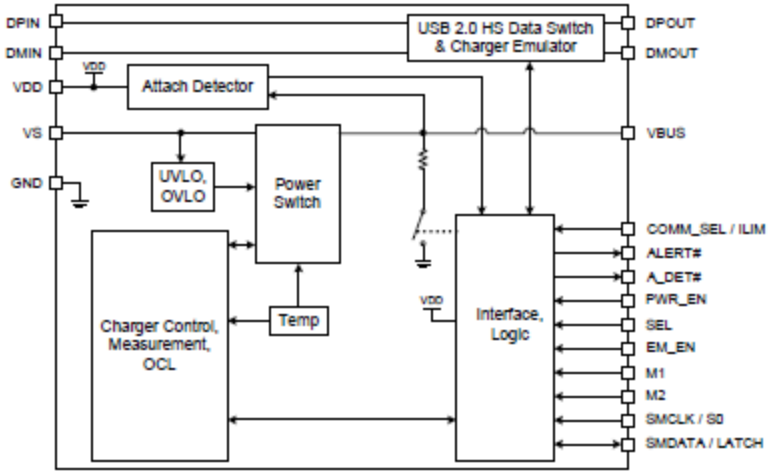

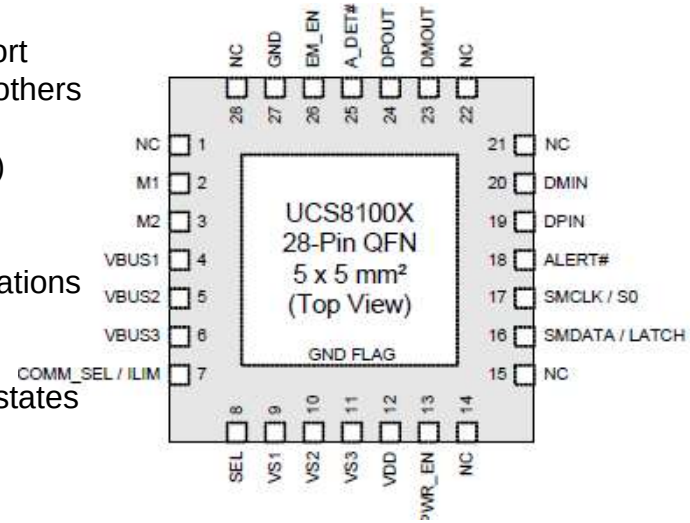

<< BACK

UCS1003

Online Datasheet

Features:

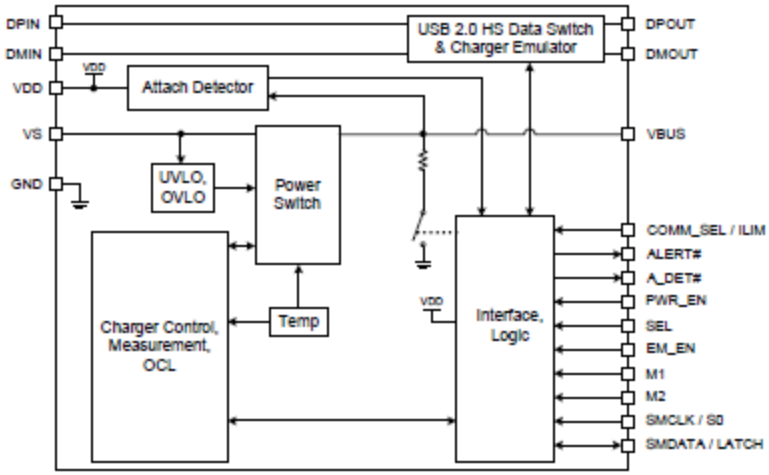

- Port power switch with two current limit behaviors
  - 2.9 V to 5.5 V source voltage range
  - Up to 2.7 A current with 55 mΩ On Resistance
  - Over-current trip or constant current limiting
  - Soft turn-on circuitry
  - Programmable current limit
  - Dynamic thermal management
  - Under- and over-voltage lockout
  - Back-drive, back-voltage protection
  - Latch or auto-recovery (low test current) fault handling
  - BC1.2 VBUS discharge port renegotiation function
- Selectable/automatic cycling of USB data line charger emulation profiles
  - USB-IF BC1.2 charging downstream port (CDP) and dedicated charging port (DCP) modes, YD/T-1591, and most Apple®, Samsung and RIM® protocols standard; others as defined via the SMBus 2.0/I^2C®
  - USB 2.0 compliant high-speed data switch (in Passthrough and CDP modes)
  - Nine preloaded charger emulation profiles for maximum compatibility
  - One custom programmable charger profile for portable device support
- Self-contained current monitoring and charge rationing for power allocation applications
- Automatic shutdown when Battery Full option and low power Sleep state
- Low power Attach Detection and open-drain A_DET# pin
- Optional split supply support for VBUS and VDD for low power in system standby states
- Wake on Attach USB
- SMBus 2.0/I^2C communications
- Wide operating temperature range: -40°C to +85°C

<< BACK

UCS81003

Online Datasheet

Features:

- Port power switch with two current limit behaviors
  - 2.9 V to 5.5 V source voltage range
  - Up to 2.7 A current with 55 mΩ On Resistance
  - Over-current trip or constant current limiting
  - Soft turn-on circuitry
  - Programmable current limit
  - Dynamic thermal management
  - Under- and over-voltage lockout
  - Back-drive, back-voltage protection
  - Latch or auto-recovery (low test current) fault handling
  - BC1.2 VBUS discharge port renegotiation function
- Selectable/automatic cycling of USB data line charger emulation profiles
  - USB-IF BC1.2 charging downstream port (CDP) and dedicated charging port (DCP) modes, YD/T-1591, and most Apple®, Samsung and RIM® protocols standard; others as defined via the SMBus 2.0/I^{2}C®
  - USB 2.0 compliant high-speed data switch (in Passthru, SDP, CDP modes)
  - Nine preloaded charger emulation profiles for maximum compatibility
  - One custom programmable charger profile for portable device support
- Self-contained current monitoring and charge rationing for power allocation applications
- Automatic shutdown when Battery Full option and low power Sleep state
- Low power Attach Detection and open-drain A_DET# pin
- Optional split supply support for VBUS and VDD for low power in system standby states
- Wake on Attach USB
- SMBus 2.0/I^{2}C communications
- Wide operating temperature range: -40°C to +85°C
- IEC61000-4-2 8 / 15 kV ESD immunity

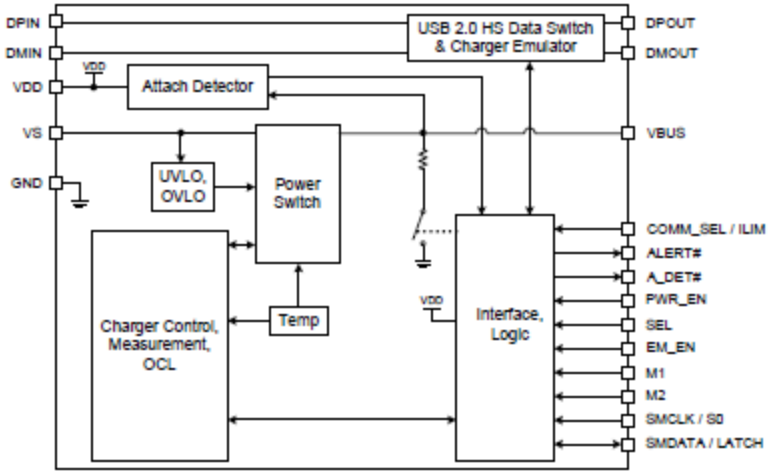

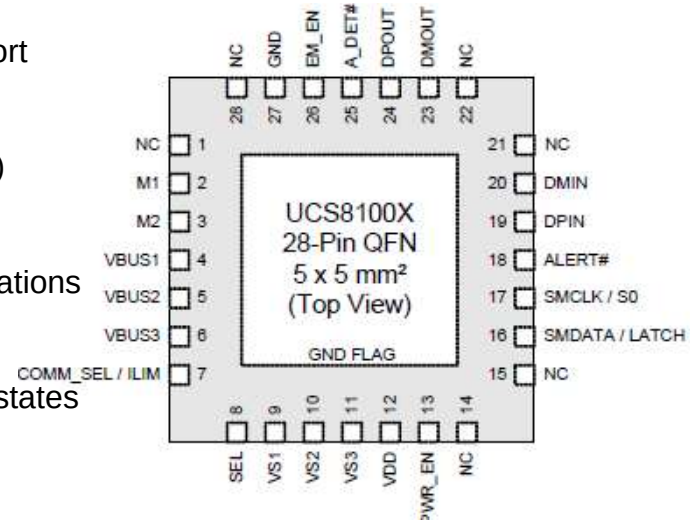

<< BACK

TC620/TC621

Online Datasheet

Features:

- User Programmable Hysteresis and Temperature Set Point
- Easily Programs with 2 External Resistors
- Wide Temperature Detection Range:
  0°C to 70°C: (TC620/TC621CCX)
  -40°C to +125°C: (TC620/TC621CVX)
  -40°C to +85°C: (TC620/TC621CEX)
  -55°C to +125°C: (TC620/TC621CMX)
- Onboard Temperature Sensing Applications (TC620X)
- External NTC Thermistor for Remote Sensing Applications (TC621X)
- Available in 8-Pin PDIP and SOIC Packages

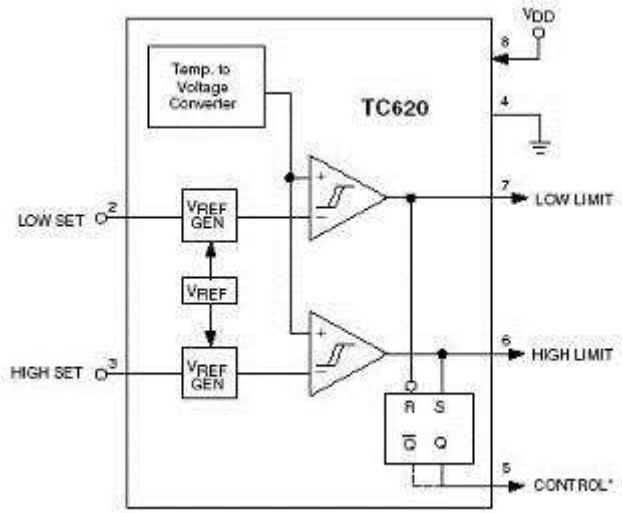

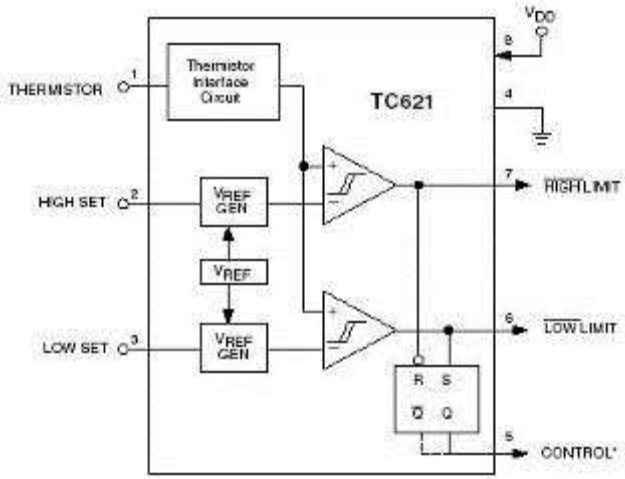

<< BACK

TC622/4

Online Datasheet

Features:

- Temperature Set Point Easily Programs with a Single External Resistor
- Operates with 2.7V Power Supply (TC624)
- TO-220 Package for Direct Mounting to Heatsink (TC622XAT) or Standard 8-Pin PDIP and SOIC

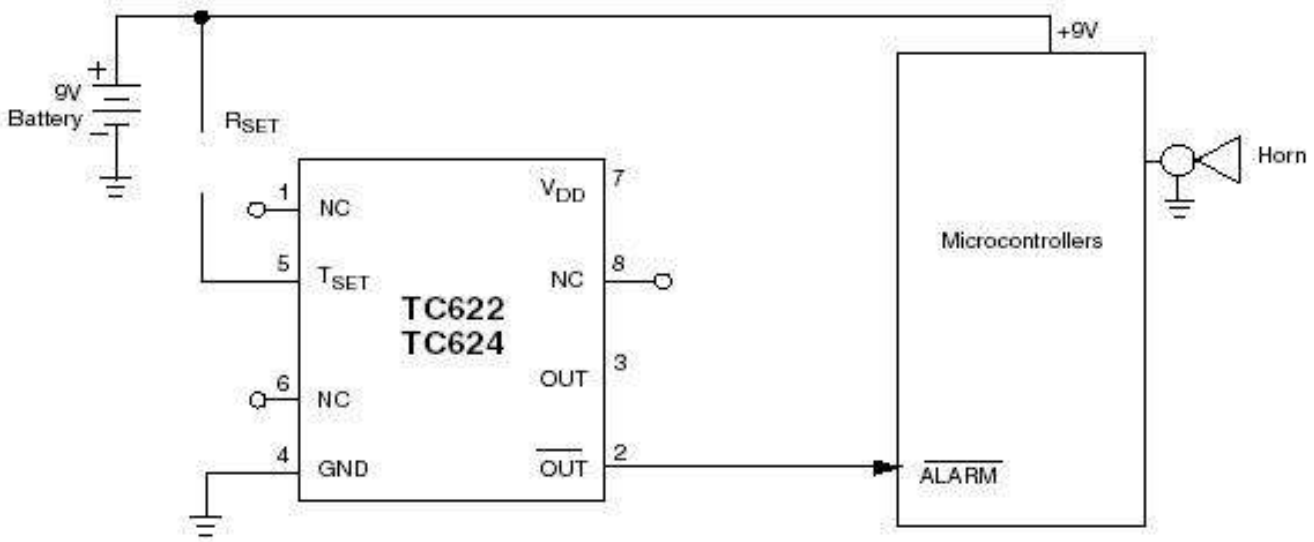

<< BACK

TC623

Online Datasheet

Features:

- Integrated Temp Sensor and Detector Operate from a Supply Voltage as Low as 2.7V
- Replaces Mechanical Thermostats and Switches
- On-Chip Temperature Sense
- 8-Pin DIP or SOIC for Direct PCB Mounting
- 2 User Programmable Temperature Set Points
- 2 Independent Temperature Limit Outputs
- Heat/Cool Regulate Output

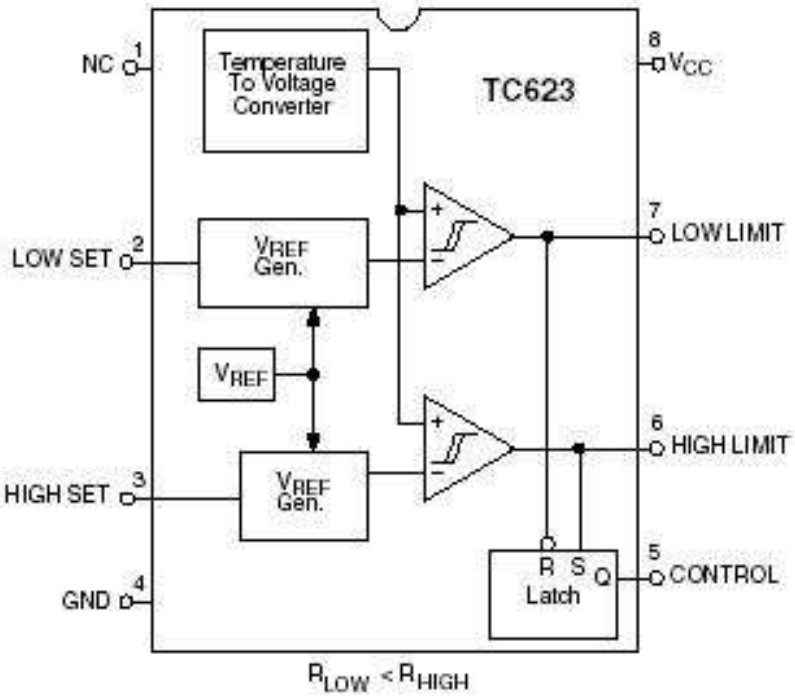

<< BACK

MCP9700/9701
MCP9700A/9701A

Online Datasheet

Features:

- Tiny Analog Temperature Sensor
- Available Packages: SC-70-5, SOT-23-5, TO-92-3
- Wide Temperature Measurement Range:
  -40°C to +125°C
- Accuracy:
  ±2°C (max.), 0°C to +70°C (**MCP9700A/9701A)**
  ±4°C (max.), 0°C to +70°C (**MCP9700/9701**)
- Optimized for Analog-to-Digital Converters (ADCs):
  10.0 mV/°C (typ.) **MCP9700/9700A**
  19.5 mV/°C (typ.) **MCP9701/9701A**
- Wide Operating Voltage Range:
  VDD = 2.3V to 5.5V **MCP9700/9700A**
  VDD = 3.1V to 5.5V **MCP9701/9701A**
- Low Operating Current: 6 µA (typ.)
- Optimized to Drive Large Capacitive Loads

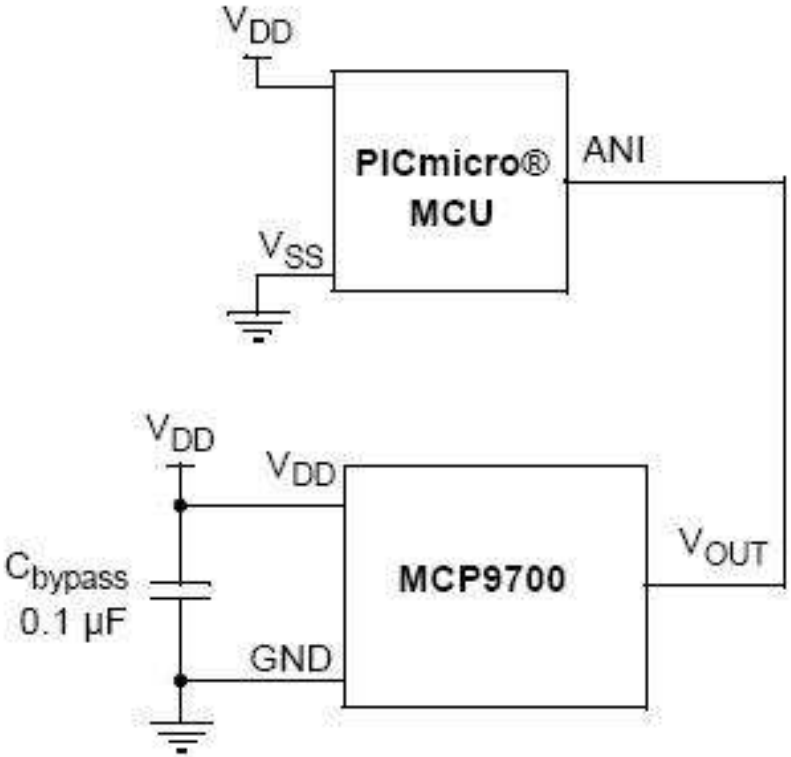

<< BACK

TC72

Online Datasheet

Features:

- Temperature-to-Digital Converter
- SPI™ Compatible Interface
- 10-Bit Resolution (0.25°C/Bit)
- ±2°C (max.) Accuracy from -40°C to +85°C
- ±3°C (max.) Accuracy from -55°C to +125°C
- 2.65V to 5.5V Operating Range
- Low Power Consumption:
  - 250µA (typ.) Continuous Temperature Conversion Mode
  - 1µA (max.) Shutdown Mode
- Power Saving One-Shot Temperature Measurement
- Industry Standard 8-Pin MSOP Package
- Space Saving 8-Pin DFN (3x3 mm) Package

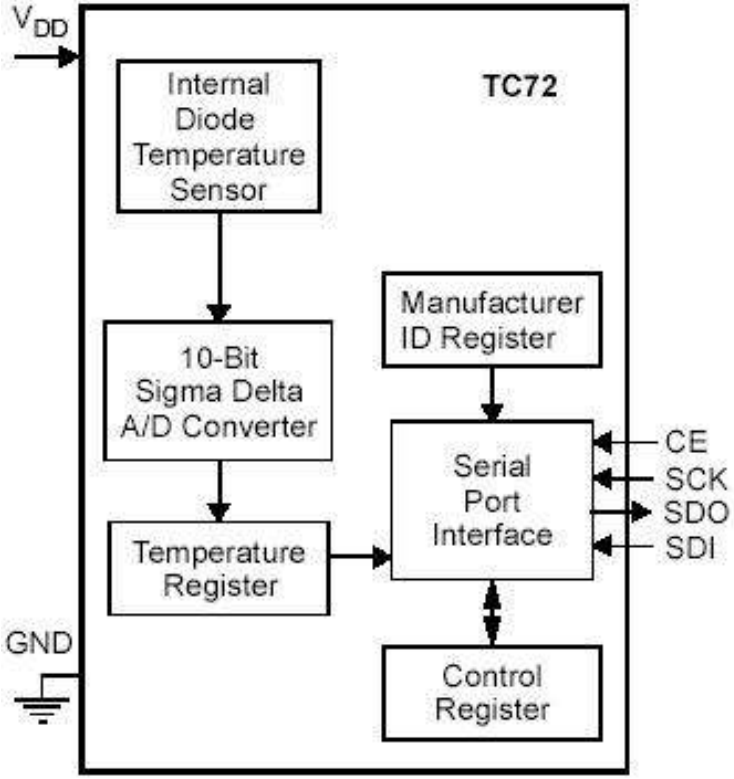

<< BACK

TC74

Online Datasheet

Features:

- Digital Temperature Sensing in SOT-23-5 or TO-220 Packages
- Outputs Temperature as an 8-Bit Digital Word
- Simple SMBus/I²C™ Serial Port Interface
- Solid-State Temperature Sensing:
  ±2°C (max.) Accuracy from +25°C to +85°C
  ±3°C (max.) Accuracy from 0°C to +125°C
- 2.65V to 5.5V Operating Range
- Supply voltage of 2.7V to 5.5V
- Low Power Consumption:
  250µA (typ.) Operating Current
  1µA (max.) Standby Mode Current

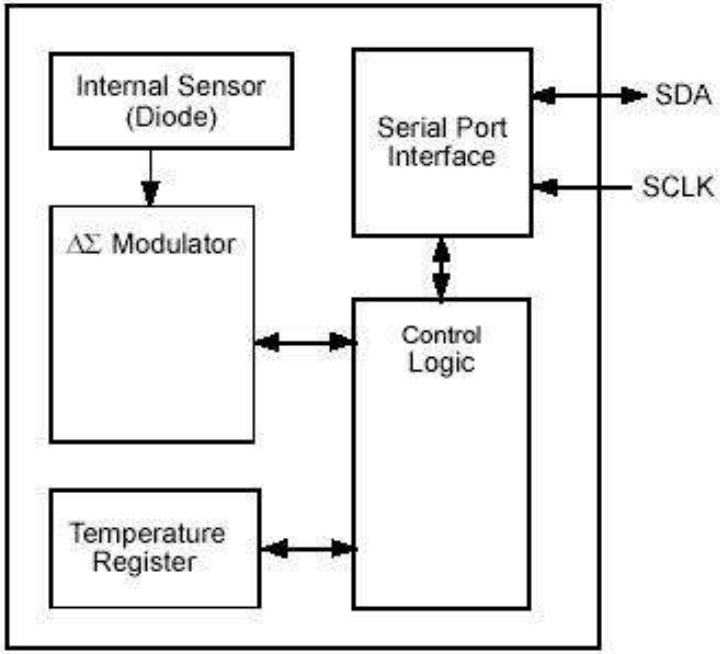

<< BACK

TCN75A

Online Datasheet

Features:

- Temperature-to-Digital Converter
- Accuracy:
  ±1°C (typ.) from -40°C to +125°C
  ±2°C (max.) from -40°C to +125°C
- User-selectable Resolution:
  0.5°C to 0.0625°C
- Operating Voltage Range: 2.7V to 5.5V
- 2-wire Interface: I^2C™ Compatible
- Operating Current: 200µA (typ.)
- Shutdown Current: 2µA (max.)
- Power-saving One-shot Temperature Measurement
- Available Packages: MSOP-8, SOIC-8

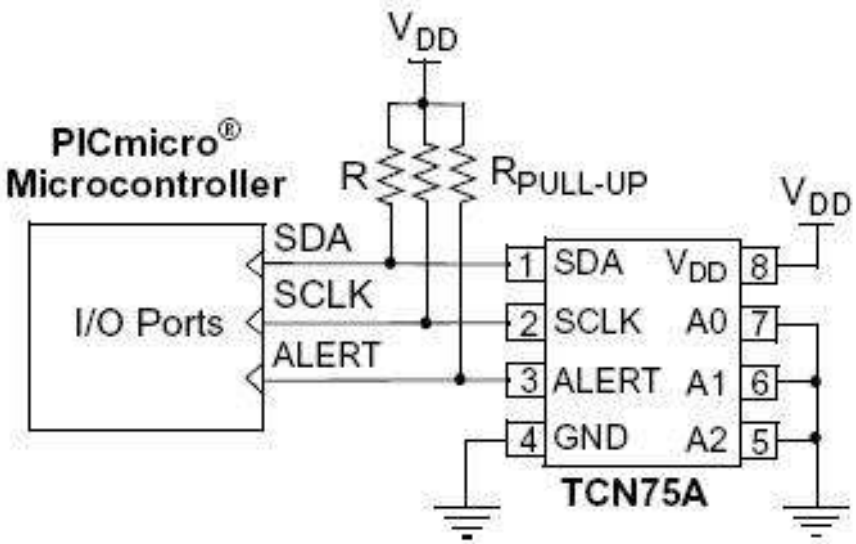

<< BACK

AT30TS74

Online Datasheet

Features:

- Temperature-to-Digital Converter
- High Accuracy with 12-bit Resolution
  ±2°C (max.) accuracy from -20°C to +100°C
  ±3°C (max.) accuracy from -40°C to +125°C
- User-selectable Resolution: 9 - 12 bit
- 1.7V to 5.5V Operating Voltage Range
- 2-wire Interface: 3.4MHz I^2C™, SMBus Compatible
- Low Power
  85µA (typ.) Operating Current
  1µA (typ.) Shutdown Mode
- Power-saving One-shot Temperature Measurement
- Built-in noise Suppression Filtering for Clock and Data Input Signals
- Pin and Software Compatible to Industry standard LM75-type Devices
- Available Packages: SOIC-8, MSOP-8, 2x3 DFN-8, 4-ball WLCSP, 5-ball WLCSP

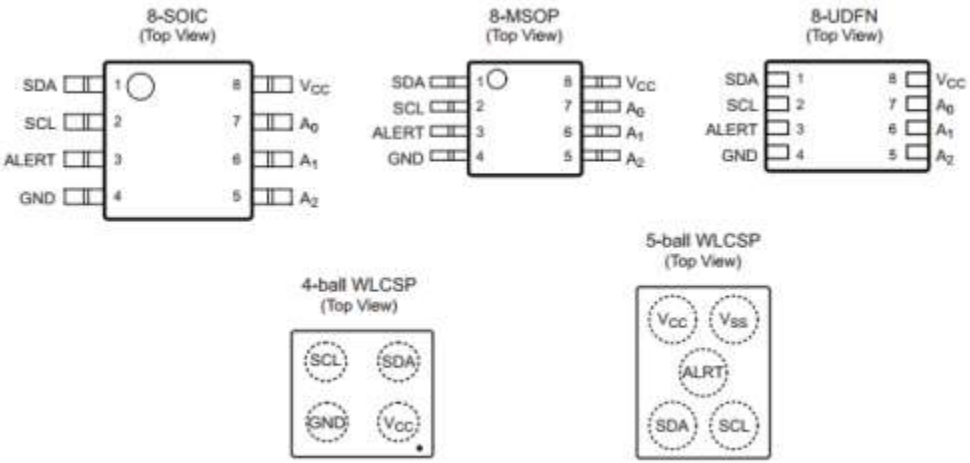

<< BACK

AT30TS75A

Online Datasheet

Features:

- Temperature-to-Digital Converter
- High Accuracy with 12-bit Resolution
  ±1°C (max.) accuracy from 0°C to +85°C
  ±2°C (max.) accuracy from -25°C to +105°C
  ±3°C (max.) accuracy from -40°C to +125°C
- User-selectable Resolution: 9 - 12 bit
- 1.7V to 5.5V Operating Voltage Range
- 2-wire Interface: 3.4MHz I²C™, SMBus Compatible
- Low Power
  85µA (typ.) Operating Current
  1µA (typ.) Shutdown Mode
- Power-saving One-shot Temperature Measurement
- Built-in noise Suppression Filtering for Clock and Data Input Signals
- Pin and Software Compatible to Industry standard LM75-type Devices
- Available Packages: SOIC-8, MSOP-8, 2x3 DFN-8

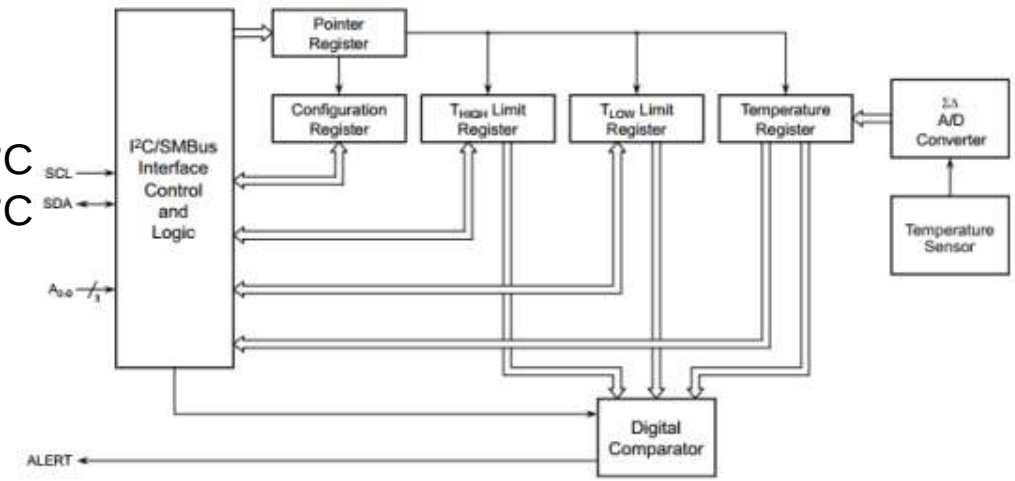

<< BACK

AT30TS750A

Online Datasheet

Features:

- Temperature-to-Digital Converter
- High Accuracy with 12-bit Resolution
  ±1°C (max.) accuracy from 0°C to +85°C
  ±2°C (max.) accuracy from -25°C to +105°C
  ±3°C (max.) accuracy from -40°C to +125°C
- Nonvolatile Registers to Retain User-Configured or Power-up Defaults
- User-selectable Resolution: 9 - 12 bit
- 1.7V to 5.5V Operating Voltage Range
- 2-wire Interface: I^2C™, SMBus Compatible
- Low Power
  75µA (typ.) Operating Current
  1µA (typ.) Shutdown Mode
- Power-saving One-shot Temperature Measurement
- Pin and Software Compatible to Industry standard LM75-type Devices
- Available Packages: SOIC-8, MSOP-8, 2x3 DFN-8

Nonvolatile Registers

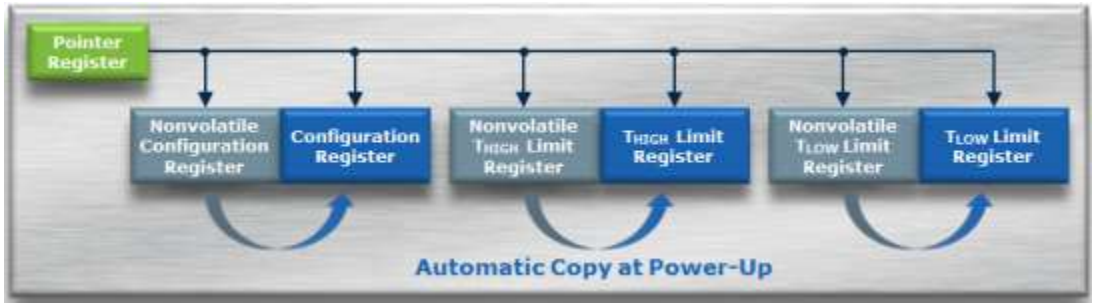

<< BACK

TC77

Online Datasheet

Features:

- Digital Temperature Sensing in 5-Pin SOT-23A and 8-Pin SOIC Packages
- Outputs Temperature as a 13-Bit Digital Word
- SPI and MICROWIRE™ Compatible Interface
- Solid State temperature Sensing
  ±1°C (max.) accuracy from +25°C to +65°C
  ±2°C (max.) accuracy from -40°C to +85°C
  ±3°C (max.) accuracy from -55°C to +125°C
- 2.7V to 5.5V Operating Voltage Range
- Lower Power
  250µA (typ.) Continuous Conversion Mode
  0.1µA (typ.) Shutdown Mode

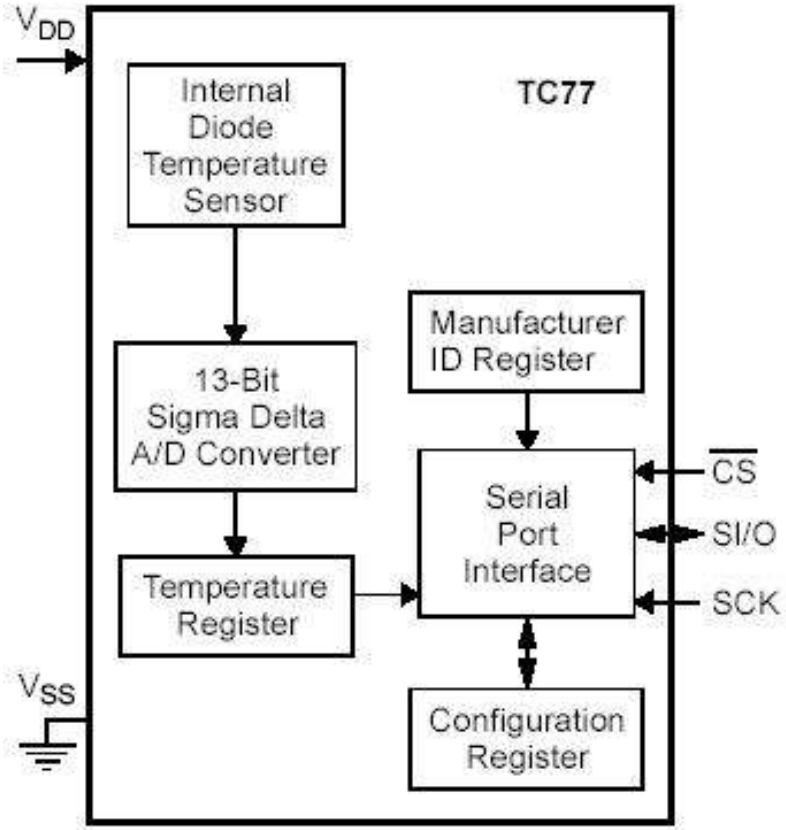

<< BACK

MCP9800/1/2/3

Online Datasheet

Features:

- Temperature-to-Digital Converter
- Accuracy with 12-bit Resolution
  ±1°C (max.) accuracy from -10°C to +85°C
  ±2°C (max.) accuracy from -10°C to +125°C
  ±3°C (max.) accuracy from -55°C to +125°C
- User-selectable Resolution: 9 - 12 bit
- 2.7V to 5.5V Operating Voltage Range
- 2-wire Interface: I²C™/SMBus Compatible
- Lower Power
  200µA (typ.) Operating Current
  1µA (max.) Shutdown Mode
- Power-saving One-shot Temperature Measurement
- Available Packages: SOT-23-5, MSOP-8, SOIC-8

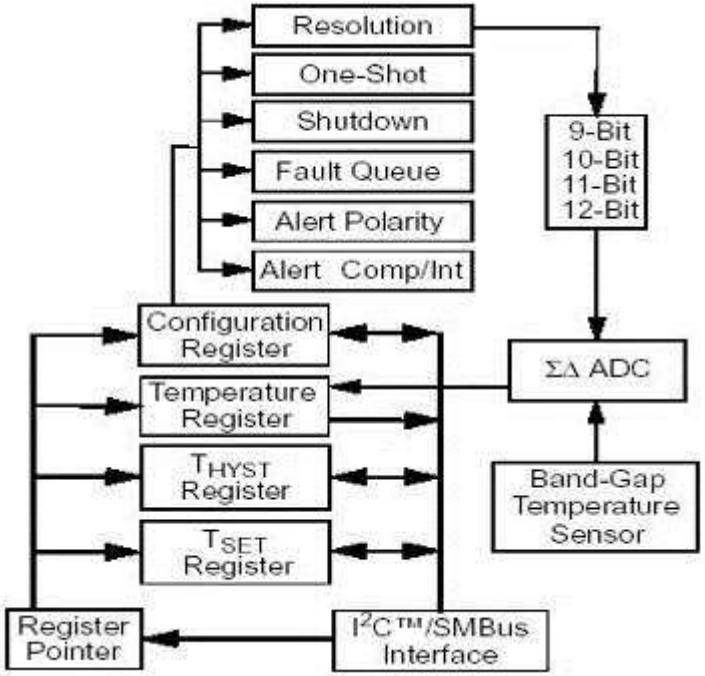

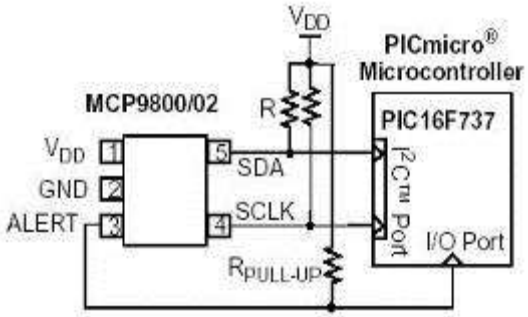

<< BACK

MCP9804

Online Datasheet

Features:

- Accuracy:
  - ±0.25°C (typical) from -40°C to +125°C
  - ±1°C (maximum) from -40°C to +125°C
- User Selectable Measurement Resolution:
  0.5°C, 0.25°C, 0.125°C, 0.0625°C
- User Programmable Temperature Limits:
  - Temperature Window Limit
  - Critical Temperature Limit
- User Programmable Temperature Alert Outpu
- Operating Voltage Range: 2.7V to 5.5V
- Operating Current: 200 µA (typical)
- Shutdown Current: 0.1 µA (typical)
- 2-wire Interface: I^2C/SMBus Compatible
- Available Packages: 2x3 DFN-8, MSOP-8

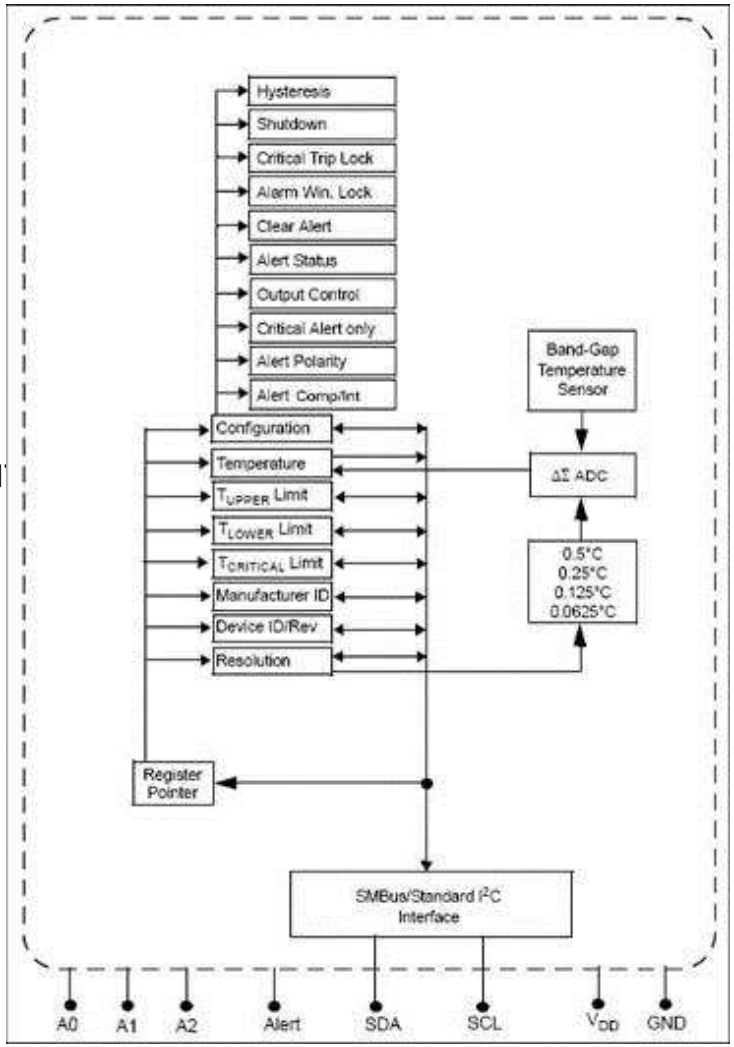

<< BACK

MCP9808

Online Datasheet

Features:

- Accuracy:
- ±0.25 (typical) from -40°C to +125°C
- ±0.5°C (maximum) from -20°C to 100°C
- ±1°C (maximum) from -40°C to +125°C
- User-Selectable Measurement Resolution:
- +0.5°C, +0.25°C, +0.125°C, +0.0625°C
- User-Programmable Temperature Limits:
- Temperature Window Limit
- Critical Temperature Limit
- User-Programmable Temperature Alert Output
- Operating Voltage Range: 2.7V to 5.5V
- Operating Current: 200 µA (typical)
- Shutdown Current: 0.1 µA (typical)
- 2-wire Interface: I2C™/SMBus Compatible
- Available Packages: 2x3 DFN-8, MSOP-8

Temperature Accuracy

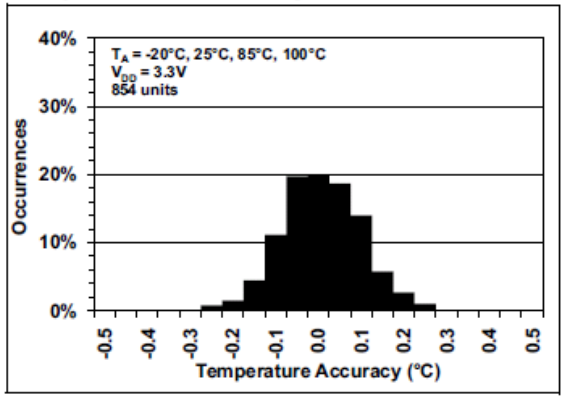

Package Types

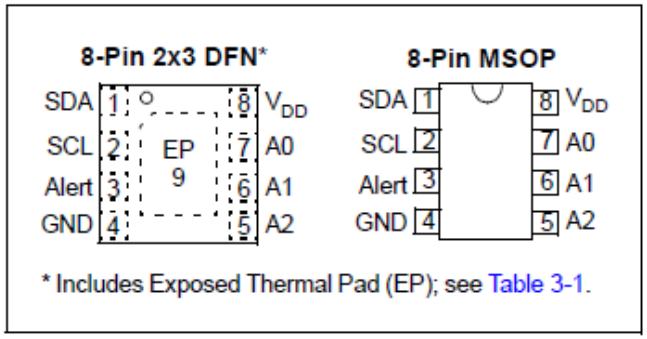

<< BACK

MCP98243

Online Datasheet

Features:

Temperature Sensor
- JC42.4-TSE2002B3
- Temperature Sensor with 2 Kbit Serial EEPROM for Serial Presence Detect (SPD)

• I²C/SMBus Interface
• Packages: DFN-8, TDFN-8, UDFN-8, TSSOP-8

Temperature Sensor Features

• Sensor Accuracy (Grade B):
- ±0.2°C/±1°C (typ./max.) → +75°C to +95°C
- ±0.5°C/±2°C (typ./max.) → +40°C to +125°C
- ±1°C/±3°C (typ./max.) → -20°C to +125°C

• Operating Current: 200 µA (typical)
• V_{DD}: 2.7V to 5.5V

Serial EEPROM Features

• V_{DD}: 1.8V to 5.5V
• Operating Current:
- Write : 1.1 mA (typical) for 3.5 ms (typical)
- Read : 100 µA (typical)

• Permanent and Reversible Software Write Protect

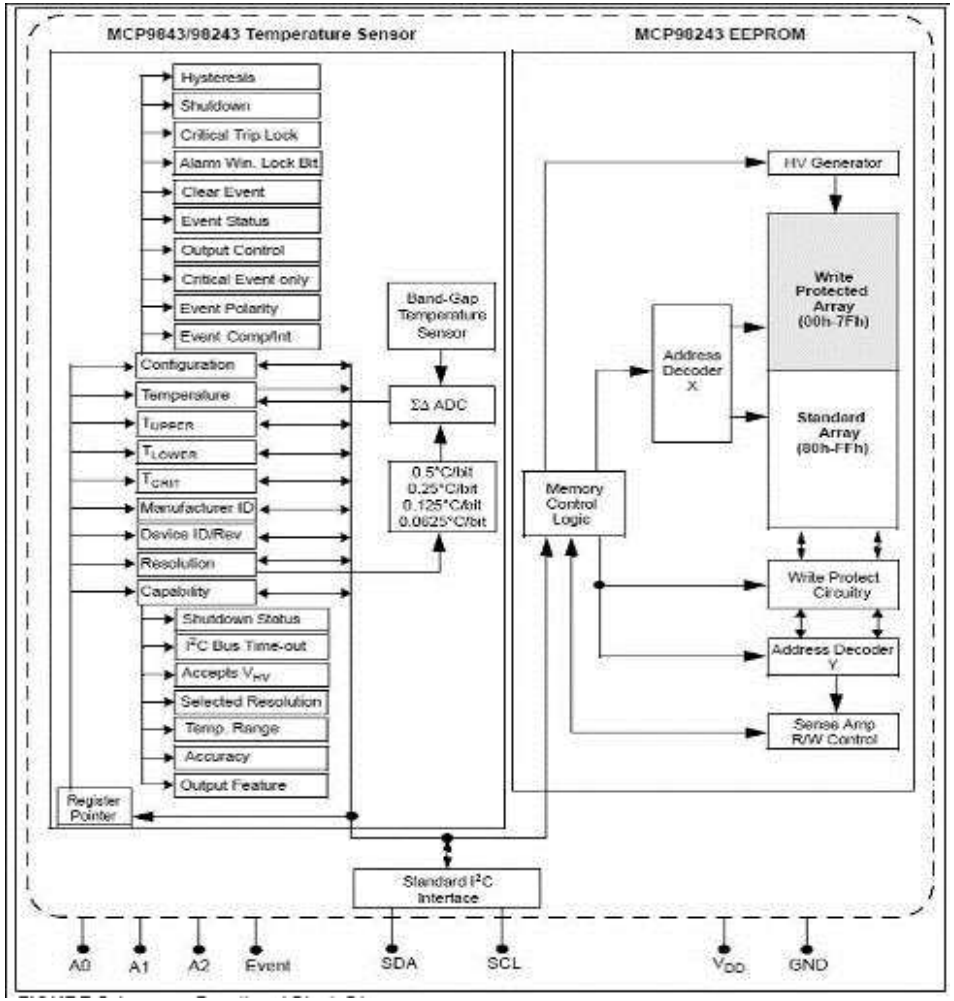

<< BACK

MCP98244

Online Datasheet

Features:

- Meets JEDEC Specification:
  - JC42.4-TSE2004B1 Temperature Sensor with 4 Kbit Serial EEPROM for Serial Presence Detect (SPD)
- 1MHz, 2-wire I2C Interface
- V_{DD}: 1.7V to 3.6V
- Operating Current: 100 µA (typ., EEPROM Idle)
- Package: TDFN-8

Temperature Sensor Features

- Sensor Accuracy (Grade B):
  - ±0.2°C/±1°C (typ./max.) between +75°C to +95°C
  - ±0.5°C/±2°C (typ./max.) between +40°C to +125°C
  - ±1°C/±3°C (typ./max.) between -40°C to +125°C

Serial EEPROM Features

- Operating Current:
  - Write: 250 µA (typical) for 3 ms (typical)
  - Read :100 µA (typical)
- Reversible Software Write Protect
- Software Write Protection for each 1 Kbit Block
- Organized as two banks of 256 x 8-bit (2 Kbit x 2)

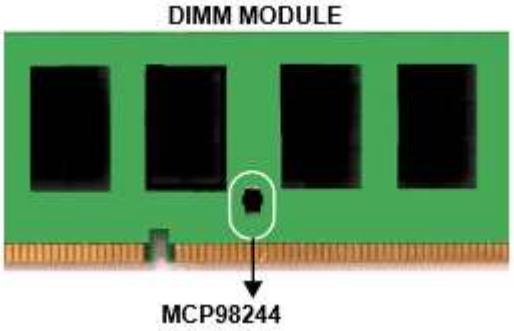

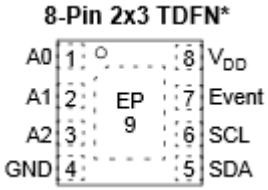

<< BACK

AT30TSE002B

Online Datasheet

Features:

Temperature Sensor with 2Kb Serial EEPROM
- JC42.4-TSE2002B3
- EEPROM for Serial Presence Detect (SPD)

• I²C/SMBus Interface
• Package: UDFN-8

Temperature Sensor Features

• Sensor Accuracy (Grade B):
- ±1°C (max.) → +75°C to +95°C
- ±2°C (max.) → +40°C to +125°C
- ±3°C (max.) → -20°C to +125°C

• Operating Current: 200 µA (typical)
• V_{DD}: 2.7V to 3.6V

Serial EEPROM Features

• Operating Current:
- Write : 1.5 mA (typical)
- Read : 200 µA (typical)

• Permanent and Reversible Software Write Protect
• Endurance: 1 Million Write Cycles

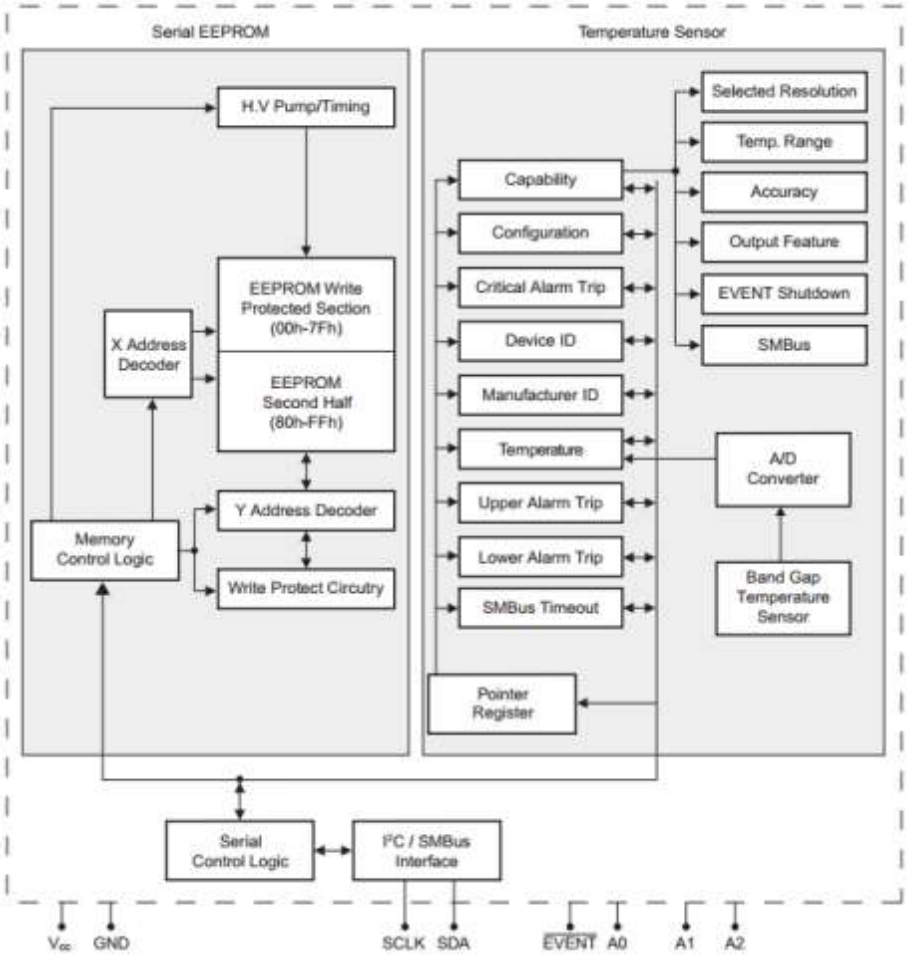

<< BACK

AT30TSE004A

Online Datasheet

Features:

- Meets JEDEC Specification:
  - JC42.4-TSE2004B1 Temperature Sensor with 4 Kbit Serial EEPROM for Serial Presence Detect (SPD)
- 1MHz, 2-wire I^2C Interface
- V_{DD}: 1.7V to 3.6V
- Operating Current: 200 µA (typ., EEPROM Idle)
- Package: TDFN-8, UDFN-8

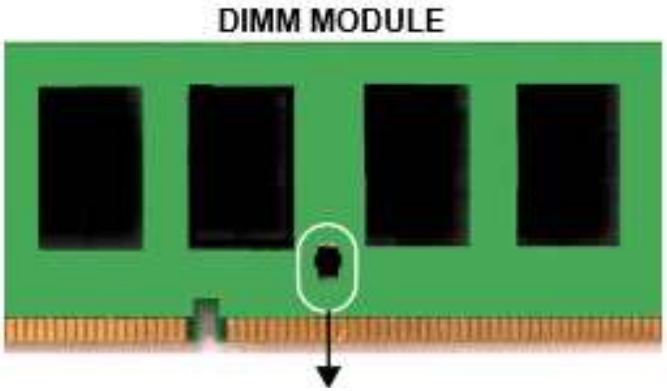

AT30TSE004A

Temperature Sensor

- Sensor Accuracy (Grade B):
  - ±1°C (max.) between +75°C to +95°C
  - ±2°C (max.) between +40°C to +125°C
  - ±3°C (max.) between -20°C to +125°C

Serial EEPROM

- Operating Current:
  - Write: 1.5mA (typical)
  - Read :200 µA (typical)
- Reversible Software Write Protect
- Software Write Protection for each 1 Kbit Block

<< BACK

AT30TSE752/4/8A

Online Datasheet

Features:

- Temperature-to-Digital Converter
- High Accuracy with 12-bit Resolution
  ±1°C (max.) accuracy from 0°C to +85°C
  ±2°C (max.) accuracy from -25°C to +105°C
  ±3°C (max.) accuracy from -40°C to +125°C
- Nonvolatile Registers to Retain User-Configured or Power-up Defaults
- 2/4/8Kb of Serial EEPROM
- User-selectable Resolution: 9 - 12 bit
- 1.7V to 5.5V Operating Voltage Range
- 2-wire Interface: I²C™, SMBus Compatible
- Low Power
  75µA (typ.) Operating Current
  1µA (typ.) Shutdown Mode
- Power-saving One-shot Temperature Measurement
- Pin and Software Compatible to Industry standard LM75-type Devices
- Packages: SOIC-8, MSOP-8, 2x3 UDFN-8

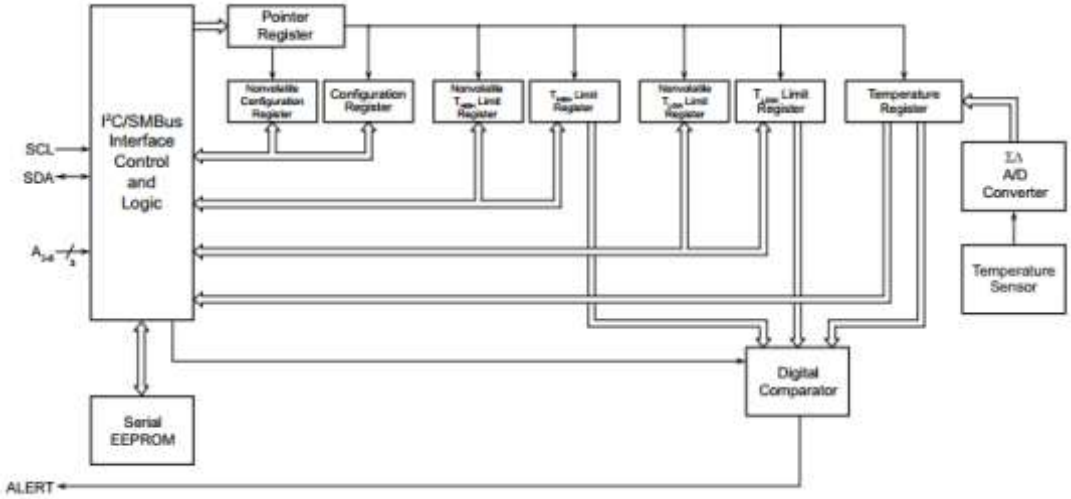

<< BACK

MCP9844

Online Datasheet

Features:

- User Selectable Measurement Resolution:
  - +0.5°C, +0.25°C, +0.125°C, +0.0625°C
- User Programmable Temperature Limits:
  - Temperature Window Limit
  - Critical Temperature Limit
- User Programmable Temperature Alert Output
- I2C Interface
- V_{DD}: 1.7V to 3.6V
- Operating Current: 100 µA (typ.)
- Package: 8-lead TDFN

Temperature Sensor Features

- Sensor Accuracy (Grade B):
  - ±0.2°C/±1°C (typ./max.) between +75°C to +95°C
  - ±0.5°C/±2°C (typ./max.) between +40°C to +125°C
  - ±1°C/±3°C (typ./max.) between -40°C to +125°C

8-Pin 2x3 TDFN *

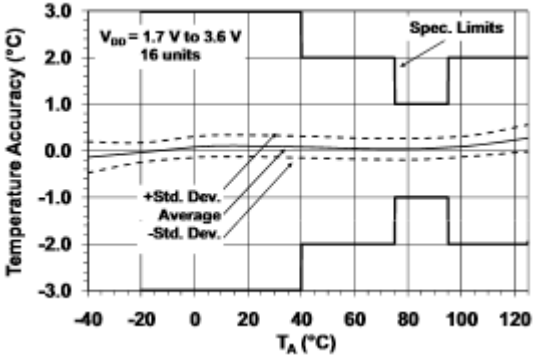

<< BACK

MCP9501/2/3/4

Online Datasheet

Features:

- Factory Set Temperature Switch
- Wide Operating Voltage Range: 2.7V to 5.5V
- Low Supply Current: 25 µA (typ.)
- Temperature Switch Accuracy:
  - ±1°C (typical)
  - ±4°C (maximum) -15°C to +75°C
  - ±6°C (maximum) -40°C to +125°C
- Switch Threshold Options (Hot/Cold):
  - Rising Temp.: MCP9501/2 (Hot Option)
  - Falling Temp.: MCP9503/4 (Cold Option)
- Output Configuration Options:
  - Active Low, Open-Drain Output: MCP9501/3
  - Uses External Pull-up Resistor
  - Active-High, Push-Pull Output: MCP9502/4
- User Selectable Hysteresis: 2°C or 10°C (typical)
- 5-lead SOT-23 package

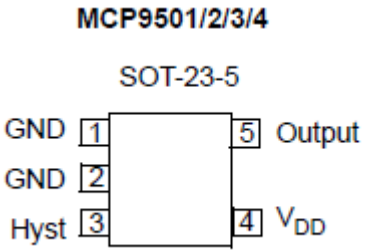

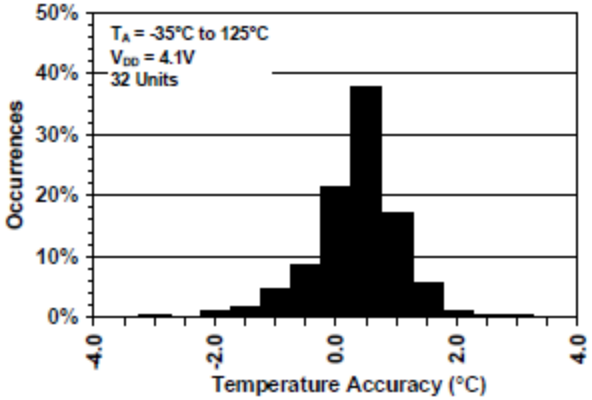

<< BACK

MCP9509/10

Online Datasheet

Features:

- Resistor-Programmable Temperature Switch
- Wide Operating Voltage Range: 2.7V to 5.5V
- Low Supply Current: 30µA (typ.)
- Temperature Switch Accuracy:
  ±0.5°C (typ.) at +25°C, +45°C
  ±1°C (typ.) 0°C to +70°C
  ±3.5°C (max.) 0°C to +125°C
  ±4.5°C (max.) -20°C to +125°C
  ±2°C (typ.) -40°C to +125°C
- Sensor Options available:
  Switch for rising temperature: Cold to Hot (H)
  Switch for falling temperature: Hot to Cold (C)
- Output Configurations:
  Open-Drain:
  - External Pull-up Resistor: MCP9509
  - Internal Pull-up Resistor: MCP9510
  Active-Low, Push-Pull: MCP9510
  Active-High, Push-Pull: MCP9510
- User Selectable Hysteresis: 2°C or 10°C (typ.)
- Space-Saving SOT-23-5, SOT-23-6 Packages

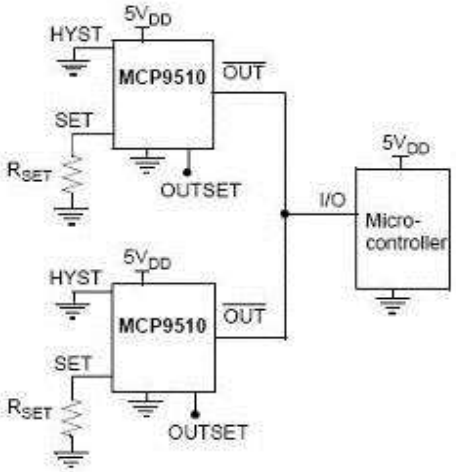

MCP9510 Wired-Or Output Configuration with Internal Pull-up Resistor.

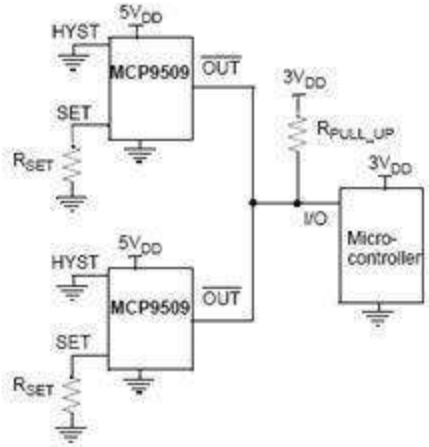

MCP9509 Wired-Or Output Configuration with Level-shift.

<< BACK

MCP9600

Online Datasheet

Features:

- Thermocouple Voltage to °C Converter
  - Integrated Cold-Junction Compensation
- Supported Types (NIST ITS-90):
  Type K, J, T, N, S, E, B and R
- ±1.5°C (Max.) Measurement Accuracy
  - ±1.0°C (Max.) Cold-Junc., 0°C to +85°C
- Temperature Measurement Resolution:
  Hot and Cold-Junctions: 0.0625°C (typical)
- Four Programmable Temperature Alert Outputs
  - Monitor Hot or Cold-Junction Temperatures
  - Detect rising or falling temperatures
  - Up to 255°C of Programmable Hysteresis
- Programmable Digital Filter for Temperature
- Low Power: Shutdown Mode and Burst Mode
- I2C Compatible
  - 100 kHz, supports 8 devices/bus
- Operating Voltage Range: 2.7V to 5.5V
- Operating Current: 500 µA (typical)
- Package: 20-lead MQFN

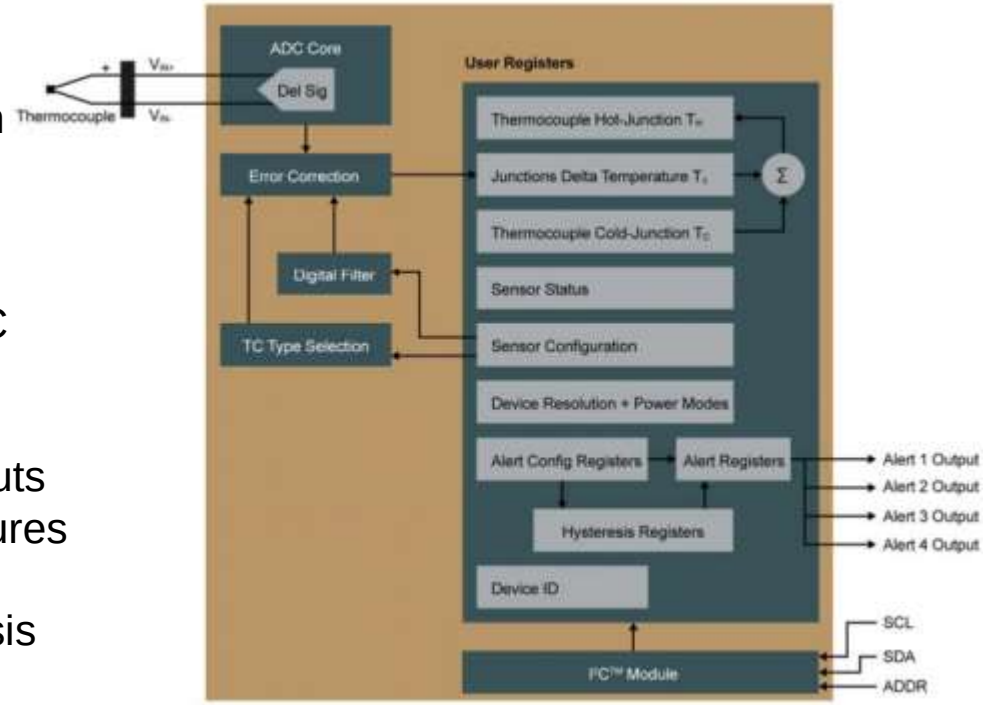

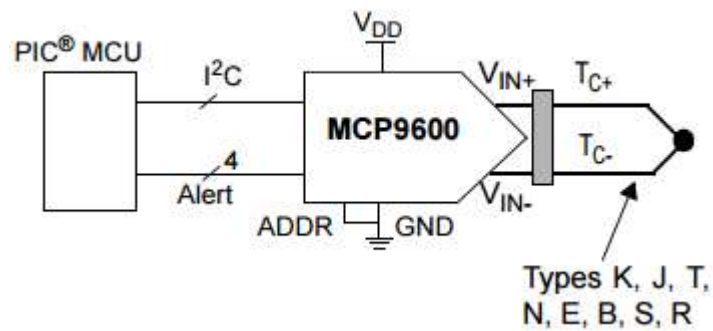

<< BACK

TC642

Online Datasheet

Features:

- Temperature Proportional Fan Speed for Acoustic Control and Longer Fan Life
- Efficient PWM Fan Drive
- 3.0V to 5.5V Supply Range:
  - Fan Voltage Independent of TC647 Supply Voltage
  - Supports any Fan Voltage
- FanSense™ Fault Detection Circuits Protect Against Fan Failure and Aid System Testing
- Shutdown Mode for “Green” Systems
- Supports Low Cost NTC/PTC Thermistors
- Over-temperature Indication
- Space Saving 8-Pin MSOP Package

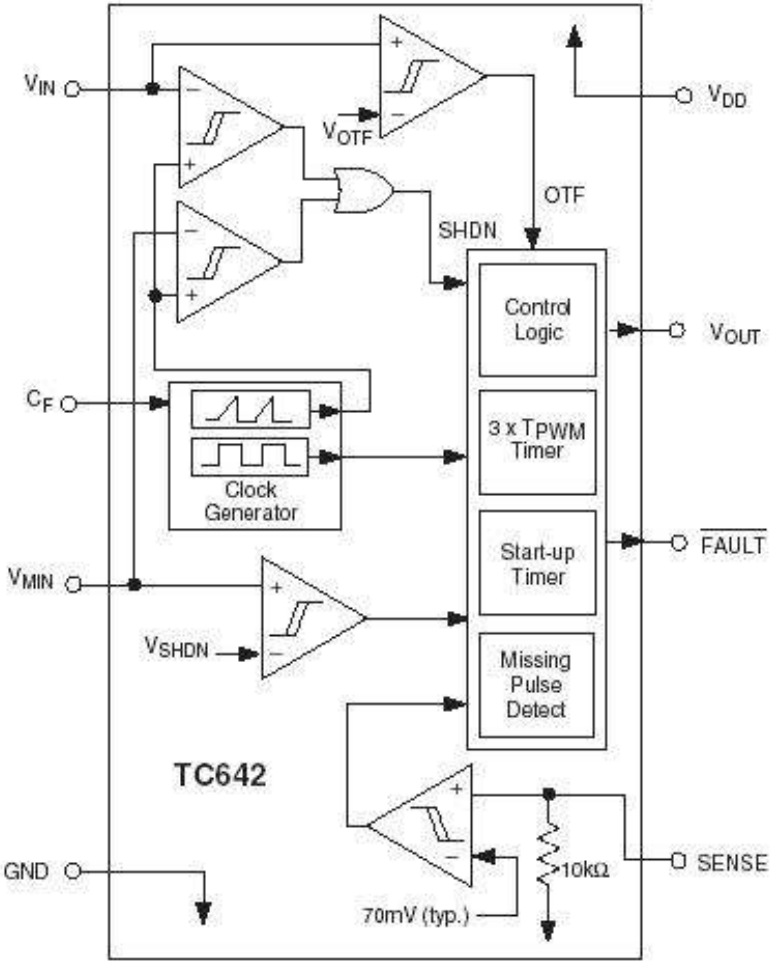

TC646 >>

TC648 >>

TC647 >>

TC649 >>

<< BACK

TC646

Online Datasheet

Features:

- Temperature Proportional Fan Speed for Acoustic Control and Longer Fan Life
- Efficient PWM Fan Drive
- 3.0V to 5.5V Supply Range:
  - Fan Voltage Independent of TC646 Supply Voltage
  - Supports any Fan Voltage
- FanSense™ Fault Detection Circuits Protect Against Fan Failure and Aid System Testing
- Shutdown Mode for “Green” Systems
- Supports Low Cost NTC/PTC Thermistors
- Over-temperature Indication

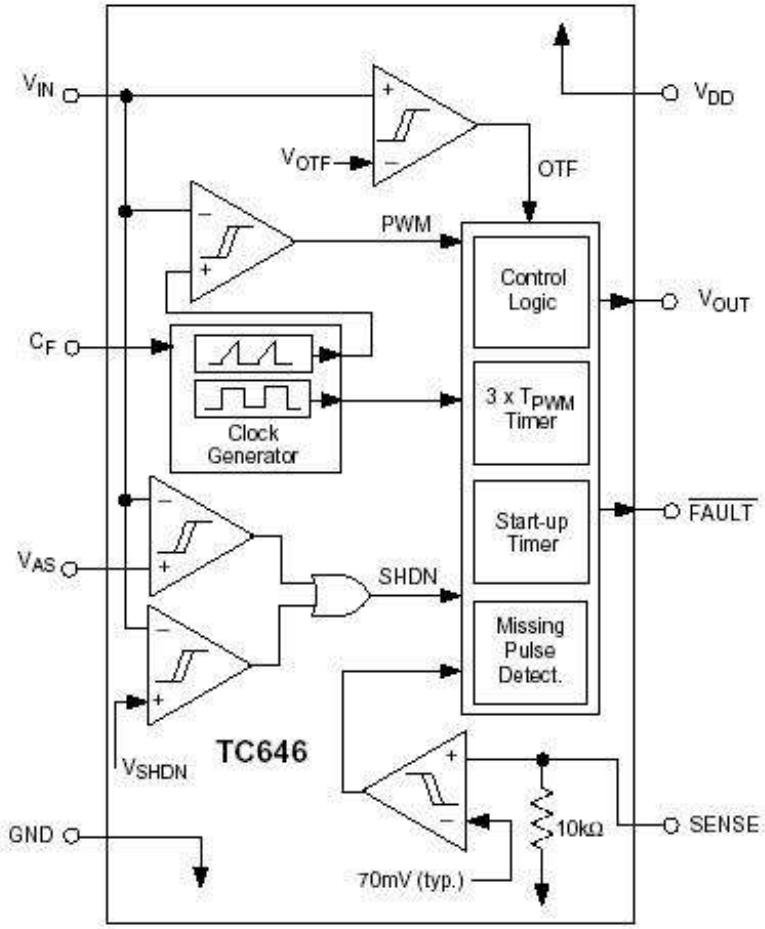

TC642 >>

TC648 >>

TC647 >>

TC649 >>

<< BACK

TC647

Online Datasheet

Features:

- Temperature Proportional Fan Speed for Acoustic Control and Longer Fan Life
- Efficient PWM Fan Drive
- 3.0V to 5.5V Supply Range:
  - Fan Voltage Independent of TC647 Supply Voltage
  - Supports any Fan Voltage
- FanSense™ Fault Detection Circuits Protect Against Fan Failure and Aid System Testing
- Shutdown Mode for “Green” Systems
- Supports Low Cost NTC/PTC Thermistors
- Over-temperature Indication
- Space Saving 8-Pin MSOP Package

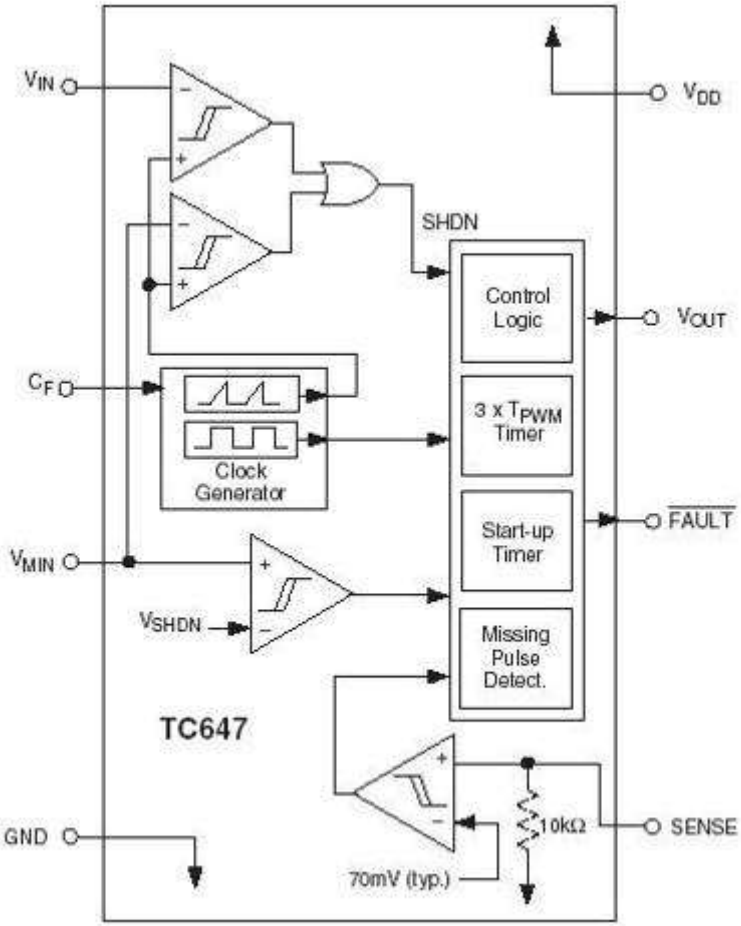

TC642 >>
TC648 >>
TC646 >>
TC649 >>
<< BACK

TC648

Online Datasheet

Features:

- Temperature Proportional Fan Speed for Acoustic Control and Longer Fan Life
- Efficient PWM Fan Drive
- 3.0V to 5.5V Supply Range:
  - Fan Voltage Independent of TC647 Supply Voltage
  - Supports any Fan Voltage
- Over-temperature Fan Detection
- Shutdown Mode for “Green” Systems
- Supports Low Cost NTC/PTC Thermistors
- Space Saving 8-Pin MSOP Package

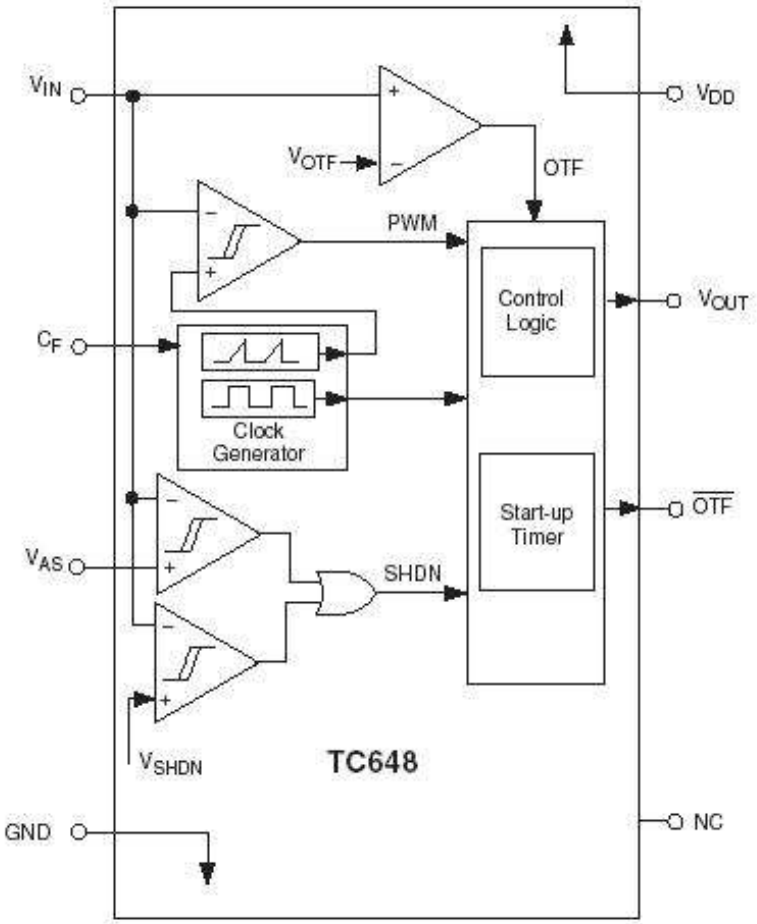

TC642 >>
TC647 >>
TC646 >>
TC649 >>
<< BACK

TC649

Online Datasheet

Features:

- Temperature Proportional Fan Speed for Acoustic Control and Longer Fan Life
- Efficient PWM Fan Drive
- 3.0V to 5.5V Supply Range:
  - Fan Voltage Independent of TC649 Supply Voltage
  - Supports any Fan Voltage
- FanSense™ Fault Detection Circuits Protect Against Fan Failure and Aid System Testing
- Shutdown Mode for “Green” Systems
- Supports Low Cost NTC/PTC Thermistors
- Over-temperature Indication
- Space Saving 8-Pin MSOP Package

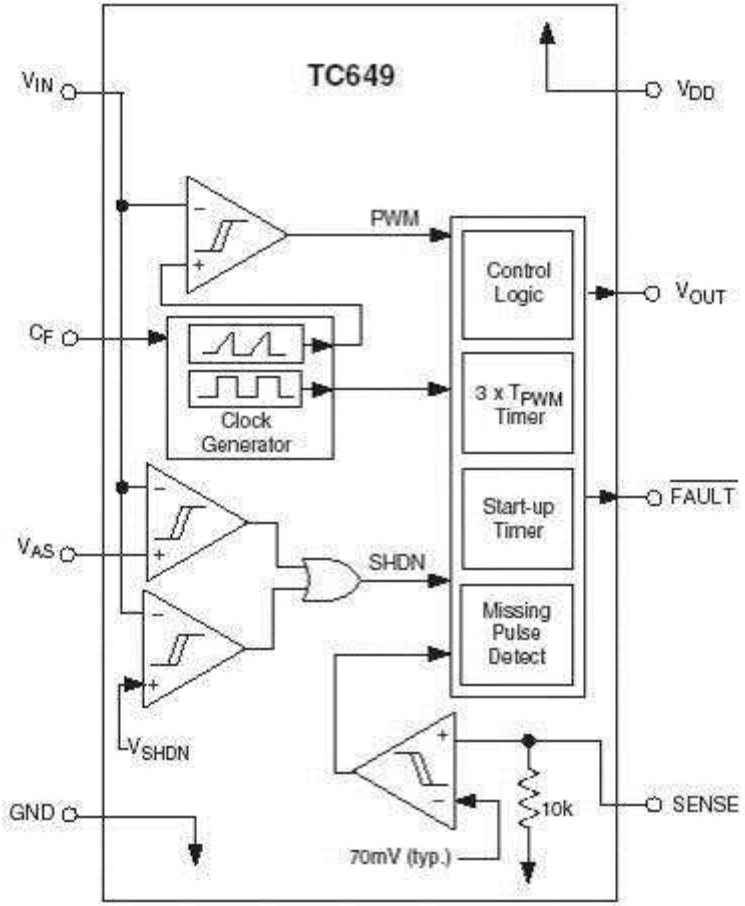

TC642 >>
TC647 >>
TC646 >>
TC648 >>
<< BACK

TC642B/647B

Online Datasheet

Features:

- Temperature Proportional Fan Speed for Acoustic Control and Longer Fan Life
- Efficient PWM Fan Drive
- 3.0V to 5.5V Supply Range:
  - Fan Voltage Independent of TC642B/TC647B Supply Voltage
  - Supports any Fan Voltage
- FanSense™ Fault Detection Circuits Protect Against Fan Failure and Aid System Testing
- Shutdown Mode for “Green” Systems
- Supports Low Cost NTC/PTC Thermistors
- Over-temperature Indication
- Fan Auto-Restart
- Space Saving 8-Pin MSOP Package

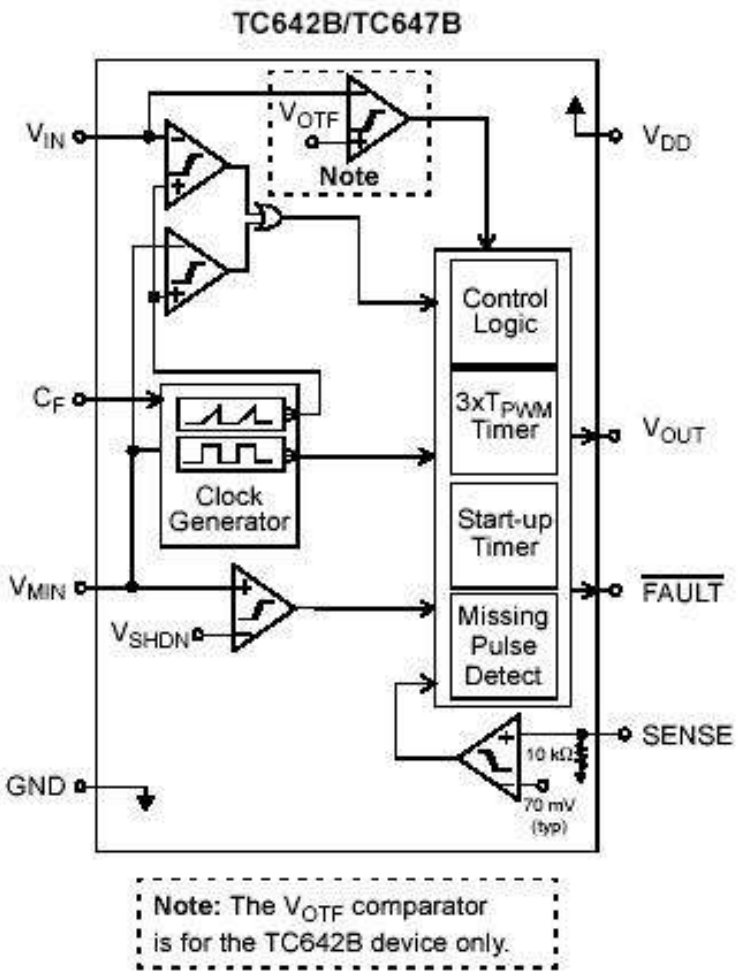

TC646/8/9B >>

<< BACK

TC646B/648B/649B

Online Datasheet

Features:

- Temperature Proportional Fan Speed for Acoustic Control and Longer Fan Life
- Efficient PWM Fan Drive
- 3.0V to 5.5V Supply Range:
  - Fan Voltage Independent of TC646B/TC648B/TC649B Supply Voltage
  - Supports any Fan Voltage
- FanSense™ Fault Detection Circuits Protect Against Fan Failure and Aid System Testing (TC646B/TC649B)
- Shutdown Mode for "Green" Systems
- Supports Low Cost NTC/PTC Thermistors
- Over-temperature Indication (TC646B/TC648B)
- Fan Auto-Restart
- Space Saving 8-Pin MSOP Package

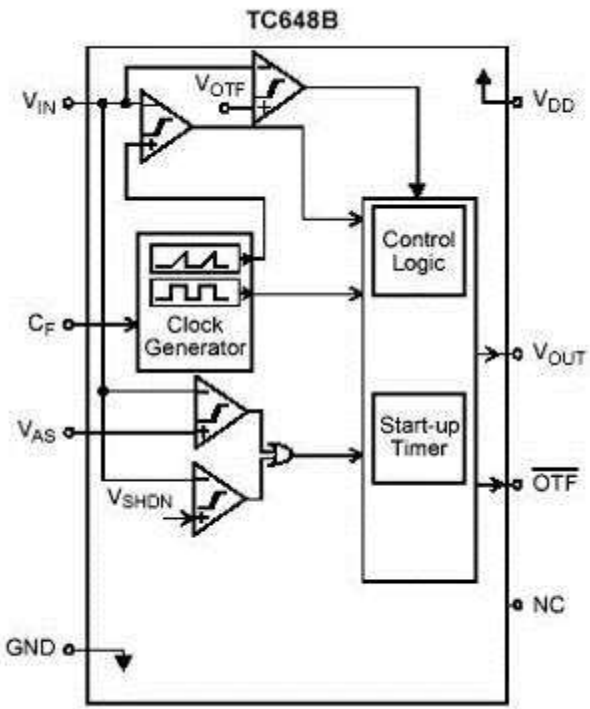

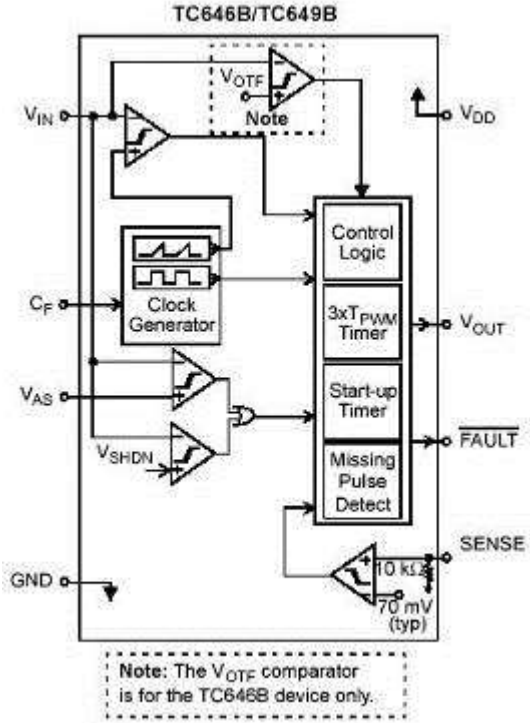

TC642/7B >>

<< BACK

TC650/1

Online Datasheet

Features:

- Integrated Temperature Sensing and Multi-Speed Fan Control
- Built-in Over Temperature Alert
- Temperature Proportional Fan Speed Control for Acoustic Noise Reduction and Longer Fan Life
- Pulse Width Modulation Output Drive for Cost and Power Savings
- Solid-State Temperature Sensing
- ±1°C (typ.) accuracy +25°C to +70°C
- 2.8V to 5.5V Operating Range
- TC651 includes Auto Fan Shutdown
- Low Operating Current 50µA (typ.)

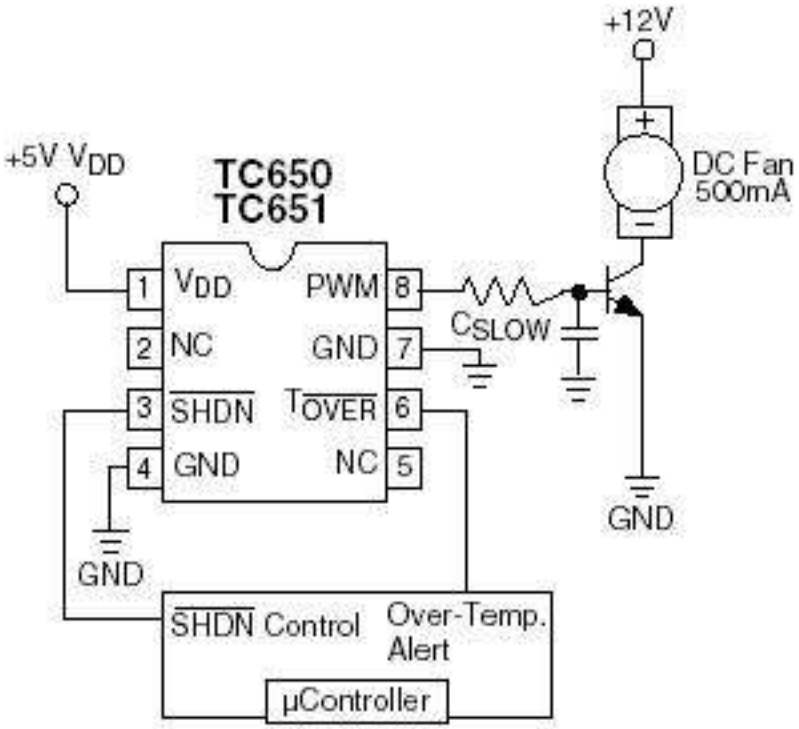

TC652/3 >>

<< BACK

TC652/3

Online Datasheet

Features:

- Integrated Temperature Sensing and Multi-Speed Fan Control
- FanSense™ Fan Fault Detect Circuitry
- Built-in Over Temperature Alert
- Temperature Proportional Fan Speed Control for Acoustic Noise Reduction and Longer Fan Life
- Pulse Width Modulation Output Drive for Cost and Power Savings
- Solid-State Temperature Sensing
- ±1°C (typ.) Accuracy +25°C to +70°C
- 2.8V to 5.5V Operating Range
- TC653 includes Auto Fan Shutdown
- Low Operating Current 50µA (typ.)

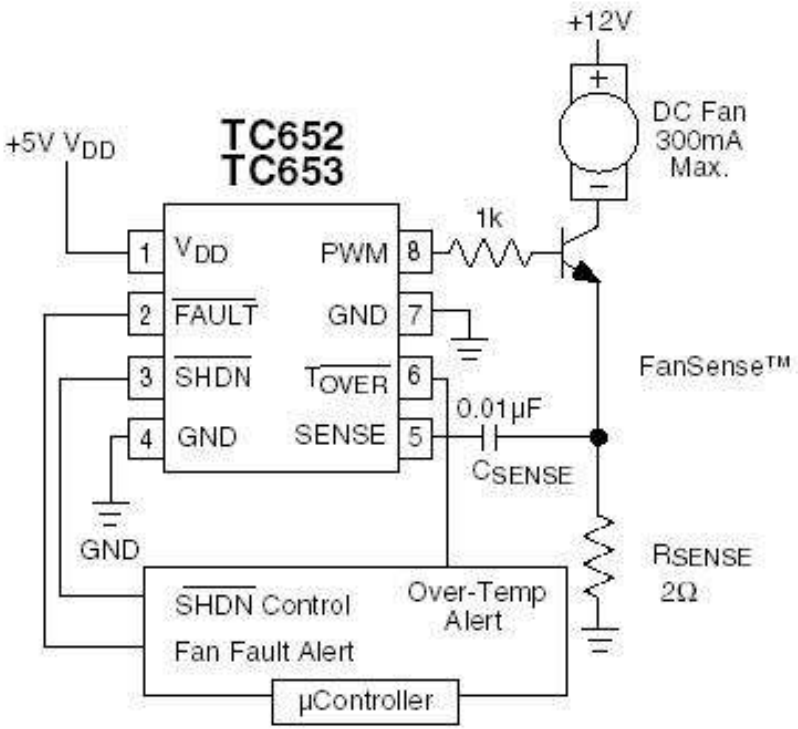

TC650/1 >>

<< BACK

TC654/5

Online Datasheet

Features:

- FanSense™ Protects against Fan Failure and Eliminates the Need for 3-wire Fans
- Temperature Proportional Fan Speed Control for Acoustic Noise Reduction and Longer Fan Life
- Over Temperature Detection (TC655)
- Provides RPM Data
- 2-Wire SMBus™ Compatible Interface
- Software Controlled Shutdown Mode for "Green" Systems
- Supports Low Cost NTC/PTC Thermistors
- Space Saving 10-pin MSOP Package
- Temperature Range: -40°C to +85°C

TC654/TC655

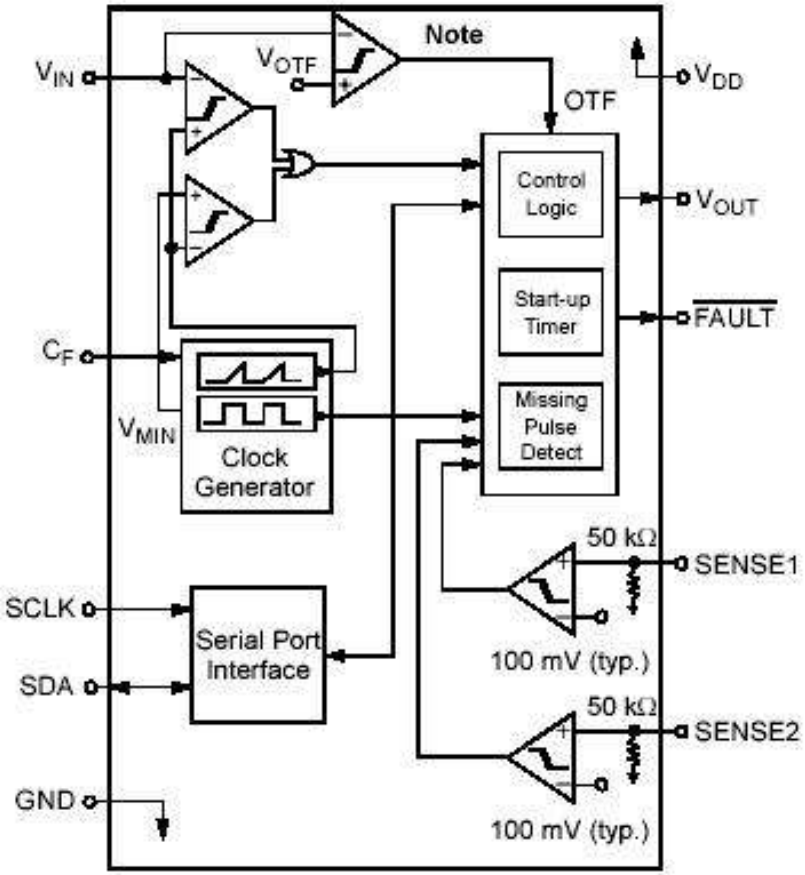

Note: OTF condition applies for the TC655 device only.

TC664/5 >>

<< BACK

TC664/5

Online Datasheet

Features:

- FanSense™ Protects against Fan Failure and Eliminates the Need for 3-wire Fans
- Temperature Proportional Fan Speed Control for Acoustic Noise Reduction and Longer Fan Life
- Over Temperature Detection (TC665)
- Provides RPM Data
- 2-Wire SMBus™ Compatible Interface
- Supports any Fan Voltage
- Software Controlled Shutdown Mode for "Green" Systems
- Supports Low Cost NTC/PTC Thermistors
- Space Saving 10-pin MSOP Package
- Temperature Range: -40°C to +85°C

TC664/TC665

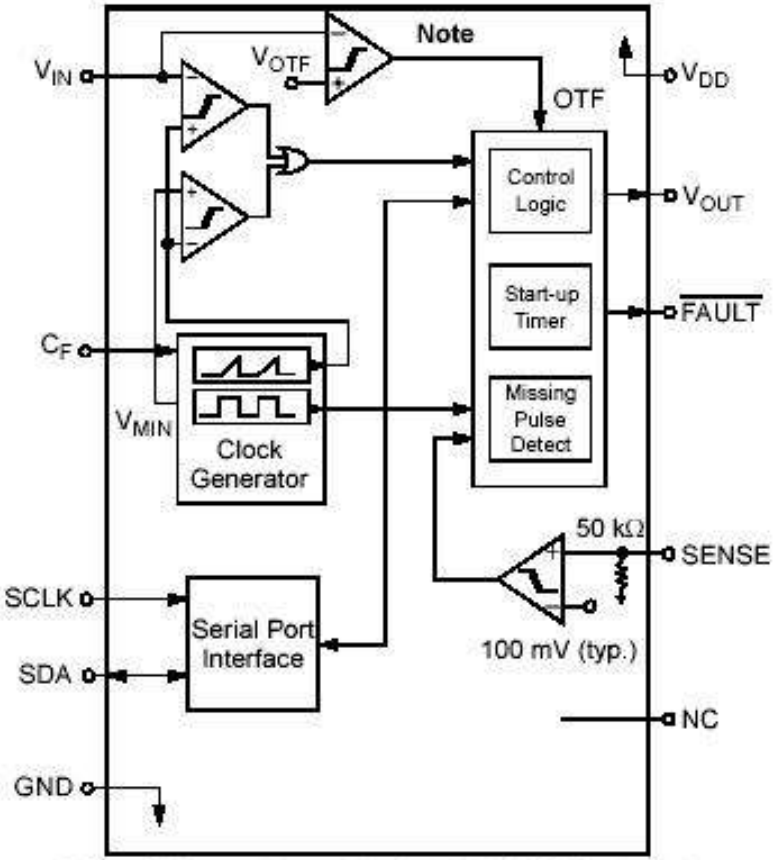

Note: OTF condition applies for the TC665 device only.

TC654/5 >>

<< BACK

TC670

Online Datasheet

Features:

- Fan Wear-Out Detection for 2-Wire Linear-Controlled Fans
- Replacement System for 3-Wire Fans
- Fan Alert Signal when Fan Speed is below Programmed Threshold
- CLEAR Capability for Eliminating False Alarm
- Low Operating Current, 90µA (typ.)
- V_{DD} Range 3.0V to 5.5V
- Available in a 6-Pin SOT-23 Package

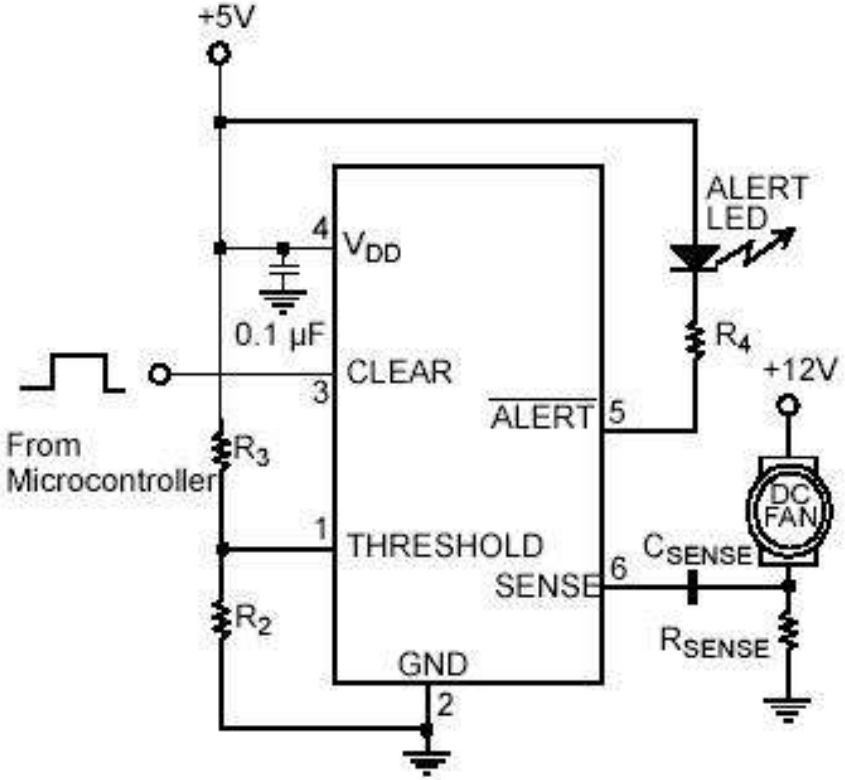

<< BACK

MCP601/2/3/4

Online Datasheet

Features:

- Gain Bandwidth Product: 2.8MHz (typ.)
- Low Quiescent Current: 230µA/amplifier (typ.)
- Input Offset Voltage (max): ±2 mV
- Single-Supply: 2.7V to 6V
- Rail-to-Rail Output
- Input Range Includes Ground
- Unity-Gain Stable
- Chip Select (CS): **MCP603 only**
- Temperature Ranges:
  - Industrial: -40°C to +85°C
  - Extended: -40°C to +125°C
- Available in Single, Dual and Quad

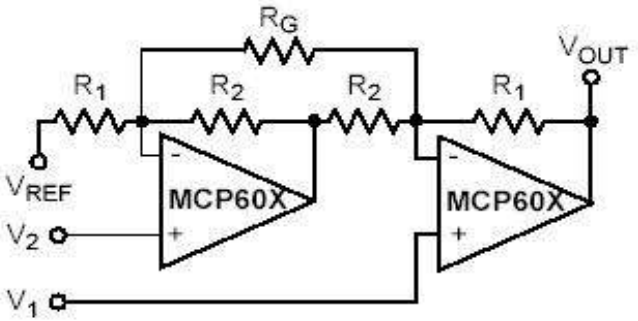

$$V_{OUT} = (V_1 - V_2)\left(1 + \frac{R_1}{R_2} + \frac{2R_1}{R_G}\right) + V_{REF}$$

Two-Op Amp Instrumentation Amplifier

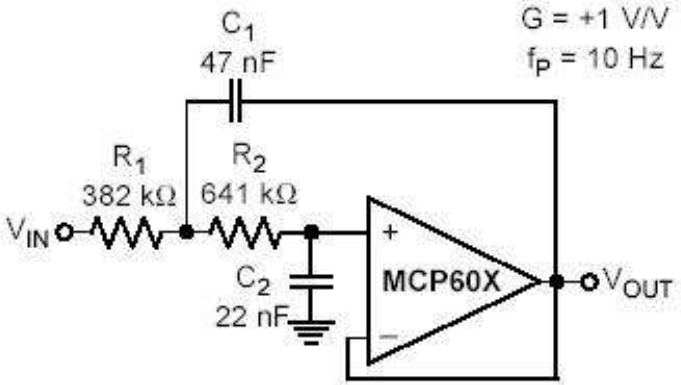

Second-Order, Low-Pass Sallen-Key Filter

<< BACK

MCP606/7/8/9

Online Datasheet

Features:

- Gain Bandwidth Product: 155 kHz
- Low Quiescent Current: 25µA (max.)
- Low Input Offset Voltage: ±250µV (max.)
- Power Supply Voltage: 2.5V to 6V
- Low Input Bias Current: 80pA (max.) at 85°C
- Unity Gain Stable
- Rail to Rail Output
- Chip Select Capability: **MCP608**
- Industrial Temperature Range:
  -40°C to +85°C
- Available in Single, Dual and Quad Packages
- Available in PDIP, SOIC, MSOP, TSSOP

$$\frac{I_{LOAD} R_{SENSE}}{1 + \frac{R_F}{R_{IN}}}$$

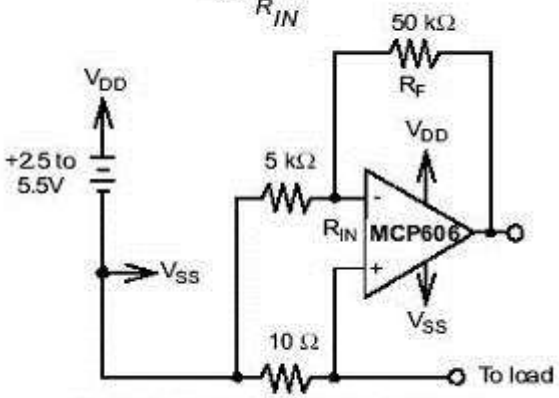

Low Side Battery Current Sensing

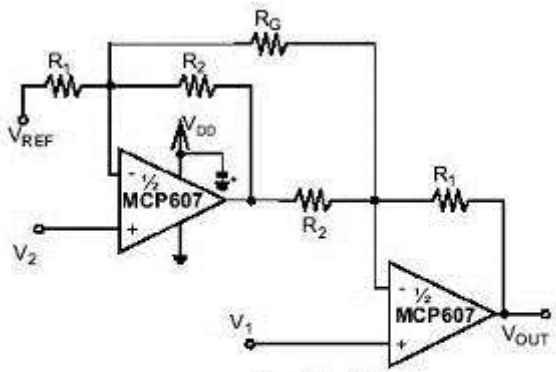

$$V_{OUT} = (V_1 - V_2)\left(1 + \frac{R_1}{R_2} + \frac{2R_1}{R_G}\right) + V_{REF}$$

*Bypass Capacitor, 0.1mF

Two Op Amp Instrumentation Amplifier

<< BACK

MCP616/7/8/9

Online Datasheet

Features:

- Gain Bandwidth Product: 190 kHz
- Low Quiescent Current: 25µA (max.)
- Low Input Offset Voltage: ±150µV (max.)
- Power Supply Voltage: 2.3V to 5.5V
- Low Noise: 2.2µV_{P-P} (typ.), 0.1Hz to 10Hz
- Low Input Offset Current: 0.3nA (typ.)
- Rail to Rail Output
- Unity Gain Stable
- Chip Select Capability: **MCP618**
- Industrial Temperature Range:
  -40°C to +85°C
- Available in Single, Dual and Quad
- Available in PDIP, SOIC, MSOP, TSSOP

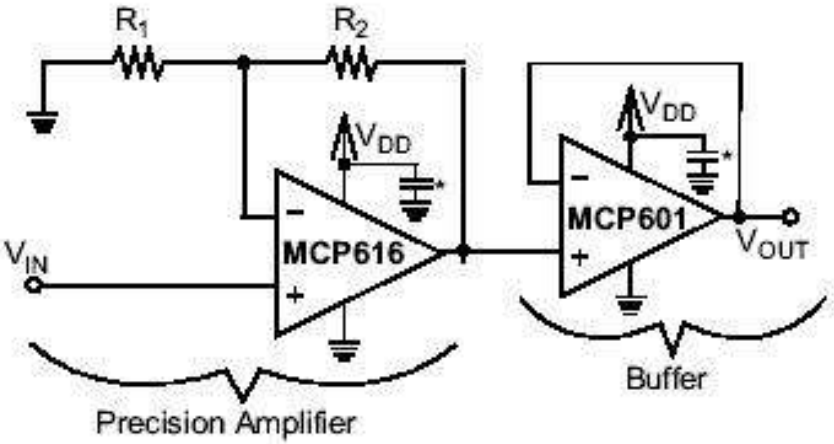

*Bypass Capacitor, 1 µF

Precision Gain with Good Load Isolation

HISTOGRAM OF INPUT OFFSET VOLTAGE

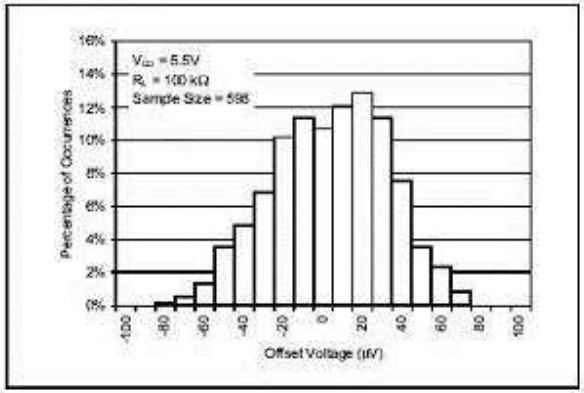

<< BACK

MCP6001/2/4

Online Datasheet

Features:

- Gain Bandwidth Product: 1MHz (typ.)
- Supply Current: 100µA (typ.)
- Input Offset Voltage (max): ±4.5 mV
- Supply Voltage: 1.8V to 6V
- Rail to Rail Input/Output
- Phase Margin: 90° (typ.)
- Temperature Ranges:
  Industrial: -40°C to +85°C
  Extended: -40°C to +125°C
- Available in Single, Dual and Quad
- Packages
  Single: SOT23, SC70
  Dual: MSOP, 2x3 DFN
  Quad: SOIC, TSSOP

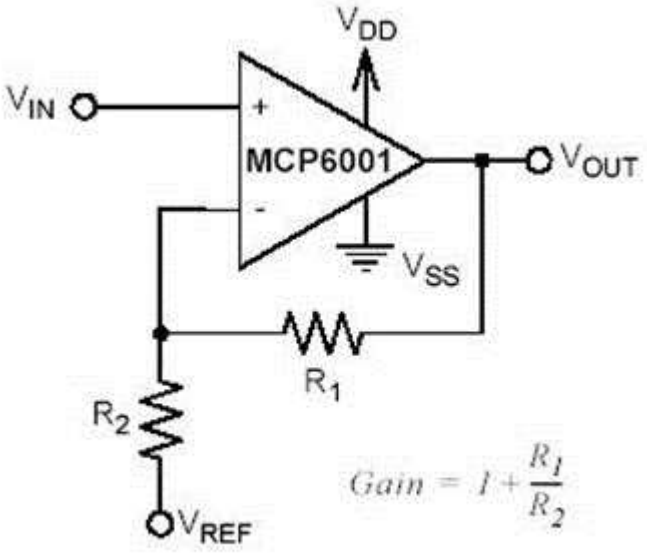

Non-Inverting Amplifier

<< BACK

MCP6401/2/4

Online Datasheet

Features:

- Gain Bandwidth Product: 1MHz (typ.)
- Supply Current: 45µA (typ.)
- Input Offset Voltage (max): ±4.5 mV
- Supply Voltage: 1.8V to 6V
- Phase Margin: 65° (typ.)
- Rail to Rail Input/Output
- Temperature Ranges:
  Extended: -40°C to +125°C
- Available in Single, Dual and Quad
- Packages:
  Singles: SC70, SOT23
  Dual: SOIC, 2x3 TDFN
  Quad: TSSOP, SOIC

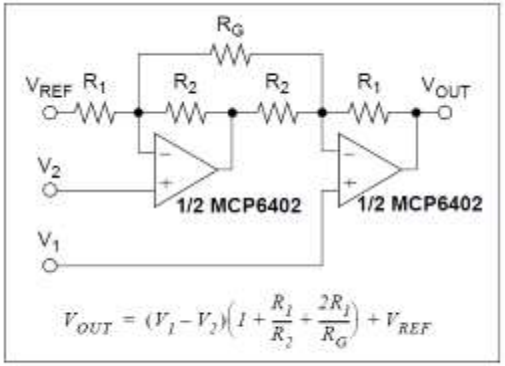

FIGURE 4-10: *Two Op Amp Instrumentation Amplifier.*

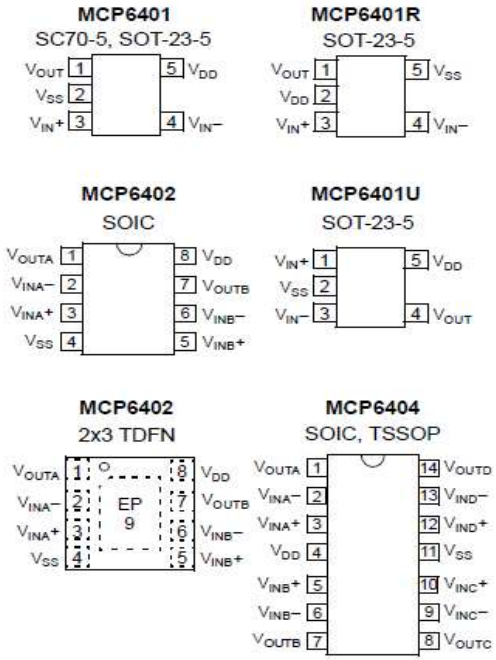

<< BACK

MCP6Lxx

Product	# per Package	GBWP (kHz)	Iq Max (uA)	Vos Max (uV)	Operating Voltage Range (V)	Rail-To-Rail	Packages	Online Datasheet
MCP6L01/2/4	1/2/4	1000	170	5000	1.8 - 6.0	In/Out	Singles: SC70, SOT23 Duals: MSOP, SOIC Quads: TSSOP, SOIC	MCP6L01/2/4 Datasheet
MCP6L71/2/4	1/2/4	2000	240	4000	2.0 - 6.0	In/Out		MCP6L71/2/4 Datasheet
MCP6L1/2/4	1/2/4	2800	330	3000	2.7 - 6.0	Out		MCP6L1/2/4 Datasheet
MCP6L91/2/4	1/2/4	10000	1350	4000	2.4 - 6.0	In/Out		MCP6L91/2/4 Datasheet

<< BACK

MCP660/1/2/3/4/5/9

Online Datasheet

Features:

- Gain Bandwidth Product: 60 MHz (typical)
- Single/Dual/Triple/Quad
- Supply Current: 6.0 mA (typical)
- Input Offset Voltage (max): ±8 mV
- Supply Voltage: 2.5V to 5.5V
- Short Circuit Current: 90 mA (typical)
- Noise: 6.8 nV/√Hz (typical, at 1 MHz)
- Rail-to-Rail Output
- Slew Rate: 32 V/µs (typical)
- Available in Single, Dual and Quad
- Chip Select: MCP663, MCP665, MCP669
- Extended Temperature Range:
  -40°C to +125°C

Typical Application Circuit

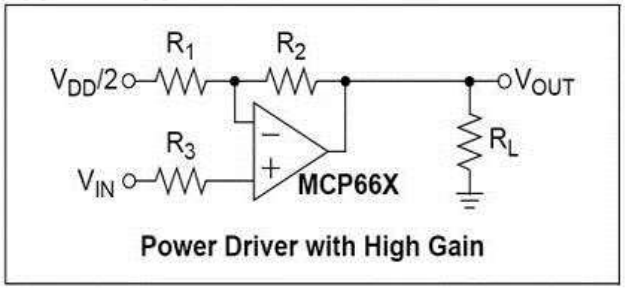

Package Types

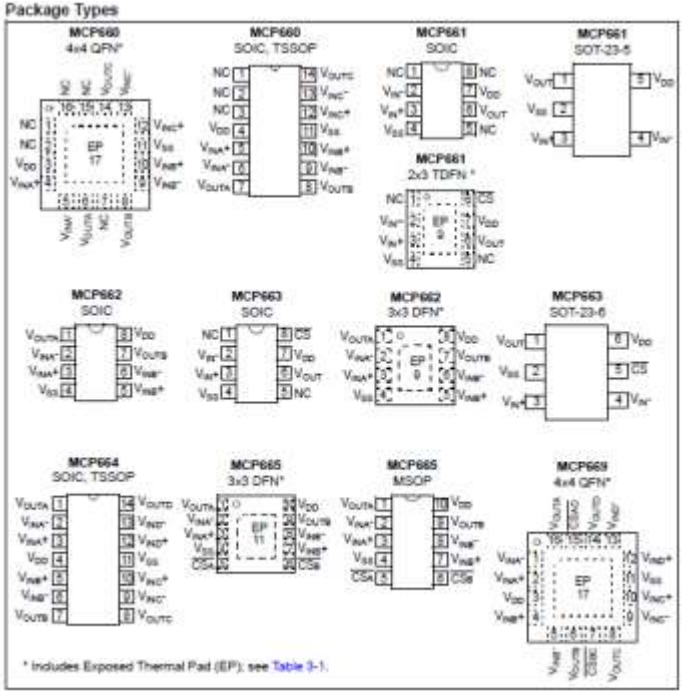

<< BACK

MCP631/2/3/4/5/9

Online Datasheet

Features:

- Gain Bandwidth Product: 24 MHz (typical)
- Supply Current: 2.5 mA (typical)
- Input offset voltage (max): ± 8 mV
- Power Supply: 2.5V to 5.5V
- Short Circuit Current: 70 mA (typical)
- Noise: 10 nV/√Hz (typical, at 1 MHz)
- Rail-to-Rail Output
- Slew Rate: 10 V/µs (typical)
- Available in Single, Dual and Quad
- Chip Select: MCP633, MCP635, MCP639
- Extended Temperature Range: -40°C to +125°C

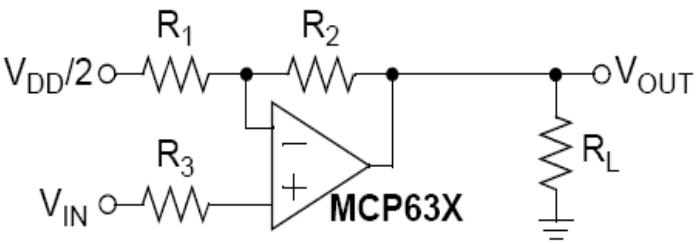

Power Driver with High Gain

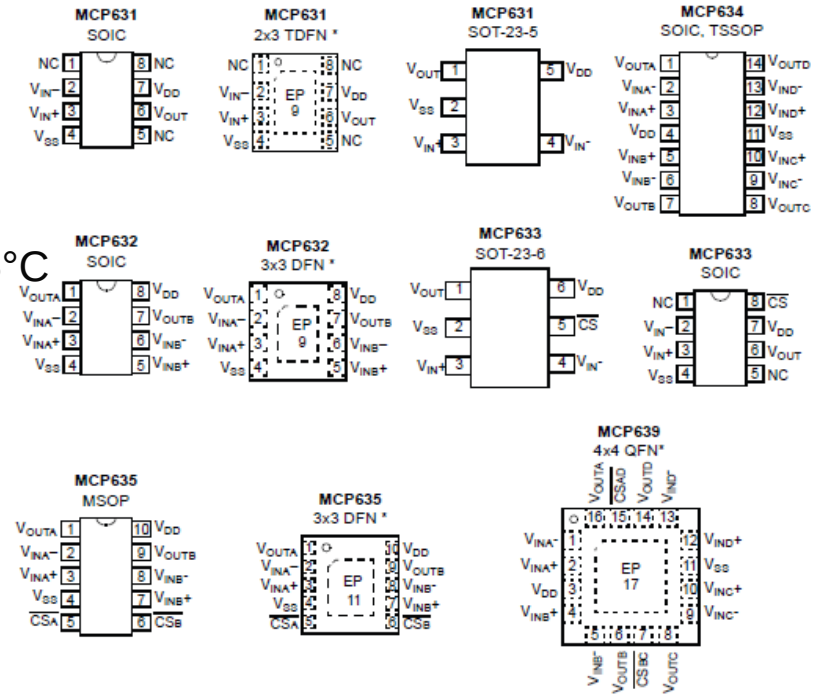

<< BACK

MCP6021/2/3/4

Online Datasheet

Features:

- Gain Bandwidth Product : 10MHz (typ.)
- Low Supply Current: 1mA (typ.)
- Low Offset Voltage:
  - Industrial Temperature: ±500µV (max.)
  - Extended Temperature: ±250µV (max.)
- Power Supply Range: 2.5V to 5.5V
- Low Noise: 8.7nV/√Hz, at 10kHz (typ.)
- Rail-to-Rail Input/Output
- Mid-Supply V_{REF}: MCP6021 and MCP6023
- Unity Gain Stable
- Temperature Range:-40°C to +125°C

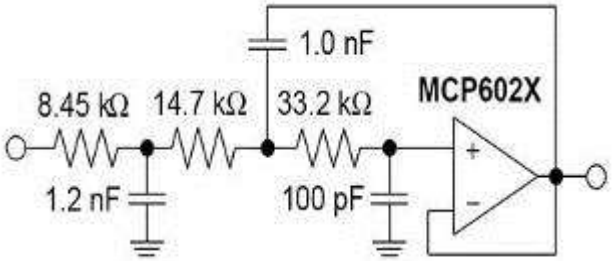

A/D converter driver and anti-aliasing filter with a 20 kHz cutoff frequency

MCP6021
SOT-23-5

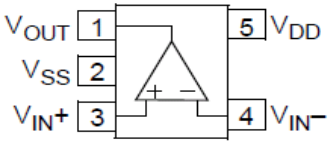

MCP6021R
SOT-23-5

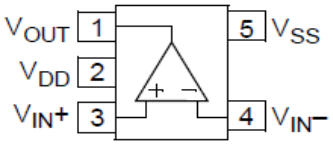

MCP6021
PDIP SOIC,
MSOP, TSSOP

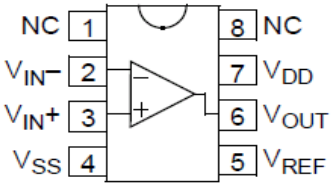

MCP6022
PDIP SOIC, TSSOP

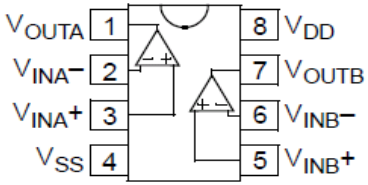

MCP6023
PDIP SOIC, TSSOP

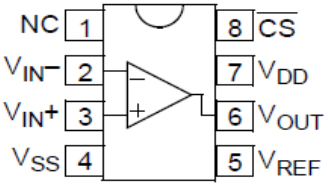

MCP6024
PDIP SOIC, TSSOP

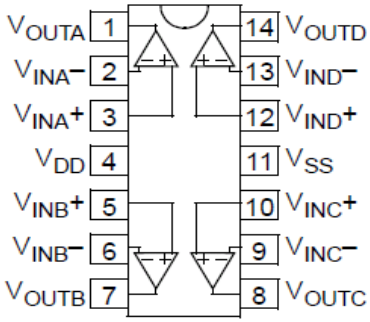

<< BACK

MCP651/1S/2/3/5/9

Online Datasheet

Features:

- Gain Bandwidth: 50MHz (typ.)
- Low Supply Current: 6mA (typ.)
- Calibrated Offset Voltage: ±200µV (max.)
- Power Supply Range: 2.5V to 5.5V
- Short Circuit Current: 100mA (typ.)
- Low Noise: 7.5nV/√Hz, at 1MHz (typ.)
- Slew Rate: 30V/µs (typ.)
- Rail-to-Rail Output
- Calibrate/Chip Select Pin Options
- Temperature Range:
  Extended: -40°C to +125°C

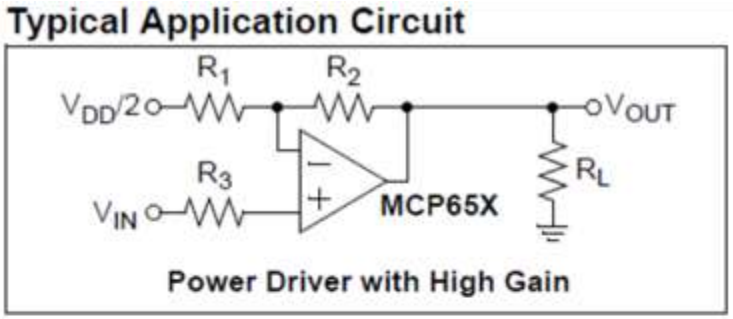

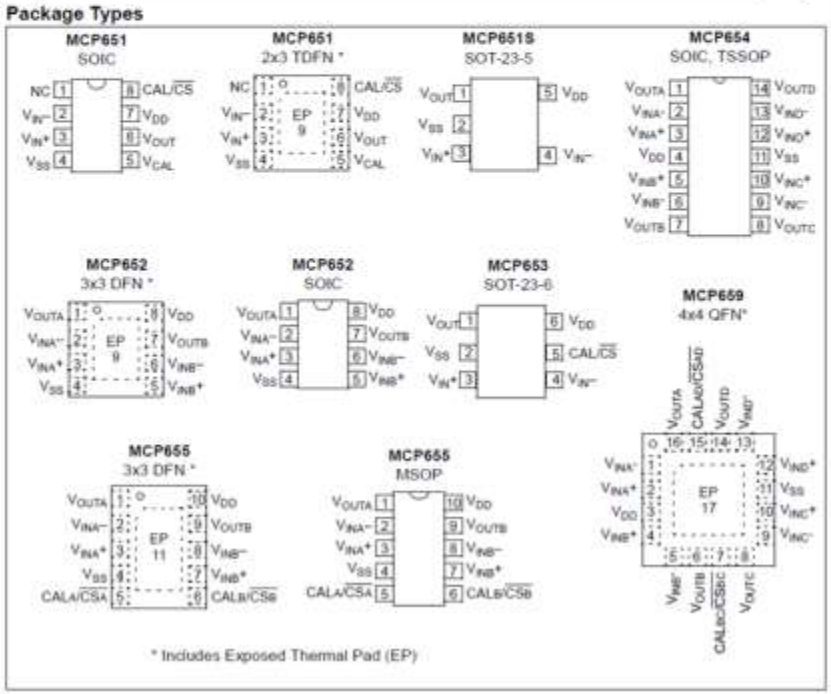

<< BACK

MCP621/1S/2/3/4/5/9

Online Datasheet

Features:

- Gain Bandwidth Product: 20MHz (typ.)
- Single/Dual/Quad

Supply Current: 2.5mA (typ.)

- Calibrated Input Offset: ±200µV (max.)
- Power Supply: 2.5V to 5.5V
- Short Circuit Current: 70mA (typ.)
- Noise: 13nV/√Hz (typ., at 1MHz)
- Rail-to-Rail Output
- Slew Rate: 10V/µs (typ.)

Calibrate/Chip Select Pin Options

- Extended Temperature Range: -40°C to +125°C

Typical Application Circuit

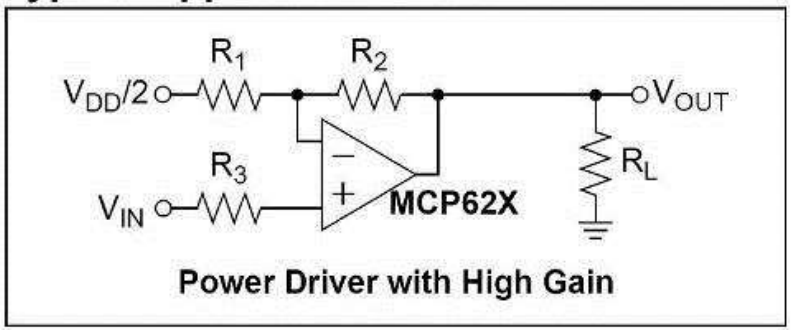

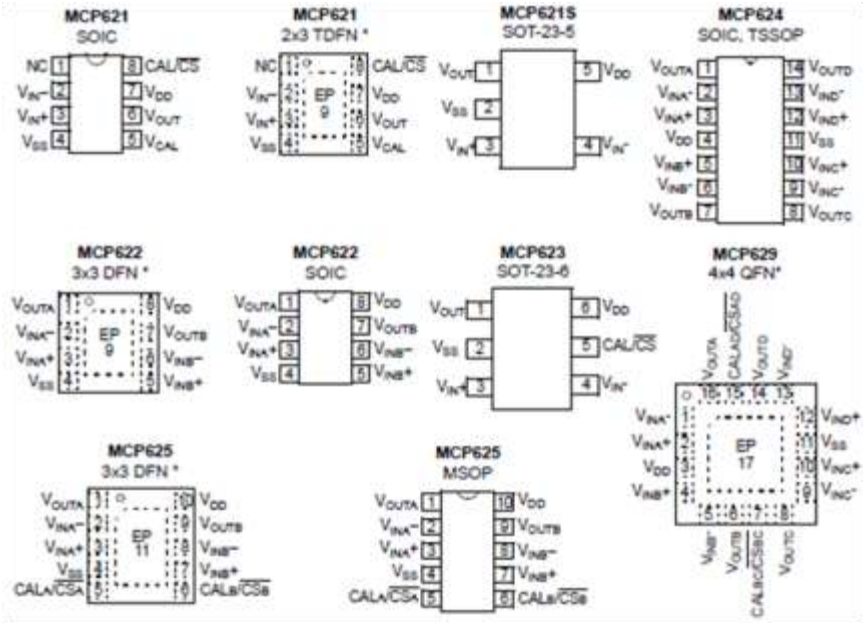

<< BACK

MCP6441/2/4

Online Datasheet

Features:

- Gain Bandwidth Product: 9kHz (typ.)
- Low Supply Current: 450nA/Amplifier (typ.)
- Input Offset Voltage (max): ±4.5 mV
- Supply Voltage Range: 1.4V to 6V (max.)
- Rail-to-Rail Input/ Output
- Unity Gain Stable
- Available in Single, Dual and Quad
- Packages:
  Singles: SC70, SOT23
  Dual: SOIC, MSOP
  Quad: TSSOP, SOIC

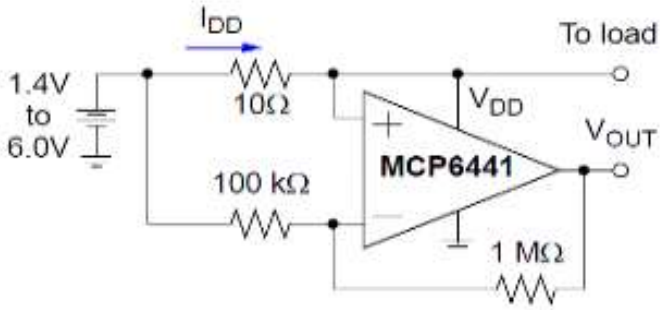

$$I_{DD} = \frac{V_{DD} - V_{OUT}}{(10\ V/V) \cdot (10\Omega)}$$

Battery Current Sensing

MCP6441

SC70-5, SOT-23-5

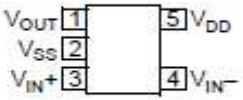

MCP6442

SOIC, MSOP

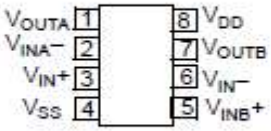

MCP6444

SOIC, TSSOP

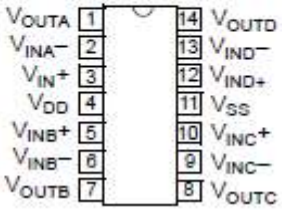

<< BACK

MCP6041/2/3/4

Online Datasheet

Features:

- Gain Bandwidth Product: 14kHz (typ.)
- Low Supply Current: 600nA/Amplifier (typ.)
- Input Offset Voltage (max): ± 3 mV
- Supply Voltage Range: 1.4V to 6V (max.)
- Rail-to-Rail Input/ Output
- Unity Gain Stable
- Available in Single, Dual and Quad
- Chip Select (CS) with MCP6043

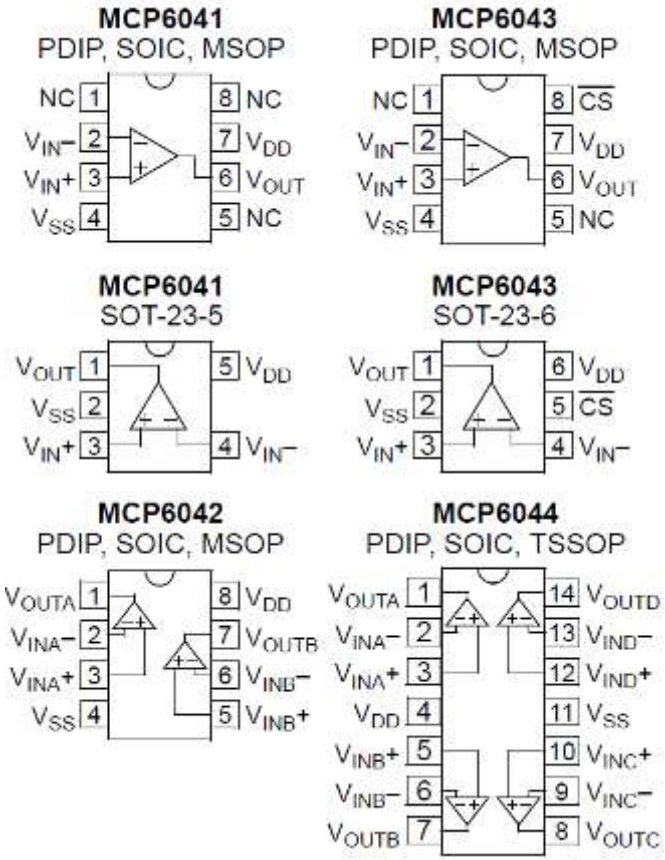

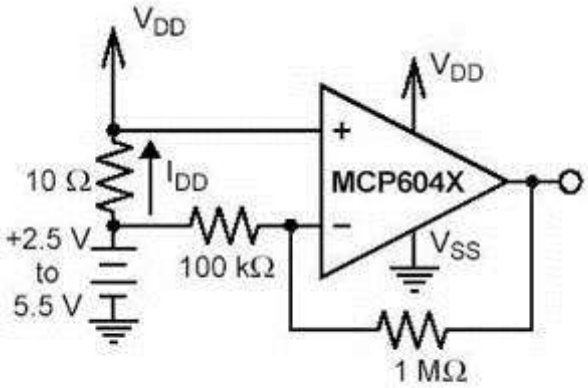

High Side Battery Current Sensor

<< BACK

MCP6031/2/3/4

Online Datasheet

Features:

- Gain Bandwidth Product: 10 kHz (typ.)
- Ultra Low Quiescent Current: 0.9µA (typ.)
- Low Offset Voltage: ±150µV (max.)
- Wide Power Supply Voltage: 1.8V to 5.5V
- Rail-to-Rail Input and Output
- Unity Gain Stable
- Chip Select (CS) capability: MCP6033
- Extended Temperature Range:
  -40°C to +125°C

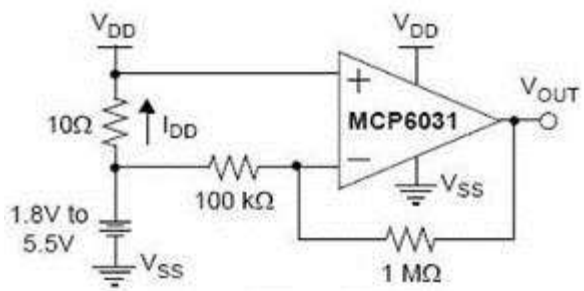

$$I_{DD} = \frac{V_{DD} - V_{OUT}}{(10\ V/V) \bullet (10\Omega)}$$

High Side Battery Current Sensor

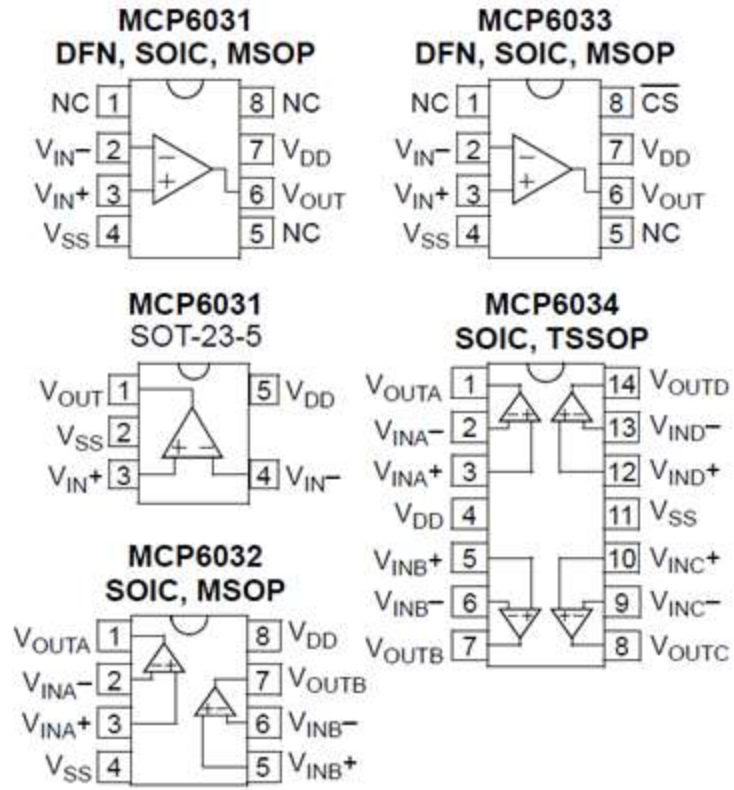

<< BACK

MCP6051/2/4

Online Datasheet

Features:

- Gain Bandwidth Product: 385kHz (typ.)
- Ultra Low Quiescent Current: 30µA (typ.)
- Low Offset Voltage: ±150µV (max.)
- Wide Power Supply Voltage: 1.8V to 6.0V
- Rail-to-Rail Input and Output
- Unity Gain Stable
- Extended Temperature Range:
  -40°C to +125°C

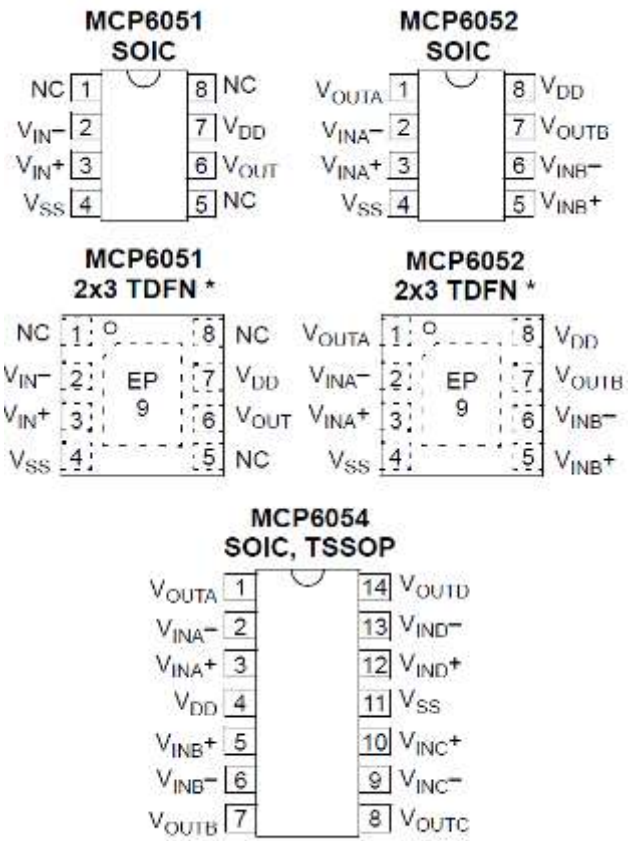

* Includes Exposed Thermal Pad (EP); see Table 3-1.

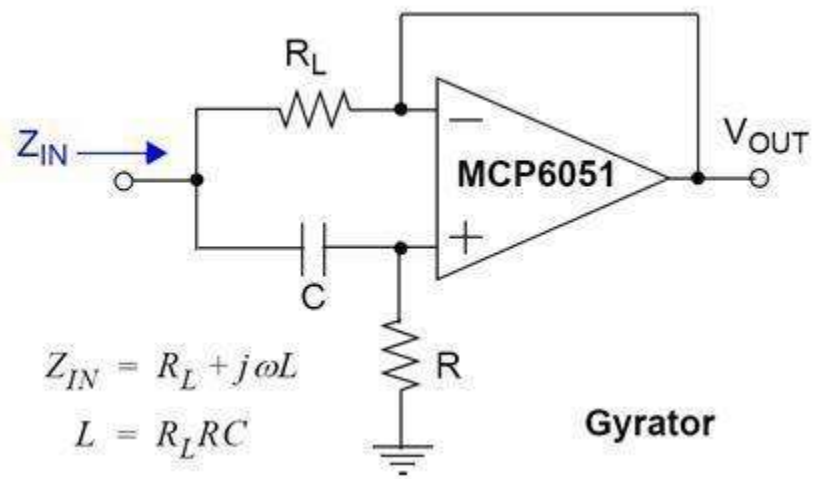

$$Z_{IN} = R_L + j\omega L$$

$$L = R_L RC$$

<< BACK

MCP6061/2/4

Online Datasheet

Features:

- Gain Bandwidth Product: 730kHz (typ.)
- Ultra Low Quiescent Current: 60µA (typ.)
- Low Offset Voltage: ±150µV (max.)
- Wide Power Supply Voltage: 1.8V to 6.0V
- Rail-to-Rail Input and Output
- Unity Gain Stable
- Extended Temperature Range: -40°C to +125°C

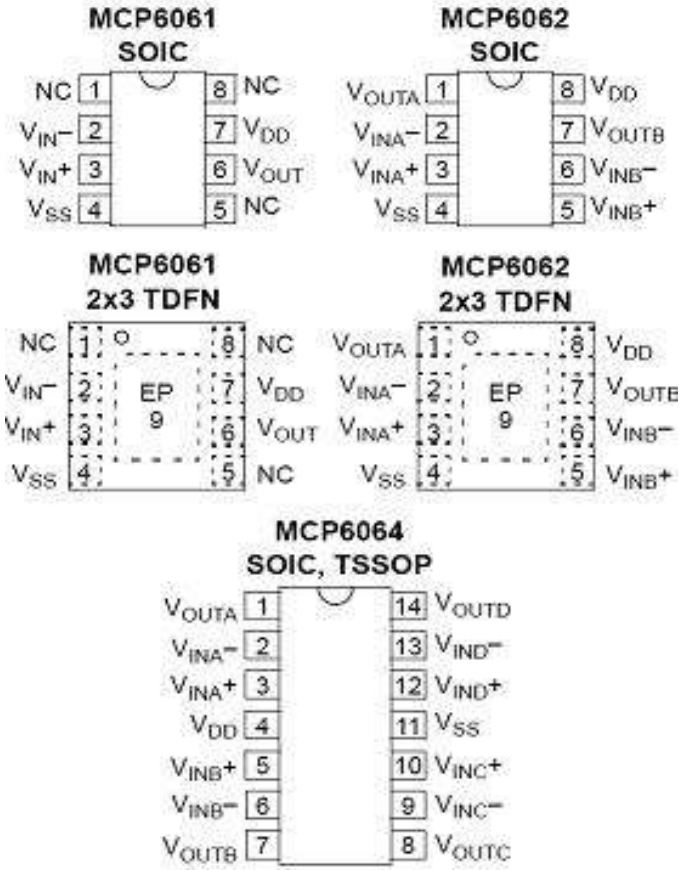

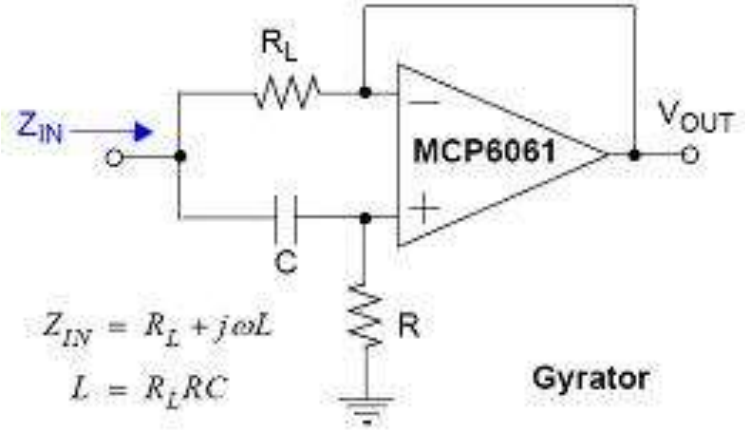

<< BACK

MCP6071/2/4

Online Datasheet

Features:

- Gain Bandwidth Product: 1.2MHz (typ.)
- Ultra Low Quiescent Current: 110µA (typ.)
- Low Offset Voltage: ±150µV (max.)
- Wide Power Supply Voltage: 1.8V to 6.0V
- Rail-to-Rail Input and Output
- Unity Gain Stable
- Extended Temperature Range: -40°C to +125°C

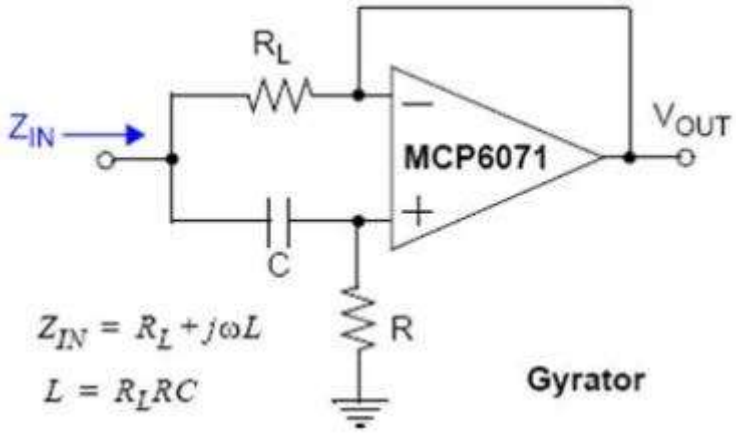

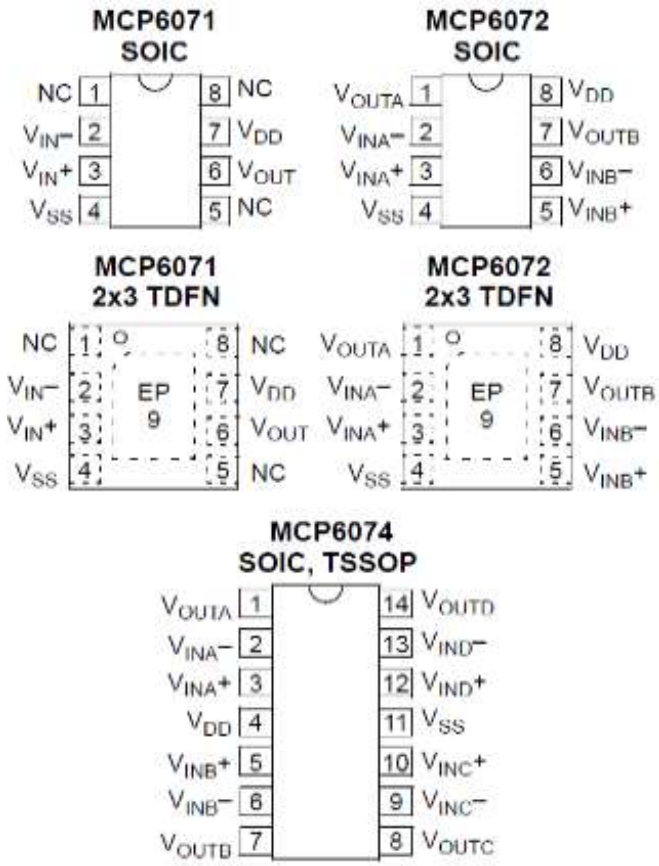

* Includes Exposed Thermal Pad (EP); see Table 3-1.

<< BACK

MCP6141/2/3/4

Online Datasheet

Features:

- Gain Bandwidth Product: 100kHz (typ.)
- Low Quiescent Current: 600nA/amplifier (typ.)
- Input Offset Voltage: ±3 mV (max)
- Wide Supply Voltage Range: 1.4V to 6V
- Stable for gains of 10 V/V or higher
- Rail-to-Rail Input/Output
- Available in Single, Dual, and Quad
- Chip Select (CS) with MCP6143
- Available in 5-lead and 6-lead SOT-23
- Temperature Ranges:
  Industrial: -40°C to +85°C
  Extended: -40°C to +125°C

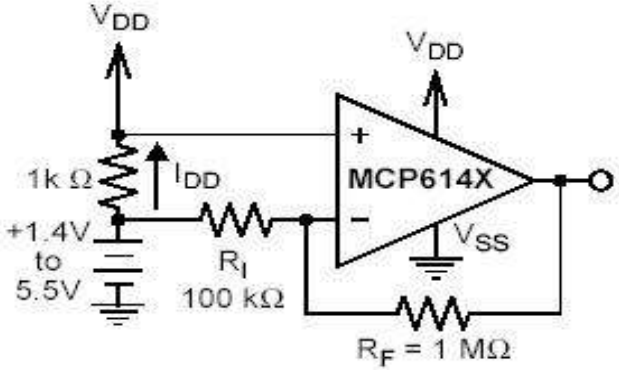

High Side Battery Current Sensor

$$G_n = \left(1 + \frac{R_F}{R_I}\right) \geq 10V/V$$

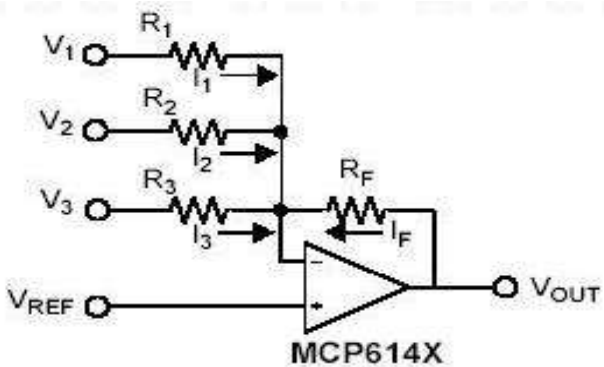

Summing Amplifier

$$G_n = 1 + R_F\left(\frac{1}{R_1} + \frac{1}{R_2} + \frac{1}{R_3}\right) \geq 10V/V$$

<< BACK

MCP6231/2/4

Online Datasheet

Features:

- Gain Bandwidth Product: 300kHz (typ.)
- Supply Current: I_Q = 20µA (typ.)
- Input Offset voltage: ±5 mV (max)
- Supply Voltage: 1.8V to 6V
- Rail-to-Rail Input/Output
- Extended Temperature Range:
  -40°C to + 125°C
- Available in 5-pin SC-70 and SOT-23

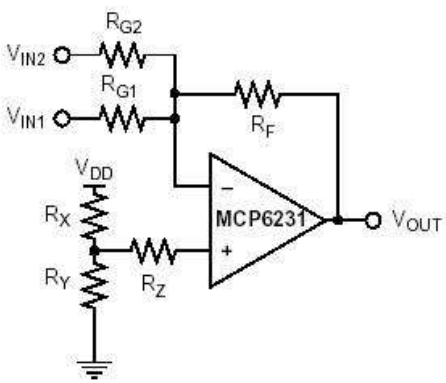

Summing Amplifier Circuit

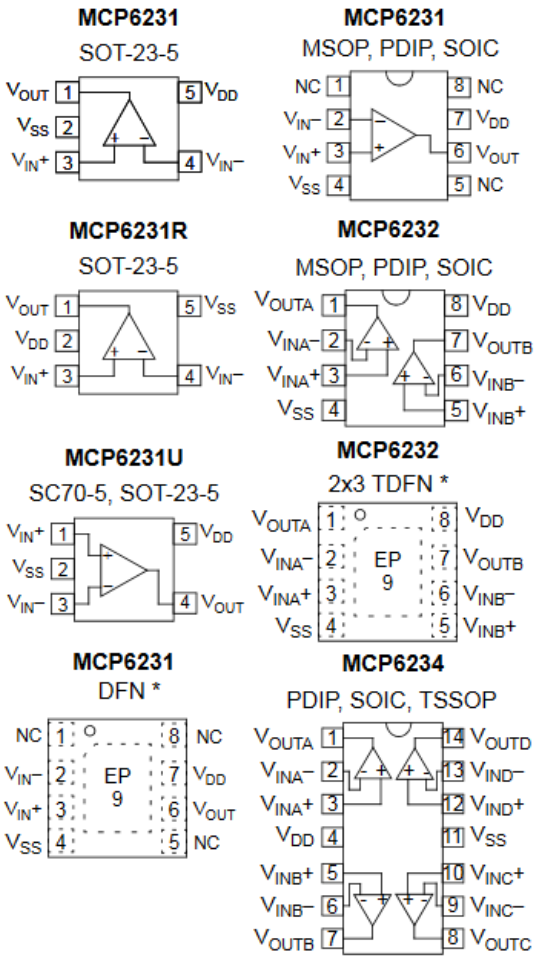

<< BACK

MCP6241/2/4

Online Datasheet

Features:

- Gain Bandwidth Product: 550kHz (typ.)
- Supply Current: I_Q = 50µA (typ.)
- Input Offset Voltage: ±5 mV (max)
- Supply Voltage: 1.8V to 5.5V
- Rail-to-Rail Input/Output
- Extended Temperature Range:
  -40°C to + 125°C
- Available in 5-pin SC-70 and SOT-23

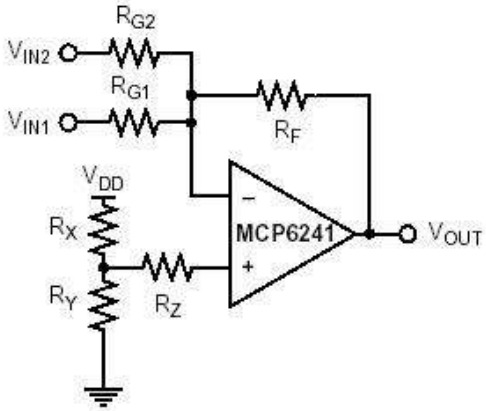

Summing Amplifier Circuit

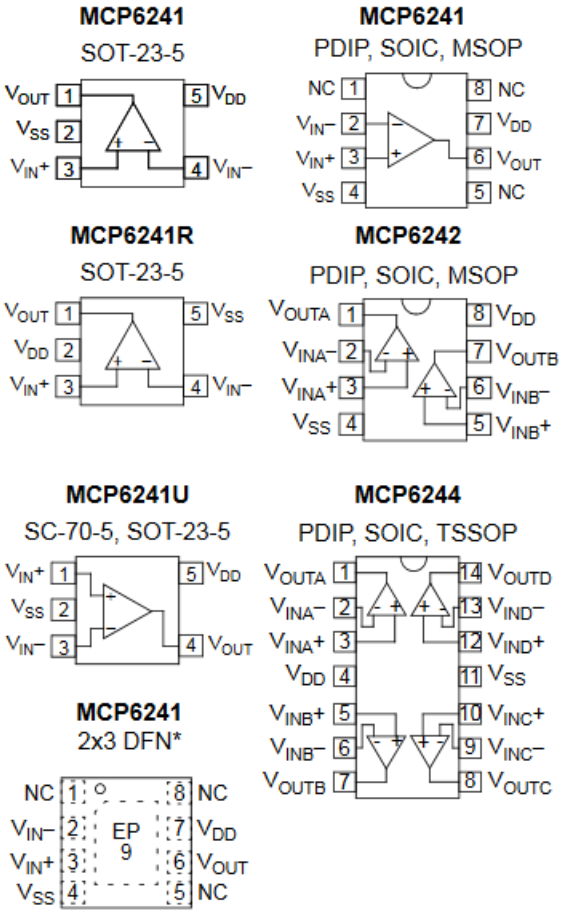

<< BACK

MCP6421/2/4

Online Datasheet

Features:

- Gain Bandwidth Product: 90kHz (typ.)
- Supply Current: I_Q = 4.4 µA (typ.)
- Input Offset Voltage: ±1 mV (max)
- Supply Voltage: 1.8V to 5.5V
- Rail-to-Rail Input/Output
- Enhanced EMI Protection:
  Electromagnetic Interference Rejection Ratio (EMIRR) 97 dB at 1.8 GHz
- Extended Temperature Range:
  -40°C to + 125°C
- Available in Single, Dual and Quad Packages

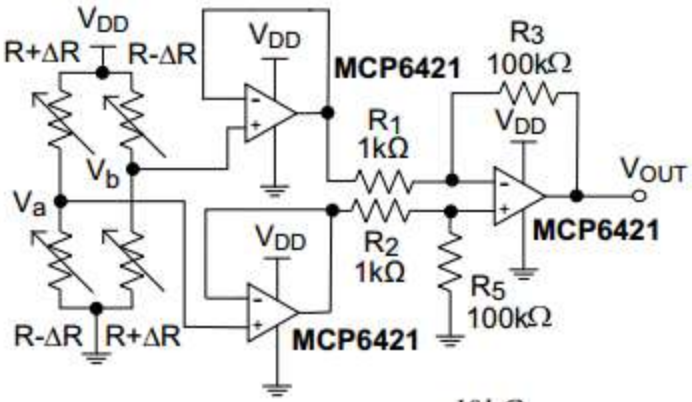

$$V_{OUT} = (V_a - V_b) \times \frac{10k\Omega}{100\Omega}$$

Strain Gauge

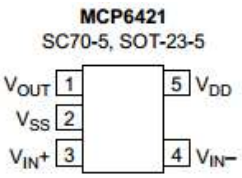

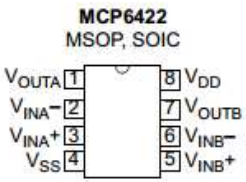

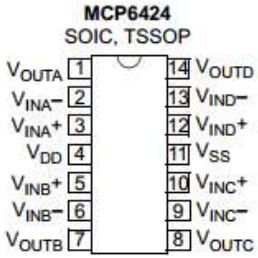

<< BACK

MCP6271/2/3/4

Online Datasheet

Features:

- Gain Bandwidth Product: 2MHz (typ.)
- Supply Current: I_Q = 170µA (typ.)
- Input Offset Voltage: ±3 mV (max)
- Supply Voltage: 2.0V to 6V
- Rail-to-Rail Input/Output
- Extended Temperature Range: -40°C to +125°C
- Available in Single, Dual and Quad Packages

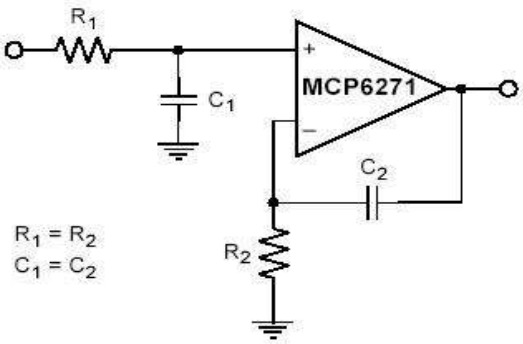

Non-Inverting Integrator

MCP6271 PDIP, SOIC, MSOP

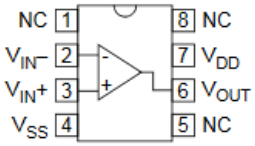

MCP6271 SOT-23-5

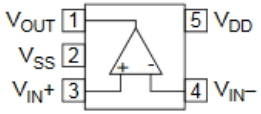

MCP6271R SOT-23-5

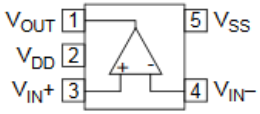

MCP6272 PDIP, SOIC, MSOP

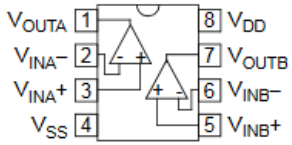

MCP6273 PDIP, SOIC, MSOP

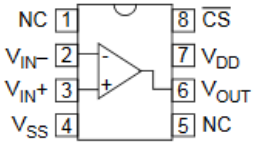

MCP6273 SOT-23-6

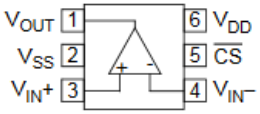

MCP6274 PDIP, SOIC, TSSOP

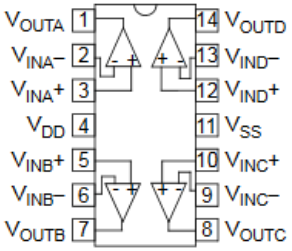

MCP6275 PDIP, SOIC, MSOP

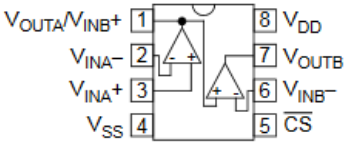

MCP6275 >>

MCP6285 >>

MCP6281/2/3/4 >>

MCP6295 >>

MCP6291/2/3/4 >>

<< BACK

MCP6281/2/3/4

Online Datasheet

Features:

- Gain Bandwidth Product: 5MHz (typ.)
- Supply Current: I_Q = 450µA (typ.)
- Input Offset Voltage: ±3 mV (max)
- Supply Voltage: 2.2V to 6V
- Rail-to-Rail Input/Output
- Extended Temperature Range: -40°C to +125°C
- Available in Single, Dual and Quad Packages

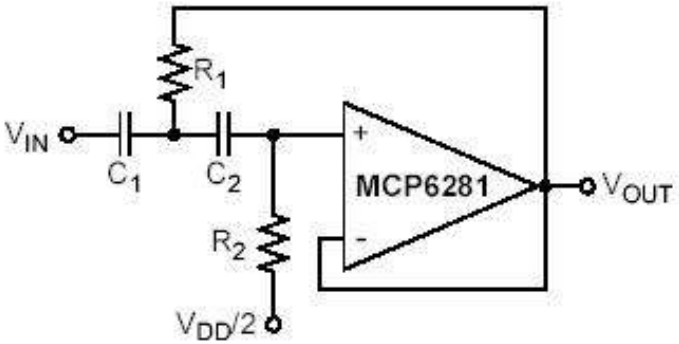

Sallen-Key Highpass Filter

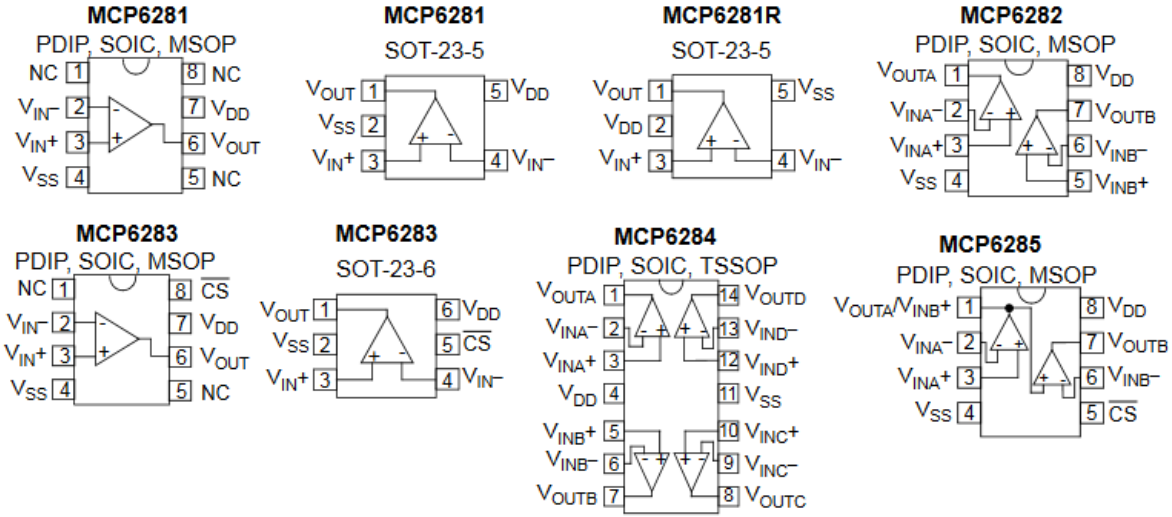

MCP6275 >>

MCP6271/2/3/4 >>

MCP6285 >>

MCP6295 >>

MCP6291/2/3/4 >>

<< BACK

MCP6286

Online Datasheet

Features:

- Low Noise: 5.4nV/√Hz (typ.)
- Gain Bandwidth Product: 3.5MHz (typ.)
- Low Quiescent Current: 520µA (typ.)
- Input Offset voltage: ±1.5 mV (max)
- Wide Supply Voltage Range: 2.2V to 5.5V
- PSRR: 100 dB (typ.), CMRR: 95 dB (typ.)
- Extended Temperature Range: -40°C to +125°C
- Unity Gain Stable
- Small Package: SOT- 23

Typical Application

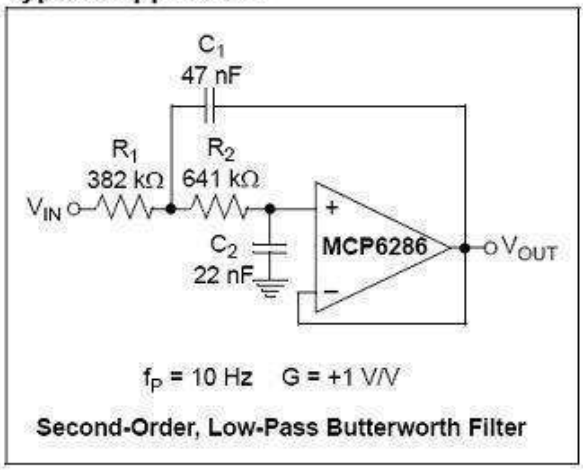

MCP6286
SOT-23-5

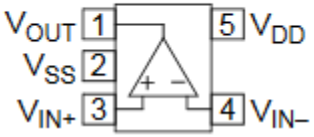

<< BACK

MCP6291/2/3/4

Online Datasheet

Features:

- Gain Bandwidth Product: 10MHz (typ.)
- Supply Current: I_Q = 1.0 mA (typ.)
- Supply Voltage: 2.4V to 6V
- Input Offset Voltage: ±3 mV (max)
- Rail-to-Rail Input/Output
- Extended Temperature Range: -40°C to +125°C
- Available in Single, Dual and Quad Packages

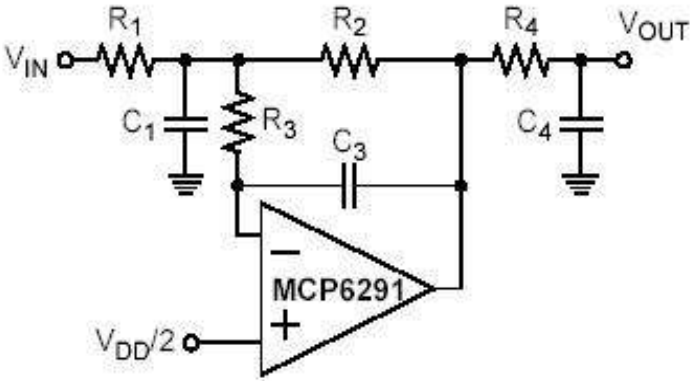

Multiple Feedback Lowpass Filter

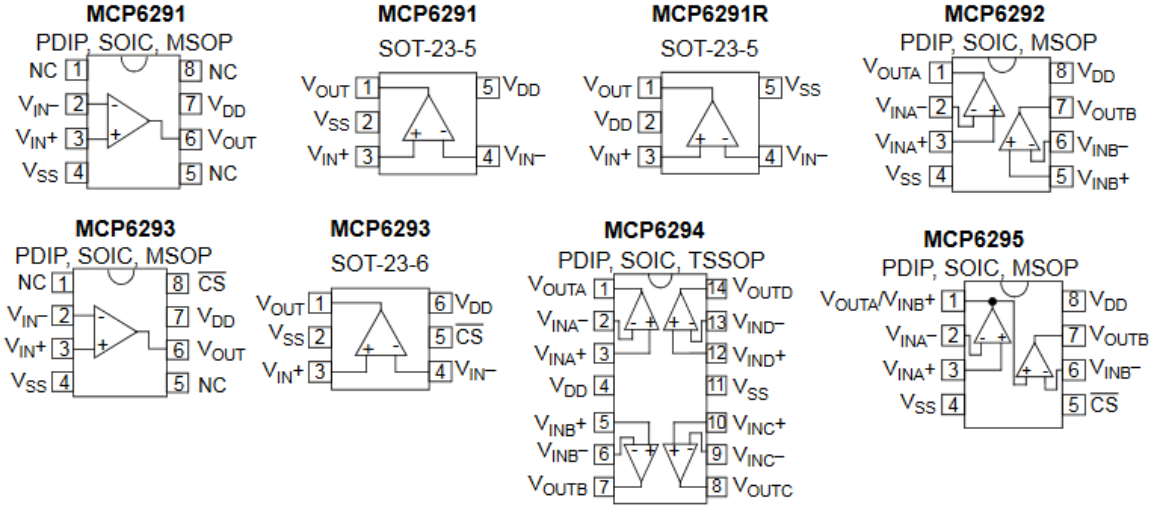

MCP6275 >>

MCP6271/2/3/4 >>

MCP6285 >>

MCP6281/2/3/4 >>

MCP6295 >>

<< BACK

MCP6275

Online Datasheet

Features:

- Gain Bandwidth Product: 2 MHz (typ.)
- Supply Current: I_Q = 170 µA (typ.)
- Input Offset Voltage: ±3 mV (max)
- Supply Voltage: 2.0V to 6V
- Rail-to-Rail Input/Output
- Dual with Chip Select
- Extended Temperature Range:
  –40°C to +125°C

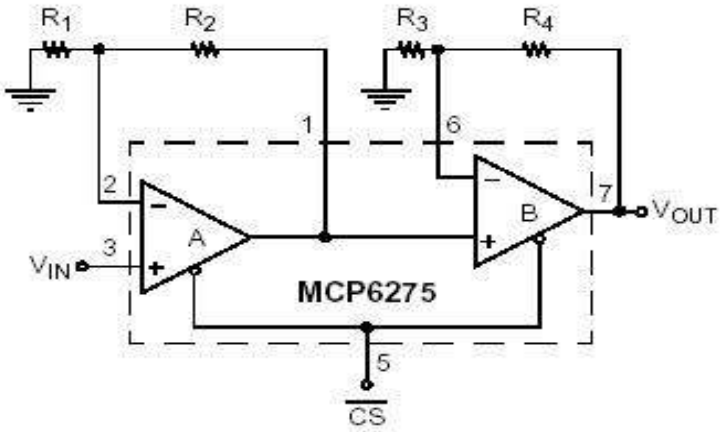

Cascaded Gain with Chip Select

MCP6275
PDIP, SOIC, MSOP

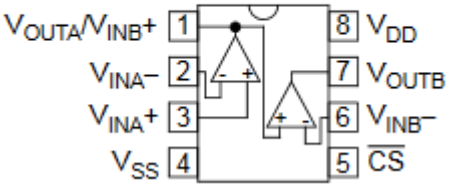

MCP6271/2/3/4 >>

MCP6285 >>

MCP6281/2/3/4 >>

MCP6295 >>

MCP6291/2/3/4 >>

<< BACK

MCP6285

Online Datasheet

Features:

- Gain Bandwidth Product: 2 MHz (typ.)
- Supply Current: I_Q = 170 µA (typ.)
- Input Offset Voltage: ±3 mV (max)
- Supply Voltage: 2.0V to 6V
- Rail-to-Rail Input/Output
- Dual with Chip Select
- Extended Temperature Range:
  –40°C to +125°C

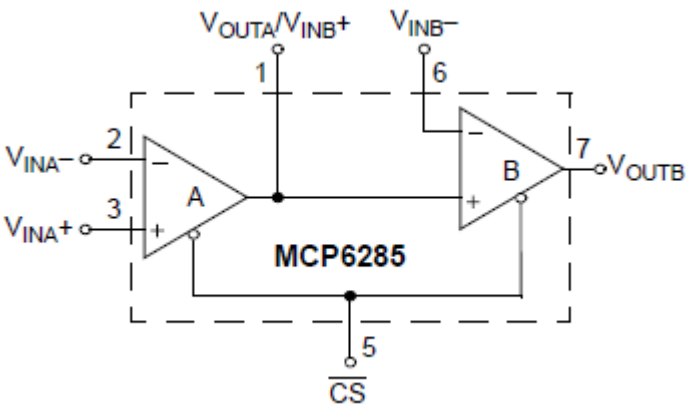

Cascaded Gain Amplifier

MCP6285

PDIP, SOIC, MSOP

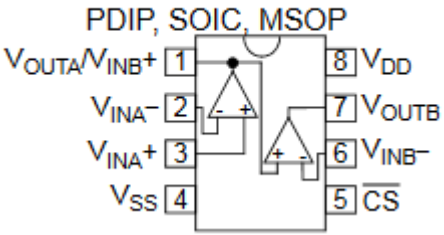

MCP6275 >>

MCP6271/2/3/4 >>

MCP6281/2/3/4 >>

MCP6295 >>

MCP6291/2/3/4 >>

<< BACK

MCP6295

Online Datasheet

Features:

- Gain Bandwidth Product: 10 MHz (typ.)
- Supply Current: I_Q = 1.0 mA (typ.)
- Input Offset Voltage: ±3 mV (max)
- Supply Voltage: 2.4V to 6V
- Rail-to-Rail Input/Output
- Dual with Chip Select
- Extended Temperature Range:
  -40°C to +125°C

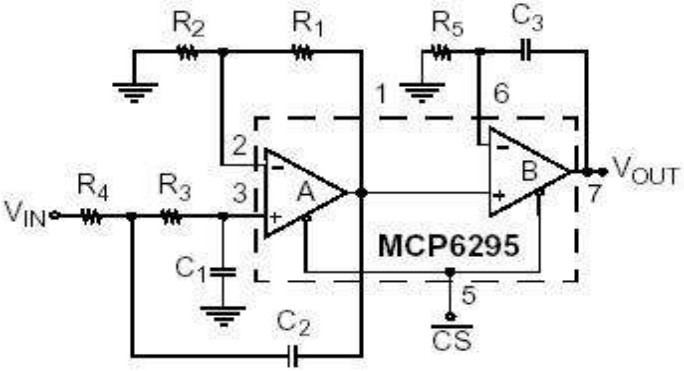

Second-Order Sallen-Key Low-Pass Filter with an Extra Pole-Zero Pair and a Chip Select.

MCP6295

PDIP, SOIC, MSOP

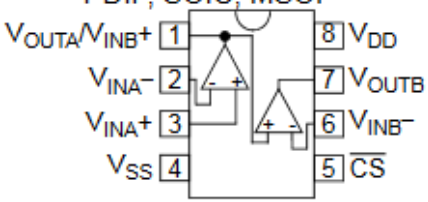

MCP6275 >>

MCP6271/2/3/4 >>

MCP6285 >>

MCP6281/2/3/4 >>

MCP6291/2/3/4 >>

<< BACK

MCP6471/2/4

Online Datasheet

Features:

- Gain Bandwidth Product: 2 MHz (typ.)
- Supply Current: I_Q = 100 µA (typ.)
- Input Offset Voltage: ±1.5 mV (max)
- Supply Voltage: 2.0V to 5.5V
- Rail-to-Rail Input/Output
- Extended Temperature Range: -40°C to +125°C
- Available in Single, Dual and Quad Packages

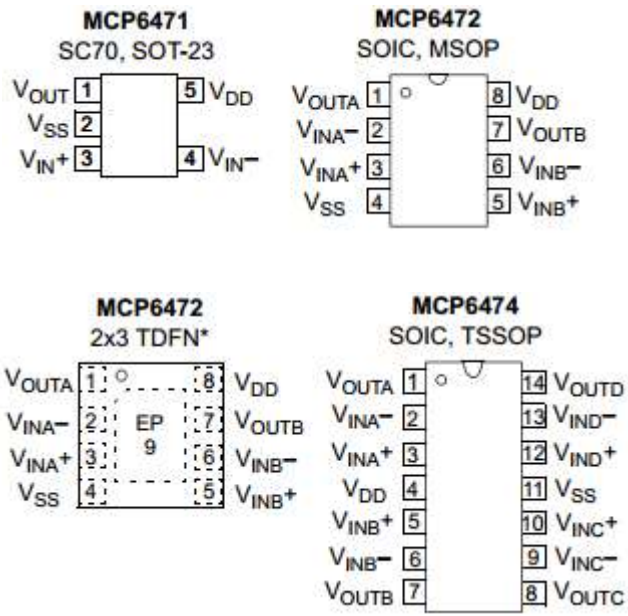

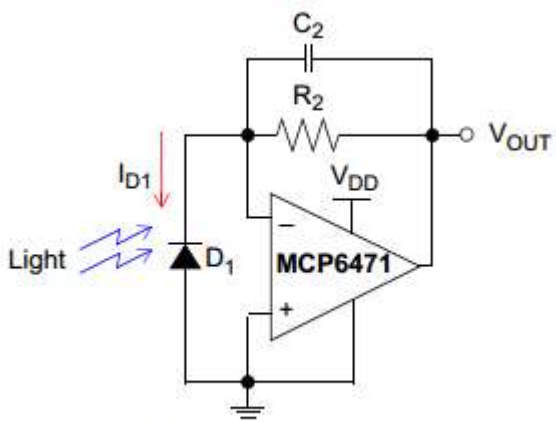

Photodiode Amplifier

MCP6481/2/4 >>

MCP6491/2/4 >>

<< BACK

MCP6481/2/4

Online Datasheet

Features:

- Gain Bandwidth Product: 4 MHz (typ.)
- Supply Current: I_Q = 240 µA (typ.)
- Input Offset Voltage: ±1.5 mV (max)
- Supply Voltage: 2.0V to 5.5V
- Rail-to-Rail Input/Output
- Extended Temperature Range: -40°C to +125°C
- Available in Single, Dual and Quad Packages

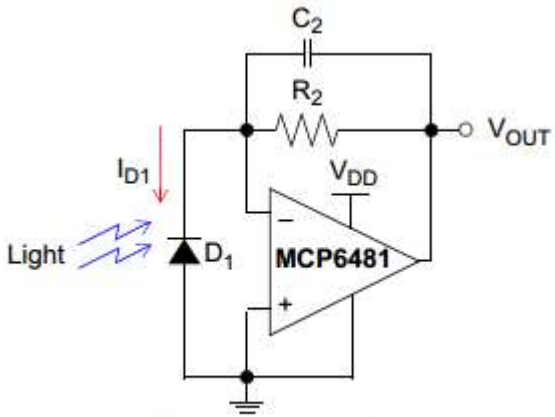

Photodiode Amplifier

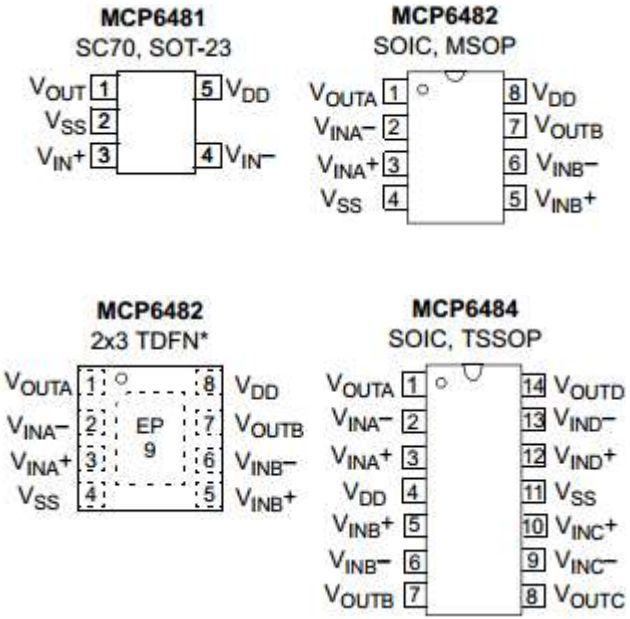

MCP6471/2/4 >>

MCP6491/2/4 >>

<< BACK

MCP6491/2/4

Online Datasheet

Features:

- Gain Bandwidth Product: 7.5 MHz (typ.)
- Supply Current: I_Q = 530 µA (typ.)
- Input Offset Voltage: ±1.5 mV (max)
- Supply Voltage: 2.0V to 5.5V
- Rail-to-Rail Input/Output
- Extended Temperature Range: -40°C to +125°C
- Available in Single, Dual and Quad Packages

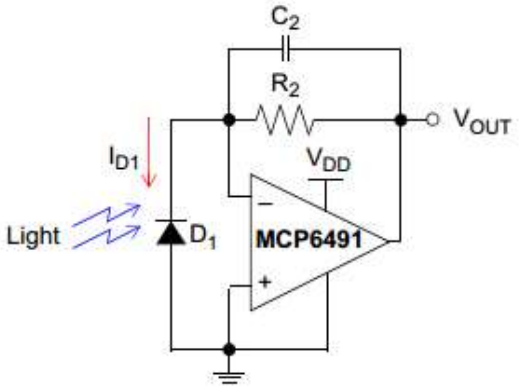

Photodiode Amplifier

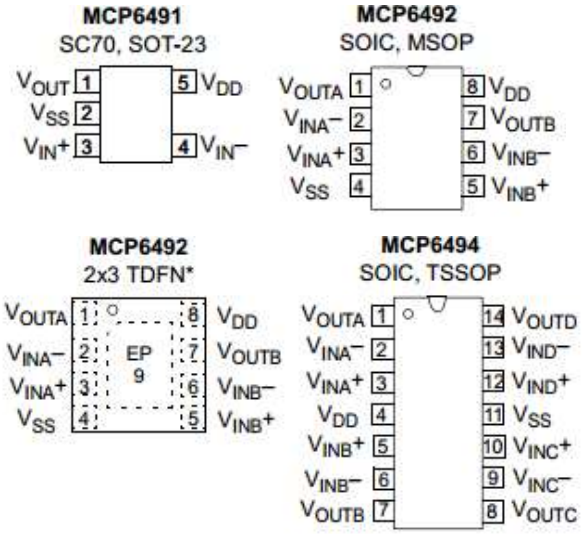

MCP6471/2/4 >>

MCP6481/2/4 >>

<< BACK

MCP6V01/2/3

Online Datasheet

Features:

- Gain Bandwidth Product: 1.3 MHz (typ.)
- Low Power and Supply Voltages:
  - I_Q: 300µA/amplifier (typ.)
  - Wide Supply Voltage Range: 1.8V to 5.5V
- High DC Precision:
  - V_{OS} Drift: ±50nV/°C (max.)
  - Input Offset Voltage: V_{OS}= ±2 µV (max.)
  - AOL: 130 dB (min.)
  - PSRR: 130 dB (min.)
  - CMRR: 130 dB (min.)
  - Eni: 2.5 μV_{P-P} (typ.), f = 0.1Hz to 10Hz
  - Eni: 0.79 μV_{P-P} (typ.), f = 0.01Hz to 1Hz
- Rail-to-Rail Input/Output
- Unity Gain Stable
- Available in Single and Dual
  - Single with Chip Select (CS): MCP6V03
- Extended Temperature Range:
  -40°C to +125°C

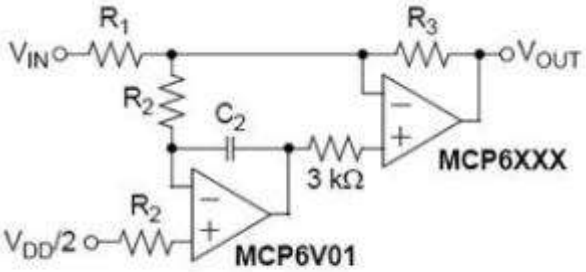

Offset Voltage Correction for Power Driver

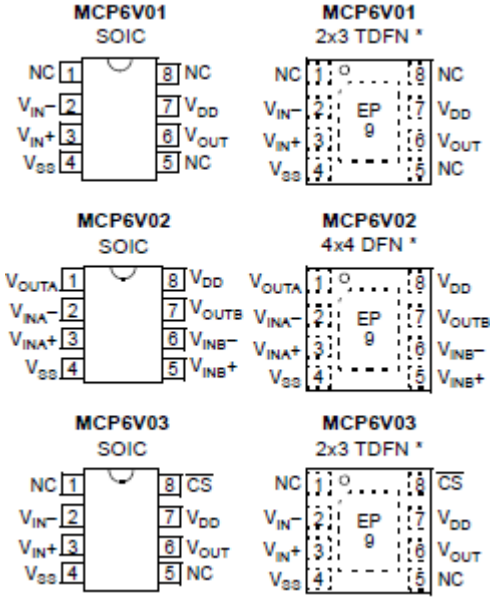

<< BACK

MCP6V06/7/8

Online Datasheet

Features:

- Gain Bandwidth Product: 1.3 MHz (typ.)
- Low Power and Supply Voltages:
  - I_Q: 300µA/amplifier (typ.)
  - Wide Supply Voltage Range: 1.8V to 5.5V
- High DC Precision:
  - Input Offset Voltage: ±3 µV (max.)
  - V_{OS} Drift: ±50nV/°C (max.)
  - AOL: 125 dB (min.)
  - PSRR: 125 dB (min.)
  - CMRR: 120 dB (min.)
  - Eni: 1.7 μV_{P-P} (typ.), f = 0.1Hz to 10Hz
  - Eni: 0.54 μV_{P-P} (typ.), f = 0.01Hz to 1Hz
- Rail-to-Rail Input/Output
- Unity Gain Stable
- Available in Single and Dual
  - Single with Chip Select (CS): MCP6V08
- Extended Temperature Range: -40°C to 125°C

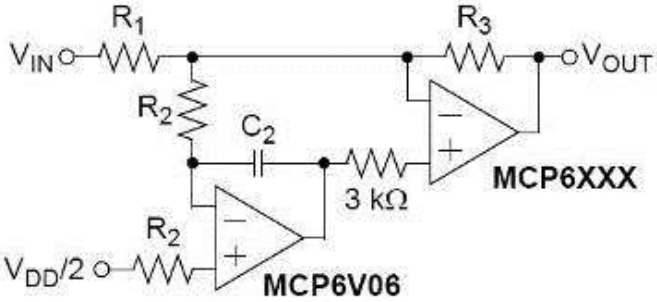

Offset Voltage Correction for Power Driver

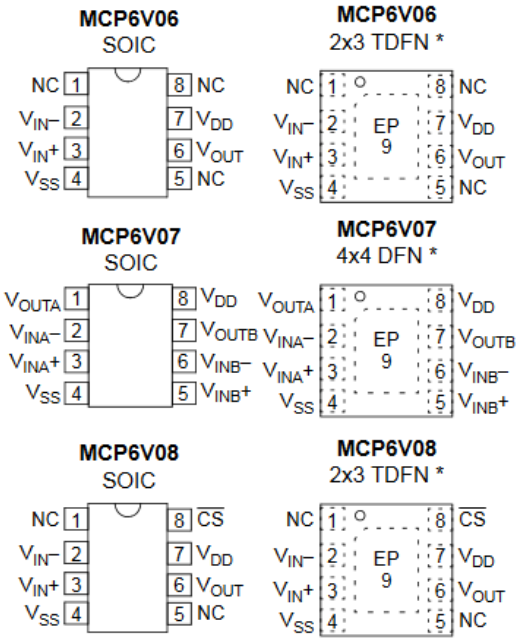

<< BACK

MCP6V11/1U/2/4

Online Datasheet

Features:

- Gain Bandwidth Product: 80 kHz (typ.)
- Low Power and Supply Voltages:
  - I_Q: 7.5 µA/amplifier (typ.)
  - Wide Supply Voltage Range: 1.6V to 5.5V
- High DC Precision:
  - Input Offset Voltage: ±8 µV (max.)
  - V_{OS} Drift: ±50nV/°C (max.)
  - AOL: 112 dB (min.)
  - PSRR: 118 dB (min.)
  - CMRR: 119 dB (min.)
  - Eni: 2.1 μV_{P-P} (typ.), f = 0.1Hz to 10Hz
  - Eni: 0.67 μV_{P-P} (typ.), f = 0.01Hz to 1Hz
- Rail-to-Rail Input/Output
- Unity Gain Stable
- Small Packages:
  - Singles in SC70, SOT-23
  - Duals in MSOP-8, 2x3 TDFN
  - Quad in TSSOP-14
- Extended Temperature Range: -40°C to 125°C

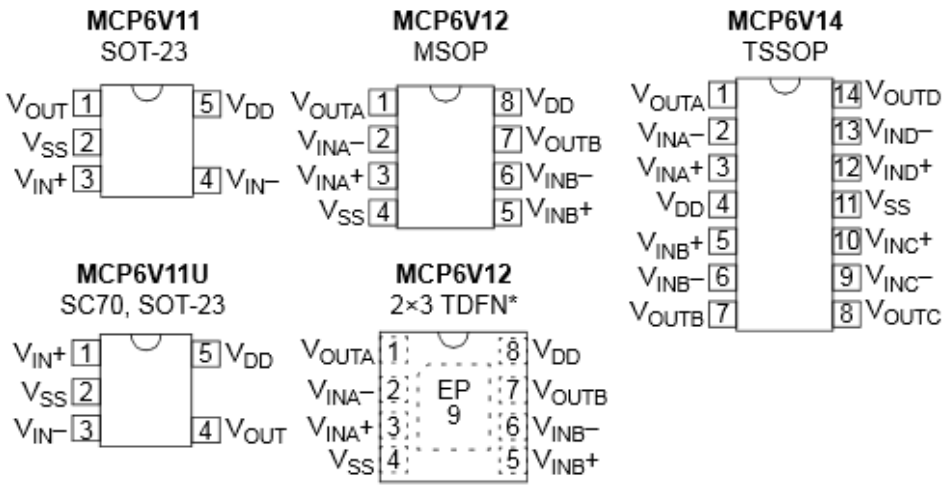

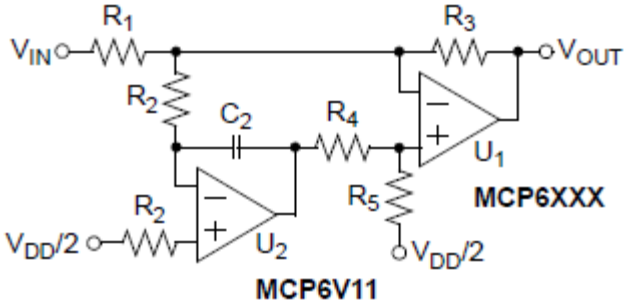

Offset Voltage Correction for Power Driver

<< BACK

MCP6V31/2/4

Online Datasheet

Features:

- Gain Bandwidth Product: 300 kHz (typ.)
- Low Power and Supply Voltages:
  - I_Q: 23 µA/amplifier (typ.)
  - Wide Supply Voltage Range: 1.8V to 5.5V
- High DC Precision:
  - Input Offset Voltage: ±8 µV (max.)
  - V_{OS} Drift: ±50nV/°C (max.)
  - AOL: 120 dB (min.)
  - PSRR: 120 dB (min.)
  - CMRR: 120 dB (min.)
  - Eni: 1.0 μV_{P-P} (typ.), f = 0.1Hz to 10Hz
  - Eni: 0.33 μV_{P-P} (typ.), f = 0.01Hz to 1Hz
- Rail-to-Rail Input/Output
- Unity Gain Stable
- Small Packages:
  - Singles in SC70, SOT-23
  - Duals in MSOP-8, 2x3 TDFN
  - Quad in TSSOP-14
- Extended Temperature Range: -40°C to 125°C

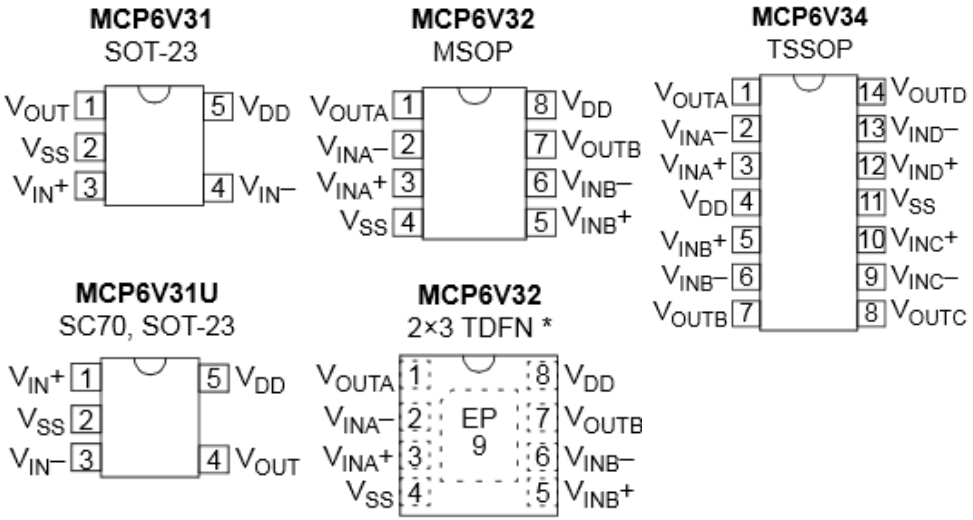

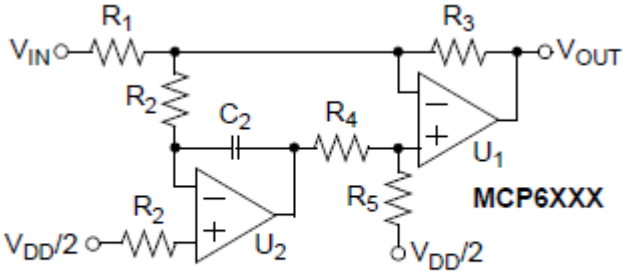

MCP6V31

Offset Voltage Correction for Power Driver

<< BACK

MCP6V26/7/8

Online Datasheet

Features:

- Gain Bandwidth Product: 2 MHz (typ.)
- Supply Current: 620 µA/amplifier (typ.)
- Input Offset Voltage (max): ±2 µV (max.)
- Supply Voltage Range: 2.3V to 5.5V
- Single and Dual Channel
- High DC Precision:
  - VOS Drift: ±50 nV/°C (max.)
  - AOL: 133 dB (min.)
  - PSRR: 125 dB (min.)
  - CMRR: 125 dB (min.)
  - Eni: 1 µVP-P (typ.), f = 0.1 Hz to 10 Hz
  - Eni: 0.32 µVp-p (typ.), f = 0.01 Hz to 1 Hz
- Rail-to-Rail Input/Output
- Unity Gain Stable
- 8-Pin SOIC and 4x4 DFN Packages
- Extended Temperature Range: -40°C to +125°C

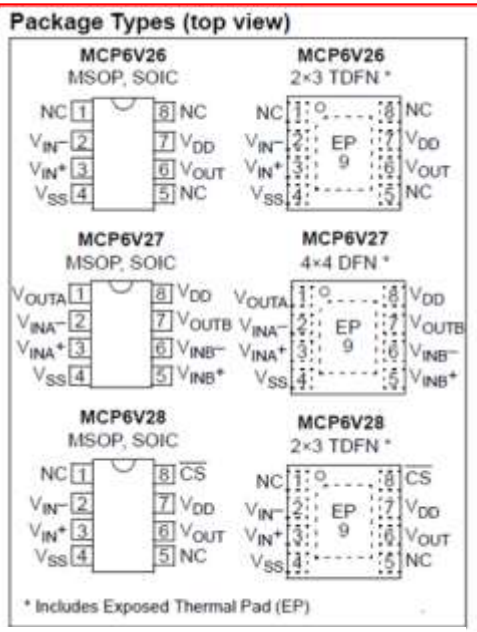

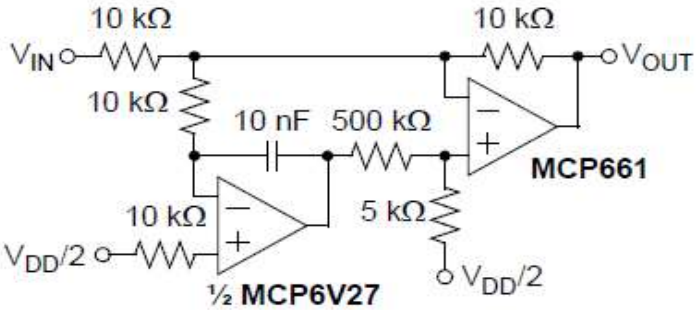

Offset Voltage Correction for Power Driver

<< BACK

MCP6V61/2/4

Online Datasheet

Features:

- Gain Bandwidth Product: 1 MHz (typ.)
- Supply Current: 80 µA/amplifier (typ.)
- Input Offset Voltage (max): ±8 µV (max.)
- Supply Voltage Range: 1.8V to 5.5V
- High DC Precision:
  - VOS Drift: ±15 nV/°C (max.)
  - AOL: 125 dB (min.)
  - PSRR: 117 dB (min.)
  - CMRR: 120 dB (min.)
  - Eni: 0.54 µVP-P (typ.), f = 0.1 Hz to 10 Hz
  - Eni: 0.17 µVp-p (typ.), f = 0.01 Hz to 1 Hz
- Rail-to-Rail Input/Output
- Unity Gain Stable
- Enhanced EMI Rejection
- Small Packages
  - Single: 5-pin SC-70, SOT-23
  - Dual: 8-pin MSOP, 8-pin 2x3 TDFN
  - Quad: 14-pin TSSOP
- Extended Temperature Range: -40°C to +125°C

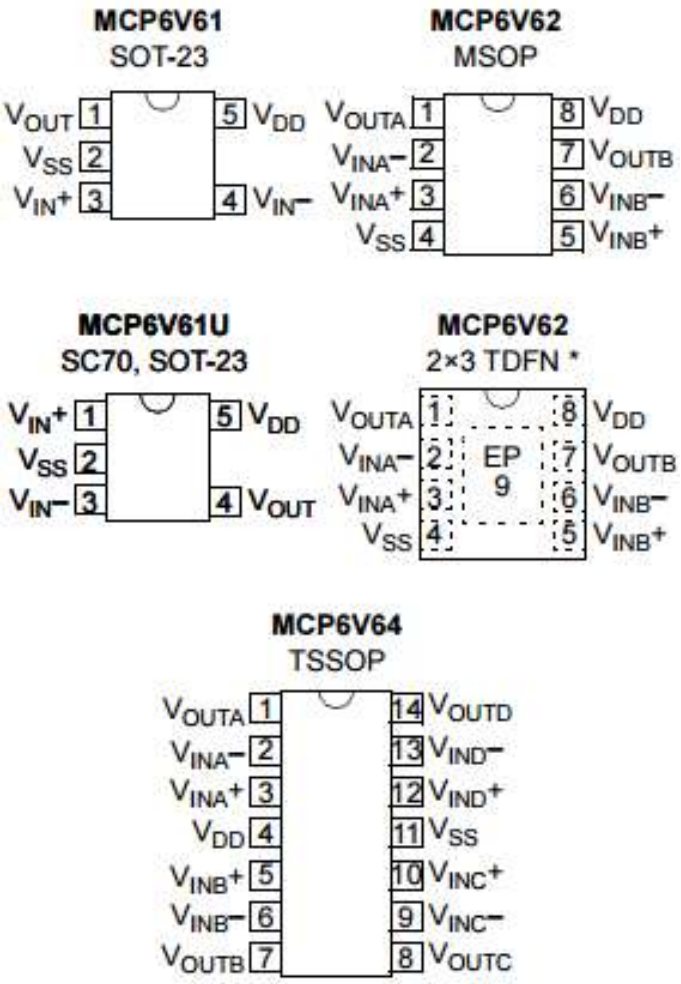

<< BACK

MCP6V71/2/4

Online Datasheet

Features:

- Gain Bandwidth Product: 2 MHz (typ.)
- Supply Current: 170 µA/amplifier (typ.)
- Input Offset Voltage (max): ±8 µV (max.)
- Supply Voltage Range: 2.0V to 5.5V
- High DC Precision:
  - VOS Drift: ±15 nV/°C (max.)
  - AOL: 126 dB (min.)
  - PSRR: 115 dB (min.)
  - CMRR: 117 dB (min.)
  - Eni: 0.45 µVP-P (typ.), f = 0.1 Hz to 10 Hz
  - Eni: 0.15 µVp-p (typ.), f = 0.01 Hz to 1 Hz
- Rail-to-Rail Input/Output
- Unity Gain Stable
- Enhanced EMI Rejection
- Small Packages
  - •Single: 5-pin SC-70, SOT-23
  - •Dual: 8-pin MSOP, 8-pin 2x3 TDFN
  - •Quad: 14-pin TSSOP
- Extended Temperature Range: -40°C to +125°C

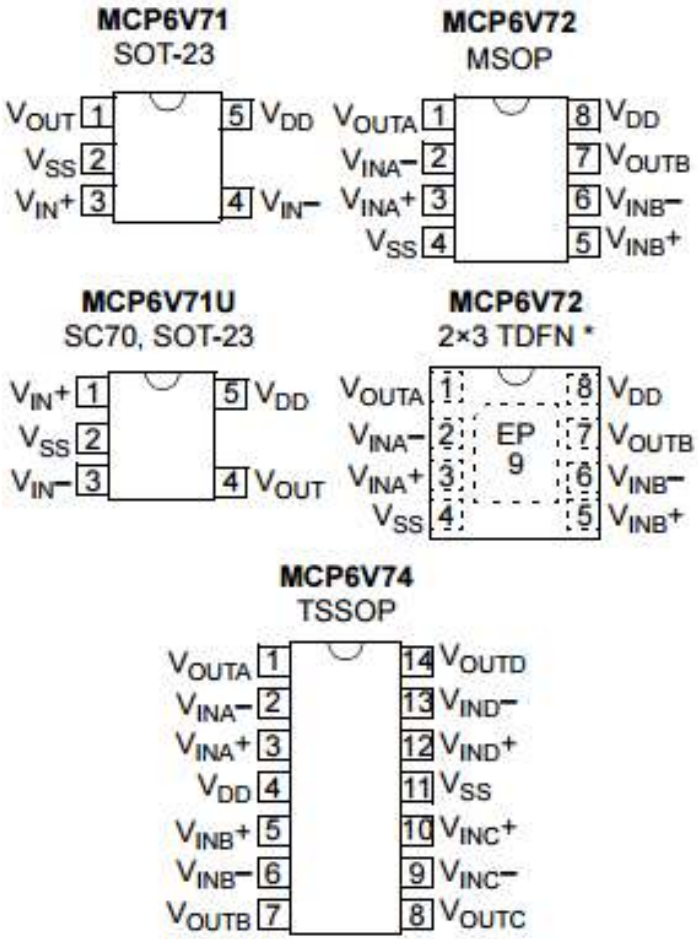

<< BACK

MCP6V81/2/4

Online Datasheet

Features:

- Gain Bandwidth Product: 5 MHz (typ.)
- Supply Current: 500 µA/amplifier (typ.)
- Input Offset Voltage (max): ±9 µV (max.)
- Supply Voltage Range: 2.2V to 5.5V
- High DC Precision:
  - VOS Drift: ±20 nV/°C (max.)
  - AOL: 126 dB (min.)
  - PSRR: 117 dB (min.)
  - CMRR: 118 dB (min.)
  - Eni: 0.28 µVP-P (typ.), f = 0.1 Hz to 10 Hz
  - Eni: 0.10 µVp-p (typ.), f = 0.01 Hz to 1 Hz
- Rail-to-Rail Input/Output
- Unity Gain Stable
- Enhanced EMI rejection
- Packages
  - Single: 5-pin SC-70, SOT-23
  - Dual: 8-pin MSOP, 8-pin 2x3 TDFN
  - Quad: 14-pin TSSOP
- Extended Temperature Range: -40°C to +125°C

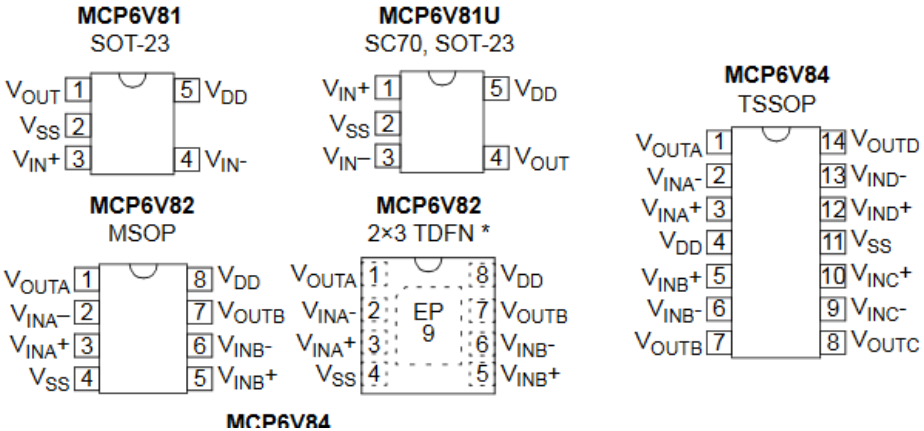

Typical Application Circuit

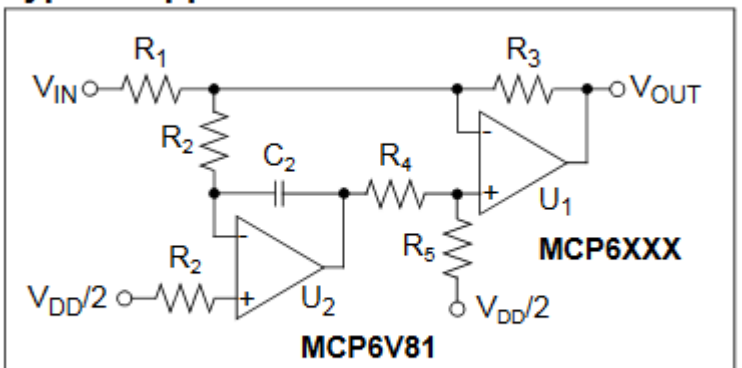

Offset Voltage Correction for Power Driver

<< BACK

MCP6V91/1U/2/4

Online Datasheet

Features:

- Gain Bandwidth Product: 10 MHz (typ.)
- Supply Current: 1100 µA/amplifier (typ.)
- Input Offset Voltage (max): ±9 µV (max.)
- Supply Voltage Range: 2.4V to 5.5V
- High DC Precision:
  - Vos Drift: ±20 nV/°C (max.)
  - AOL: 126 dB (min.)
  - PSRR: 117 dB (min.)
  - CMRR: 118 dB (min.)
- Rail-to-Rail Input/Output
- Unity Gain Stable
- Enhanced EMI rejection
- Packages
  - Single: 5-pin SC-70, SOT-23
  - Dual: 8-pin MSOP, 8-pin 2x3 TDFN
  - Quad: 14-pin TSSOP
- Extended Temperature Range: -40°C to +125°C

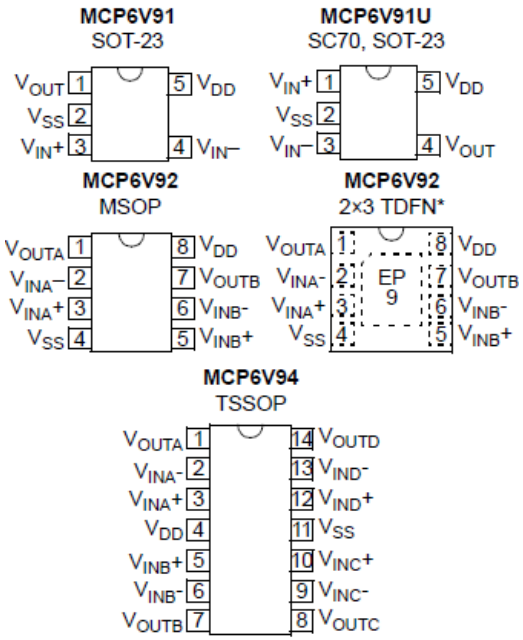

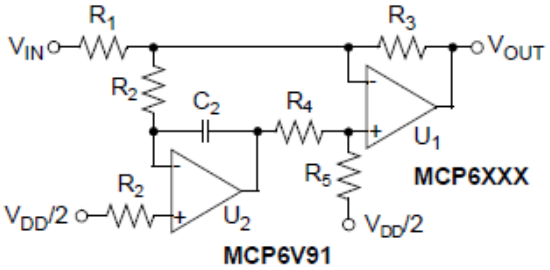

Offset Voltage Correction for Power Driver

<< BACK

MCP6Hxx

Product	# per Package	GBWP (kHz)	Iq Typical (µA)	Iq Max (uA)	Vos Max (uV)	Operating Voltage Range (V)	Rail-To-Rail	Packages	Online Datasheet
MCP6H01/2/4	1/2/4	1200	135	185	3500	3.5 - 16	Out	5/SC-70, 8/TDFN, 8/SOIC, 14/TSSOP, 14/SOIC,	MCP6H01/2/4 Datasheet
MCP6H71/2/4	1/2/4	2700	480	600	4000	3.5 - 12	Out		MCP6H71/2/4 Datasheet
MCP6H81/2/4	1/2/4	5500	700	1300	4000	3.5 - 12	Out		MCP6H81/2/4 Datasheet
MCP6H91/2/4	1/2/4	10000	2000	2800	4000	3.5 - 12	Out		MCP6H91/2/4 Datasheet

<< BACK

TC7650

Online Datasheet

Features:

- Gain Bandwidth: 2 MHz
- Supply current: 3.5 mA (max)
- Low Input Offset Voltage: ±5 µV (typ.)
- Supply Voltage Range: 4.5V to 16V
- Low Input Offset Voltage Drift: 0.05µV/°C (max.)
- Low Input Bias Current: 10pA (max.)
- High Impedance Differential CMOS Inputs: $10^{12}\Omega$
- High Open Loop Voltage Gain: 120dB (min.)
- Low Input Noise Voltage: $2.0\mu V_{P-P}$
- High Slew Rate: 2.5V/µs
- Low Power Operation: 20mW
- Output Clamp Speeds Recovery Time
- Compensated Internally for Stable Unity Gain
- Direct Replacement for ICL7650
- Available in 8-Pin PDIP and 14-Pin PDIP

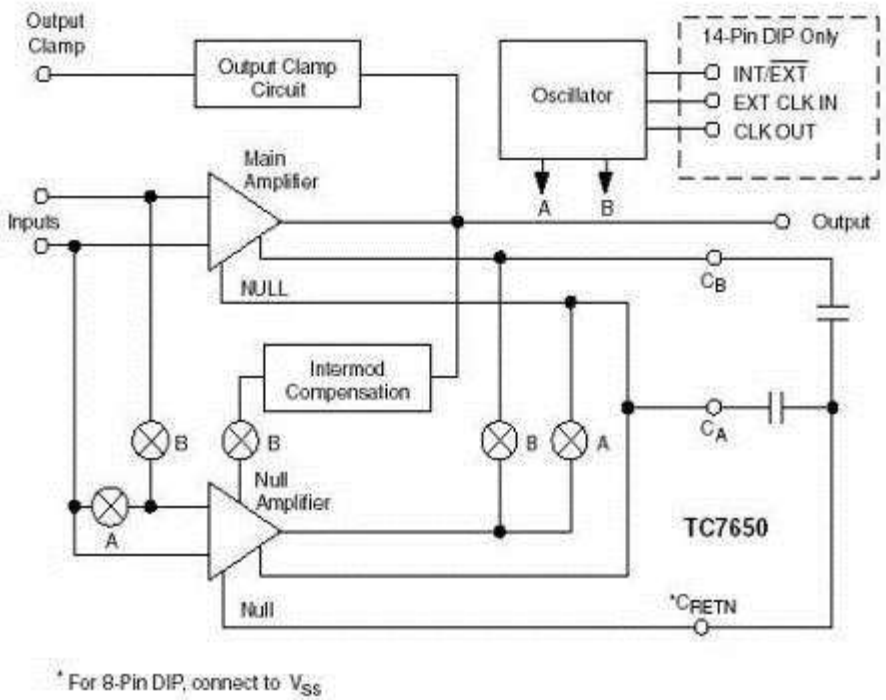

<< BACK

TC7652

Online Datasheet

Features:

- Gain Bandwidth Product: 0.4 MHz
- Supply Current: 3 mA (max)
- Low Offset Over Temperature Voltage: 10µV
- Supply Voltage Range: 5V to 16V
- Ultra Low Long Term Drift: 150nV/month
- Low Temperature Drift: 100nV/°C
- Low DC Input Bias Current: 15pA
- High Gain, CMRR and PSRR: 110dB (min.)
- Low Input Noise Voltage: 0.2µV_{P-P} (DC to 1Hz)
- Compensated Internally for Stable Unity Gain
- Clamp circuit for Fast Overload Recovery

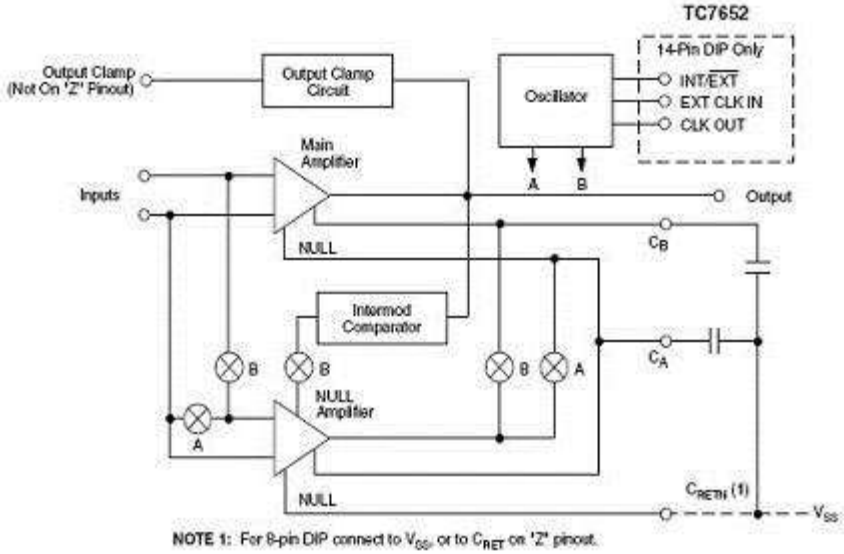

<< BACK

MCP6N11

Online Datasheet

Features:

- Bandwidth: 500 kHz (typical, Gain = GMIN)
- Rail-to-Rail Input and Output
- Gain Set by 2 External Resistors
- Minimum Gain (GMIN) Options: n1, 2, 5, 10 or 100 V/V
- Common Mode Rejection Ratio (CMRR): 115 dB (typical, GMIN = 100)
- Power Supply Rejection Ratio (PSRR): 112 dB (typical, GMIN = 100)
- Supply Current: 800 µA/channel (typical)
- Single Channel
- Enable/VOS Calibration pin: (EN/CAL)
- Power Supply: 1.8V to 5.5V
- Extended Temperature Range: -40°C to +125°C

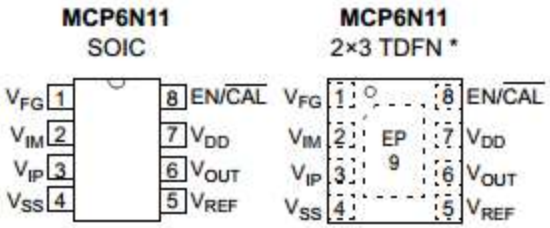

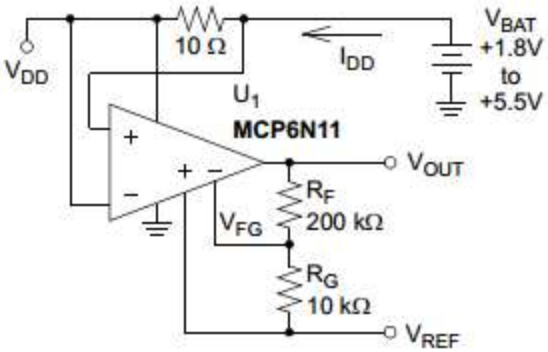

<< BACK

MCP6N16

Online Datasheet

Features:

- Zero-Drift Architecture
  - Low Vos, 17 uV (Gmin = 100)
  - Low offset drift: ±60 nV/˚C
  - No 1/f noise
  - CMRR: 112 dB minimum
  - PSRR: 110 dB minimum
- Flexibility
  - Rail to rail input/output
  - Gain set by two external resistors
- Enhanced EMI Protection
- Bandwidth of 500 kHz
- Operating voltage: 1.8 to 5.5V

MCP6N16
MSOP

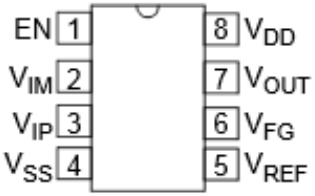

MCP6N16
3×3 DFN *

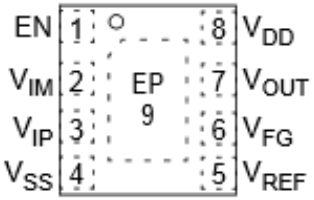

RTD Temperature Sensor

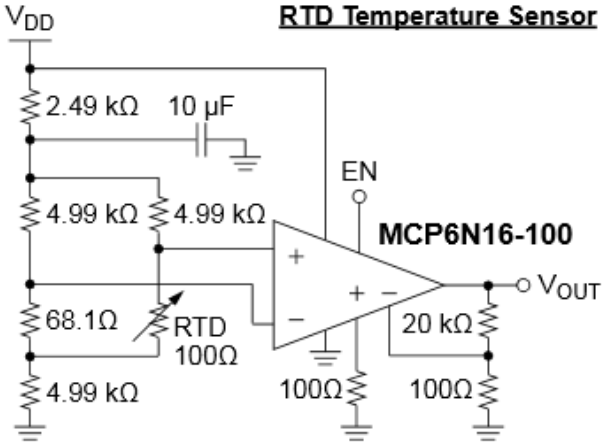

<< BACK

MCP6S21/2/6/8

Online Datasheet

Features:

- Multiplexed Inputs: 1, 2, 6 or 8 Channels
- 8 Gain Selections:
  +1, +2, +4, +5, +8, +10, +16, or +32 V/V
- Serial Peripheral Interface (SPI)
- Rail-to-Rail Input and Output
- Low Gain Error: ±1% (max.)
- Low Offset: ±275µV (max.)
- High Bandwidth: 2 to 12MHz (typ.)
- Low Noise: 10nV/√Hz @ 10kHz (typ.)
- Low Supply Current 1.0mA (typ.)
- Single Supply: 2.5V to 5.5V

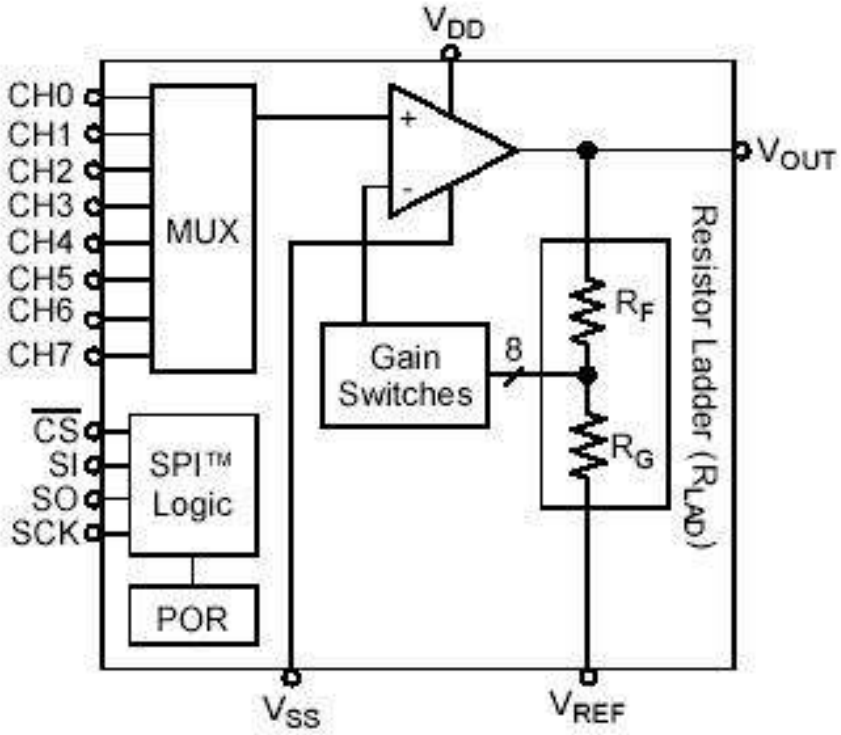

<< BACK

MCP6S91/2/3

Online Datasheet

Features:

- Multiplexed Inputs: 1 or 2 Channels
- 8 Gain Selections:
  +1, +2, +4, +5, +8, +10, +16, or +32 V/V
- Serial Peripheral Interface (SPI)
- Rail-to-Rail Input and Output
- Low Gain Error: ±1% (max.)
- Offset Mismatch Between Channels: 0µV
- High Bandwidth: 1 to 18MHz (typ.)
- Low Noise: 10 nV/√Hz @ 10kHz (typ.)
- Low Supply Current 1.0mA (typ.)
- Single Supply: 2.5V to 5.5V
- Extended Temperature Range: -40°C to +125°C

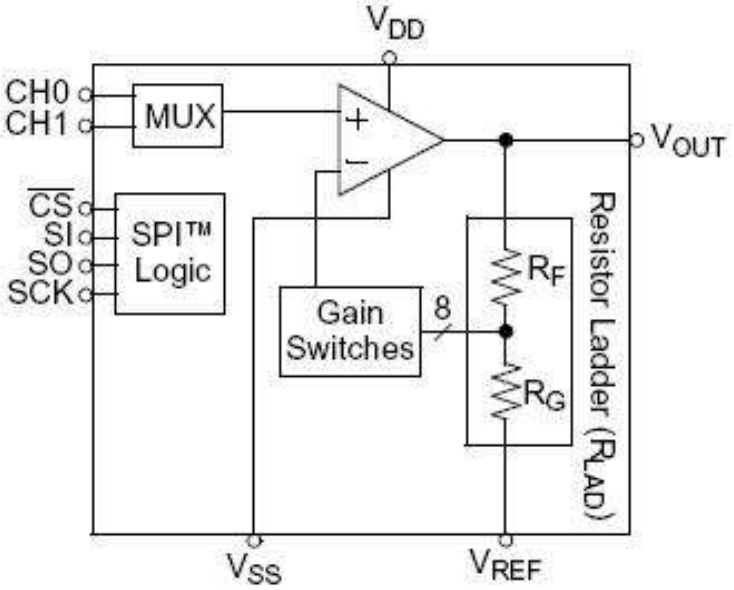

<< BACK

MCP6G01/2/3/4

Online Datasheet

Features:

- 3 Gain Selections:
  +1, +10, +50 V/V
- One Gain Select Input per Amplifier
- Rail-to-Rail Input and Output
- Low Gain Error: ±1% (max.)
- High Bandwidth: 250 to 900kHz (typ.)
- Low Supply Current: 110µA (typ.)
- Single Supply: 1.8V to 5.5V
- Extended Temperature Range: -40°C to +125°C

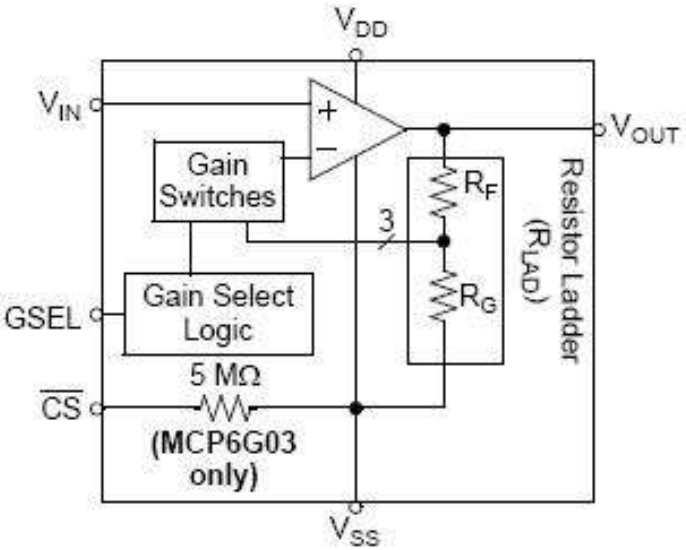

Gain (V/V)	GSEL Voltage (Typ.) (V)
1	$V_{DD}/2$ (or open)
10	0
50	V_{DD}

Note: V_{SS} is assumed to be 0V

<< BACK

MCP6541/2/3/4

Online Datasheet

Features:

- Low Quiescent Current: 600nA/comparator (typ.)
- Rail-to-Rail Input: V_{SS} -0.3V to V_{DD} +0.3V
- CMOS/TTL-Compatible Output
- Propagation Delay: 4µs (typ.), 100mV Overdrive
- Wide Supply Voltage Range: 1.6V to 5.5V
- Available in Single, Dual and Quad
- Single available in SOT-23-5, SC-70-5
- Chip Select (CS) with MCP6543
- Low Switching Current
- Internal Hysteresis: 3.3mV (typ.)
- Temperature Ranges:
  - Industrial: -40°C to +85°C
  - Extended: -40°C to +125°C

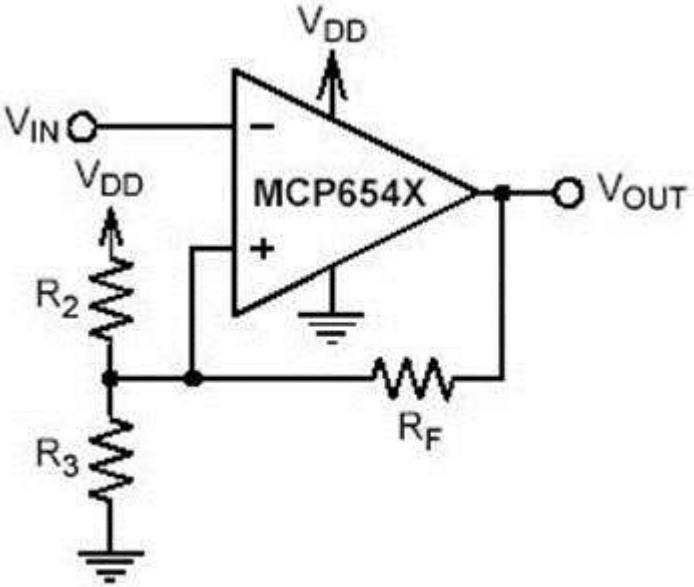

Inverting Circuit With Hysteresis

<< BACK

MCP6546/7/8/9

Online Datasheet

Features:

- Low Quiescent Current: 600nA/comparator (typ.)
- Rail-to-Rail Input: V_{SS} -0.3V to V_{DD} +0.3V
- Open-Drain Output: $V_{OUT} \leq 10V$
- Propagation Delay: 4µs (typ.), 100 mV Overdrive
- Wide Supply Voltage Range: 1.6V to 5.5V
- Single available in SOT-23-5, SC-70-5
- Available in Single, Dual and Quad
- Chip Select (CS) with MCP6548
- Low Switching Current
- Internal Hysteresis: 3.3mV (typ.)
- Temperature Range:
  - Industrial: -40°C to +85°C
  - Extended: -40°C to +125°C

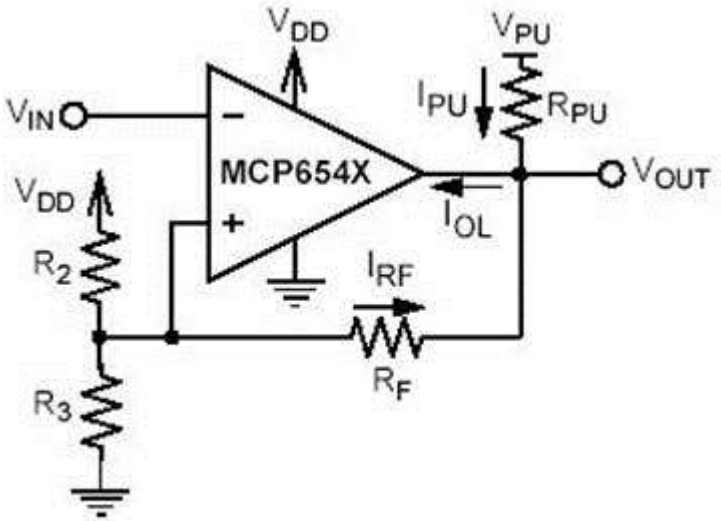

Inverting circuit with hysteresis

<< BACK

MCP65R41/46

Online Datasheet

Features:

- Integrated Reference Voltage
  - Factory Set Reference Voltage: 1.21V or 2.4V
  - Tolerance: ±1% (typ.)
- Low Quiescent Current: 2.5 µA (typ.)
- Propagation Delay: 4µs (typ.), 100mV Overdrive
- Input Offset Voltage: ±3mV (typ.)
- Rail-to-Rail Input: V_{SS} -0.3V to V_{DD} +0.3V
- CMOS/TTL-Compatible Output
- Wide Supply Voltage Range: 1.8V to 5.5V
- Output Options:
  - MCP65R41 Push-Pull
  - MCP65R46 Open-Drain
- SOT-23-6
- Extended Temperature Ranges: -40°C to +125°C

MCP65R41/6
SOT23-6

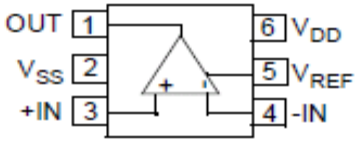

Over Temperature Alert

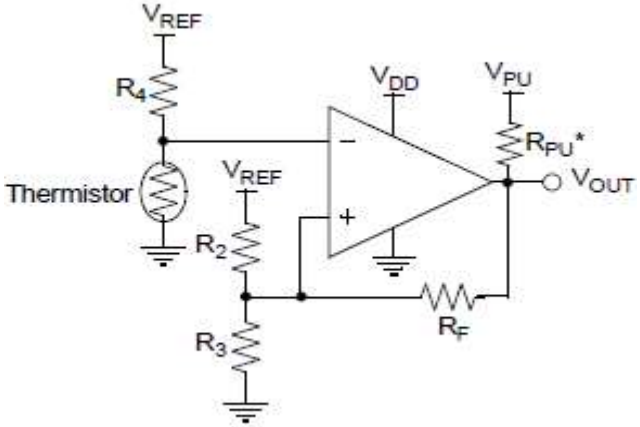

* Pull-up resistor required for the MCP65R46 only.

<< BACK

MCP6561/1R/2/4

Online Datasheet

Features:

- Propagation Delay at $1.8V_{DD}$:
  - 56ns (typ.) High to Low
  - 49ns (typ.) Low to High
- Low Quiescent Current: 100µA (typ.)
- Input Offset Voltage: ±3mV (typ.)
- Rail-to-Rail Input: V_{SS} -0.3V to V_{DD} +0.3V
- CMOS/TTL Compatible Output
- Wide Supply Voltage Range: 1.8V to 5.5V
- Available in Single, Dual, and Quad
- Packages: SC70-5, SOT-23-5, SOIC, MSOP, TSSOP

Typical Application

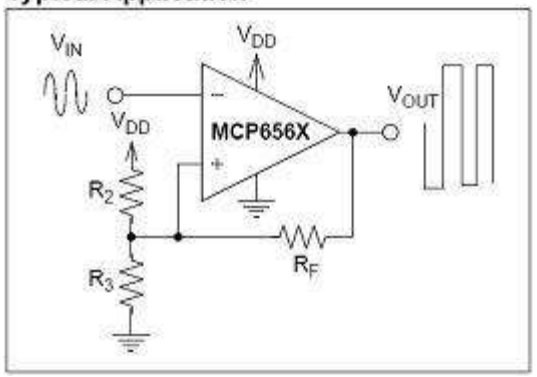

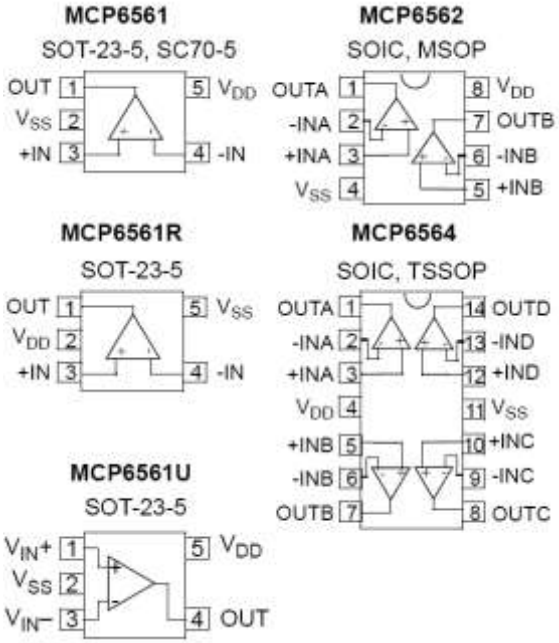

<< BACK

MCP6566/6R/7/9

Online Datasheet

Features:

- Propagation Delay at $1.8V_{DD}$:
  - 56ns (typ.) High to Low
- Low Quiescent Current: 100µA (typ.)
- Input Offset Voltage: ±3mV (typ.)
- Rail-to-Rail Input: V_{SS} -0.3V to V_{DD} +0.3V
- Open-Drain Output
- Wide Supply Voltage Range: 1.8V to 5.5V
- Available in Single, Dual, and Quad
- Packages: SC70, SOT-23-5, SOIC, MSOP, TSSOP

Typical Application

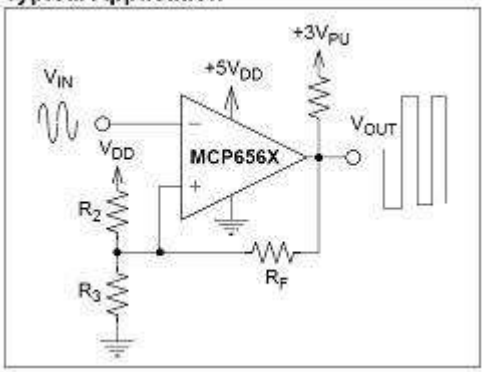

MCP6566
SOT-23-5, SC70-5

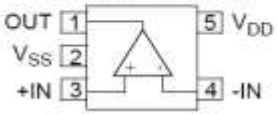

MCP6568
SOIC, MSOP

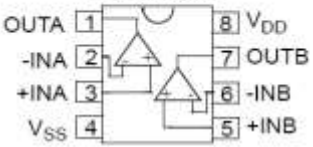

MCP6566R
SOT-23-5

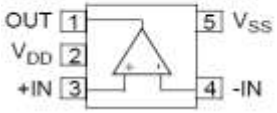

MCP6569
SOIC, TSSOP

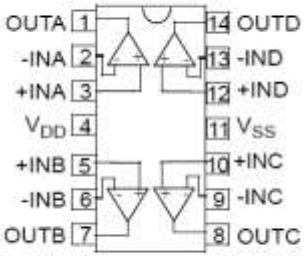

MCP6566U
SOT-23-5

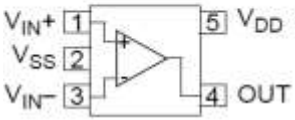

<< BACK

TC1072/3

Online Datasheet

Features:

- 50µA Ground Current for Longer Battery Life
- Very Low Dropout Voltage
- Choice of 50mA (TC1072) and 100mA (TC1073) Output
- High Output Voltage Accuracy
- Standard or Custom Output Voltages
- Power-Saving Shutdown Mode
- ERROR Output Can Be Used as a Low Battery Detector or Processor Reset Generator
- Bypass Input for Low Noise Operation
- Overcurrent and Overtemperature Protection
- Space-Saving 6-Pin SOT-23 Package
- Pin Compatible Upgrades for Bipolar Regulators
- Standard Output Voltage Options: 1.8V, 2.5V, 2.6V, 2.7V, 2.8V, 2.85V, 3.0V, 3.3V, 3.6V, 4.0V, 5.0V
- Other output voltages are available. Please contact Microchip Technology Inc. for details.

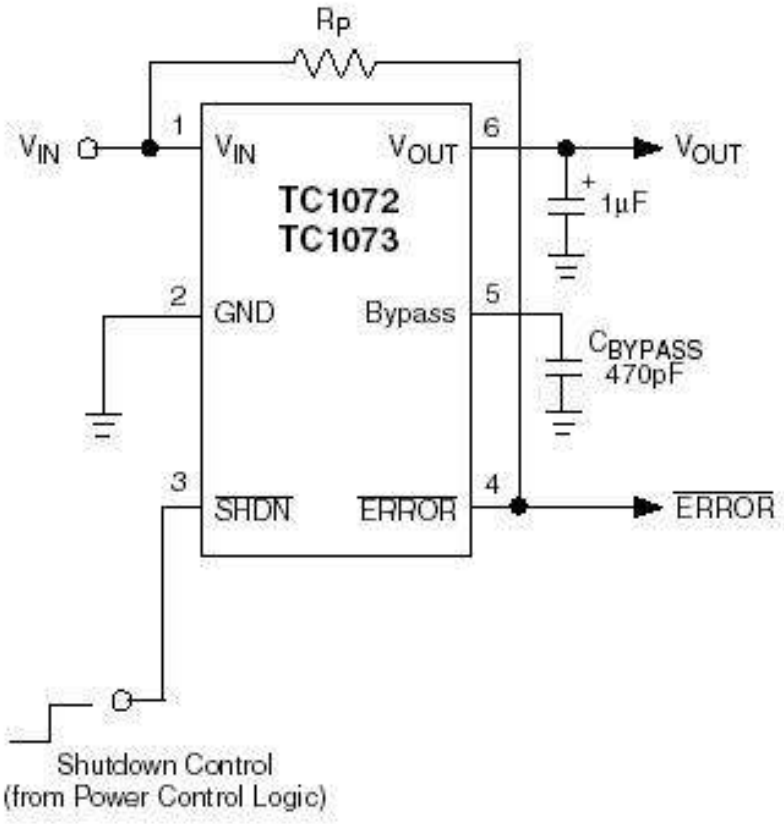

<< BACK

MCP1790/1

Online Datasheet

Features:

- 48V (43.5V ±10%) load dump protected for 180ms with a 30 second repetition rate (FORD Test Pulse G Loaded)
- Wide steady state supply voltage, 6.0V to 30.0V
- Extended Junction Temperature Range: -40°C to +125°C
- Fixed output voltages: 3.0V, 3.3V, 5.0V
- Low quiescent current: 70µA (typ.)
- Low shutdown quiescent current: 10µA (typ.)
- Output Voltage Tolerances of ±2.5% over the temperature range
- Maximum output current of 70mA @ +125°C Junction Temperature
- Maximum continuous input voltage of 30V
- Internal thermal overload protection, +157°C (typ.) Junction Temperature
- Internal short circuit current limit, 120mA (typ.) for +5V option
- Short Circuit Current Foldback
- Shutdown Input option (MCP1791)
- Power Good Output option (MCP1791)
- High PSRR, -90 dB @100Hz (typ.)
- Stable with 1µF to 1000µF tantalum and electrolytic Capacitors
- Stable with 4.7µF to 1000µF ceramic capacitors

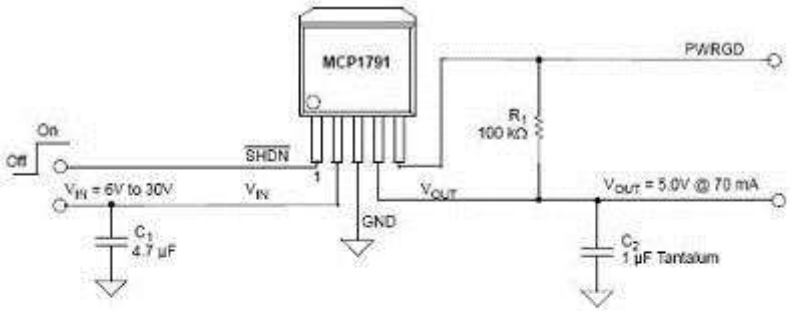

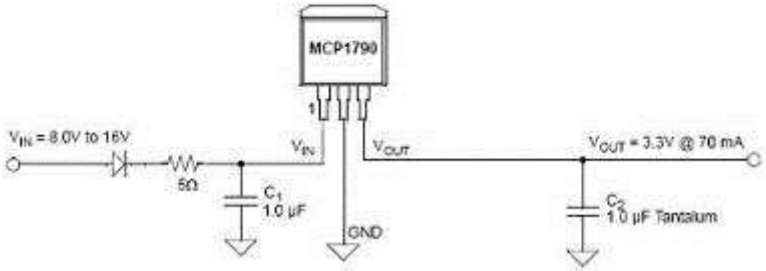

<< BACK

TC1016

Online Datasheet

Features:

- Space-Saving 5-Pin SC-70 Package
- Low Operating Current: 53µA (typ.) Shutdown Mode: 0.05µA (typ.)
- Very Low Dropout Voltage
- Rated 80mA Output Current
- Requires only 1µF Ceramic Output Capacitance
- High Output Voltage Accuracy: ±0.5% (typ.)
- 10µs (typ.) Wake-Up Time from SHDN
- Overcurrent and Overtemperature Protection
- Pin Compatible Upgrades for Bipolar Regulators

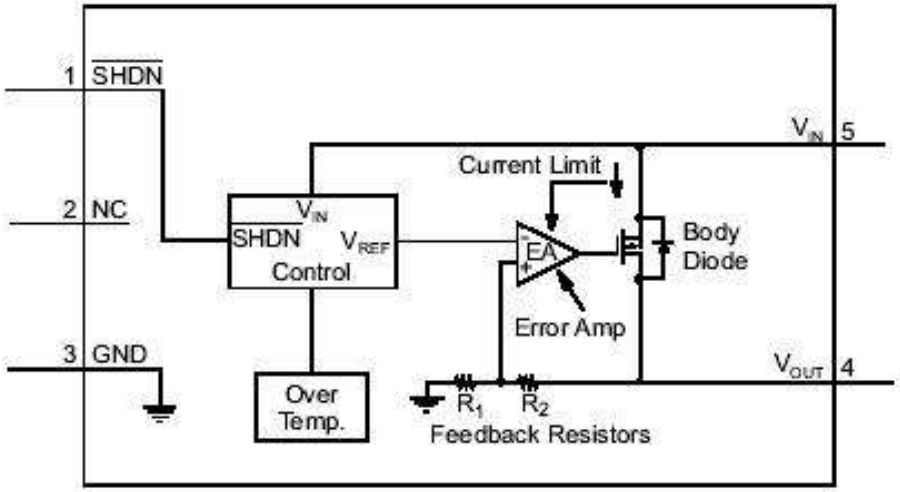

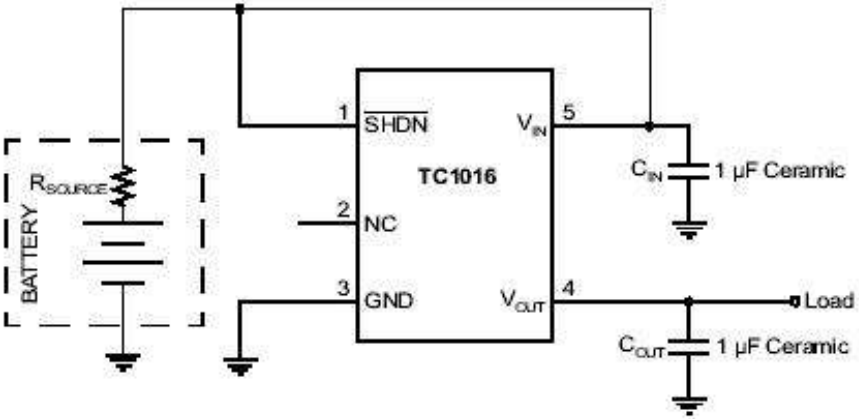

<< BACK

TC2014/54 TC2015/55 TC2185/86 Families

Online Datasheet

Features:

- Output current: 50mA (TC2014/54)
  100mA (TC2015/55)
  150mA (TC2185/6)
- Low Supply Current: 55 µA (typical)
- Low Dropout Voltage: 90 mV (typ.) @ 100 mA
- High-Output Voltage Accuracy: ±0.4% (typ.)
- Standard or Custom Output Voltages
- Power-Saving Shutdown Mode
- Fast Shutdown Response Time: 60µs (typ.)
- Over-current and Over-temperature Protection
- Space-Saving 5-Pin SOT-23A Package
- Stable with Ceramic Output Capacitors
- Wide Operating Temperature Range:
  -40°C to +125°C
- TC2014/054/185: Reference Bypass Input for Ultra Low-Noise Operation
- TC2054/055/186: Error Output Can Be Used as a Low Battery Detector or Microcontroller Reset Generator

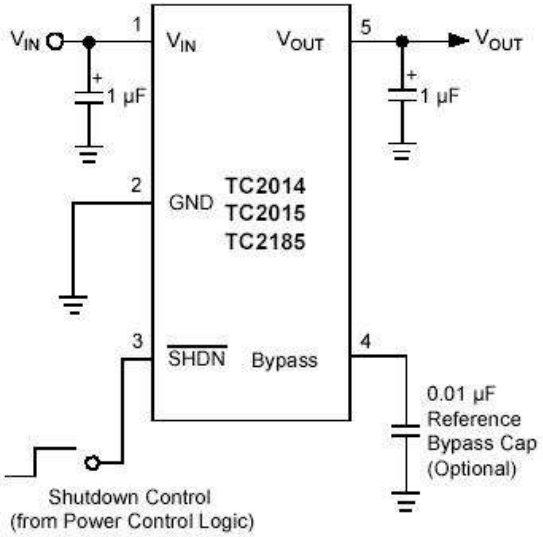

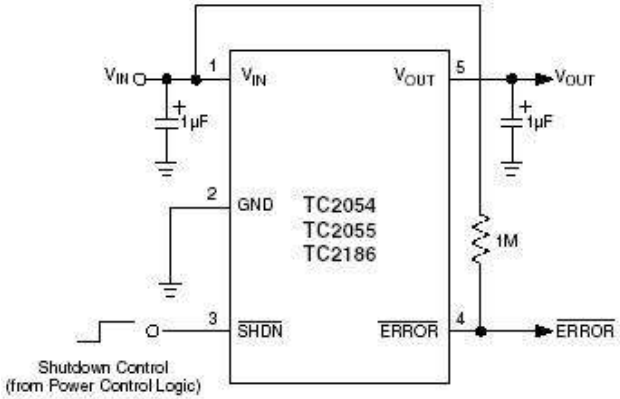

<< BACK

TC1073

Online Datasheet

Features:

- 50µA Ground Current for Longer Battery Life
- Adjustable Output Voltage
- Very Low Dropout Voltage
- Choice of 50mA (TC1070), 100mA (TC1071) and 150mA (TC1187) Output
- Power-Saving Shutdown Mode
- Overcurrent and Overtemperature Protection
- Space-Saving 5-Pin SOT-23 Package
- Pin Compatible with Bipolar Regulators

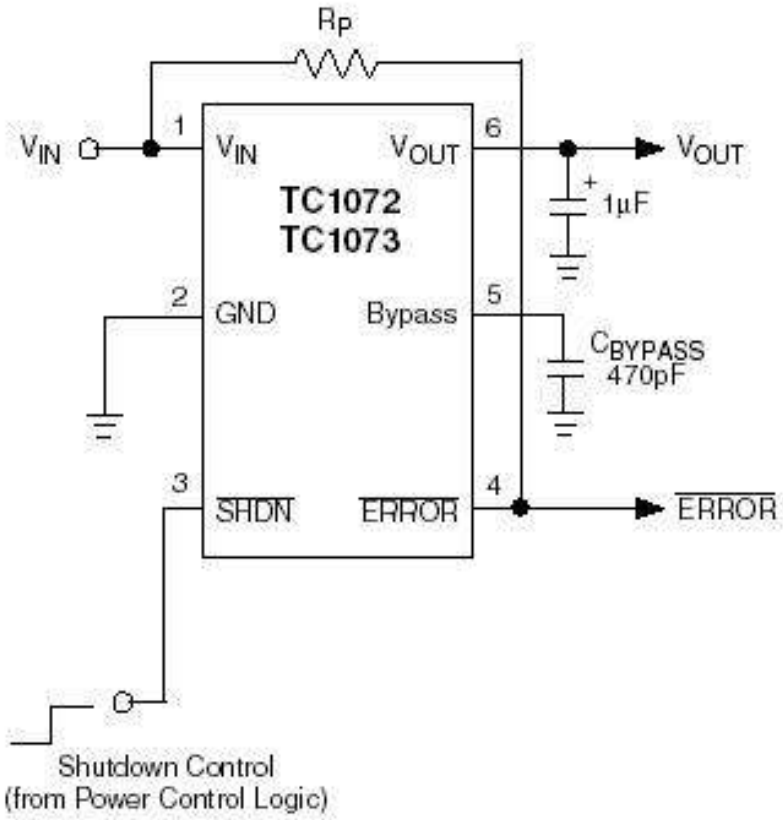

TC1071 >>

<< BACK

TC1223/4

Online Datasheet

Features:

- Low Ground Current for Longer Battery Life
- Low Dropout Voltage
- Choice of 50mA (TC1223), 100mA (TC1224) Output Current
- High Output Voltage Accuracy
- Standard of Custom Output Voltages
- Power Saving Shutdown Mode
- Overcurrent and Overtemperature Protection
- Space-Saving 5-Pin SOT-23A Package
- Pin Compatible Upgrades for Bipolar Regulators

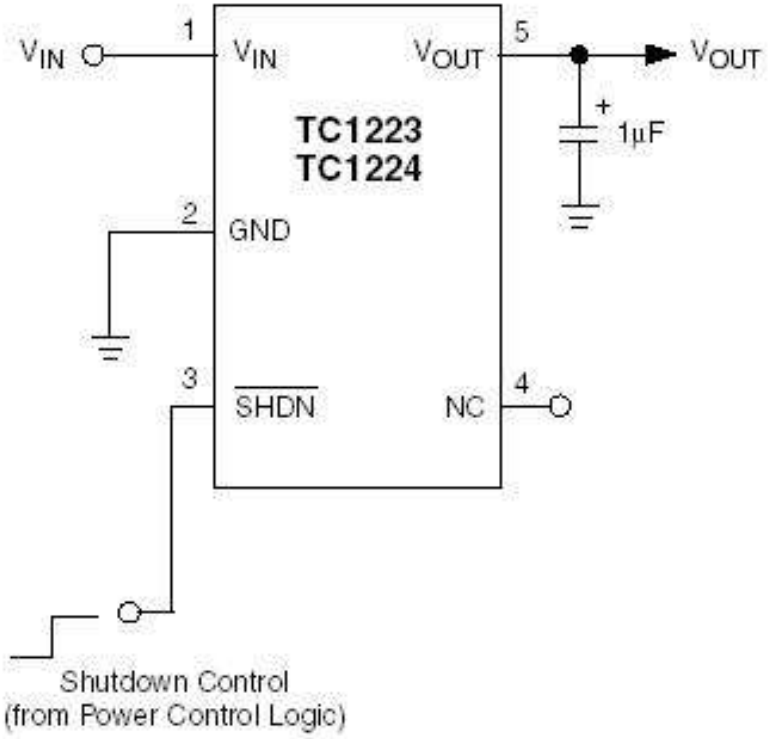

<< BACK

TC1188/9

Online Datasheet

Features:

- Input Voltage Range: 2.7V to 6.0V
- 120mA Output Current
- Low Supply Current: 50µA, (typ.)
- Low Dropout Voltage: 110mV (typ.) @ 100mA
- Fast Turn-On from Shutdown: 140µs (typ.)
- Low Output Noise
- Overcurrent and Overtemperature Protection
- Low Power Shutdown Mode
- Auto Discharge of Output Capacitor (TC1189)

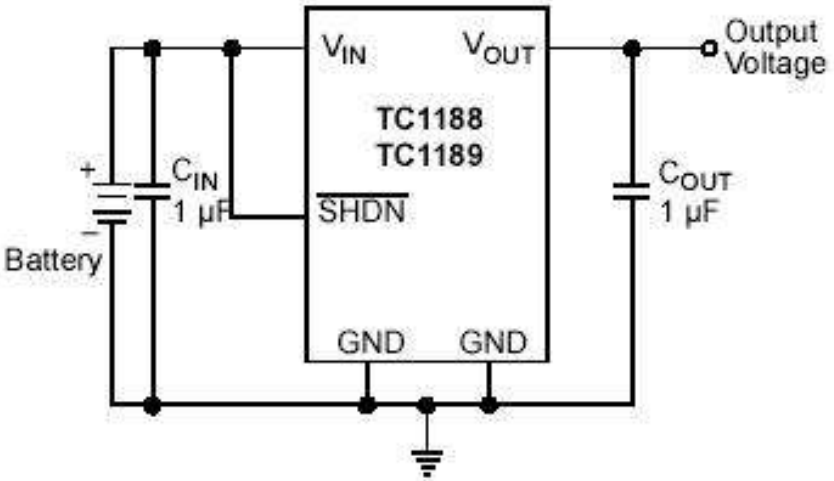

<< BACK

MCP1804

Online Datasheet

Features:

- 150 mA Output Current
- Low Dropout Voltage, 260mV typ. @ 20mA, VR=3.3V
- 50 µA Typical Quiescent Current
- 0.01 µA Typical Shutdown Current
- Input Operating Voltage Range: 2.0V to 28.0V
- Standard Output Voltage Options (1.8V, 2.5V, 3.0V, 3.3V, 5.0V, 10.0V, 12.0V)
- Output Voltage Accuracy: ±2%
- Output voltages from 1.8V to 18.0V in 0.1V increments are available upon request
- Stable with Ceramic output capacitors
- Current Limit Protection With Current Foldback
- Shutdown pin
- High PSRR: 50 dB typical @ 1 kHz

Functional Block Diagram

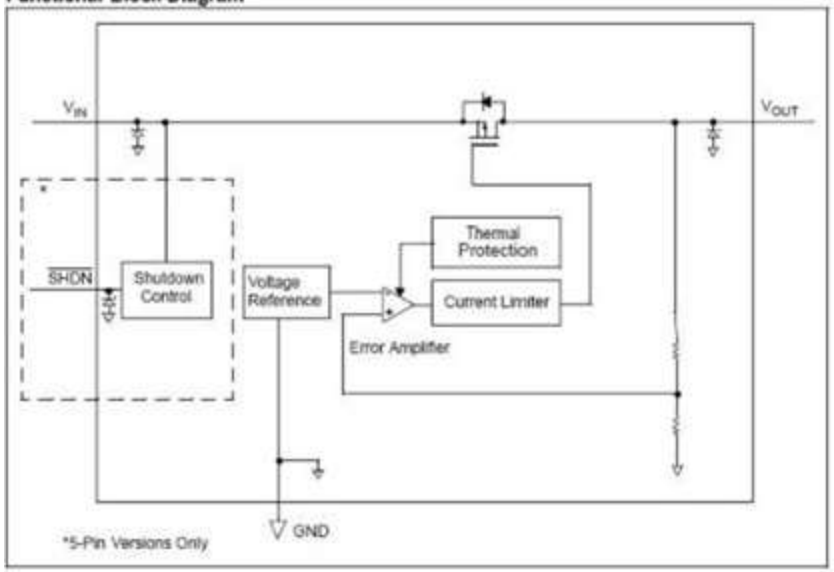

Typical Application Circuit

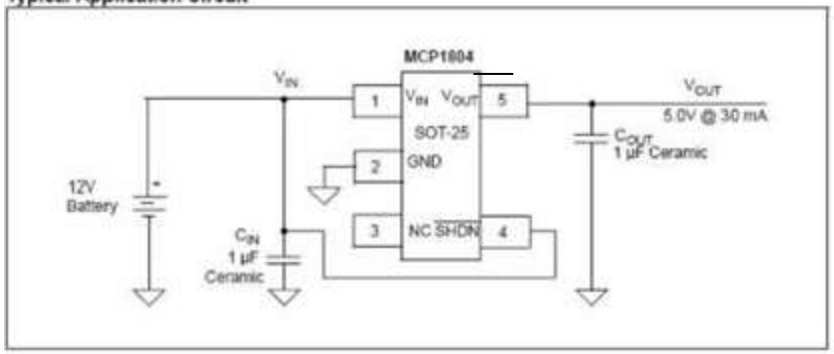

<< BACK

TC1014/54/70 TC1015/55/71 TC1185/6/7 Families

Online Datasheet

Features:

- Low Supply Current: 50µA (typ.)
- Low Dropout Voltage
- Output current: 50mA (TC1014/54/70)
  100mA (TC1015/55/71)
  150mA (TC1185/6/7)
- High Output Voltage Accuracy
- Standard or Custom Output Voltages
- Power-Saving Shutdown Mode
- Overcurrent and
  Overtemperature Protection
- Space-Saving 5-Pin SOT-23 Package
- TC1014/015/185: Reference Bypass Input for
  Ultra Low-Noise Operation
- TC1054/055/1186: Error Output Can Be Used as a
  Low Battery Detector or Microcontroller Reset
Generator
- TC1070/1071/1187: Adjustable Output Voltage

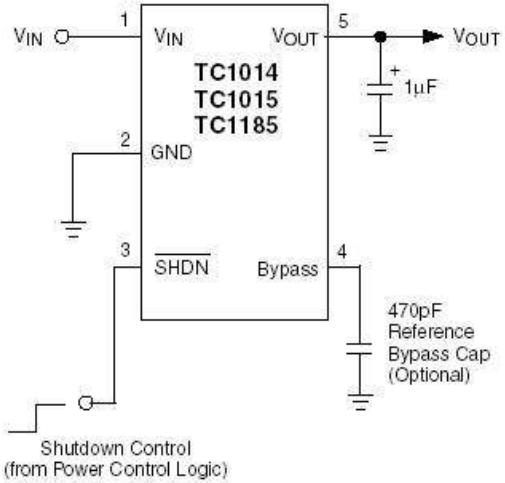

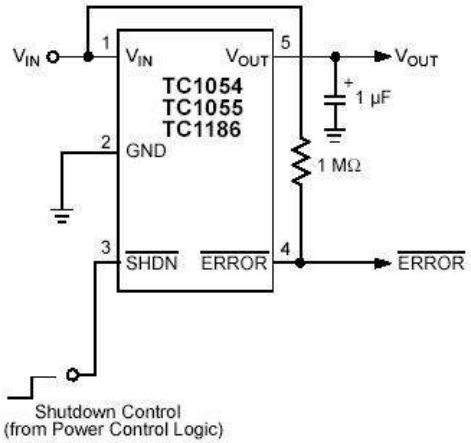

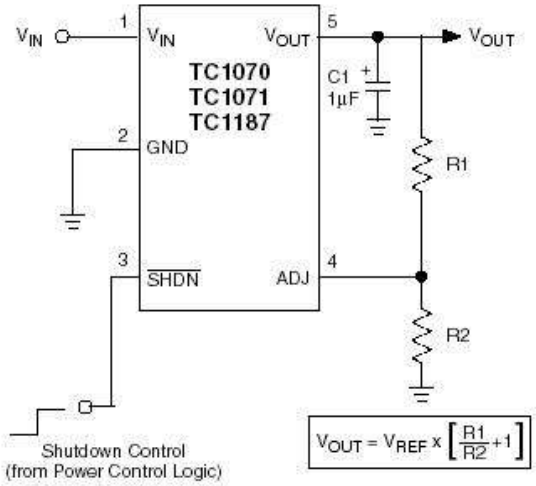

<< BACK

TC1017

Online Datasheet

Features:

- Space Saving 5-Pin SC-70 and SOT-23 Packages
- Low Operating Current: 53µA (typ.) Shutdown Mode: 0.05µA (typ.)
- High Output Voltage Accuracy: ±0.5% (typ.)
- Very Low Dropout Voltage
- Rated 150mA Output Current
- Wake-Up Time from SHDN: 10µs (typ.)
- Overcurrent and Overtemperature Protection
- Pin Compatible Upgrades for Bipolar Regulators
- Requires Only 1µF Ceramic Output Capacitance

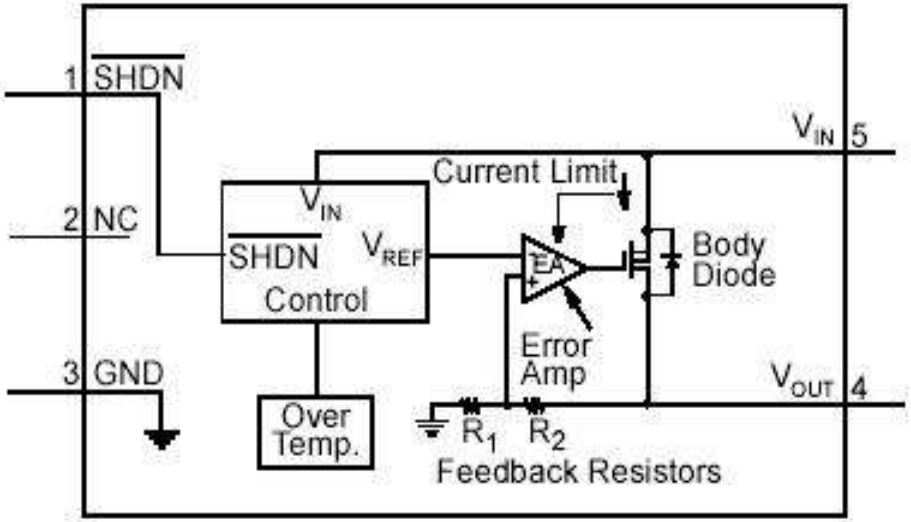

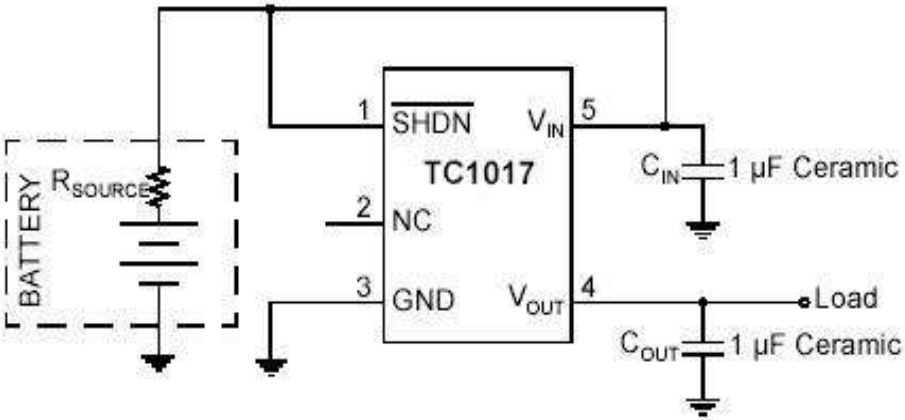

<< BACK

MCP1824/S

Online Datasheet

Features:

- 300mA Output Current Capability
- Input Operating Voltage Range: 2.1V to 6.0V
- Adjustable Output Voltage Range: 0.8V to 5.0V (MCP1824 only)
- Standard Fixed Output Voltages: 0.8V, 1.2V, 1.8V, 2.5V, 3.0V, 3.3V, 5.0V
- Other Fixed Output Voltage Options Available Upon Request
- Low Dropout Voltage: 200mV (typ.) @ 300mA
- Typical Output Voltage Tolerance: 0.4%
- Stable with 1.0µF Ceramic Output Capacitor
- Fast Response to Load Transients
- Low Supply Current: 120µA (typ.)
- Low Shutdown Supply Current: 0.1µA (typ.) (MCP1824 only)
- Fixed Delay on Power Good Output (MCP1824 only)
- Short Circuit Current Limiting and Overtemperature Protection
- 5-Lead Plastic SOT-223, SOT-23 Package Options (MCP1824)
- 3-Lead Plastic SOT-223 Package Option (MCP1824S)

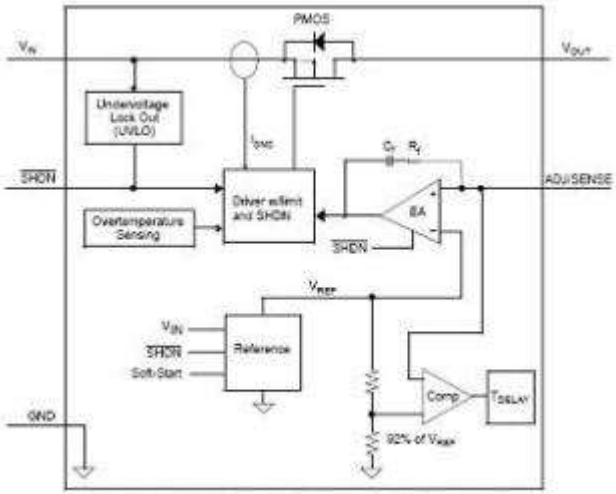

Functional Block Diagram - Adjustable Output (MCP1824)

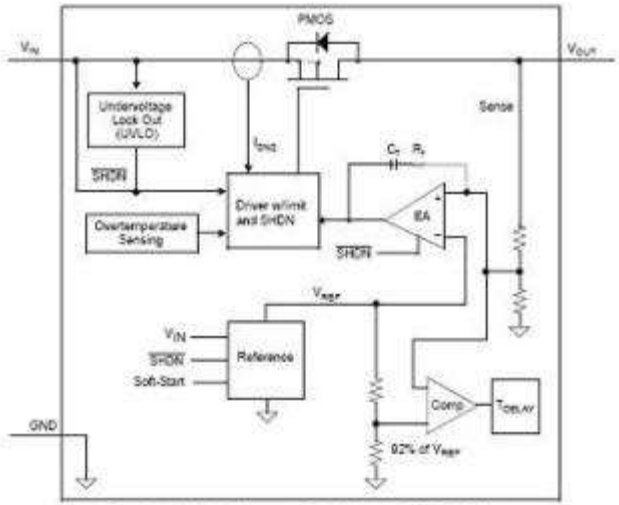

Functional Block Diagram - Fixed Output (MCP1824S)

<< BACK

MCP1825/S

Online Datasheet

Features:

- 500mA Output Current Capability
- Input Operating Voltage Range: 2.1V to 6.0V
- Adjustable Output Voltage Range: 0.8V to 5.0V **(MCP1825 only)**
- Standard Fixed Output Voltages: 0.8V, 1.2V, 1.8V, 2.5V, 3.0V, 3.3V, 5.0V
- Other Fixed Output Voltage Options Available Upon Request
- Low Dropout Voltage: 210mV (typ.) at 500mA
- Typical Output Voltage Tolerance: 0.5%
- Stable with 1.0µF Ceramic Output Capacitor
- Fast response to Load Transients
- Low Supply Current: 120µA (typ.)
- Low Shutdown Supply Current: 0.1µA (typ.) **(MCP1825 only)**
- Fixed Delay on Power Good Output **(MCP1825 only)**
- Short Circuit Current Limiting and Overtemperature Protection
- TO-263-5 (DDPAK-5), TO-220-5, SOT-223-5 Package Options **(MCP1825)**
- TO-263-3 (DDPAK-3), TO-220-3, SOT-223-3 Package Options **(MCP1825S)**

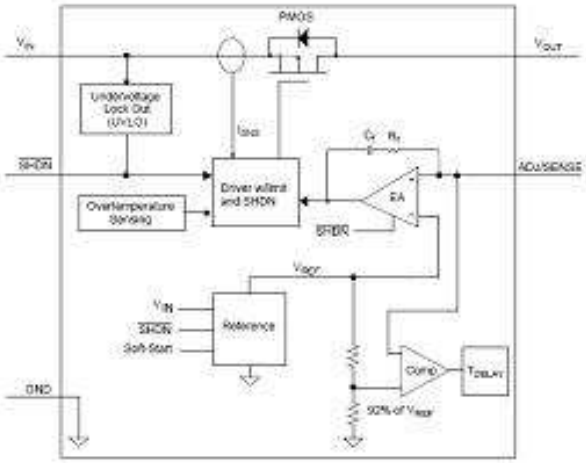

Functional Block Diagram - Adjustable Output

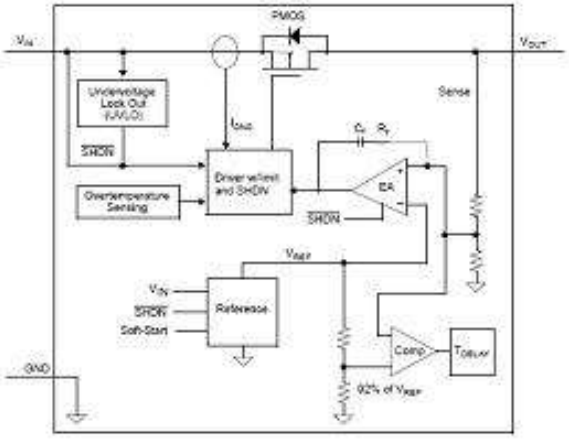

Functional Block Diagram - Fixed Output (3-Pin)

<< BACK

MCP1826/S

Online Datasheet

Features:

- 1000mA Output Current Capability
- Input Operating Voltage Range: 2.3V to 6.0V
- Adjustable Output Voltage Range: 0.8V to 5.0V **(MCP1826 only)**
- Standard Fixed Output Voltages: 0.8V, 1.2V, 1.8V, 2.5V, 3.0V, 3.3V, 5.0V
- Other Fixed Output Voltage Options Available Upon Request
- Low Dropout Voltage: 250mV (typ.) @ 1000mA
- Typical Output Voltage Tolerance: 0.5%
- Stable with 1.0µF Ceramic Output Capacitor
- Fast response to Load Transients
- Low Supply Current: 120µA (typ.)
- Low Shutdown Supply Current: 0.1µA (typ.) **(MCP1826 only)**
- Fixed Delay on Power Good Output **(MCP1826 only)**
- Short Circuit Current Limiting and Overtemperature Protection
- TO-263-5 (DDPAK-5), TO-220-5, SOT-223-5 Package Options **(MCP1826).**
- TO-263-3 (DDPAK-3), TO-220-3, SOT-223-3 Package Options **(MCP1826S).**

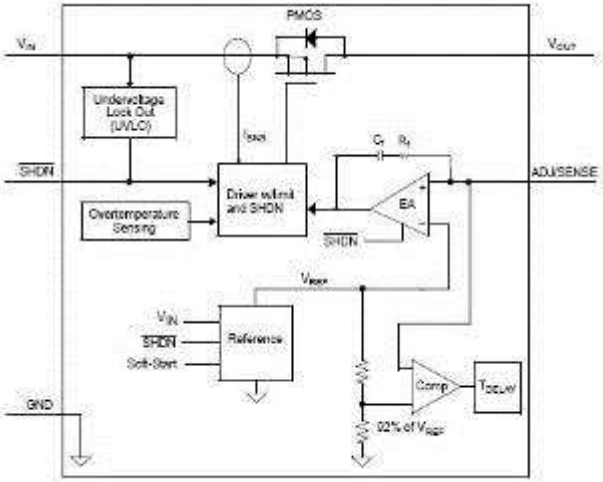

Functional Block Diagram - Adjustable Output

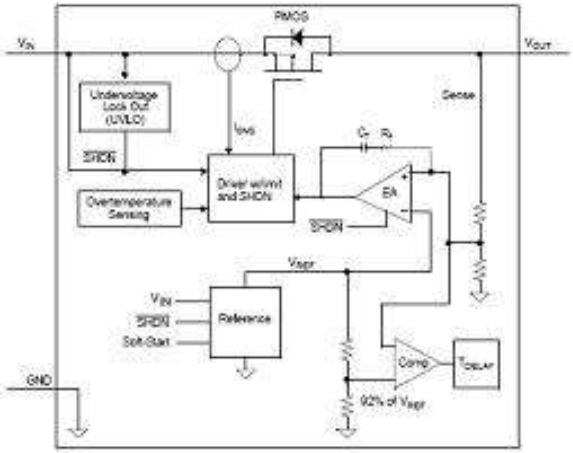

Functional Block Diagram - Fixed Output (3-Pin)

<< BACK

MCP1700

Online Datasheet

Features:

- 1.6µA (typ.) Quiescent Current
- Input Operating Voltage Range: 2.3V to 6.0V
- Output Voltage Range: 1.2V to 5.0V
- 250mA Output Current for Output Voltages ≥ 2.5V
- 200mA Output Current for Output Voltages < 2.5V
- Low Dropout voltage:178mV (typ.) @ 250mA for V_{OUT} = 2.8V
- 0.4% (typ.) Output Voltage Tolerance
- Stable with 1.0µF Ceramic Output Capacitor
- Short Circuit Protection
- Overtemperature Protection

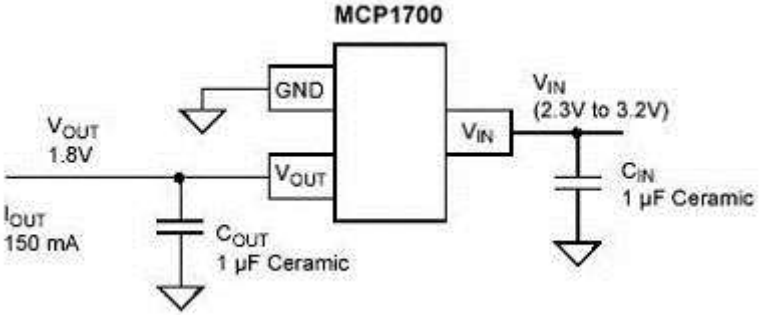

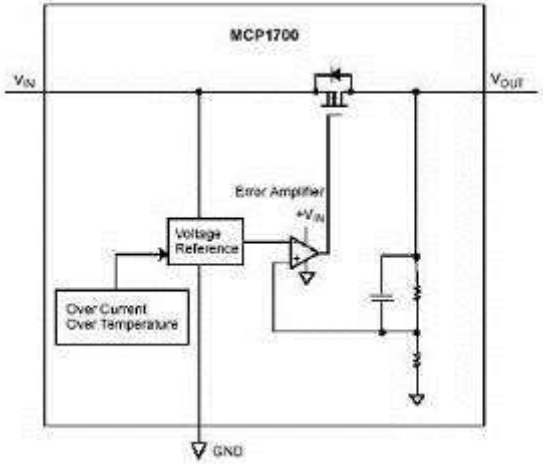

<< BACK

MCP1702

Online Datasheet

Features:

- 2.0µA Quiescent Current (typ.)
- Input Operating Voltage Range: 2.7V to 13.2V
- 250mA Output Current for Output Voltages ≥ 2.5V
- 200mA Output Current for Output Voltages < 2.5V
- Output voltage range 1.2V to 5.5V in 0.1V increments (50mV increments available upon request)
- Stable with 1.0µF to 22µF Output Capacitor
- Short-Circuit Protection
- Overtemperature Protection
- Package Options: 3-Pin SOT-23A, 3-Pin SOT-89,TO-92-3

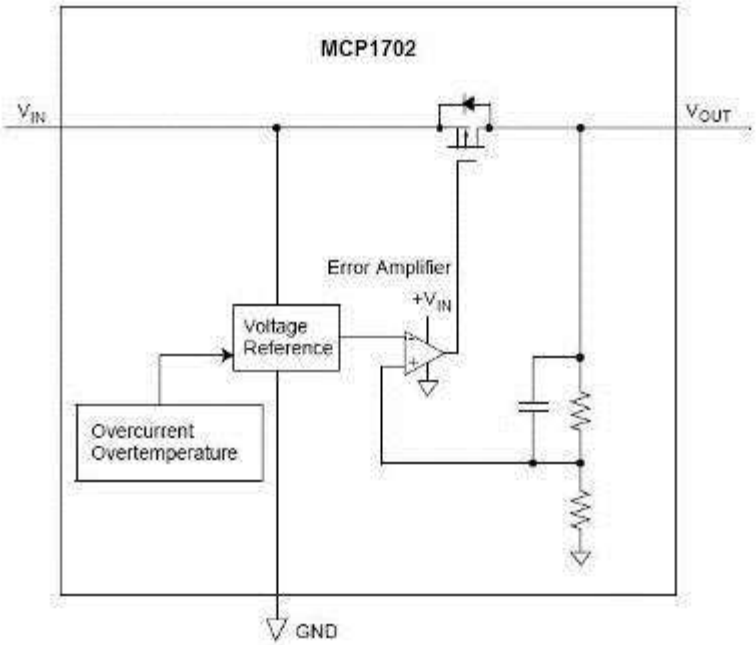

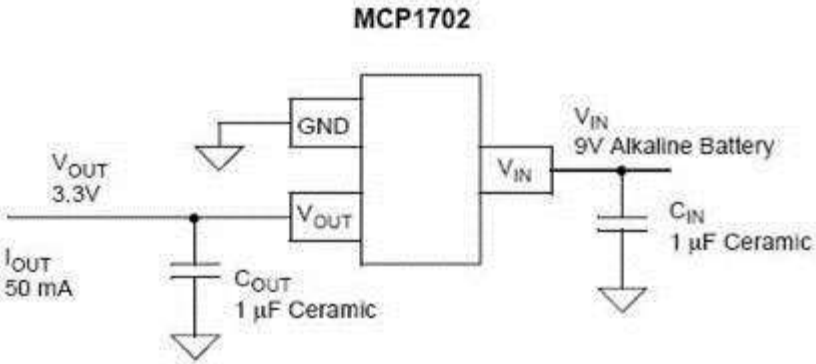

<< BACK

MCP1703A

Online Datasheet

Features:

- 2.0µA Quiescent Current (typ.)
- Input Operating Voltage Range: 2.7V to 16V
- 250mA Output Current for Output Voltages ≥ 2.5V
- 200mA Output Current for Output Voltages < 2.5V
- 0.4% (typ.) Output Voltage Tolerance
- Output voltage range 1.2V to 5.5V in 0.1V increments (50mV increments available upon request)
- Stable with 1.0µF to 22µF Output Capacitor
- Short-Circuit Protection
- Overtemperature Protection
- Package Options: 3-Pin SOT-23A, 3-Pin SOT-89,TO-92-3, 2x3 DFN

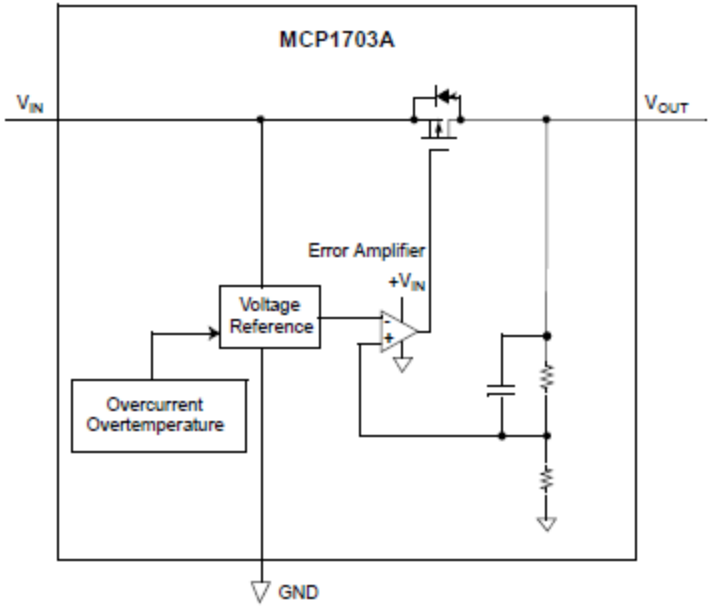

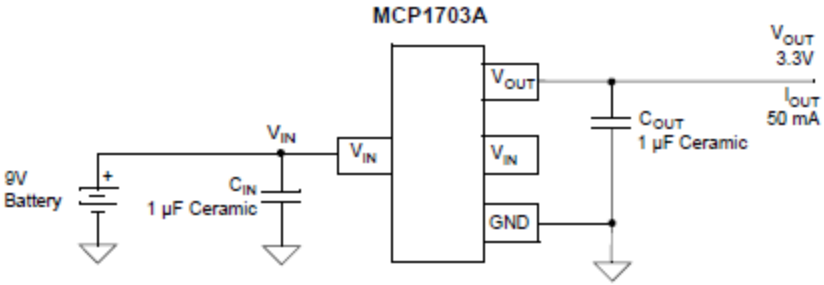

<< BACK

MCP1711

Online Datasheet

Features:

- Ultra-Low Quiescent Current: 600 nA (typ)
- Shutdown Supply Current: 10 nA (typ)
- Input Operating Voltage Range: 1.4V to 6.0V
- 150 mA Output Current Capability
- Output Capacitor:
  - Low Equivalent Series Resistance (ESR)
  - or Capacitorless Compatible
- Low Dropout Voltage:
  450 mV Maximum at 200 mA
- Stable with 1.0 µF Ceramic Output Capacitor
- Protection Circuits:
  - Current Limiter, Short Circuit, Foldback
- Space Saving 4L 1x1 DFN and 5L SOT-23

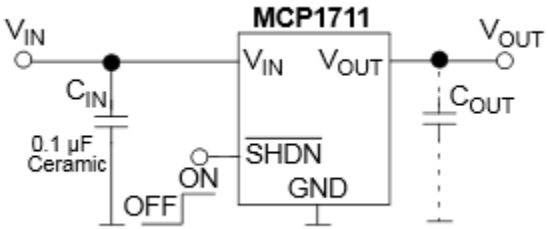

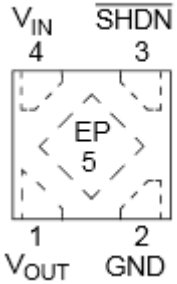

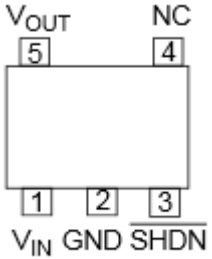

<< BACK

MCP1754/S

Online Datasheet

Features:

- High PSRR: >70 dB @ 1 kHz typical
- 56.0 µA Typical Quiescent Current
- Input Operating Voltage Range: 3.6V to16.0V
- 150 mA Output Current
- Low Dropout Voltage, 300 mV Typical @ 150 mA
- 0.4% Typical Output Voltage Tolerance
- Standard Output Voltage Options (1.8V, 2.5V, 2.8V, 3.0V, 3.3V, 4.0V, 5.0V)
- Output Voltage Range 1.8V to 5.5V in 0.1V increments
- Output Voltage Tolerances of ±2.0% Over Temperature
- Stable with Minimum 1.0 µF Output Capacitance
- Power Good Output
- Shutdown Input
- True Current Foldback Protection
- Short-Circuit Protection
- Overtemperature Protection

Package Options:

3-pin SOT-23A, SOT-89, SOT-223, 2x3 DFN-8 (MCP1754S)

5-pin SOT-23, SOT-223, and 2x3 DFN-8

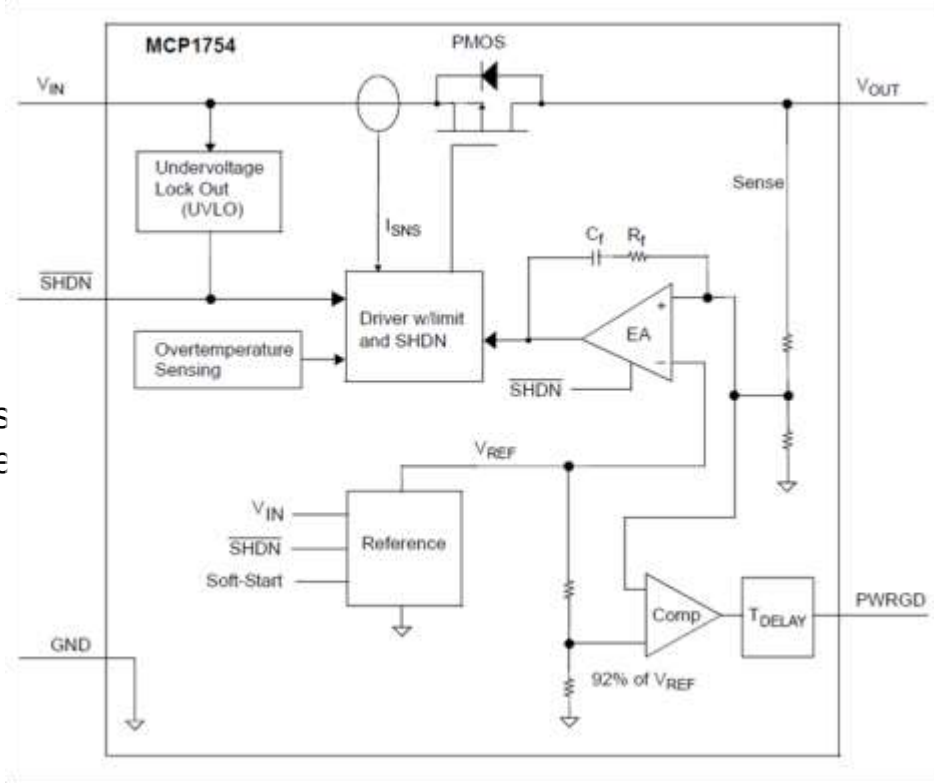

<< BACK

MCP1755/S

Online Datasheet

Features:

- High PSRR: >70 dB @ 1 kHz typical
- 68.0 µA Typical Quiescent Current
- Input Operating Voltage Range: 3.6V to16.0V
- 300 mA Output Current
- Low Dropout Voltage, 300 mV Typical @ 300 mA
- 0.85% Typical Output Voltage Tolerance
- Standard Output Voltage Options (1.8V, 2.5V, 2.8V, 3.0V, 3.3V, 4.0V, 5.0V)
- Output Voltage Range 1.8V to 5.5V in 0.1V increments
- Output Voltage Tolerances of ±2.0% Over Temperature
- Stable with Minimum 1.0 µF Output Capacitance
- Power Good Output
- Shutdown Input
- True Current Foldback Protection
- Short-Circuit Protection
- Overtemperature Protection
- Package Options:

3-pin SOT-223, 8-lead 2x3 (MCP1755S)
5-pin SOT-23, SOT-223, and 8-lead 2x3 DFN (MCP1755)

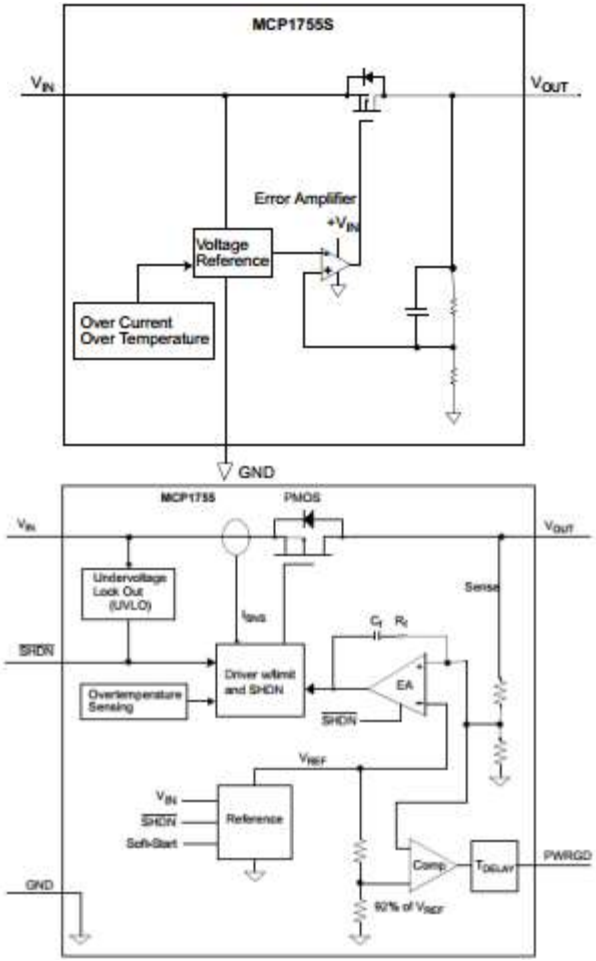

<< BACK

TC1107/8

Online Datasheet

Features:

- Extremely Low Supply Current: 50µA (typ.)
- Very Low Dropout Voltage
- 300mA Output Current
- High Output Voltage Accuracy
- Standard or Custom Output Voltages
- Overcurrent and Overtemperature Protection
- Power Saving Shutdown Mode (TC1107)
- Bypass Input for Ultra-Quiet Operation (TC1107)
- TC1107: 8L SOIC, MSOP
- TC1108: 3L SOT-223

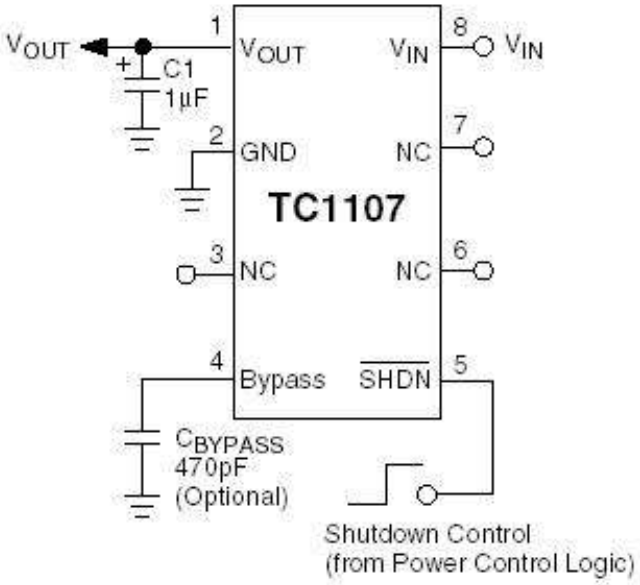

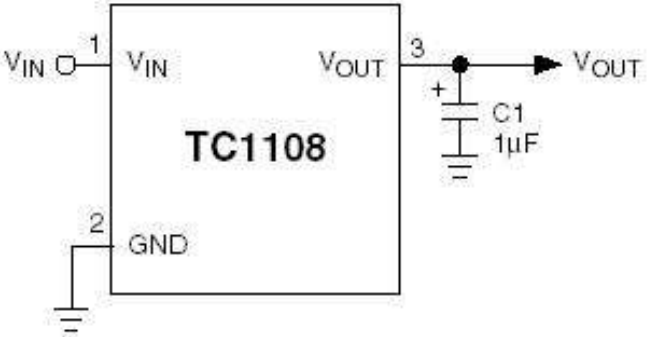

<< BACK

TC1108

Online Datasheet

Features:

- Extremely Low Supply Current: 50µA (typ.)
- Very Low Dropout Voltage
- 300mA Output Current
- High Output Voltage Accuracy
- Standard or Custom Output Voltages
- Overcurrent and Overtemperature Protection

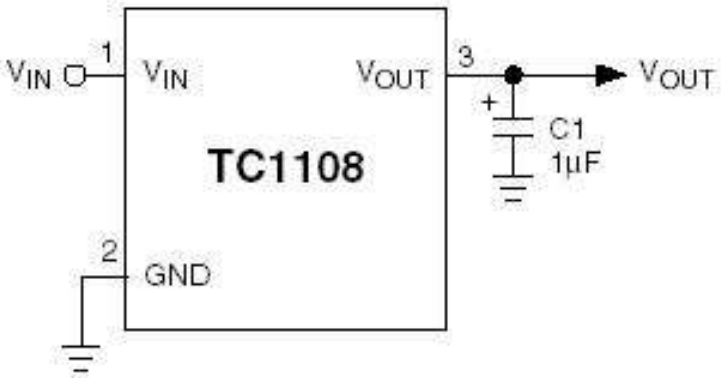

TC1107 >>

<< BACK

TC1173/4

Online Datasheet

Features:

- Extremely Low Supply Current
- Very Low Dropout Voltage
- 300mA Output Current
- Bypass Input for Ultra-Quiet Operation
- Standard or Custom Output Voltages
- Overcurrent and Overtemperature Protection
- ERROR Output can be used as a Low Battery Detector or Processor Reset Generator (TC1173)
- Shutdown Mode (TC1173)
- Packages: 8L SOIC, 8L MSOP

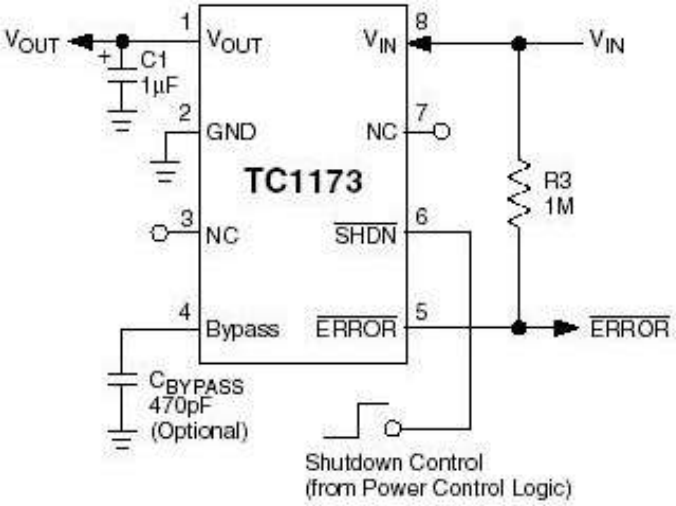

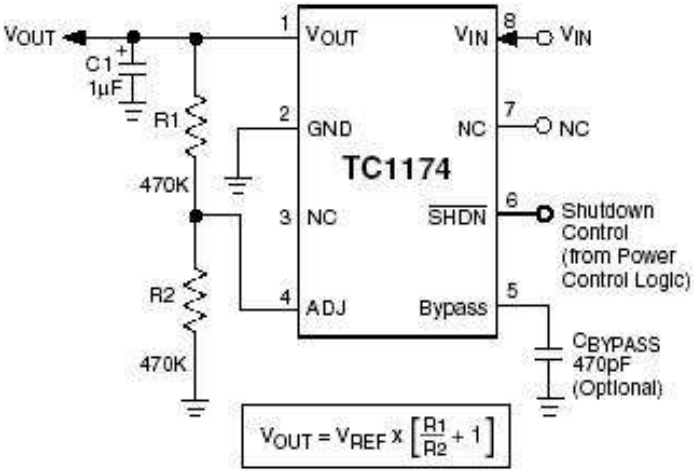

<< BACK

TC1174

Online Datasheet

Features:

- Extremely Low Supply Current: 50µA (typ.)
- Very Low Dropout Voltage
- 300mA Output Current
- Adjustable Output Voltage
- Power Saving Shutdown Mode
- Bypass Input for Ultra-Quiet Operation
- Overcurrent and Overtemperature Protection
- Space Saving MSOP Package Option

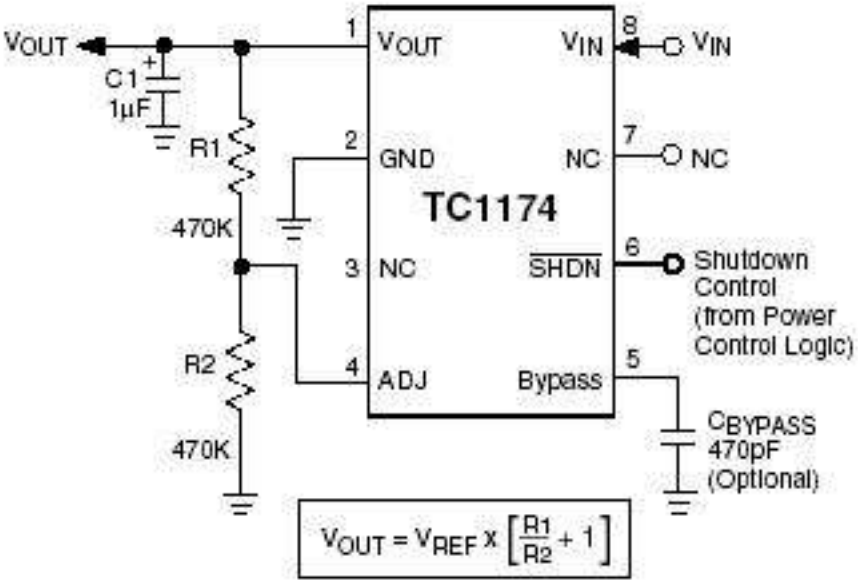

TC1173 >>

<< BACK

TC1269

Online Datasheet

Features:

- Very Low Ground Current for Longer Battery Life
- Very Low Dropout Voltage
- 300mA Output Circuit
- High Output Voltage Accuracy
- Standard or Custom Output Voltages
- Power Saving Shutdown Mode
- Bypass Input for Ultra-Quiet Operation
- Over Current and Over Temperature Protection
- Space-Saving MSOP Package

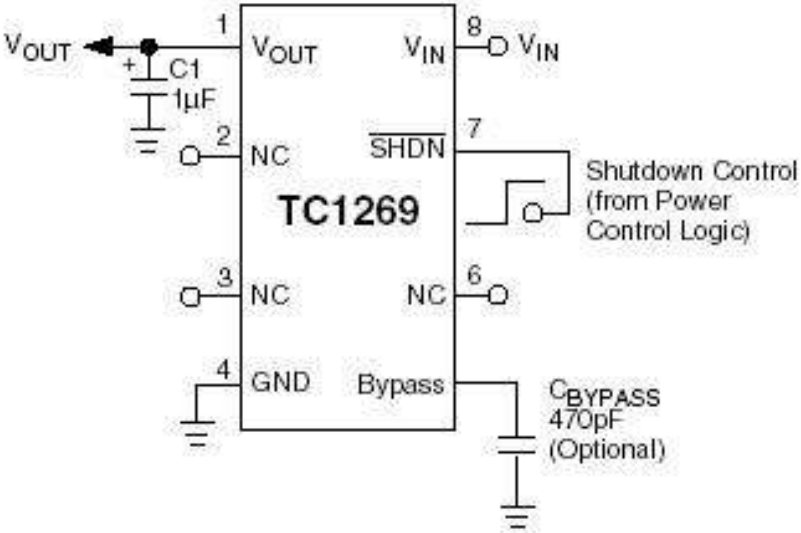

<< BACK

MCP1725

Online Datasheet

Features:

- 500mA Output Current Capability
- Input Operating Voltage Range: 2.3V to 6.0V
- Adjustable Output Voltage Range: 0.8V to 5.0V
- Standard Fixed Output Voltages:
  0.8V, 1.2V, 1.8V, 2.5V, 3.0V, 3.3V, 5.0V
- Other Fixed Output Voltage Options Available Upon Request
- Low Dropout Voltage: 210mV (typ.) @ 500mA
- Output Voltage Tolerance: 0.5% (typ.)
- Stable with 1.0µF Ceramic Output Capacitor
- Low Supply Current: 120µA (typ.)
  - Shutdown Current: 0.1 µA (typ)
- Adjustable Delay on Power Good Output
- Short Circuit Current Limiting and Overtemperature Protection
- Small Packaging: 2x3 DFN-8 and SOIC-8 Packages

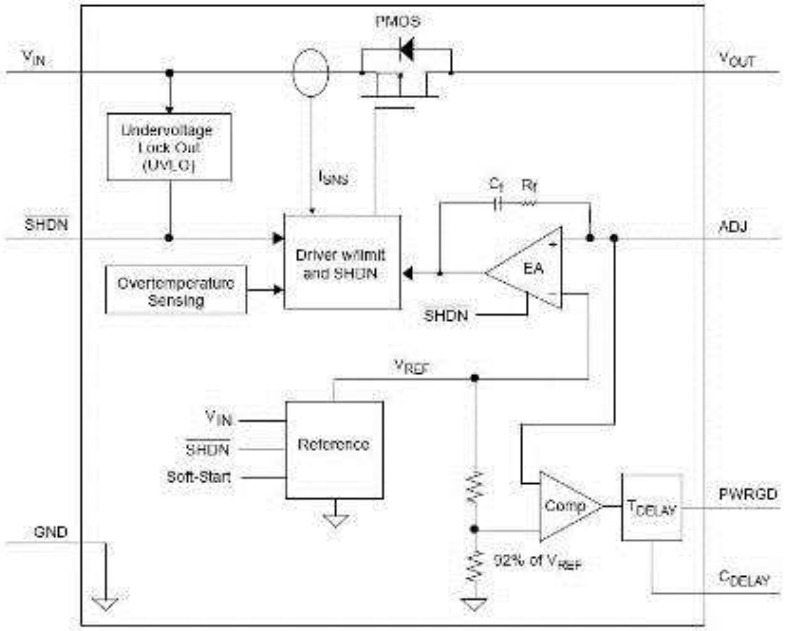

MCP1726 Adjustable Output Voltage

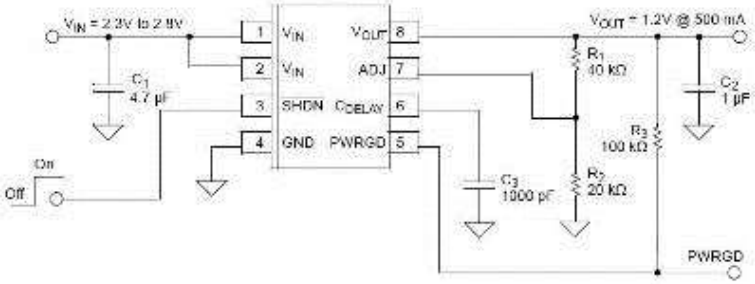

<< BACK

TC1262/3

Online Datasheet

Features:

- Very Low Dropout Voltage
- 500mA Output Current
- High Output Voltage Accuracy
- Standard or Custom Output Voltages
- Overcurrent Protection
- Overtemperature Protection
- Shutdown Mode (TC1263)
- ERROR Output can be used as a Low Battery Detector (SOIC only, TC1263)

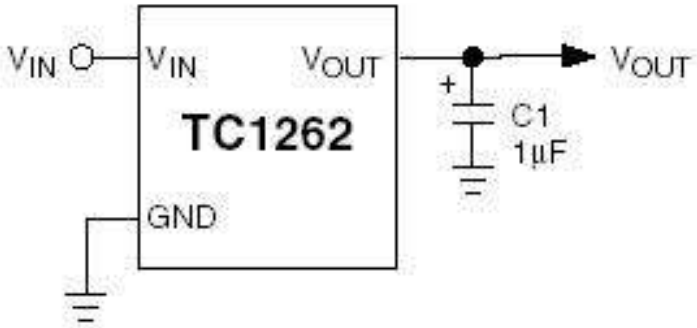

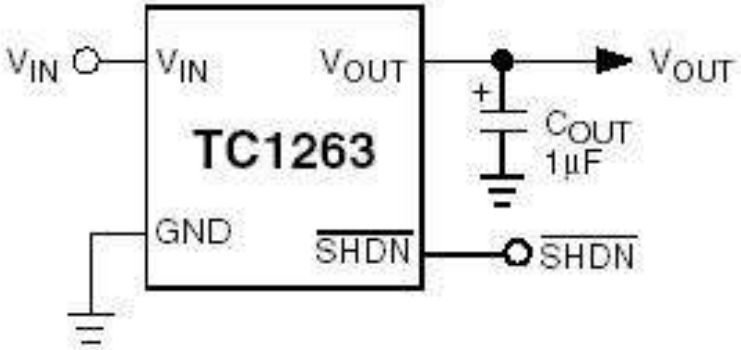

<< BACK

TC1264/5

Online Datasheet

Features:

- Very Low Dropout Voltage
- 800mA Output Current
- High Output Voltage Accuracy
- Standard or Custom Output Voltages
- Overcurrent
- Overtemperature Protection
- SHDN Input for Active Power Management (TC1265)
- ERROR Output to Detect Low Battery (SOIC only, TC1265)

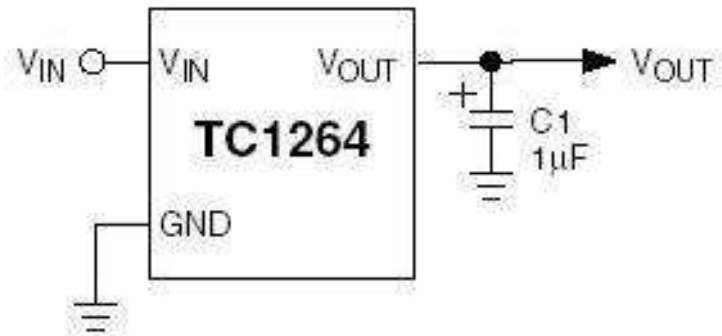

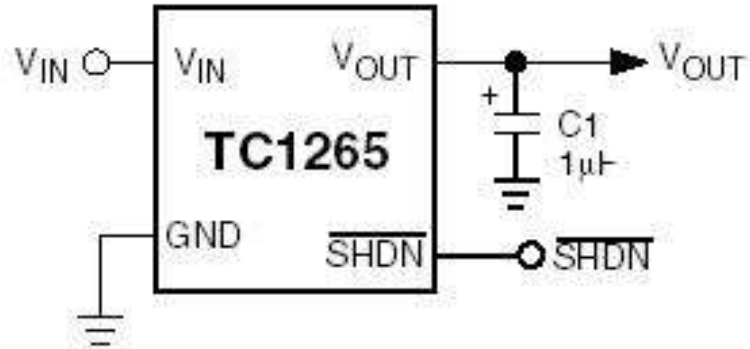

<< BACK

TC2117

Online Datasheet

Features:

- Very Low Dropout Voltage
- 800mA Output Current
- High Output Voltage Accuracy
- Standard or Custom Output Voltages
- Overcurrent and Overtemperature Protection
- Space Saving SOT-223 Package
- Fixed Output Voltages: 1.8V, 2.5V, 3.0V, 3.3V

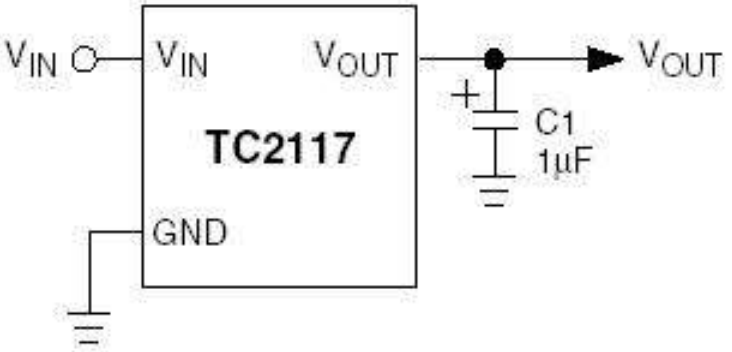

<< BACK

MCP1726

Online Datasheet

Features:

- 1A Output Current Capability
- Input Operating Voltage Range: 2.3V to 6.0V
- Adjustable Output Voltage Range: 0.8V to 5.0V
- Standard Fixed Output Voltages: 0.8V, 1.2V, 1.8V, 2.5V, 3.0V, 3.3V, 5.0V
- Low Dropout Voltage: 220mV (typ.) @ 1A
- Output Voltage Tolerance: 0.4% (typ.)
- Stable with 1.0µF Ceramic Output Capacitor
- Fast response to Load Transients
- Low Supply Current: 140µA (typ.)
    - Shutdown Current: 0.1 µA (typ)
- Adjustable Delay on Power Good Output
- Short Circuit Current Limiting and Overtemperature Protection
- 3x3 DFN-8 and SOIC-8 Package Options

MCP1726 Fixed Output Voltage

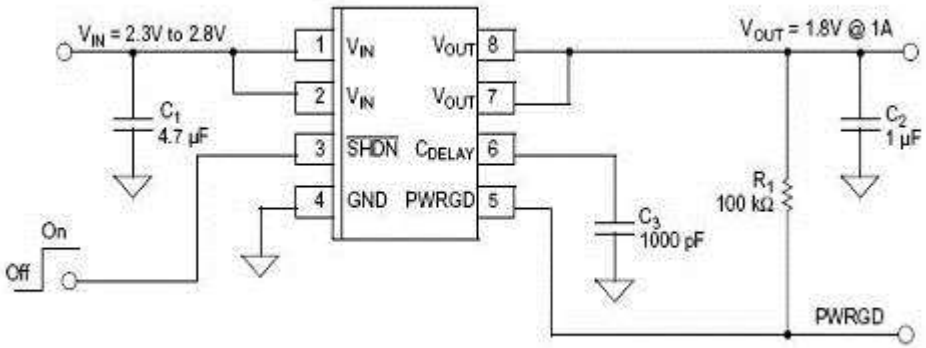

MCP1726 Adjustable Output Voltage

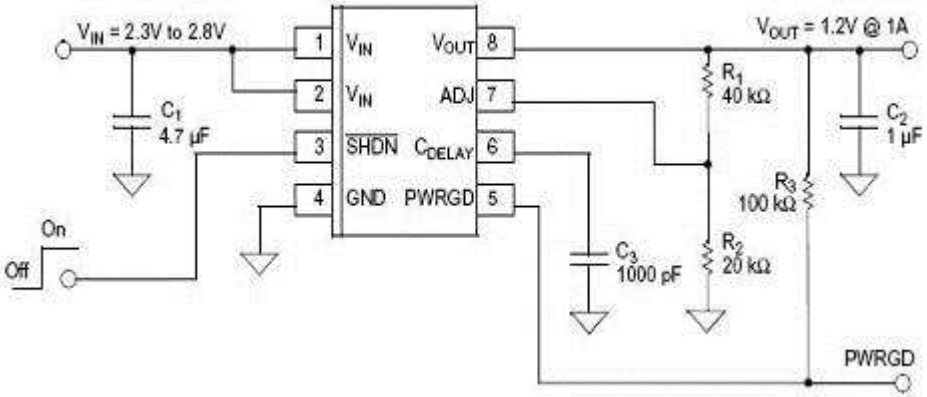

<< BACK

MCP1727

Online Datasheet

Features:

- Up to 1.5A output load current
- Low Dropout Voltage: 330mV (typ.) @ 1.5A
- Output voltage from 0.8V to 5.0V, both fixed and adjustable
- Stable with 1.0µF ceramic output capacitor
- Output Voltage Tolerance: 0.5% (typ.)
- Power good output with adjustable delay
- Low supply current: 140µA (typ.)
    - Shutdown Current: 0.1 µA (typ)
- Short Circuit Current Limiting and Overtemperature Protection
- DFN-8 3x3 and SOIC-8 Pb-free packages

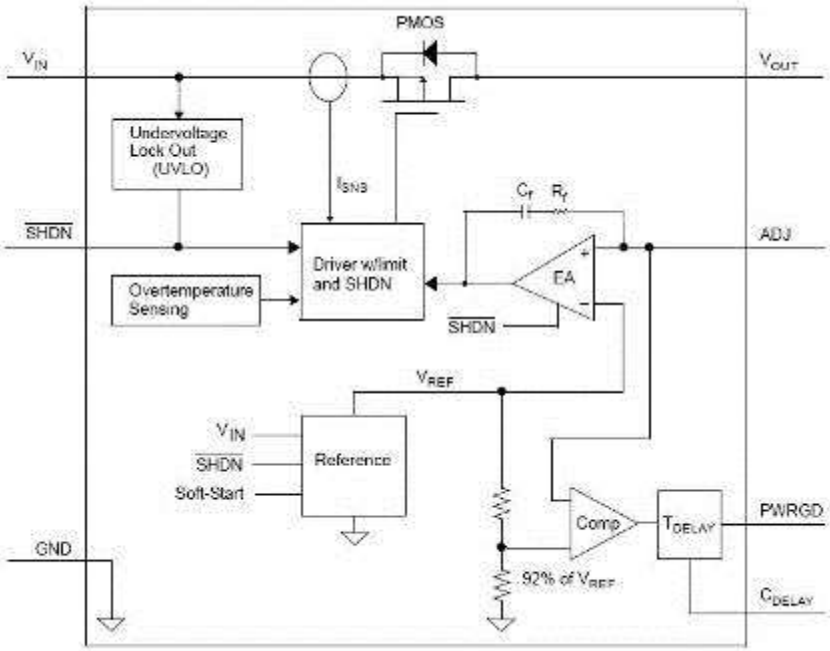

MCP1727 Adjustable Output Voltage

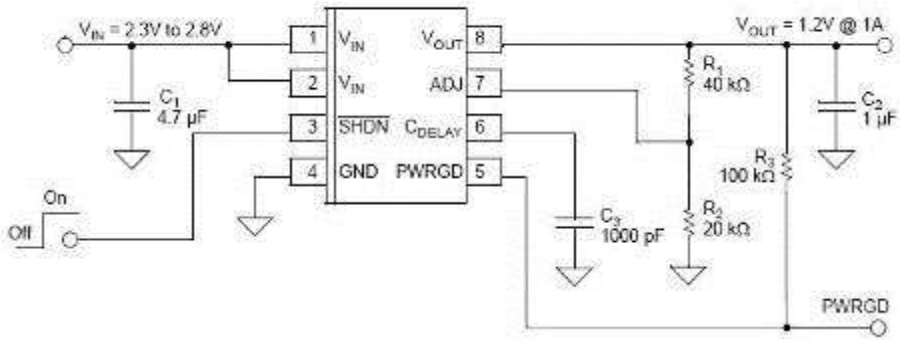

<< BACK

MCP1827/S

Online Datasheet

Features:

- 1.5A Output Current Capability
- Input Operating Voltage Range: 2.3V to 6.0V
- Adjustable Output Voltage Range: 0.8V to 5.0V (MCP1827 only)
- Standard Fixed Output Voltages: 0.8V, 1.2V, 1.8V, 2.5V, 3.0V, 3.3V, 5.0V
- Other Fixed Output Voltage Options Available Upon Request
- Low Dropout Voltage: 330mV (typ.) @ 1.5A
- Output Voltage Tolerance: 0.5% (typ.)
- Stable with 1.0µF Ceramic Output Capacitor
- Fast response to Load Transients
- Low Supply Current: 120µA (typ.)
    - Shutdown Current: 0.1 µA (typ.) (MCP1827 only)
- Fixed Delay on Power Good Output (MCP1827 only)
- Short Circuit Current Limiting and Overtemperature Protection
- 5-Lead Plastic DDPAK, 5-Lead TO-220 Package Options (MCP1827)
- 3-Lead Plastic DDPAK, 3-Lead TO-220 Package Options (MCP1827S)

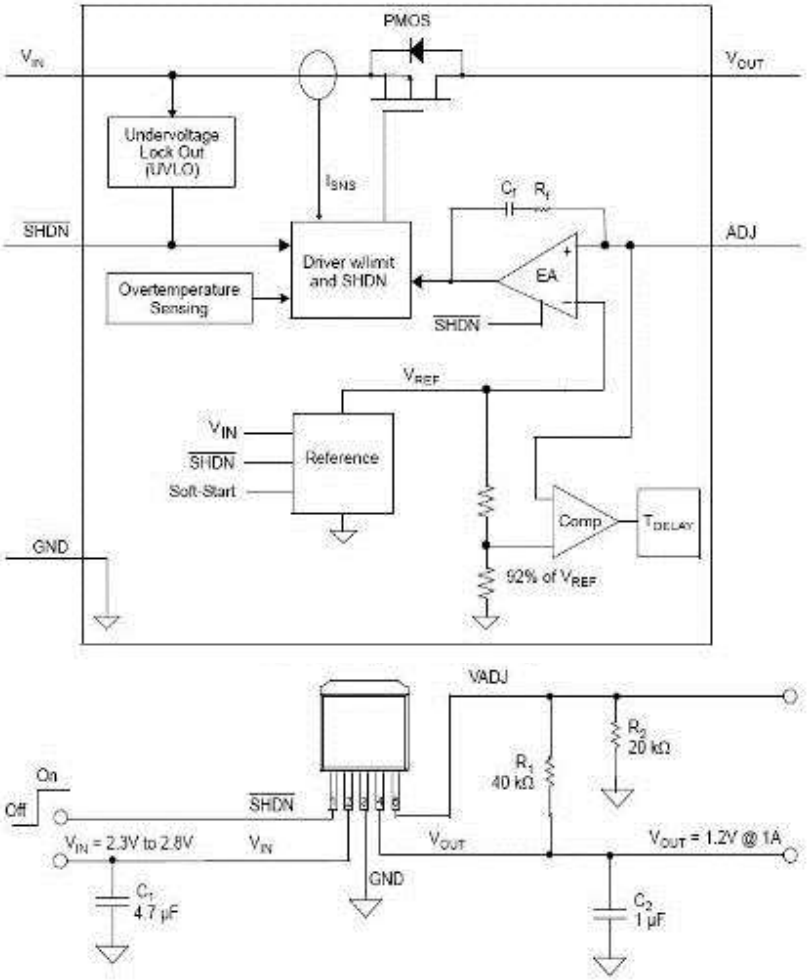

<< BACK

TC1300

Online Datasheet

Features:

- LDO with Integrated Microprocessor Reset Monitor Functionality
- Low Supply Current: 80µA (typ.)
- Stable with Any Type of Capacitor
- Very Low Dropout Voltage
- 10µs (typ.) Wake Up Time from SHDN
- Standard or Custom Output and Detected Voltages
- Power-Saving Shutdown Mode
- Bypass Input for Ultra-Quiet Operation
- Separate Input and Detected Voltage
- 140ms Guaranteed Minimum RESET Output Duration

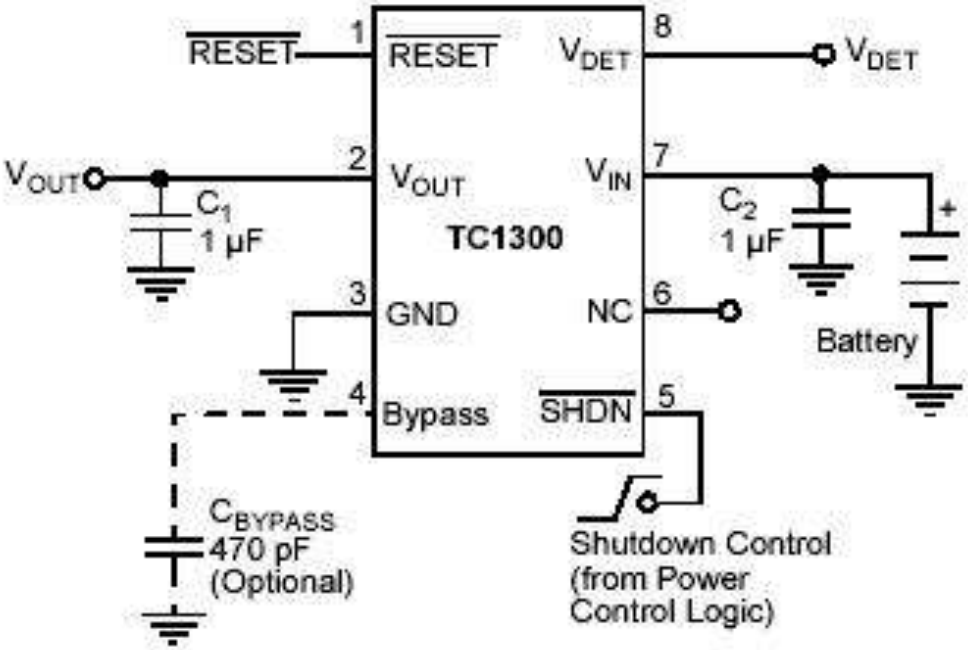

<< BACK

TC1307

Online Datasheet

Features:

- Four Independent 150mA LDOs
- Low Supply Current 220µA (typ.)
- SelectMode™: Selectable Output Voltages for High Design Flexibility
- Low Dropout Voltage: 100mV (typ.) with 150mA load
- 10µs (typ.) Wake Up Time from SHDN
- High Output Voltage Accuracy: 0.5% (typ.)
- Power-Saving Shutdown Mode
- RESET Output used as a Low Battery Detector or Processor Reset Generator
- Overcurrent and Overtemperature Protection
- Small 16-Pin QSOP Package

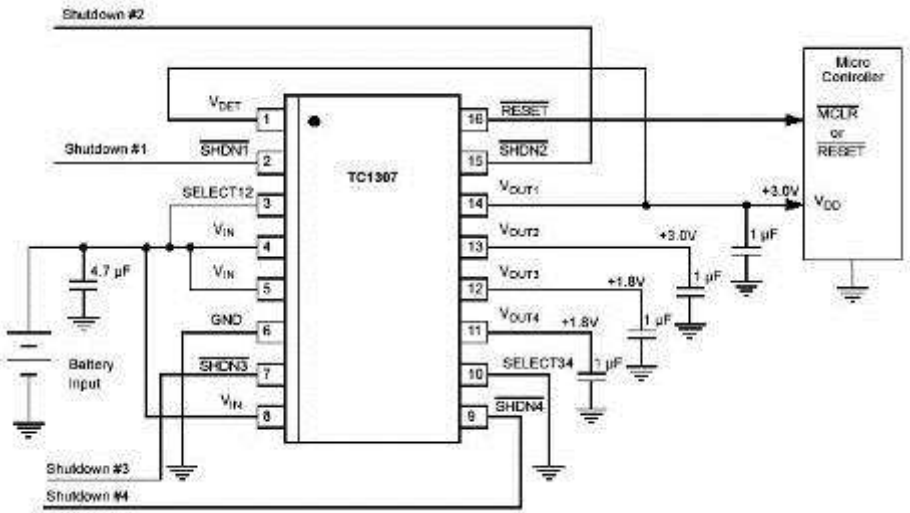

<< BACK

TC1303/4

Online Datasheet

Features:

- Dual-Output Regulator (500mA Buck Regulator and 300mA LDO)
- Power-Good Output with 300ms Delay
- Quiescent Current: 65µA (typ.)
- Independent Shutdown for Buck and LDO Outputs (TC1303)
- Synchronous Buck Regulator:
  - Over 90% (typ.) Efficiency
  - 2.0MHz Fixed-Frequency PWM
  - Automatic PWM to PFM Mode Transition
  - Adjustable and Standard Output Voltages
- Low-Dropout Regulator:
  - Dropout Voltage: 137mV @ 200mA (typ.)
  - Standard Fixed Output Voltages
- Power-Good Function:
  - Monitors Buck Output Function (TC1303A)
  - Monitors LDO Output Function (TC1303B)
  - Monitors Both Buck and LDO Output Function (TC1303C and TC1304)
- Sequenced Startup and Shutdown (TC1304)
- Small 10-Pin 3x3 DFN or MSOP Package

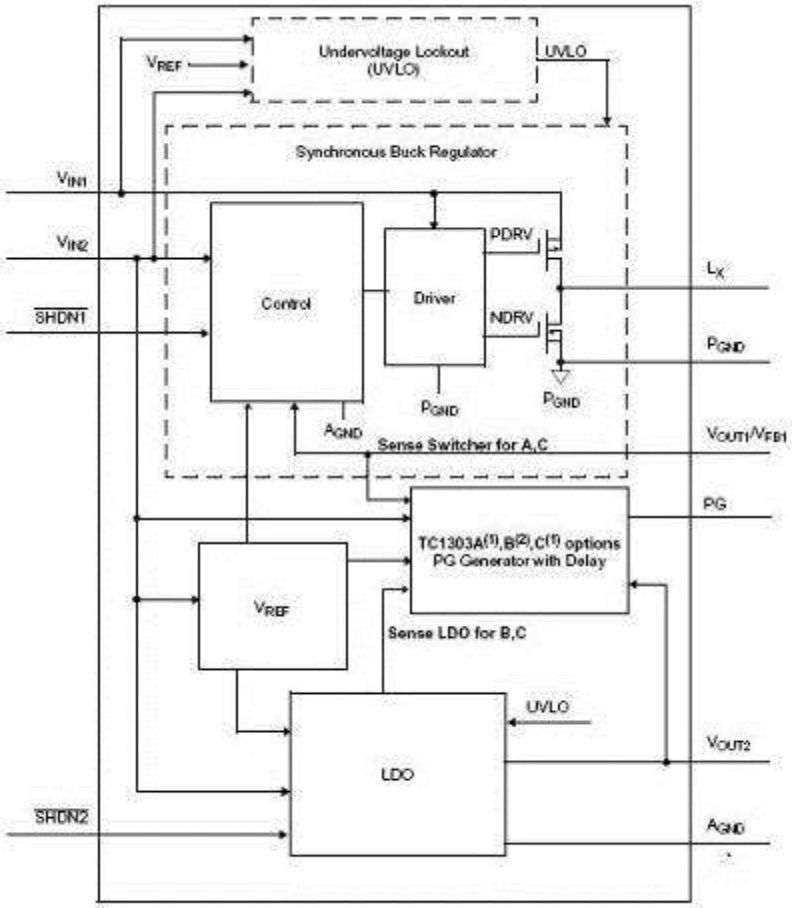

Note 1: PG open-drain for A,C options
2: PG push-pull output for B option

More Diagrams

<< BACK

TC1303/4 (cont.)

Online Datasheet

TC1303A
Fixed-Output Application
10-Lead MSOP

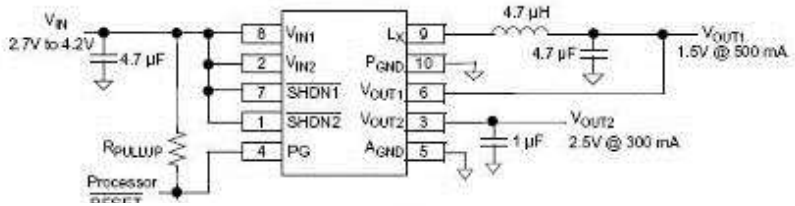

TC1303B
Adjustable-Output Application
10-Lead DFN

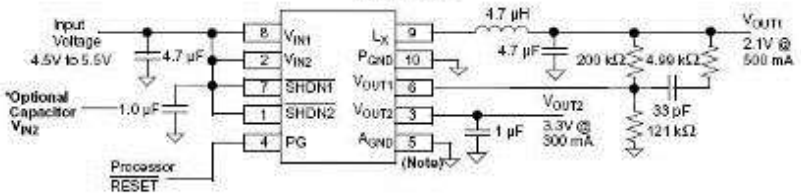

Note: Connect DFN package exposed pad to A_{GND}.

TC1304
Fixed-Output Application
10-Lead MSOP

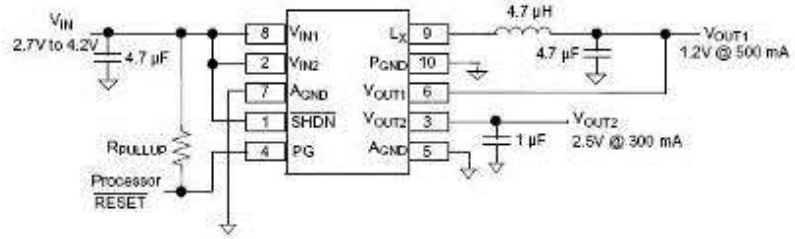

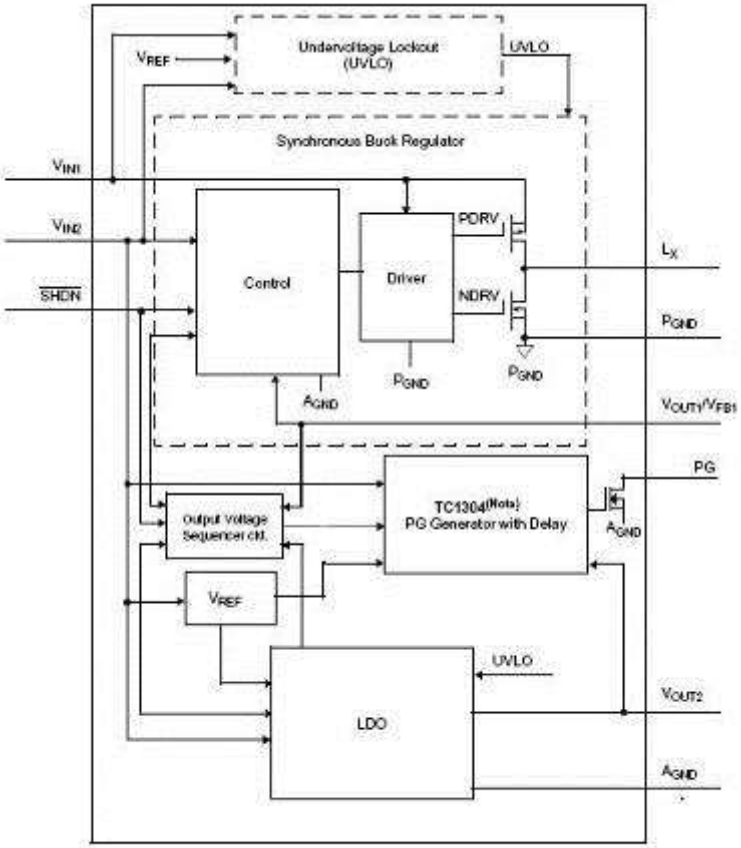

Note: PG open-drain for TC1304

Previous Diagrams

<< BACK

TC1313

Online Datasheet

Features:

- Dual-Output Regulator (500mA Buck Regulator and 300mA LDO)
- Quiescent Current: 57µA (typ.)
- Independent Shutdown for Buck and LDO Outputs
- Synchronous Buck Regulator:
  - Over 90% (typ.) Efficiency
  - 2.0MHz Fixed-Frequency PWM
  - Automatic PWM to PFM Mode Transition
  - Adjustable and Standard Output Voltages
- Low-Dropout Regulator:
  - Dropout Voltage: 137mV @ 200mA (typ.)
  - Standard Fixed Output Voltages
- Undervoltage Lockout (UVLO)
- Output Short Circuit Protection
- Overtemperature Protection
- Small 10-Pin 3x3 DFN or MSOP Package

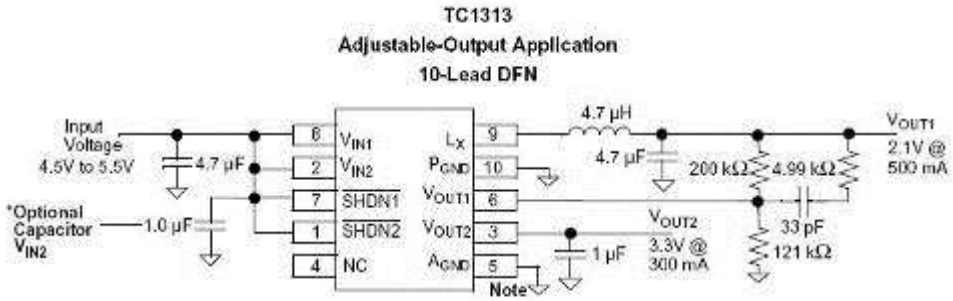

Note: Connect DFN package exposed pad to A_{GND}.

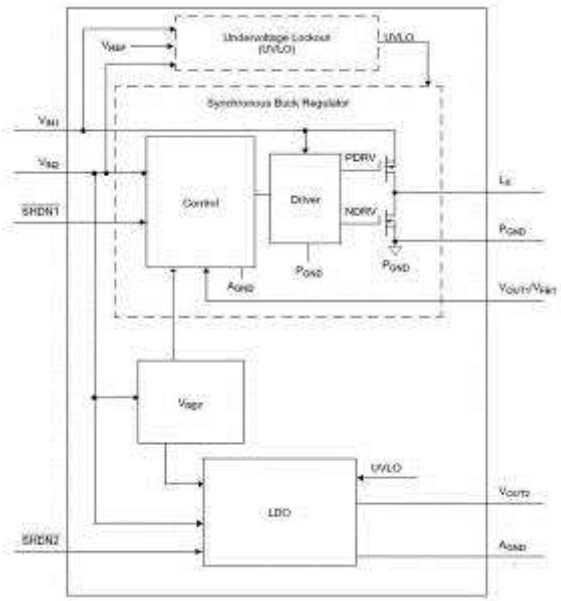

<< BACK

TC1301

Online Datasheet

Features:

- Dual Output LDO with Microcontroller Reset Monitor Functionality:
  - V_{OUT1} = 1.5 to 3.3V @ 300mA
  - V_{OUT2} = 1.5V to 3.3V @ 150mA
  - V_{RESET} = 2.20V to 3.20V
- Output Voltage and RESET Threshold Voltage Options Available (See Table 8-1)
- Low Dropout Voltage:
  - V_{OUT1}: 104mV @ 300mA (typ.)
  - V_{OUT2}: 150mV @ 150mA (typ.)
- Low Supply Current: 116µA (typ.)
- Reference Bypass Input for Low Noise Operation
- Both Output Voltages Stable with a Minimum 1µF Ceramic Output Capacitor
- Separate Input for RESET Detect Voltage (TC1301A)
- Separate V_{OUT1} and V_{OUT2} SHDN Pins (TC1301B)
- Power Saving Shutdown Mode
- Small 8-Pin DFN and MSOP Packages

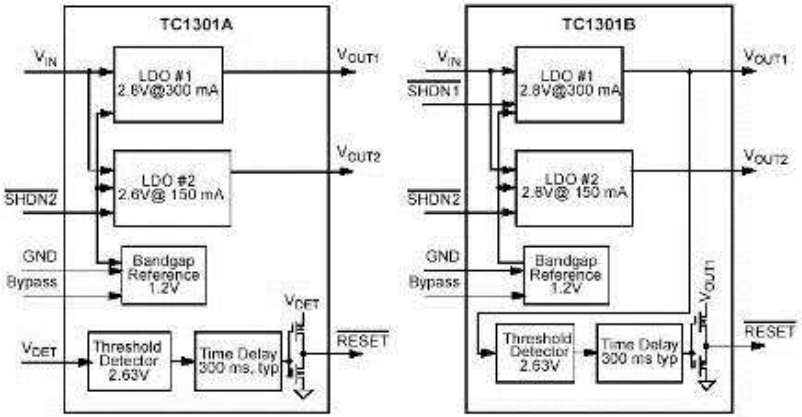

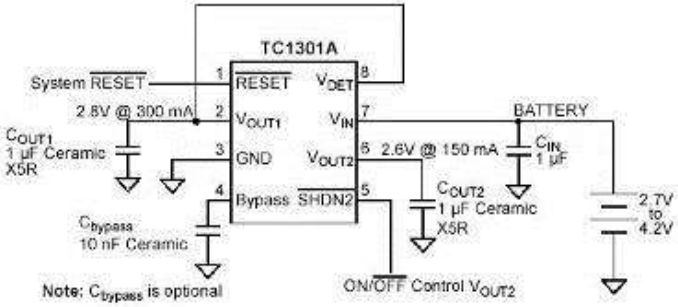

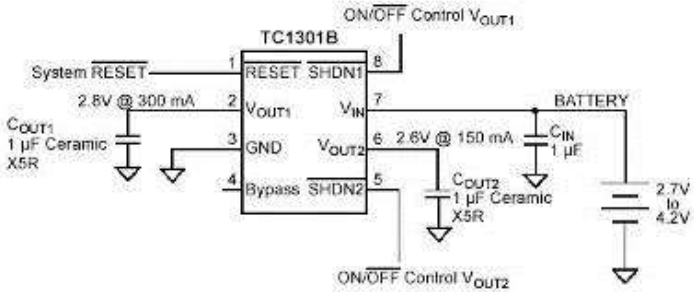

TC1302 >>

<< BACK

TC1302

Online Datasheet

Features:

- Dual Output LDO:
  V_{OUT1} = 1.5 to 3.3V @ 300mA
  V_{OUT2} = 1.5V to 3.3V @ 150mA
  V_{RESET} = 2.20V to 3.20V
- Output Voltage Options (See Table 8-1)
- Low Dropout Voltage:
  - V_{OUT1}: 104mV @ 300mA (typ.)
  - V_{OUT2}: 150mV @ 150mA (typ.)
- Low Supply Current: 116µA (typ.)
- Reference Bypass Input for Low Noise Operation
- Both Output Voltages Stable with a Minimum 1µF Ceramic Output Capacitor
- Separate V_{OUT1} and V_{OUT2} SHDN Pins (TC1302B)
- Power Saving Shutdown Mode
- Overtemperature and Overcurrent Protection
- Small 8-Pin DFN and MSOP Packages

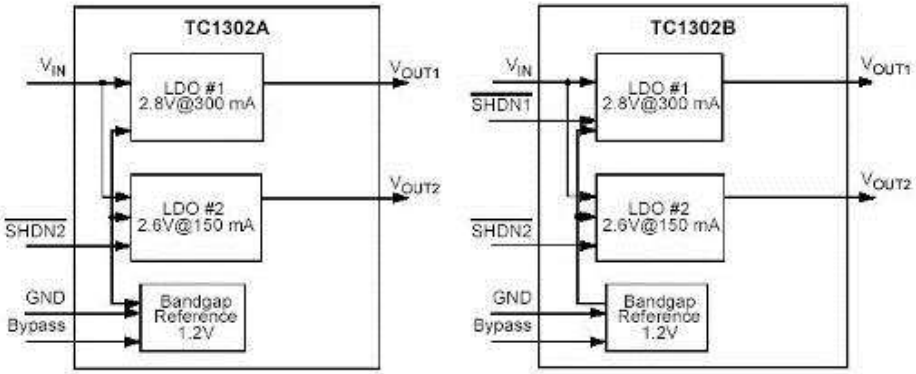

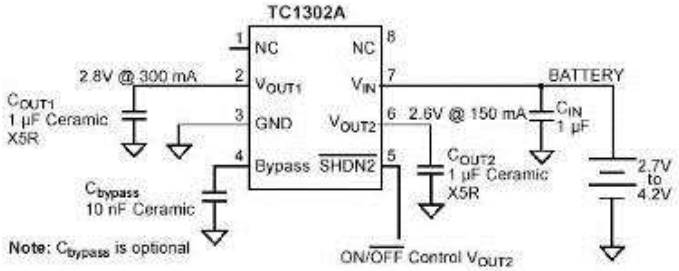

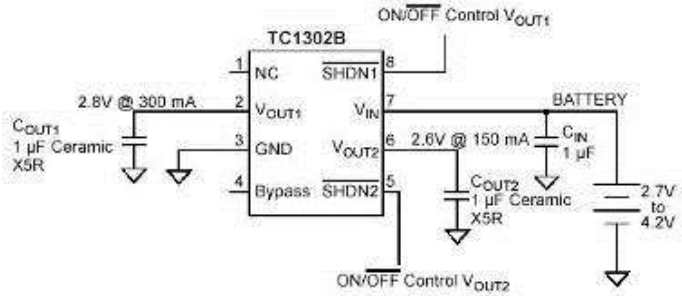

TC1301 >>

<< BACK

TC1044S

Online Datasheet

Features:

- Converts +5V Logic Supply to ±5V System
- Wide Input Voltage Range: 1.5V to 12V
- Efficient Voltage Conversion: 99.9%
- Excellent Power Efficiency: 98%
- Low Power Consumption: 80µA @ V_{IN} = 5V
- Low Cost and Easy to Use
- Only Two External Capacitors Required
- RS-232 Negative Power Supply
- Available in 8-Pin SOIC and 8-Pin Plastic DIP Packages
- Improved ESD Protection: Up to 10kV
- No External Diode Required for High Voltage Operation
- Frequency Boost Raises F_{OSC} to 45kHz

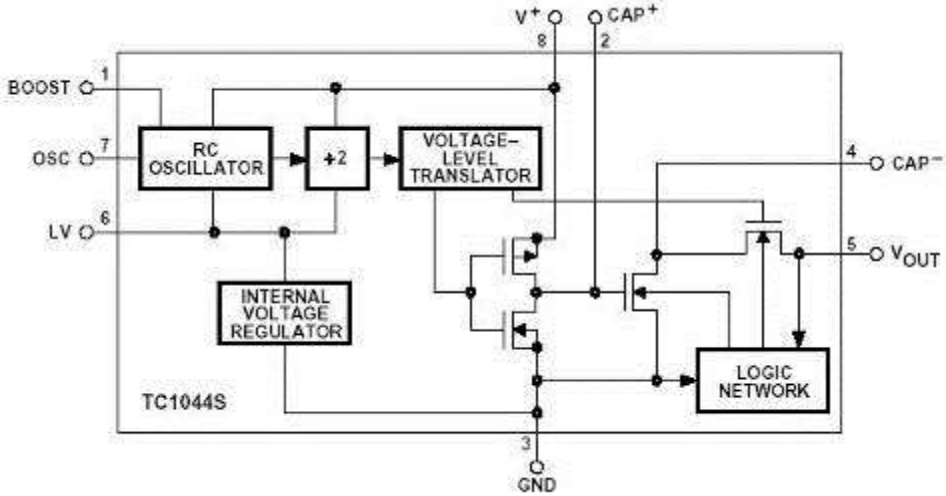

TC7660S >>

<< BACK

TC7660S

Online Datasheet

Features:

- Oscillator Boost from 10kHz to 45kHz
- Converts +5V Logic Supply to ±5V System
- Wide Input Voltage Range: 1.5V to 12V
- Efficient Voltage Conversion: 99.9%
- Excellent Power Efficiency: 98%
- Low Power Consumption: 80µA @ V_{IN} = 5V
- Low Cost and Easy to Use
- Only Two External Capacitors Required
- Available in 8-Pin SOIC Package
- Improved ESD Protection: Up to 10kV
- No External Diode Required for High Voltage Operation

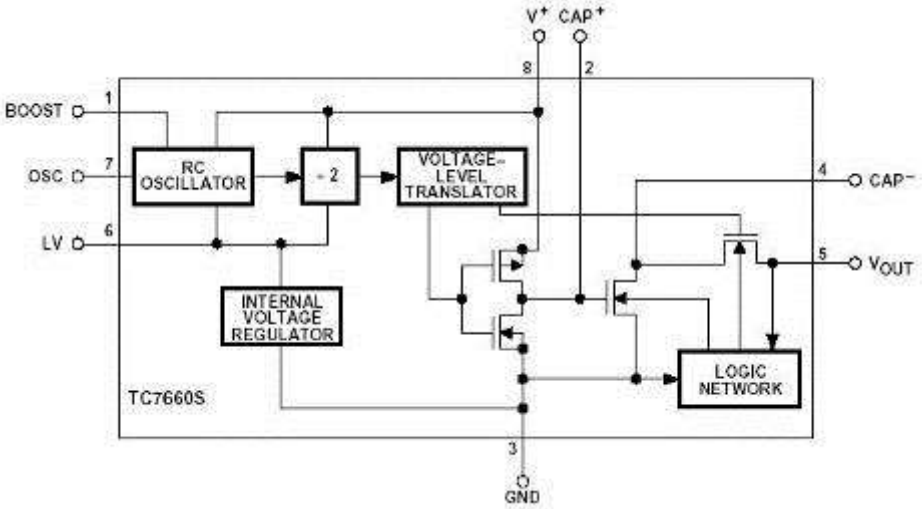

TC1044S >>

<< BACK

TC7660

Online Datasheet

Features:

- Wide Input Voltage Range: 1.5V to 12V
- Efficient Voltage Conversion: 99.9%
- Excellent Power Efficiency: 98%
- Low Power Consumption: 80µA @ V_{IN} = 5V
- Low Cost and Easy to Use
- Only Two External Capacitors Required
- Available in 8-Pin SOIC Package, PDIP, and CERDIP Packages
- Improved ESD Protection: 3kV HBM
- No External Diode Required for High Voltage Operation

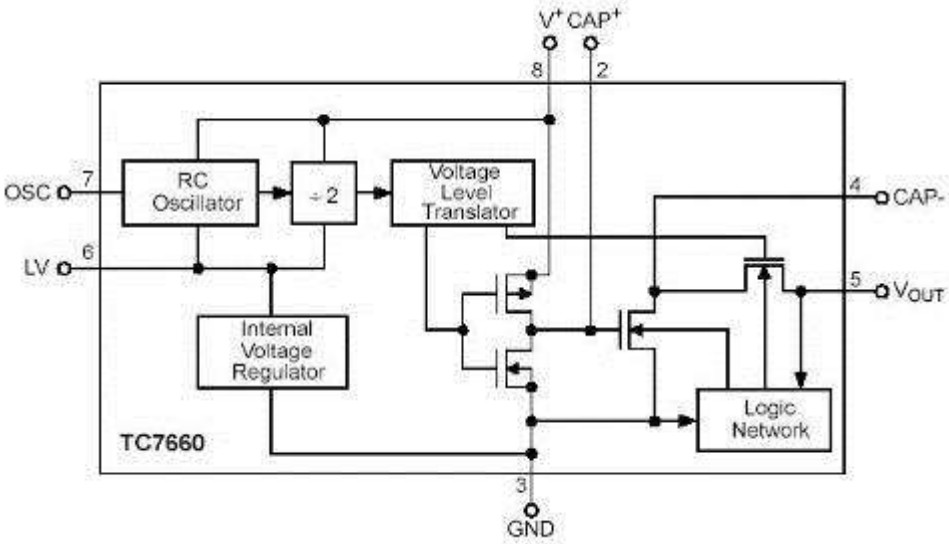

TC7660H >>

<< BACK

TC7660H

Online Datasheet

Features:

- Wide Input Voltage Range: 1.5V to 10V
- Efficient Voltage Conversion: 99.7%
- Power Efficiency: 85%
- Pin Compatible with TC7660, High Frequency Performance DC-to-DC Converter
- Low Cost, Only Two External Capacitors Required (1µF)
- Available in 8-Pin SOIC Package and PDIP Packages

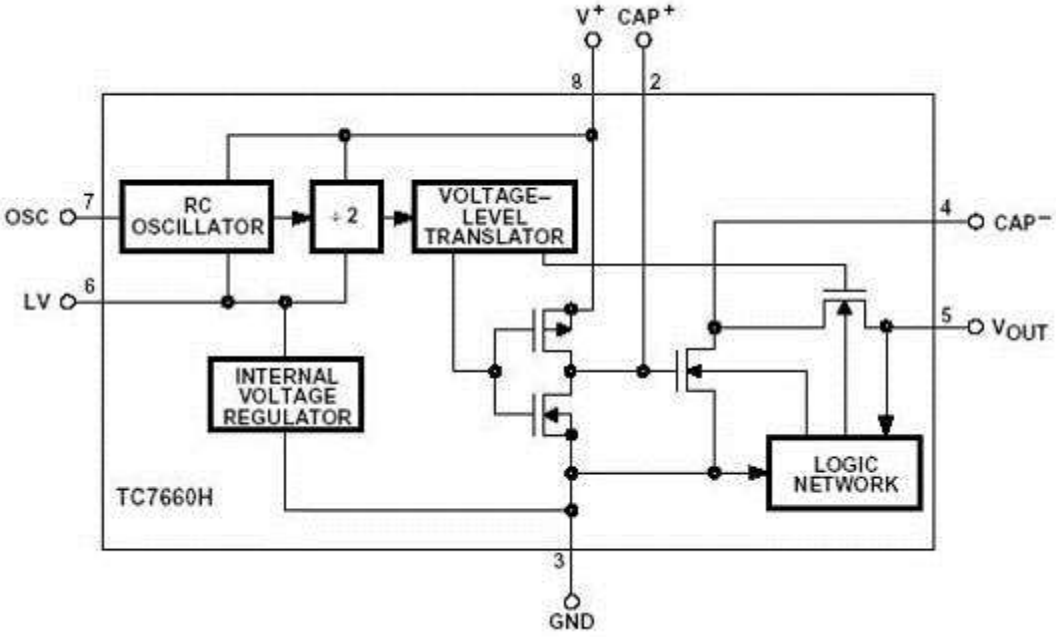

TC7660 >>

<< BACK

TC7662B

Online Datasheet

Features:

- Wide Operating Voltage Range: 1.5V to 15V
- Boost Pin (Pin 1) for Higher Switching Frequency
- High Power Efficiency: 96%
- Easy to Use: Requires Only 2 External Non-Critical Passive Components
- Improved Direct Replacement for
- Industry Standard ICL7660 and Other Second Source Devices

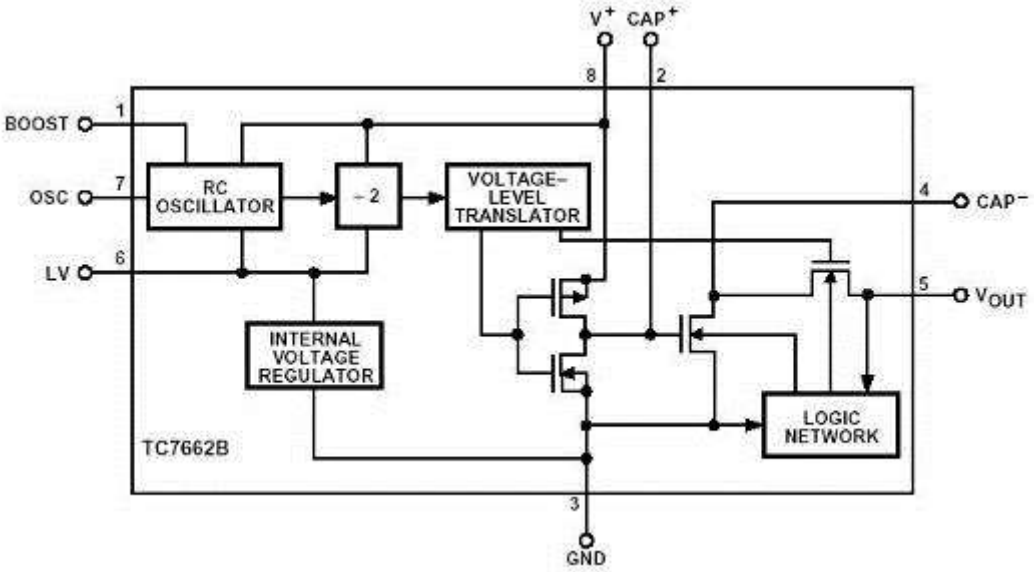

<< BACK

TC1240/A

Online Datasheet

Features:

- 6-Pin SOT-23A Package
- >99% Typical Voltage Conversion Efficiency
- Voltage Doubling
- Input Voltage Range:
  TC1240: +2.5 to +4.0V
  TC1240A: +2.5V to +5.5V
- Low Output Resistance:
  TC1240: 17Ω (typ.)
  TC1240A: 17Ω (typ.)
- Only Two External Capacitors Required
- Low Supply Current
  TC1240: 180µA (typ.)
  TC1240A: 550µA (typ.)
- Power-Saving Shutdown Mode: 1µA (max.)
- Fully Compliant with 1.8V Logic Systems

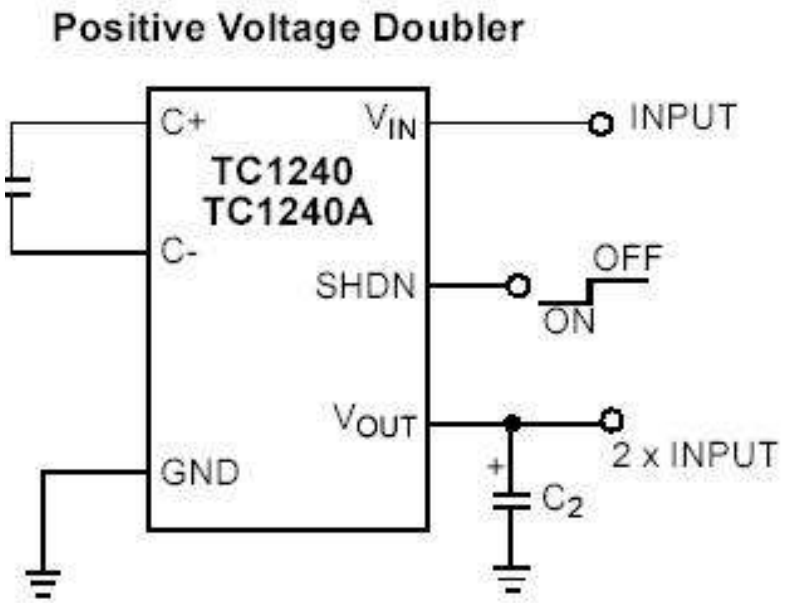

<< BACK

TC7662A

Online Datasheet

Features:

- Wide Operating Range: 3V to 18V
- 40mA Output Current
- Pin Compatible with ICL7662/SI7661/TC7660/ LTC1044
- No External Diodes Required
- Low Output Impedance @ I_L = 20mA, 40Ω (typ.)
- No Low-Voltage Terminal Required
- CMOS Construction
- Available in 8-Pin PDIP Package

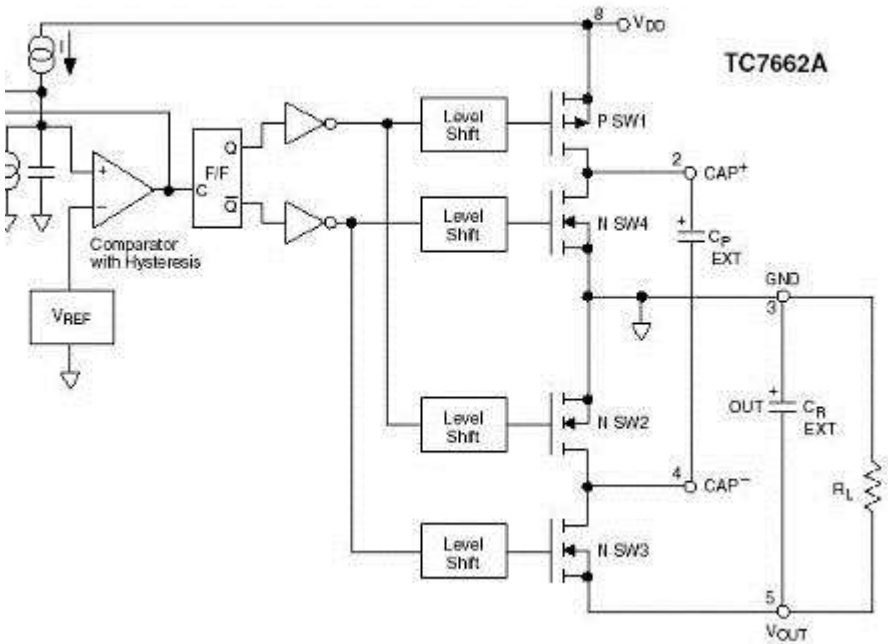

<< BACK

TC962

Online Datasheet

Features:

- Pin Compatible With TC7662/ICL7662/SI7661
- High Output Current: 80mA
- No External Diodes Required.
- Wide Operating Range: 3V to 18V
- Low Output Impedance: 28Ω (typ.)
- No Low Voltage Terminal Required
- Application Zener On Chip
- OSC Frequency Doubling Pin Option for Smaller Output Capacitors

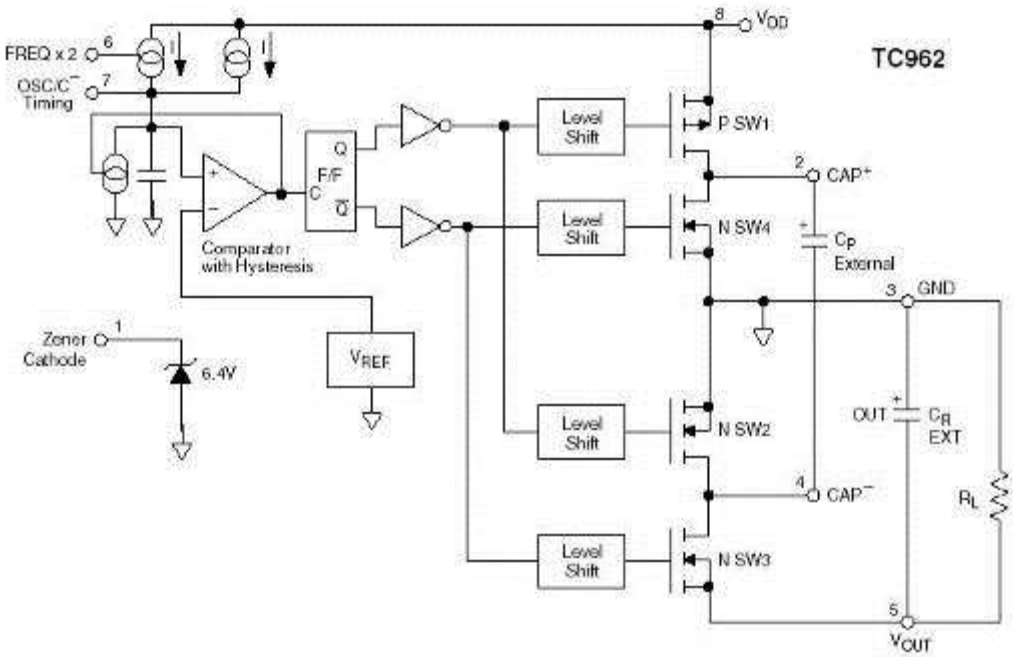

<< BACK

TC682

Online Datasheet

Features:

- Doubling/Inverting Functionality
- 99.9% Voltage Conversion Efficiency
- 92% Power Conversion Efficiency
- Wide Input Voltage Range: +2.4V to +5.5V
- Only 3 External Capacitors Required
- 185µA Supply Current
- Space Saving 8-Pin SOIC and PDIP Packages

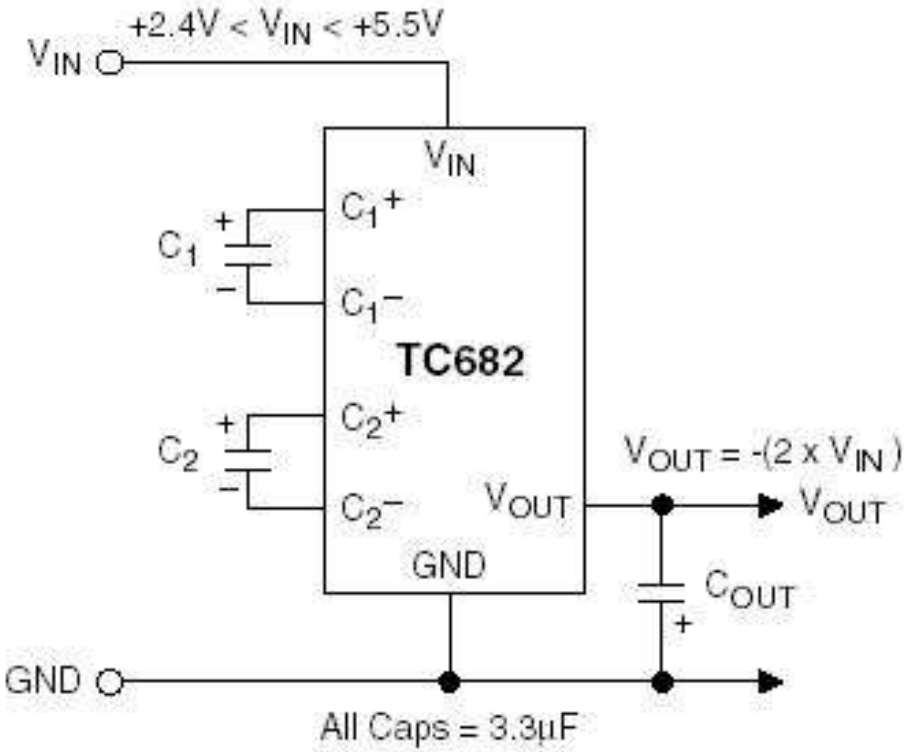

<< BACK

MCP1252/3

Online Datasheet

Features:

- Inductorless, Buck/Boost, DC/DC Converter
- Low Power: 80µA (typ.)
- High Output Voltage Accuracy: ±2.5% (V_{OUT} Fixed)
- 120mA Output Current
- Wide Operating Temperature Range: -40°C to +85°C
- Thermal Shutdown and Short-Circuit Protection
- Uses Small Ceramic Capacitors
- Switching Frequency:
  MCP1252: 650kHz
  MCP1253: 1MHz
- Low Power Shutdown Mode: 0.1µA (typ.)
- Shutdown Input Compatible 1.8V Logic
- V_{IN} Range: 2.1V to 5.5V
- Selectable Output Voltage (3.3V or 5.0V) or Adjustable Output Voltage
- Space-saving, 8-Lead MSOP
- Soft-Start Circuitry to Minimize In-Rush Current

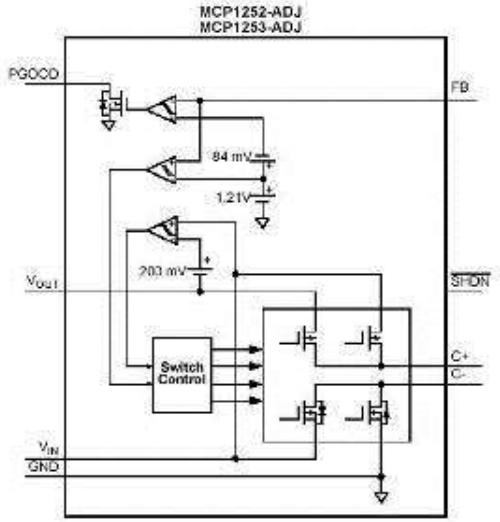

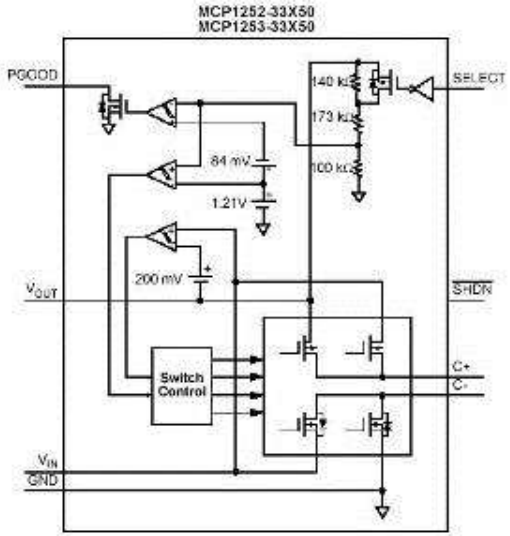

<< BACK

MCP1256/7/8/9

Online Datasheet

Features:

- Inductorless 1.5x, 2x Boost DC/DC Converter
- Output Voltage: 3.3V
- Voltage Accuracy: ±3.0% (V_{OUT} Fixed)
- Output Current Up To 100mA
- 20mV_{P-P} Output Voltage Ripple
- Temperature Range: -40°C to +125°C
- Thermal Shutdown and Short Circuit Protection
- Uses small Ceramic Capacitors
- Switching Frequency: 650kHz
- Power Good Output
- Low Power SLEEP Mode: MCP1256/7
- Low Power Shutdown Mode: 0.1µA (typ.)
- Shutdown Input Compatible with 1.8V Logic
- V_{IN} Range: 1.8V to 3.6V
- Soft-Start Circuitry to Minimize In-Rush Current
- Packages: 10-Pin MSOP, 10-Lead 3x3 DFN

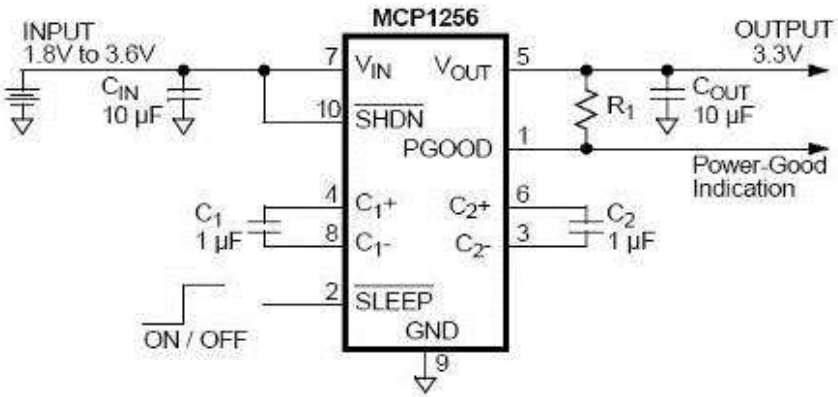

Typical Application with Power-Good Indication

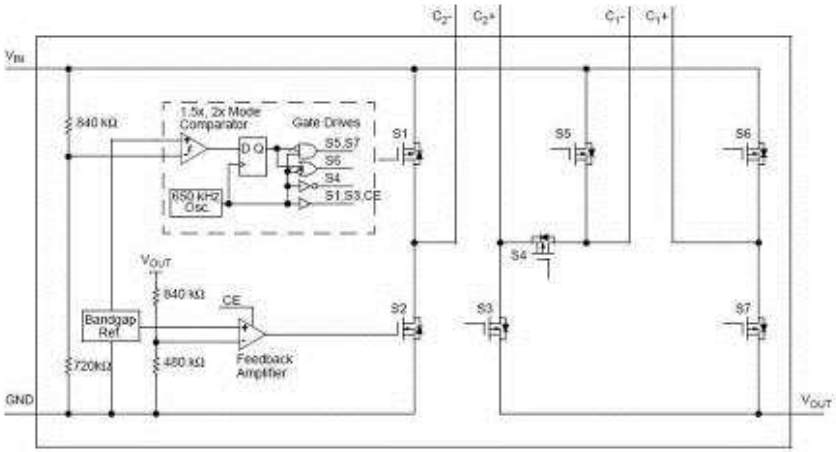

<< BACK

TC105

Online Datasheet

Features:

- 57µA (typ.) Supply Current
- 1A Output Current
- 0.5µA Shutdown Mode
- 300 kHz Switching Frequency for Small Inductor Size
- Programmable Soft-Start
- 92% Efficiency (typ.)
- Small Package: 5-Pin SOT-23A

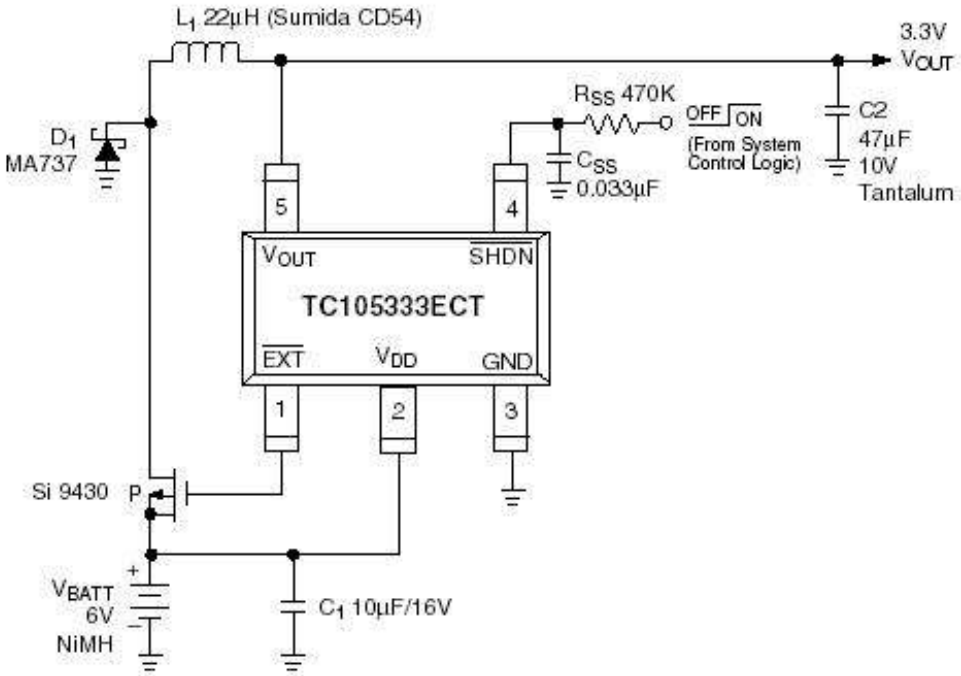

3.3V Regulated Supply Using 6V NiMH Battery Pack Input

<< BACK

MCP1601

Online Datasheet

Features:

- Input Range: 2.7V to 5.5V
- Low Output Voltage Capability: 0.9V
- 500mA Continuous Output Current
- 3 operating modes: PWM, PFM and LDO
- Auto-Switching from PWM/PFM Operation
- Integrated Buck and Synchronous Switches
- Ceramic or Electrolytic Filtering Capacitors
- Shutdown mode
- 750kHz Fixed Switching Frequency
- Oscillator Synchronization to 1.0MHz PWM
- Integrated UVLO, Soft-start, and Overtemperature protection
- Short circuit protection
- Temperature Range: -40°C to +85°C
- Small 8-Pin MSOP Package

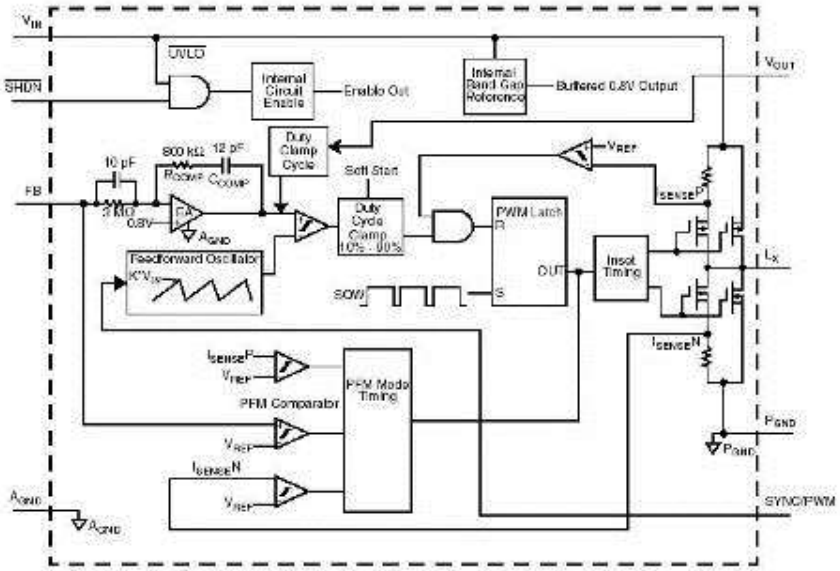

Typical Application (2.7V to 4.2V)

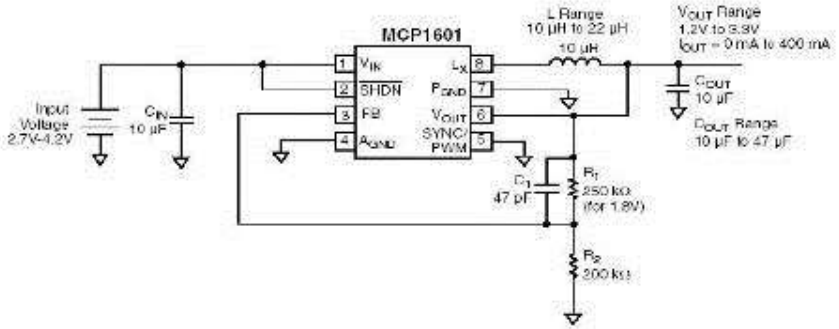

<< BACK

MCP1612

Online Datasheet

Features:

- Input Voltage Range: 2.7V to 5.5V
- Fixed switching frequency: 1.4MHz
- Integrated Buck and Synchronous Switches
- Continuous Output Current: 1A
- Adjustable Output Voltage Range: 0.8V to 5.0V
- 100% duty cycle capability for Low Input Voltages
- Shutdown Control with I_Q < 0.01µA (typ.)
- Overvoltage, Overcurrent, and Thermal Protection
- Under Voltage Lockout (UVLO)
- Integrated soft start
- Space Saving 8-Pin MSOP, DFN Packages
- Extended Operating Temperature Range: -40°C to +85°C

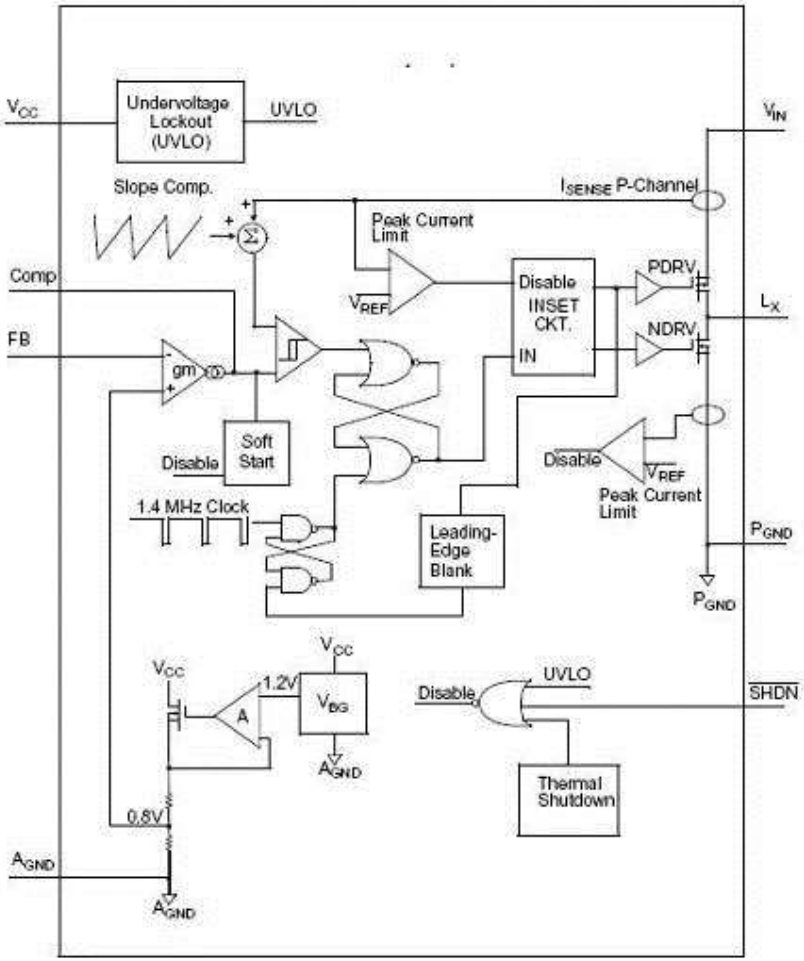

<< BACK

MCP1602

Online Datasheet

Features:

- Power-Good Output with 262ms Delay
- Over 90% Efficiency (typ.)
- Output Current: up to 500mA
- Low Quiescent Current: 45µA (typ.)
- Low Shutdown Current: 0.05µA (typ.)
- Automatic PWM to PFM Mode Transition
- Adjustable Output Voltage:
  0.8V to 4.5V
- Fixed Output Voltage:
  1.2V, 1.5V, 1.8V, 2.5V, 3.3V
- 2.0MHz Fixed-Frequency PWM (Heavy Load)
- Internally Compensated
- Undervoltage Lockout (UVLO)
- Overtemperture Protection
- Overcurrent Protection
- 8-Lead MSOP, 8-Lead 3x3 DFN

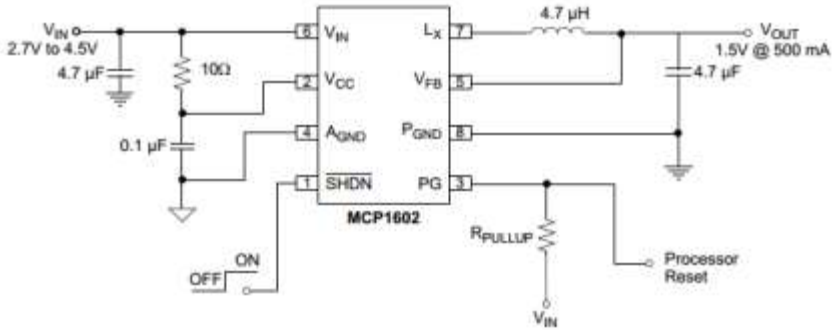

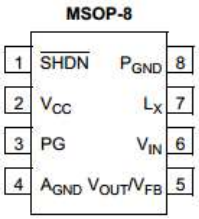

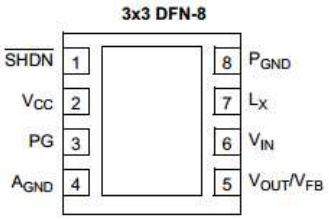

<< BACK

MCP1603

Online Datasheet

Features:

- Over 90% Efficiency (typ.)
- Output Current: up to 500mA
- Low Quiescent Current: 45µA (typ.)
- Low Shutdown Current: 0.01µA (typ.)
- Automatic PWM to PFM Mode Transition
- Adjustable Output Voltage:
  0.8V to 4.5V
- Fixed Output Voltage:
  1.2V, 1.5V, 1.8V, 2.5V, 3.3V
- 2.0MHz Fixed-Frequency PWM (Heavy Load)
- Internally Compensated
- Undervoltage Lockout (UVLO)
- Overtemperture Protection
- 100% Duty Cycle Operation
- Space Saving Packages:
  5-Lead TSOT, 8-Lead 2x3 DFN

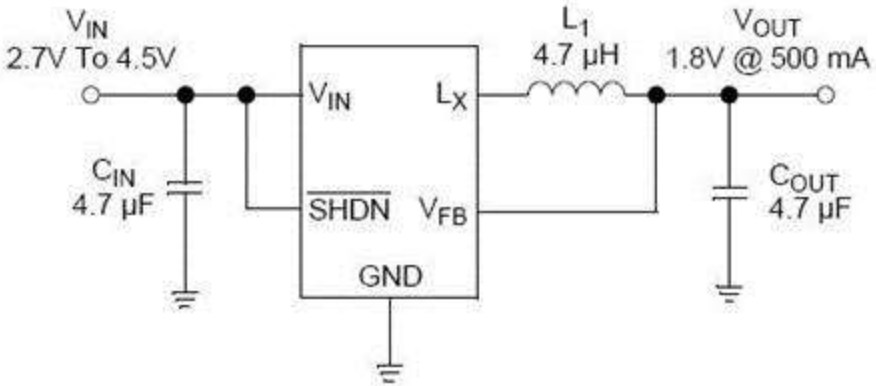

<< BACK

MCP16311/12

Online Datasheet

Features:

- Up to 95% Typical Efficiency
- Input Voltage Range: 4.4V to 30V
- 2A Output Current Capability
- Output Voltage Range: 2.0V to 24V
- Integrated N-Channel High-Side Switch: 300 mΩ
- Integrated N-Channel Low-Side Switch: 170 mΩ
- Stable Reference Voltage: 0.8V
- Automative PFM/PWM Operation
    - 500 kHz PWM Operation
    - MCP16312 proved PWM-Only Operation
- Low Quiescent Current
    - 44 µA (PFM Mode, typical)
    - 3 µA Shutdown (typical)
- Peak Current Mode Control
- Undervoltage Lockout (UVLO)
- Overtemperature Protection
- 8-lead MSOP and 2x3 TDFN

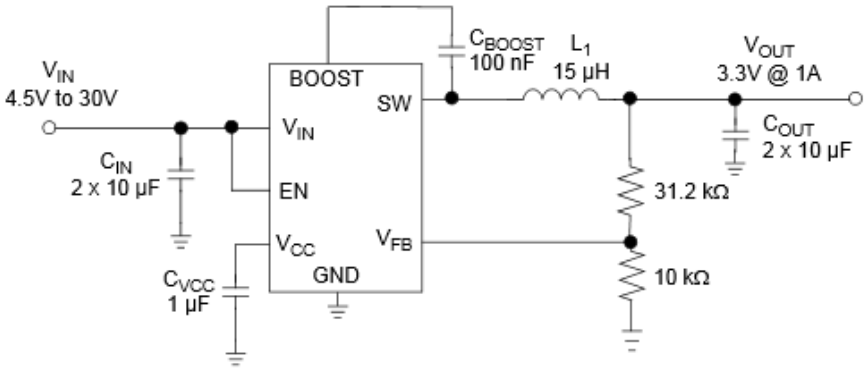

<< BACK

MCP16331

Online Datasheet

Features:

- Up to 96% Efficiency
- Input Voltage Range: 4.4V to 50V
- Output Voltage Range: 2.0V to 24V
- 2% Output Voltage Accuracy
- Qualification: AEC-Q100 Rev. G, Grade 1(-40ºC to 125ºC)
- Minimum 500 mA Output Current
  - See Figure 2-9 for Maximum Output Current vs VIN
  - Up to 1.2A Output Current at 3.3V and 5V VOUT, VIN>12V, SOT-23 at 25ºC
  - Up to 0.8A Output Current at 12V VOUT, VIN>18V, SOT-23 at 25ºC
- 500 kHz Fixed Frequency
- Adjustable Output Voltage
- Low Device Shutdown Current
- Peak Current Mode Control
- Internal Compensation
- Stable with Ceramic Capacitors
- Internal Soft-Start
- Internal pull up on EN
- Cycle-by-Cycle Peak Current Limit
- Undervoltage Lockout (UVLO): 4.1V to Start; 3.6V to Stop
- Overtemperature Protection
- Packages: 6-Lead SOT-23, 8-Lead 2x3 TDFN

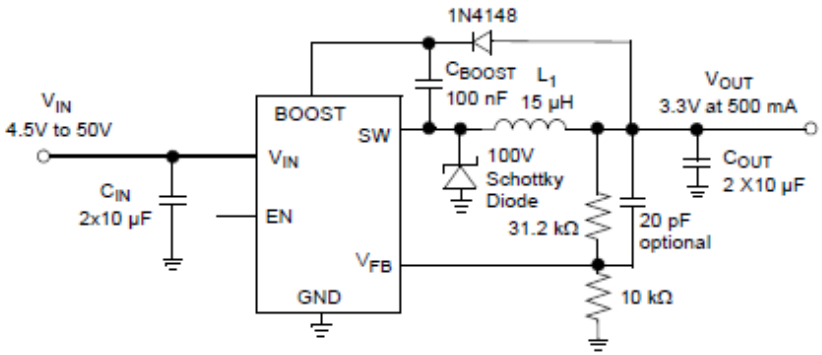

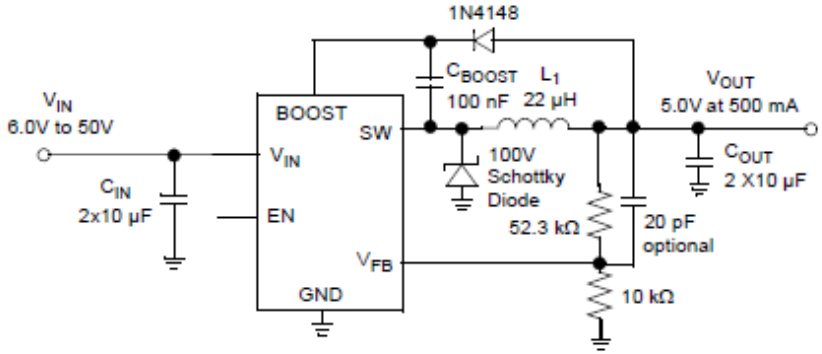

<< BACK

MCP1661

Online Datasheet

Features:

- Up to 92% Efficiency
- High Output Voltage Range: up to 32V
- 1.3A Peak Input Current Limit:
  - IOUT > 200 mA @ 5.0V VIN, 12V VOUT
  - IOUT > 125 mA @ 3.3V VIN, 12V VOUT
  - IOUT > 100 mA @ 4.2V VIN, 24V VOUT
- Input Voltage Range: 2.4V to 5.5V
- Undervoltage Lockout (UVLO):
  - UVLO@VIN Rising: 2.3V, typical
  - UVLO@VIN Falling: 1.85V, typical
- No Load Input Current: 250 µA, typical
- Sleep mode: 200 nA
- PWM Operation with Skip mode: 500 kHz
- Feedback Voltage Reference: VFB = 1.227V
- Cycle-by-Cycle Current Limiting
- Internal Compensation
- Inrush Current Limiting and Internal Soft-Start
- Output Overvoltage Protection (OVP)
- Overtemperature Protection
- Easily Configurable for SEPIC or Flyback Topologies
- Packages:5-Lead SOT-23, 2x3 8-Lead TDFN

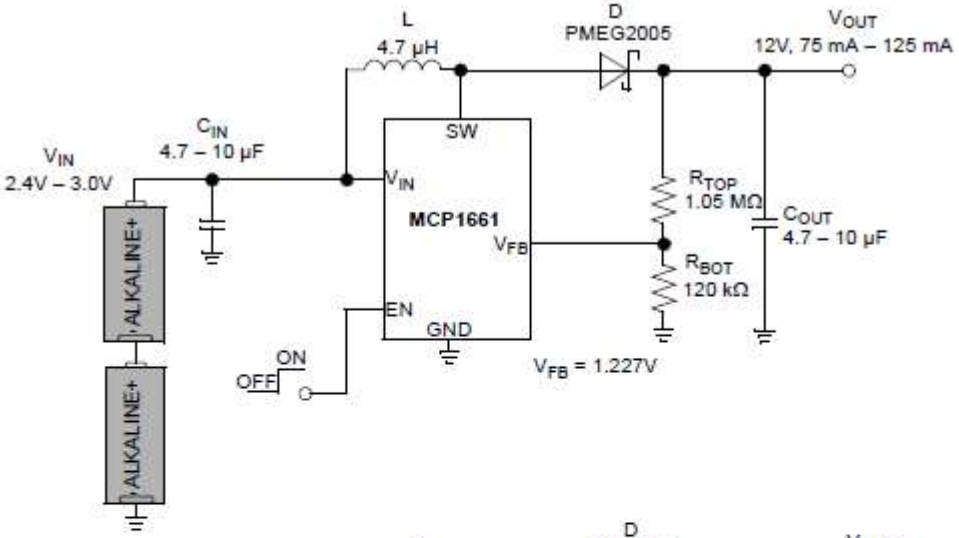

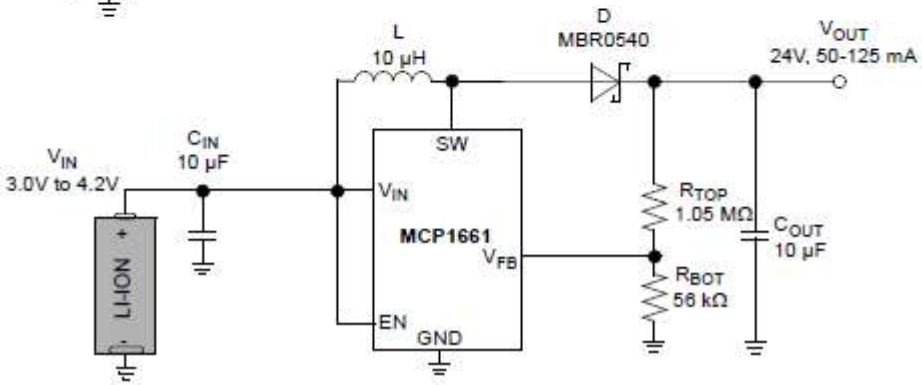

<< BACK

MCP1662

Online Datasheet

Features:

- Up to 92% Efficiency
- Drive LED Strings in Constant Current
- 1.3A Peak Input Current Limit:
  - ILED up to 200 mA @ 5.0V VIN, 4 White LEDs
  - ILED up to 125 mA @ 3.3V VIN, 4 White LEDs
  - ILED up to 100 mA @ 4.2V VIN, 8 White LEDs
- Input Voltage Range: 2.4V to 5.5V
- Feedback Voltage Reference: VFB = 300 mV
- Undervoltage Lockout (UVLO):
  - UVLO@VIN Rising: 2.3V, typical
  - UVLO@VIN Falling: 1.85V, typical
- Sleep Mode: 200 nA
- PWM Operation: 500 kHz Switching Frequency
- Cycle-by-Cycle Current Limiting
- Internal Compensation
- Inrush Current Limiting and Internal Soft Start
- Open Load Protection (OLP)
- Overtemperature Protection
- Packages: 5-Lead SOT-23, 8-Lead 2x3 TDFN

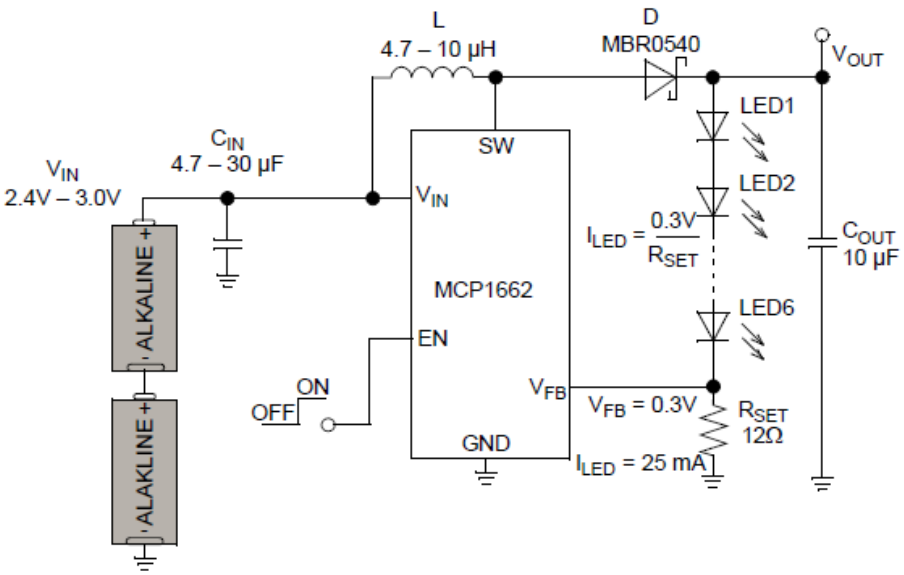

<< BACK

MCP1664

Online Datasheet

Features:

- Up to 92% Efficiency
- High Output Voltage Range: up to 32V
- 1.8A Peak Input Current Limit:
  - I_{LED} up to 300 mA @ 5.0V VIN, 4 White LEDs
  - I_{LED} up to 200 mA @ 3.3V VIN, 4 White LEDs
  - I_{LED} up to 150 mA @ 4.2V VIN, 8 White LEDs
- Input Voltage Range: 2.4V to 5.5V
- Undervoltage Lockout (UVLO):
  - UVLO@VIN Rising: 2.3V, typical
  - UVLO@VIN Falling: 1.85, typical
- No Load Input Current: 250 µA, typical
- Sleep mode with 200 nA Typical Quiescent Current
- PWM Operation with Skip mode: 500 kHz
- Feedback Voltage Reference: VFB= 300 mV
- Cycle-by-Cycle Current Limiting
- Internal Compensation
- Inrush Current Limiting and Internal Soft-Start
- Output Overvoltage Protection (OVP) in the event of:
  - Feedback Pin Shorted to GND (Prevent Excessive Current into LEDs)
  - Disconnected LED String (Prevent Overvoltage to the Converter's Output and SW Pin)
- Overtemperature Protection
- Packages: 5-Lead SOT-23 or 2x3 8-Lead TDFN

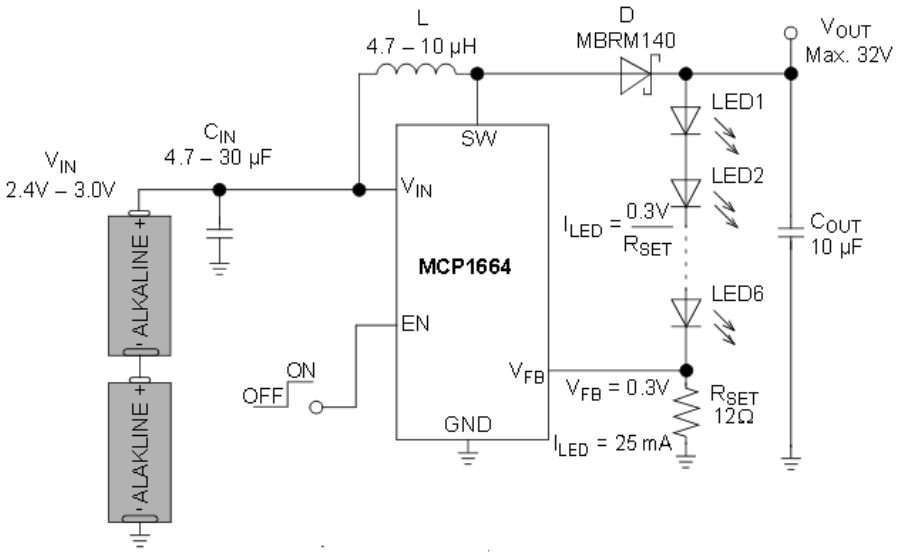

<< BACK

TC110

Online Datasheet

Features:

- Guaranteed Start-Up at 0.9V
- Supply Current: 50µA @ 100kHz (typ.)
- Shutdown Mode: 0.5µA
- 300mA Output Current @ $V_{IN} \geq 2.7V$
- 100KHz and 300KHz Switching Frequency Options
- Programmable Soft-Start
- 84% Efficiency
- Small Package: 5-Pin SOT-23A

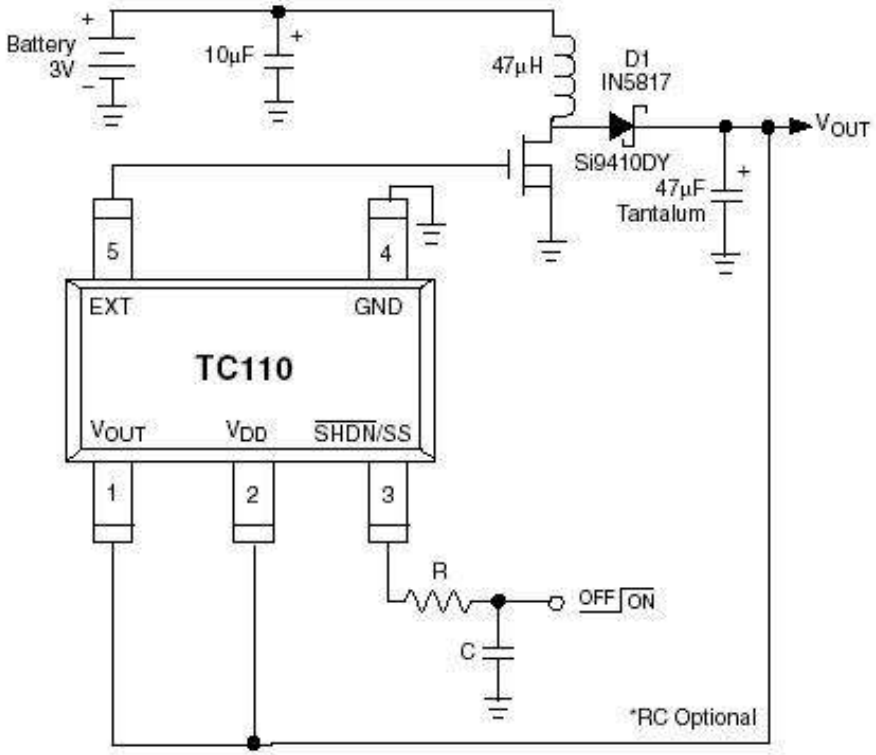

3V to 5V Supply

<< BACK

MCP1632

Online Datasheet

Features:

- High-Speed PWM Controller
- Fixed Switching Frequency Options (fSW): 300 or 600 kHz
- Integrated Low-Side MOSFET Driver support many Low-Side Power Conversion Topologies
- Configurable as either a Peak Current Mode Controller or a Voltage Mode Controller
- Internal UVLO, OVLO, and over temperature protection
- Low Operating Current < 5 mA (typical)
- Extended Temperature Range: -40°C to +125°C

Typical Application Circuit – Peak Current Mode Control

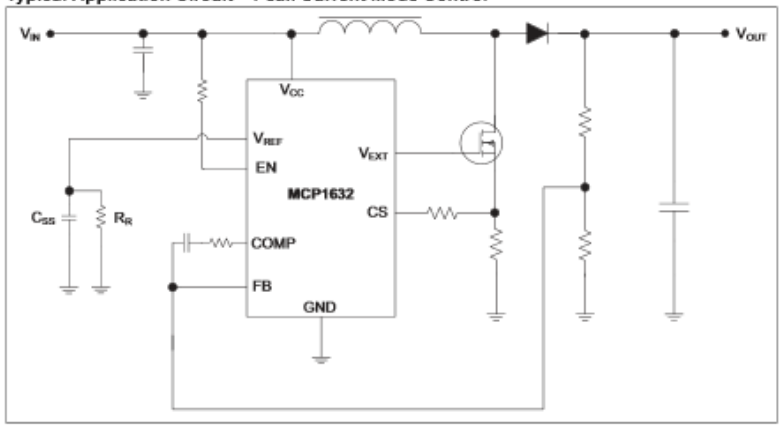

Typical Application Circuit – Voltage Mode Control

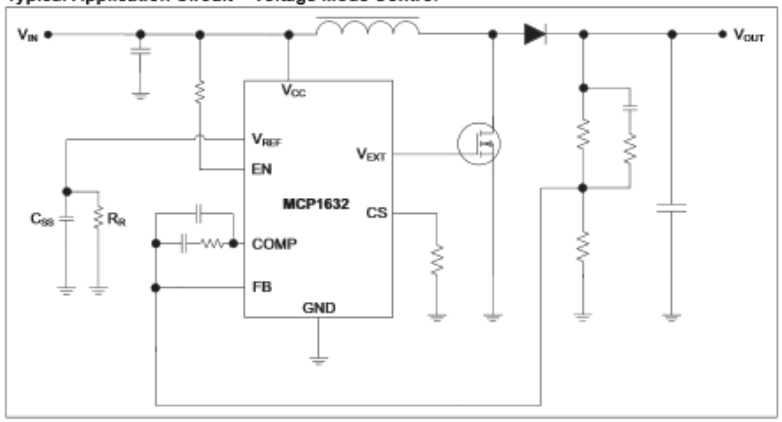

<< BACK

MCP19035

Online Datasheet

Features:

- Vin Range: 5.0V to 30.0V
- Voltage Mode Controller
- Switching Freq:
  - 300 kHz
  - 600 kHz
- Dead Time Options: 12ns/20ns
- Integrated Current limit
- Integrated MOSFET Driver
  - Logic-Level (5V) Drive
  - 1/2A – Source/Sink Drive Strength
- Over temperature Protection
- Package: 10-lead 3x3 DFN
- Extended Temperature Range: -40°C to +125°C

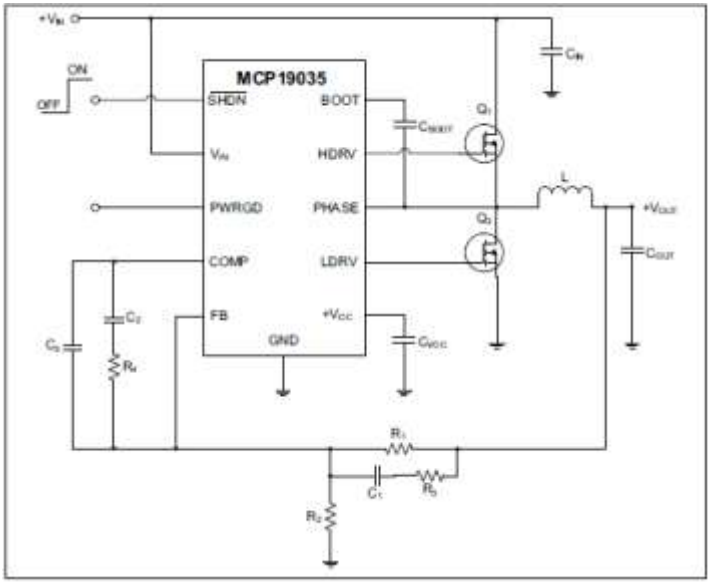

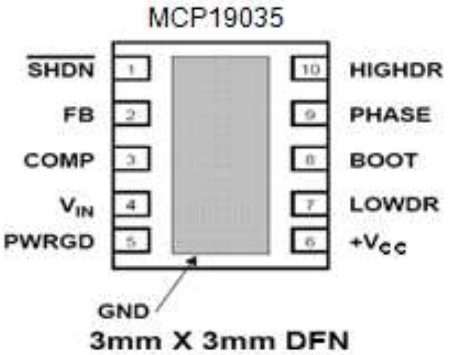

<< BACK

MCP19110/1

Online Datasheet

Features:

- Wide Operating Voltage Range: 4.5-32V
- Analog Peak-Current Mode PWM Control
- Integrated 8-Bit PIC® Microcontroller
- Significant Configurability: Adjustable Analog Compensation, Switching Frequency, MOSFET Deadtime, Etc...
- PMBUS® Compliant I2C Interface
- Integrated Synchronous High- and Low-Side MOSFET Drivers
- Integrated Current Sense
- Minimal External Components Needed
- Custom Algorithm Support
- Package:
  - MCP19110 – 24 lead 4x4 mm QFN
  - MCP19111 – 28 lead 5x5 mm QFN
- Extended Temperature Range: -40°C to +125°C

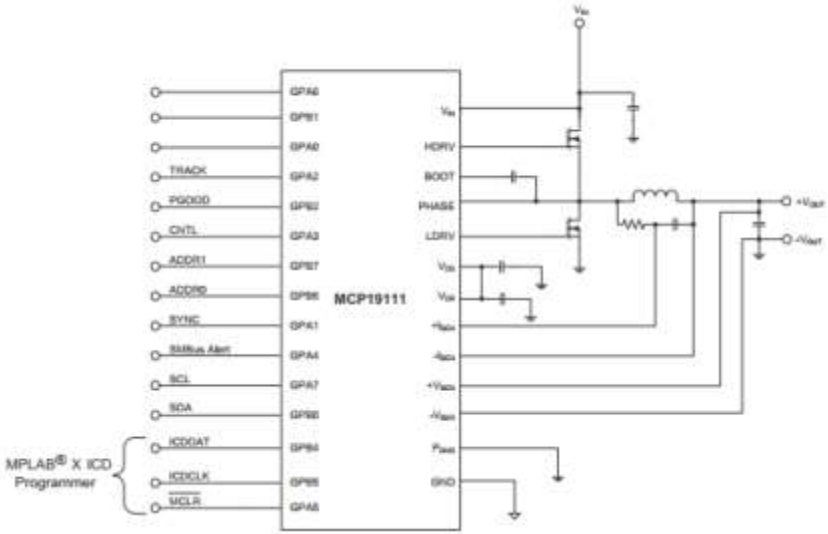

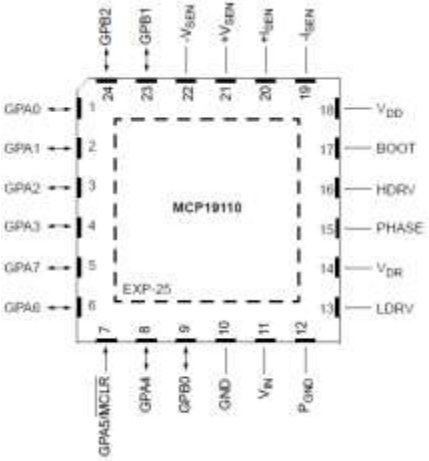

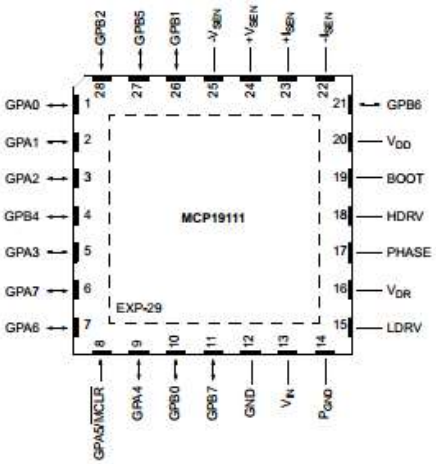

<< BACK

MCP19118/9

Online Datasheet

Features:

- Wide Operating Voltage Range: 4.5-40V
- Analog Peak-Current Mode PWM Control
- Integrated 8-Bit PIC® Microcontroller
- Significant Configurability: Adjustable Analog Compensation, Switching Frequency, MOSFET Deadtime, Etc...
- Integrated Synchronous High- and Low-Side MOSFET Drivers
- Integrated Current Sense
- Integrated 10 bit A/D Converter
- Minimal External Components Needed
- Custom Algorithm Support
- Package:
    - MCP19118 – 24 lead 4x4 mm QFN
    - MCP19119 – 28 lead 5x5 mm QFN
- Extended Temperature Range: -40°C to +125°C

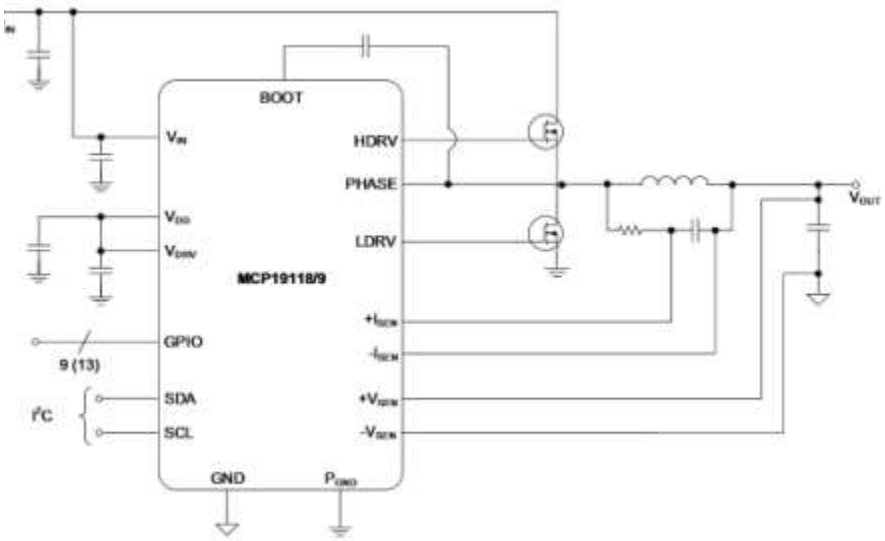

<< BACK

MCP19122/3

Online Datasheet

Features:

- V_{IN} range: 4.5V to 40V
  - 48V load dump capability
- Integrated MOSFET Driver:
  - Logic-level drive (5V)
  - 2A source/4A sink drive current
- Fully programmable (midrange core):
  - MPLABX support, GUI-configurable
  - 4k word flash, 256B RAM
  - Internal, adjustable compensation
  - Adjustable deadtime control
  - Switching freq: 100kHz to 1.6MHz
- 11/15 general purpose I/O
- PMBus™ / I²C™ compatible interface
- Low current (75 µA) sleep mode
- DC current measurement <5% Acc.
- Dual capture / compare module
- Master/Slave and multi-phase operation
- Package(s):
  - QFN 4x4mm – 24L
  - QFN 5x5mm – 28L

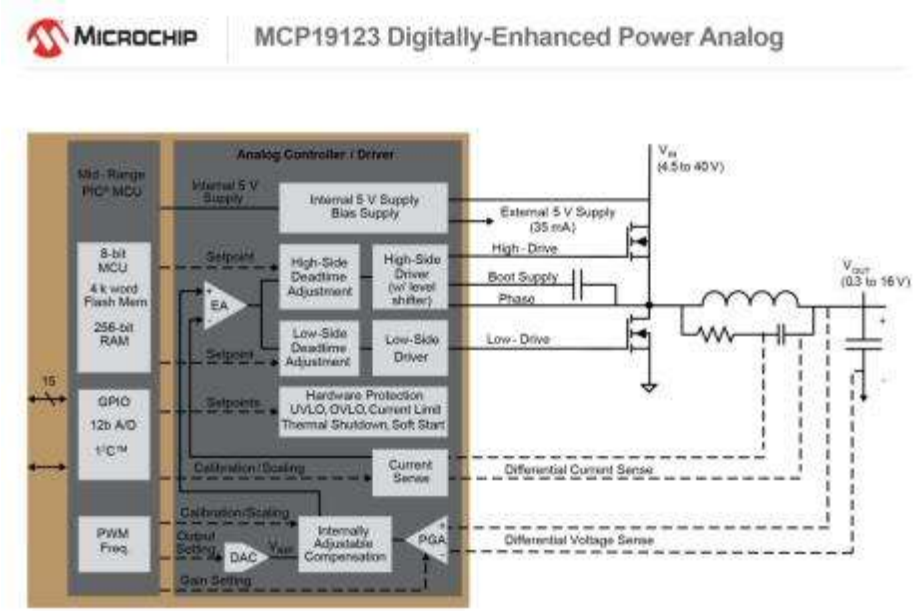

<< BACK

MCP19114/5

Online Datasheet

Features:

- Dual low-side gate drive outputs
- V_{IN} Range: 4.5V to 42.0V
- Switching Freq: 100kHz to 1MHz
  - Supports Quasi-Resonant Mode
- 5V LDO w/ 15mA auxiliary output
- Integrated, Low-Side MOSFET Driver
  - 1A Source, 1.5A Sink
  - Supports Flyback, SEPIC, Boost, and Ćuk Topologies.
- **Fully Programmable – Integrated PIC16 Core**
  - MPLABX Support, GUI-Configurable
  - 4k word Flash, 256b RAM
  - Adjustable Current limit/ULVO/OVLO/…
  - Up to 12 General Purpose I/O
  - I^2C^{TM} Communication Interface
- Operating Temperature: -40°C to +125°C
- Package(s): 24L QFN 4x4mm , 28L QFN 5x5mm

Sync. Flyback Topology

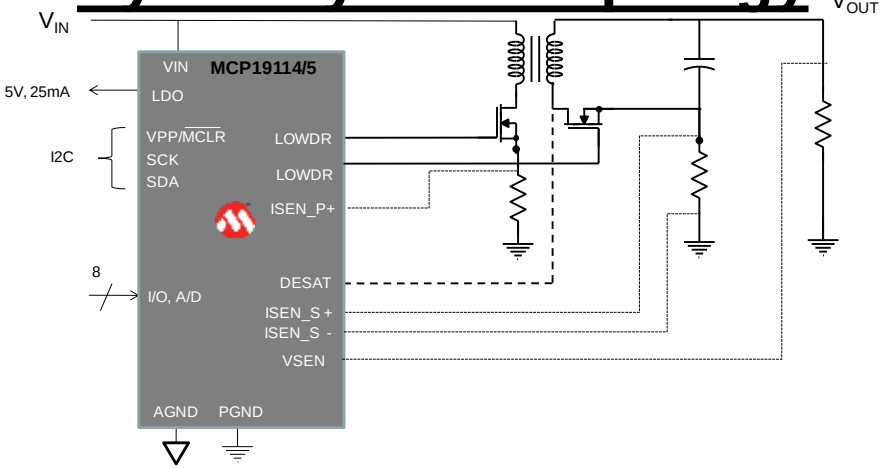

Boost Topology

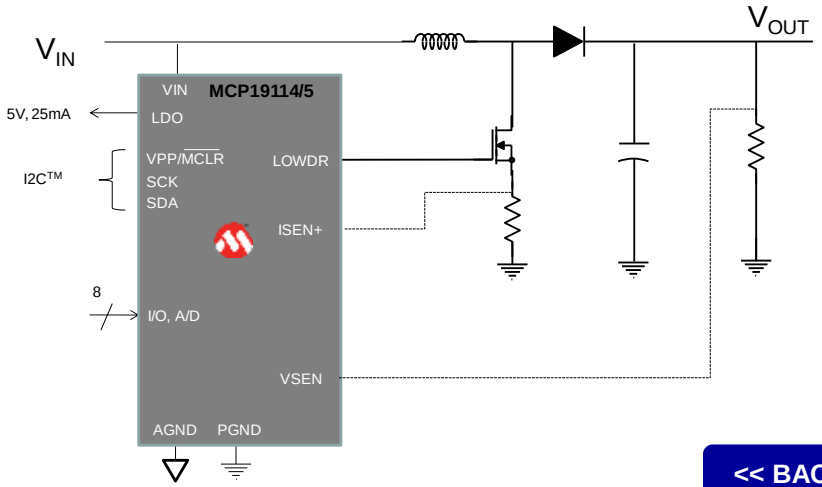

<< BACK

MCP19116/7

Online Datasheet

Key Features:

- Extremely accurate current regulation: ± 1% at 25C, ± 2.5% over full temperature for nominal current demand
- Capable of dynamic current output adjustments
- Dual low-side gate drive outputs; 1A source/sink
- Supports flyback, SEPIC, boost, and Ćuk topologies
- **Fully Programmable – Integrated mid-range PIC® core**
    - MPLABX Support, GUI-Configurable
    - 8k word Flash, 336B RAM
    - Up to 12 General Purpose I/O
    - I^2C^{TM} and USART Communication Interfaces
    - Optional debug interface (MCP19117 only)
- V_{IN} Range: 4.5V to 42.0V
- Switching Freq: 31kHz to 2.0MHz
    - Supports Quasi-Resonant Mode
- 5V LDO w/ 15mA auxiliary output
- Adjustable Current limit/ULVO/OVLO/thermal responses
- Operating Temperature: -40°C to +125°C
- Package(s): 24L QFN 4x4mm , 28L QFN 5x5mm

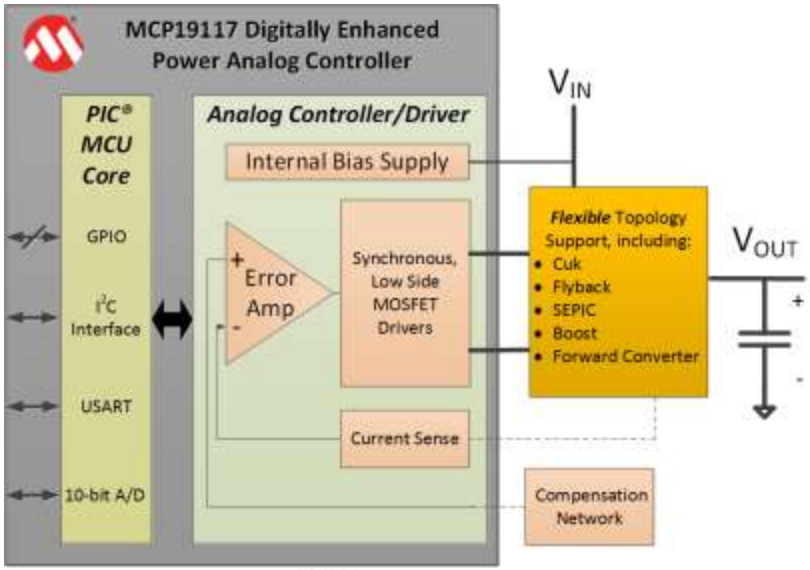

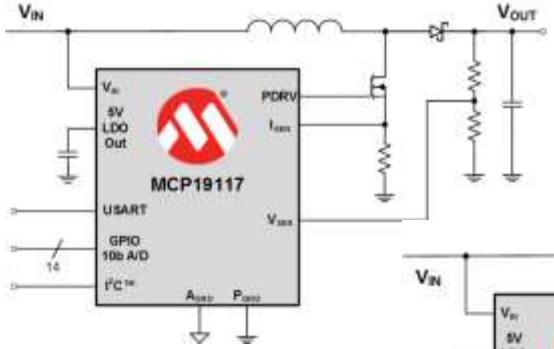

Boost

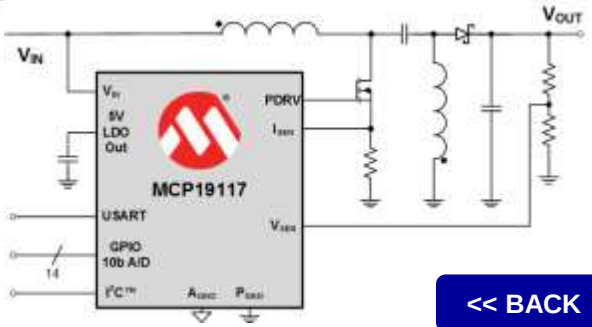

SEPIC

<< BACK

MCP19124/5

Synchronous Low-Side PWN Controller w/ Integrated MCU & MOSFET Driver

Online Datasheet

Key Features:

- VIN Range: 4.5V to 42.0V
    - 48V Load Dump Capability
- Switching Freq: 32kHz to 2MHz
- Integrated MOSFET Drivers, LDO
- External Compensation
- Two Independent Control Loops
    - Voltage control loop with Vref
    - Current control loop with Iref
- Fully Programmable
    - Integrated mid-range PIC core
    - MPLABX Support, GUI-Configurable
    - 4k word Flash, 256B RAM
    - Adjustable Current limit/ULVO/OVLO/Freq
    - Up to 13 General Purpose I/O
    - I2C Communication Interface
- Operating Temperature: -40°C to +125°C
- 24L 4x4mm QFN and 28L 5x5mm QFN packages

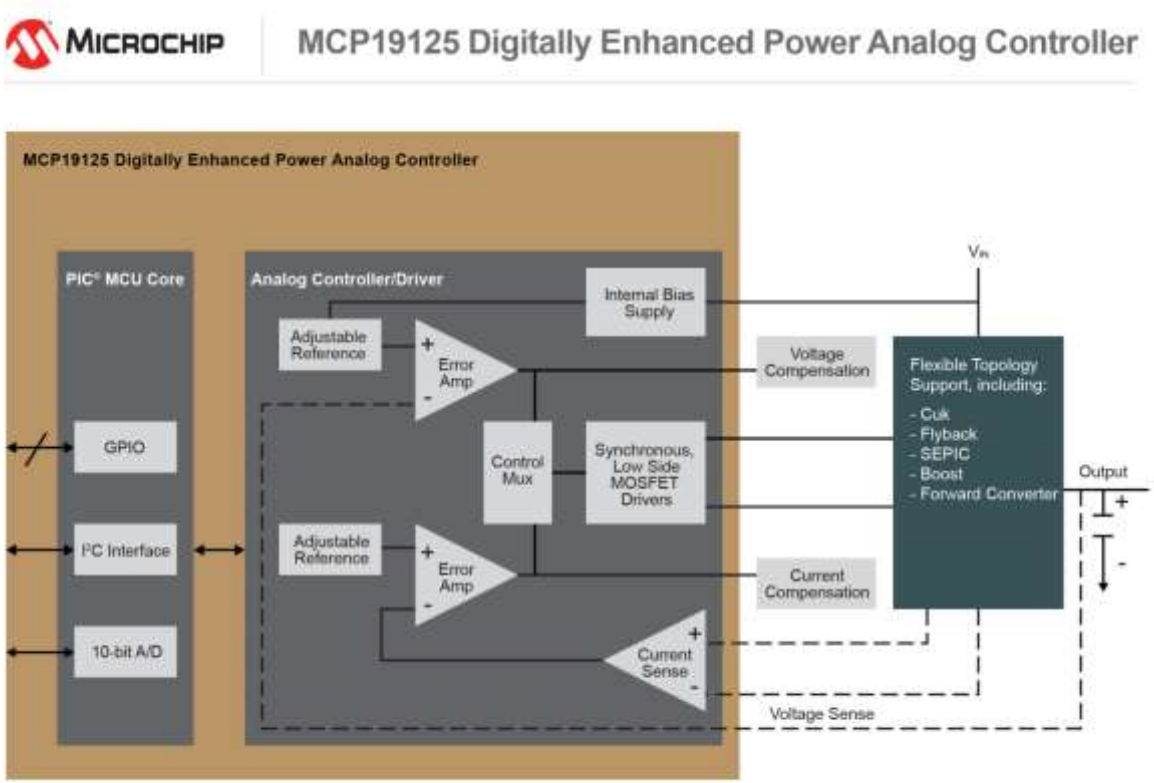

<< BACK

MCP19214/5

Online Datasheet

Features:

- Dual Channel Control and Drive
- V_{IN} Range: 4.5V to 42.0V:
  - 48V Load Dump Capability
- Integrated MOSFET Drivers
- Fixed Switching Freq: 100kHz to 2.0MHz
- Fully Programmable *(per channel):*
  - Integrated PIC12F (mid-range) Core
  - MPLABX Support, GUI-Configurable
  - 8k word Flash, 336B RAM
  - Current limit/ULVO/OVLO/fault protection
- Up to 12 General Purpose I/O
- I^2C^{TM} and UART Communication Interfaces
- Low current sleep mode
- Operating Temperature: -40°C to +125°C
- Package:
  - QFN 5x5mm – 28L
  - QFN 5x5mm – 32L

MCP19214/5 Dual LED Driver

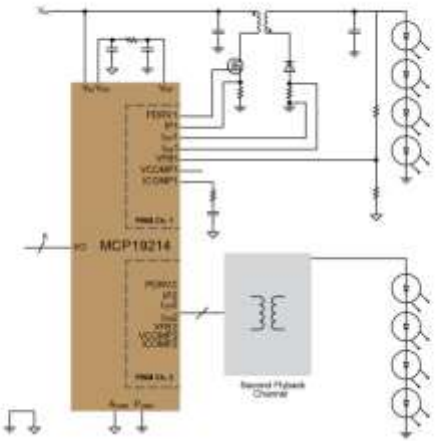

MCP19214/5 Bidirectional Converter

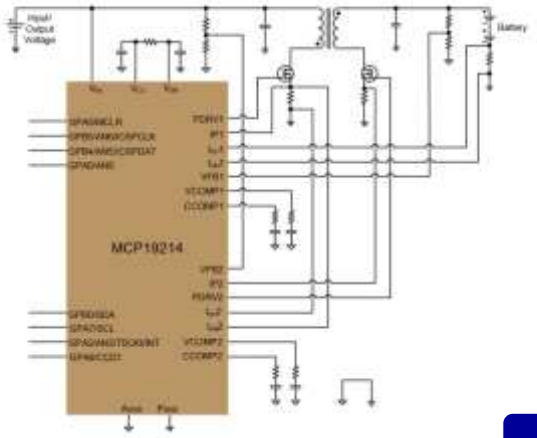

<< BACK

MCP1623/24

Online Datasheet

Features:

- Up to 96% Typical Efficiency
- 425 mA Typical Peak Input Current Limit:
  - I_{OUT} > 50 mA @ 1.2V V_{IN}, 3.3V V_{OUT}
  - I_{OUT} > 175 mA @ 2.4V V_{IN}, 3.3V V_{OUT}
  - I_{OUT} > 175 mA @ 3.3V V_{IN}, 5.0V V_{OUT}
- Low Start-up Voltage: 0.65V, typical 3.3V V_{OUT} @ 1 mA
- Low Operating Input Voltage: 0.35V, typ. 3.3V V_{OUT} @ 1 mA
- Adjustable Output Voltage Range: 2.0V to 5.5V
- Maximum Input Voltage: V_{OUT} < 5.5V
- Automatic PFM/PWM Operation (MCP1624):
  - PFM Only Operation (MCP1623)
  - 500 kHz PWM Operation
- Low Device Quiescent Current: 19 µA, typ. PFM Mode
- Internal Synchronous Rectifier
- Internal Compensation
- Inrush Current Limiting and Internal Soft-Start
- Shutdown Current: < 1 µA
- Low Noise, Anti-Ringing Control
- Over temperature Protection
- Available Packages: SOT23-6, 2x3 8-Lead DFN

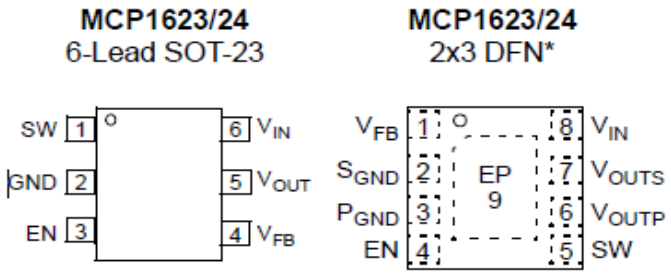

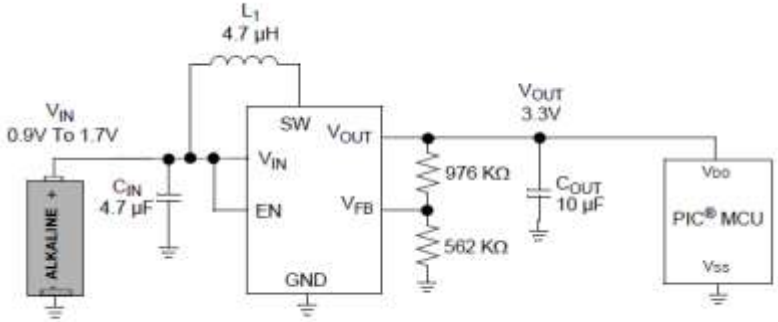

<< BACK

MCP1640/40B/40C/40D

Online Datasheet

Features:

- Up to 96% Typical Efficiency
- 800 mA Typical Peak Input Current Limit:
  - I_{OUT} > 100 mA @ 1.2V V_{IN}, 3.3V V_{OUT}
  - I_{OUT} > 350 mA @ 2.4V V_{IN}, 3.3V V_{OUT}
  - I_{OUT} > 350 mA @ 3.3V V_{IN}, 5.0V V_{OUT}
- Low Start-up Voltage: 0.65V, typical 3.3V V_{OUT} @ 1 mA
- Low Operating Input Voltage: 0.35V, typ. 3.3V V_{OUT} @ 1 mA
- Adjustable Output Voltage Range: 2.0V to 5.5V
- Maximum Input Voltage: V_{OUT} < 5.5V
- Automatic PFM/PWM Operation (MCP1640/C):
  - PFM Operation Disabled (MCP1640B/D)
  - PWM Operation: 500 kHz
- Low Device Quiescent Current: 19 µA, typ. PFM Mode
- Internal Synchronous Rectifier
- Internal Compensation
- Inrush Current Limiting and Internal Soft-Start
- Selectable, Logic Controlled, Shutdown States:
  - True Load Disconnect Option (MCP1640/B)
  - Input to Output Bypass Option (MCP1640C/D)
- Shutdown Current (All States): < 1 µA
- Low Noise, Anti-Ringing Control
- Over temperature Protection
- Available Packages: SOT23-6, - 2x3 8-Lead DFN

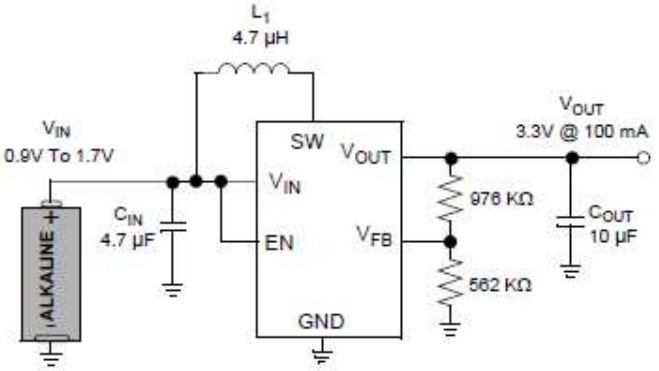

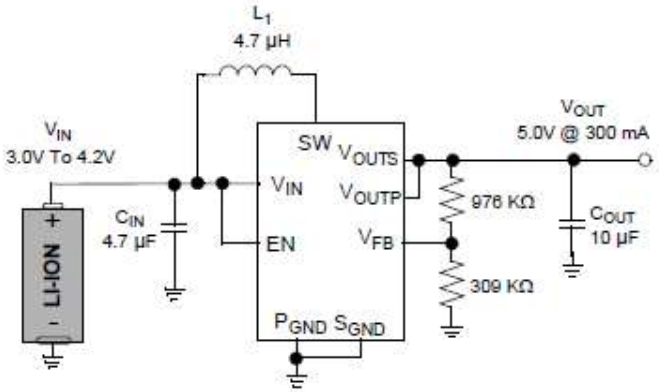

<< BACK

MCP1642B/D

Online Datasheet

Features:

- Up to 96% Typical Efficiency
- 1.8A Typical Peak Input Current Limit
- Up to 550 mA LED Load Current
- Low Start-up Voltage: 0.65V
- Low Operating Input Voltage: down to 0.35V
- Output Voltage Range:
  - Reference Voltage, VFB = 1.21V
  - 1.8V to 5.5V for adjustable version
  - 1.8V, 3.0V, 3.3V and 5.0V fixed options
- Max Input Voltage ≤Vout<5.5V
- PWM Operation: 1 MHz
- Power Good Open-Drain Output
- Internal Synchronous Rectifier
- Internal Compensation
- Selectable, Logic-Controlled Shutdown States:
  - True Load Disconnect: MCP1642B
  - Input-to-Output Bypass: MCP1642D
- Shutdown Current: 1 µA
- Inrush Current Limiting and Internal Soft-Start
- Packages: MSOP-8, 2x3 DFN-8

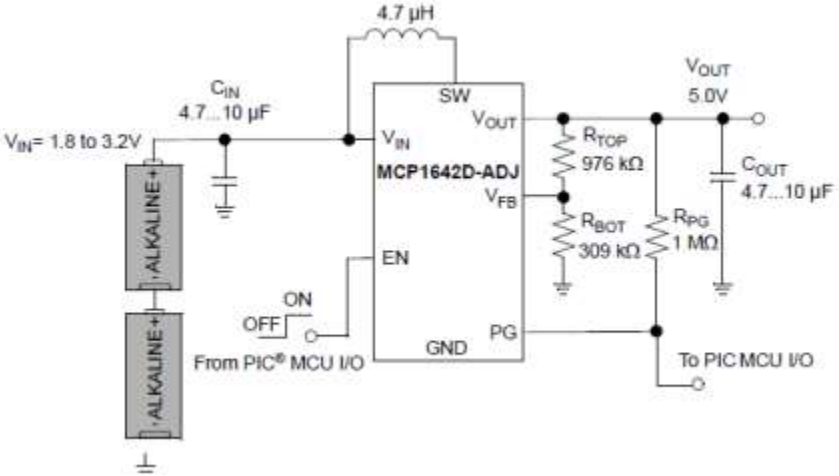

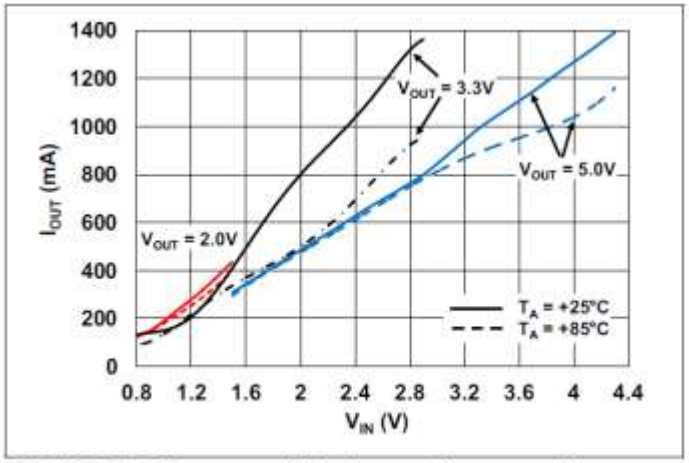

FIGURE 2-7: Maximum I_{OUT} vs. V_{IN}.

<< BACK

MCP1663

Online Datasheet

Features:

- Up to 92% Efficiency
- High Output Voltage Range: up to 32V
- 1.8A Peak Input Current Limit:
- Input Voltage Range: 2.4V to 5.5V
- Undervoltage Lockout (UVLO)
- No Load Input Current: 250 µA, typical
- Sleep mode with 200 nA Typical Quiescent Current
- PWM Operation with Skip mode: 500 kHz
- Feedback Voltage Reference: VFB= 1.227V
- Cycle-by-Cycle Current Limiting
- Internal Compensation
- Inrush Current Limiting & Internal Soft-Start
- Output Overvoltage Protection (OVP):
    - Feedback pin shorted to GND
    - Disconnected feedback divider
- Overtemperature Protection
- Easily Configurable for SEPIC or Flyback Topologies
- Packages: 5-Lead SOT-23, 2x3 8-Lead TDFN

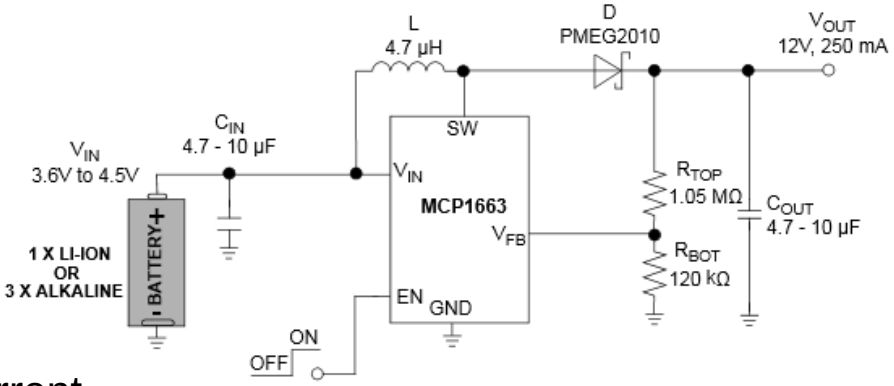

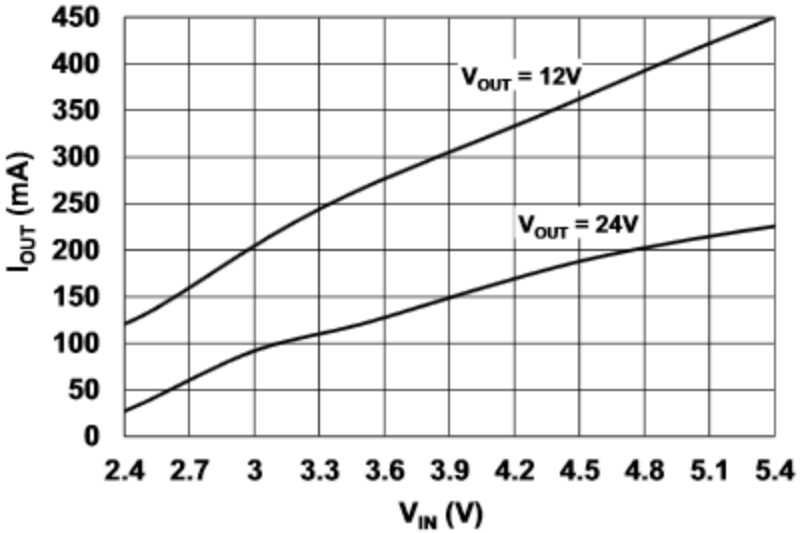

Maximum Output Current vs. Input Voltage

<< BACK

MCP1643
1.6A LED Driver

Online Datasheet

Features:

- 1.6A Typical Peak Input Current Limit
- Up to 550 mA LED Load Current
- Low Start-up Voltage: 0.65V (typical, 25 mA LED Current)
- Low Operating Input Voltage: down to 0.5V
- Maximum Input Voltage < VLED<5.0V
- Maximum Output Voltage: 5.0V
- Overvoltage Protection
- Low Reference Voltage: VFB= 120 mV
- Pulse-Width Modulation Mode Operation (1 MHz)
- Internal Synchronous Rectifier
- Internal Compensation
- Inrush Current Limiting
- Internal Soft-Start (240 µs typical)
- Shutdown (EN = GND): True Load Disconnect
- Dimming Control by Variable Duty Cycle
- Shutdown Current: 1.2 µA (typical)
- Overtemperature protection
- Packages: MSOP-8, 2x3 DFN-8

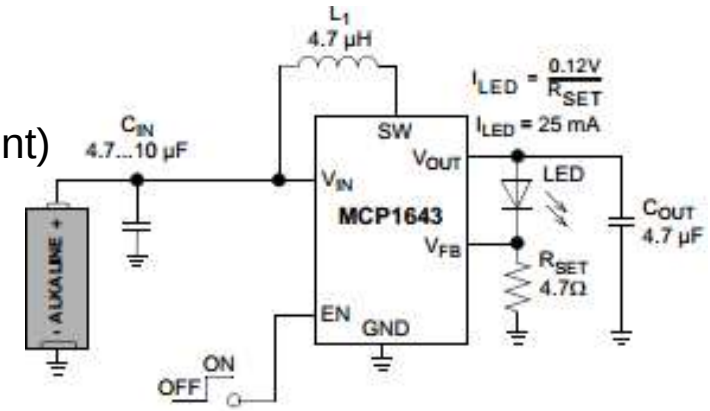

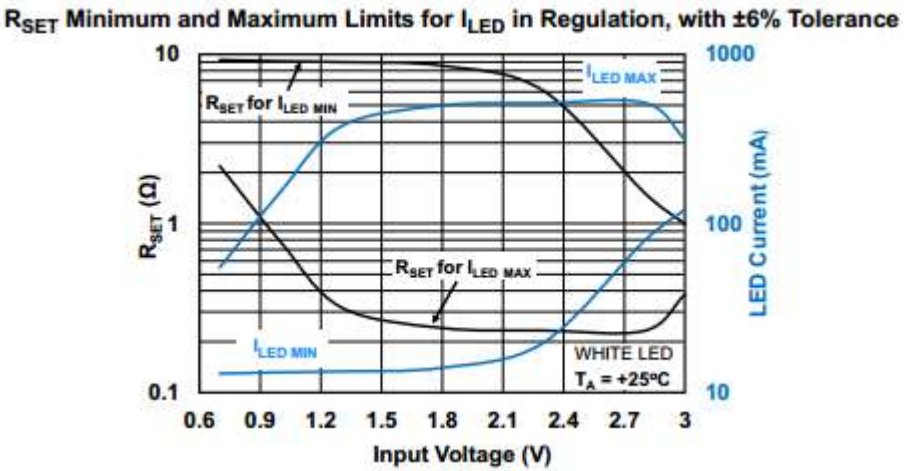

<< BACK

MCP16251/2

Online Datasheet

Features:

- Up to 96% Typical Efficiency
- 650mA Typical Peak Input Current Limit:
  - -IOUT > 100 mA @ 3.3V VOUT, 1.2V VIN
  - -IOUT > 250 mA @ 3.3V VOUT, 2.4V VIN
  - -IOUT > 225 mA @ 5.0V VOUT, 3.3V VIN
- Low Device Quiescent Current:
  - -Output Quiescent Current: < 4 µA typical
- Shutdown Current: 0.6 µA typical
- Low Start-up Voltage: 0.82V, 1 mA load
- Low Operating Input Voltage: down to 0.35V
- Adjustable Output Voltage Range: 1.8V to 5.5V
- Maximum Input Voltage ≤ VOUT < 5.5V
- Automatic PFM/PWM Operation:
  - -PWM Operation: 500 kHz
  - -PFM Output Ripple: 150 mV typical
- Internal Synchronous Rectifier
- Internal Compensation
- Inrush Current Limiting and Internal Soft Start (1.5 ms typical)
- Selectable, Logic Controlled, Shutdown States:

-True Load Disconnect Option (MCP16251)

-Input to Output Bypass Option (MCP16252)

- Anti-Ringing Control, Overtemperature Protection
- Available Packages:SOT-23-6, 2x 3 8-Lead TDFN

MCP16251/2
6-Lead SOT-23

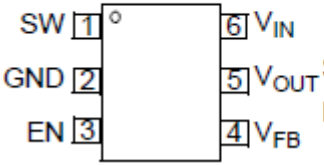

MCP16251/2
2x3 TDFN*

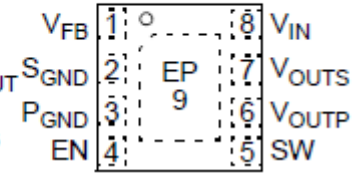

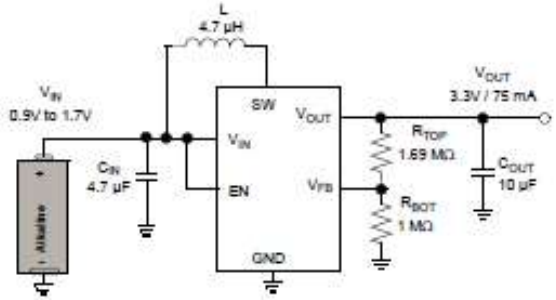

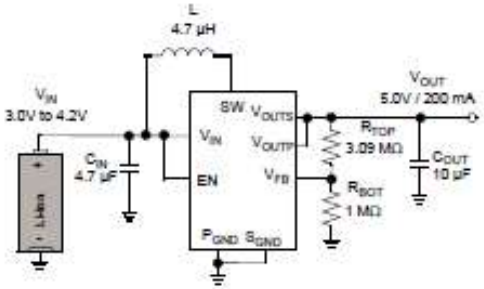

<< BACK

MCP16301/H

Online Datasheet

Features:

- Up to 96% Typical Efficiency
- Input Voltage Range:
  - 4.0V to 30V (MCP16301)
  - 4.7V to 36V (MCP16301H)
- Output Voltage Range: 2.0V to 15V
- 2% Output Voltage Accuracy
- Integrated N-Channel Buck Switch
- 600 mA Output Current
- 500 kHz Fixed Frequency
- Adjustable Output Voltage
- Low Device Shutdown Current
- Peak Current Mode Control
- Internal Compensation
- Stable with Ceramic Capacitors
- Internal Soft-Start
- Cycle by Cycle Peak Current Limit
- Under Voltage Lockout (UVLO): 3.5V
- Overtemperature Protection
- SOT-23-6 Package
- Temperature Range: -40°C to +85°C

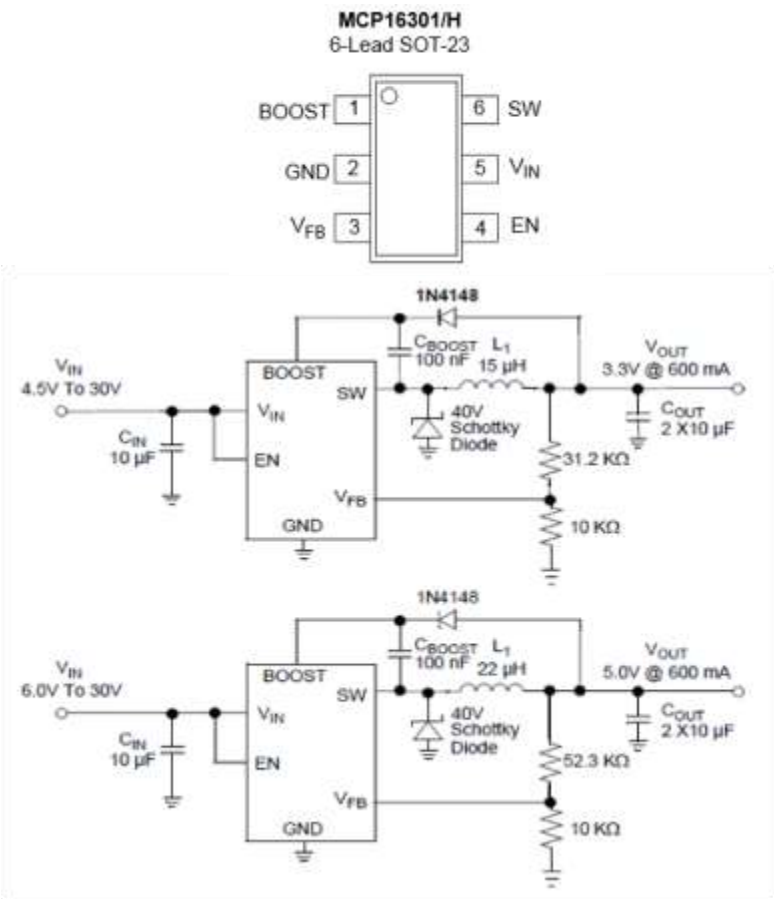

<< BACK

MCP1630/V

Online Datasheet

Features:

- High-Speed PWM Operation (12ns Current Sense to Output Delay)
- Operating Temperature Range: -40°C to +125°C
- Precise Peak Current Limit (±5% MCP1630)
- Voltage Mode and Average Current Mode Control (MCP1630V)
- CMOS Output Driver
- External Oscillator Input
- External voltage Reference Input
- Peak Current Mode Operation > 1MHz
- Low Operating Current: 2.8mA (typ.)
- Fast Output Rise and Fall Times: 5.9ns and 6.2ns
- Undervoltage Lockout (UVLO) Protection
- Output Short Circuit and Overtemperature Protection
- Space Saving 8-Pin MSOP

MCP1630 NiMH Battery Charger and Fuel Gauge Application Diagram

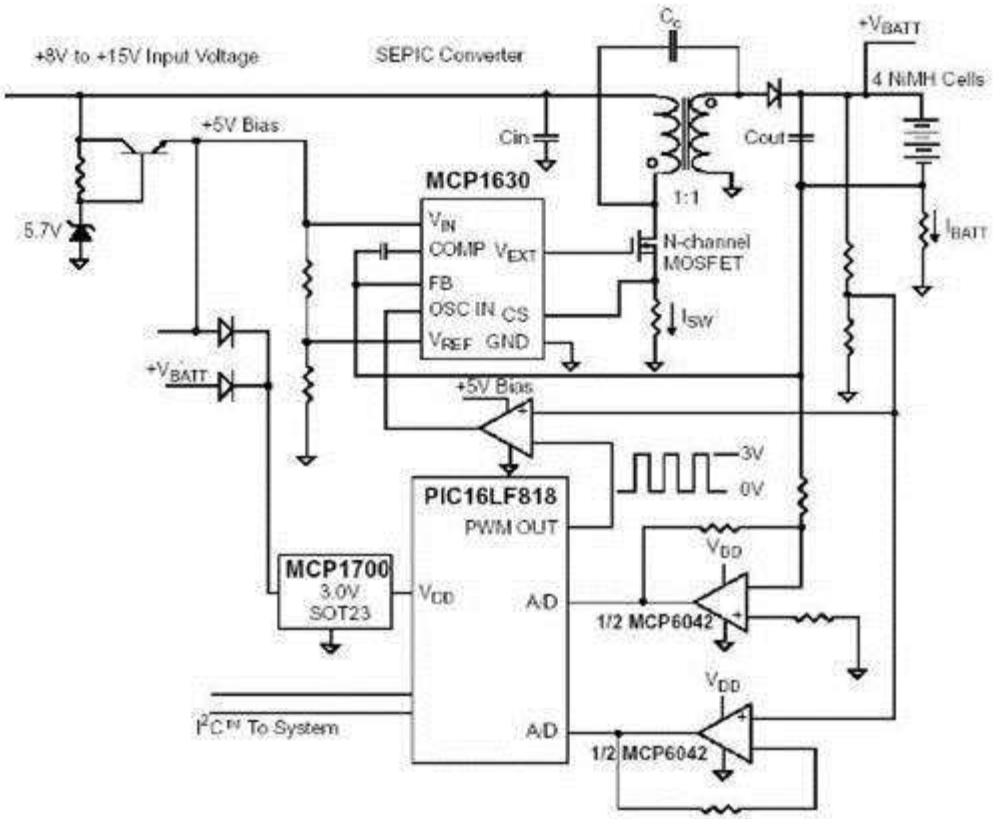

<< BACK

MCP1631/HV
MCP1631V/VHV

Online Datasheet

Features:

- Programmable Switching Battery Charger Designs
- High-Speed Analog PWM Controller: 2MHz
- Peak Current Mode Control (MCP1631)
- Voltage Mode Control (MCP1631V)
- High Voltage Options Operate to +16V Input:
  MCP1631HV Current Mode
  MCP1631VHV Voltage Mode
- Output Voltage Options: +5.0V or +3.3V, 250mA
- External Oscillator and Ext. Reference Inputs
- Error Amplifier, Battery Current I_{SNS} Amplifier, Battery Voltage V_{SNS} Amplifier Integrated
- Integrated Overvoltage Comparator
- Integrated Low Side MOSFET Driver: 1A Peak
- Shutdown mode reduces I_Q to 2.4µA (typ.)
- Internal Overtemperature Protection
- Undervoltage Lockout (UVLO)
- Package Options:
  4x4 20-Lead QFN (MCP1631/MCP1631V)
  20-Lead TSSOP, 20-Lead SSOP (all devices)

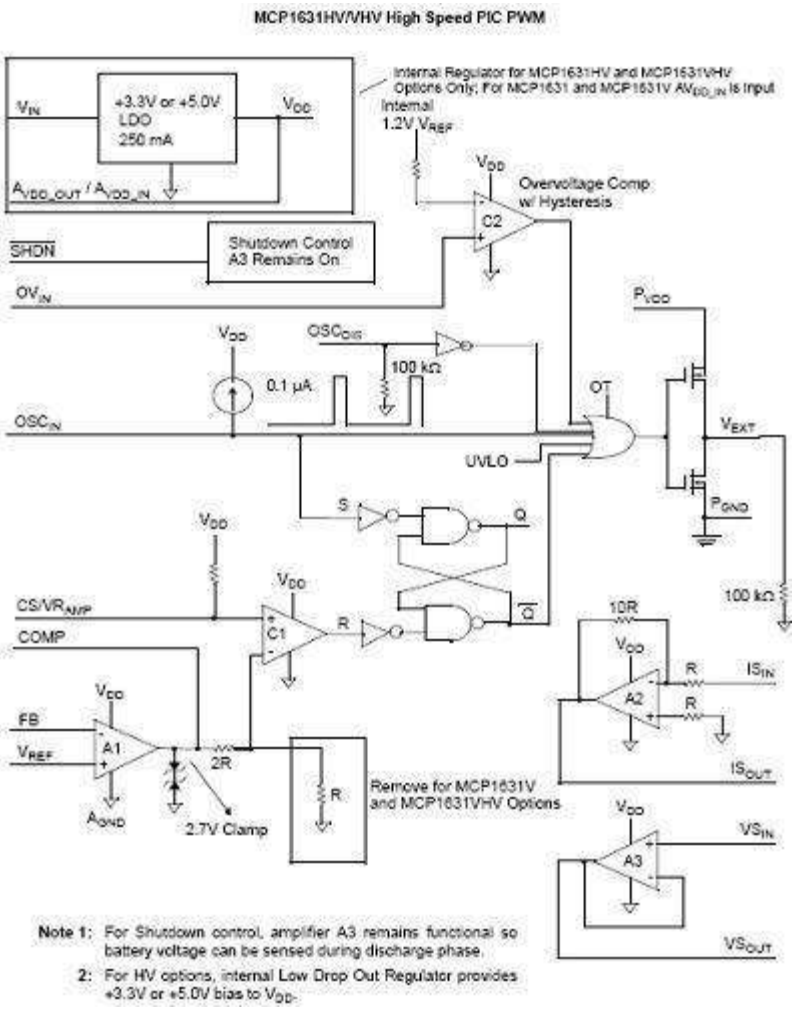

<< BACK

MCP1631/HV
MCP1631V/VHV

Online Datasheet

Features:

- Programmable Switching Battery Charger Designs
- High-Speed Analog PWM Controller: 2MHz
- Peak Current Mode Control (MCP1631)
- Voltage Mode Control (MCP1631V)
- High Voltage Options Operate to +16V Input:
  MCP1631HV Current Mode
  MCP1631VHV Voltage Mode
- Output Voltage Options: +5.0V or +3.3V, 250mA
- External Oscillator and Ext. Reference Inputs
- Error Amplifier, Battery Current I_{SNS} Amplifier, Battery Voltage V_{SNS} Amplifier Integrated
- Integrated Overvoltage Comparator
- Integrated Low Side MOSFET Driver: 1A Peak
- Shutdown mode reduces I_Q to 2.4µA (typ.)
- Internal Overtemperature Protection
- Undervoltage Lockout (UVLO)
- Package Options:
  4x4 20-Lead QFN (MCP1631/MCP1631V)
  20-Lead TSSOP, 20-Lead SSOP (all devices)

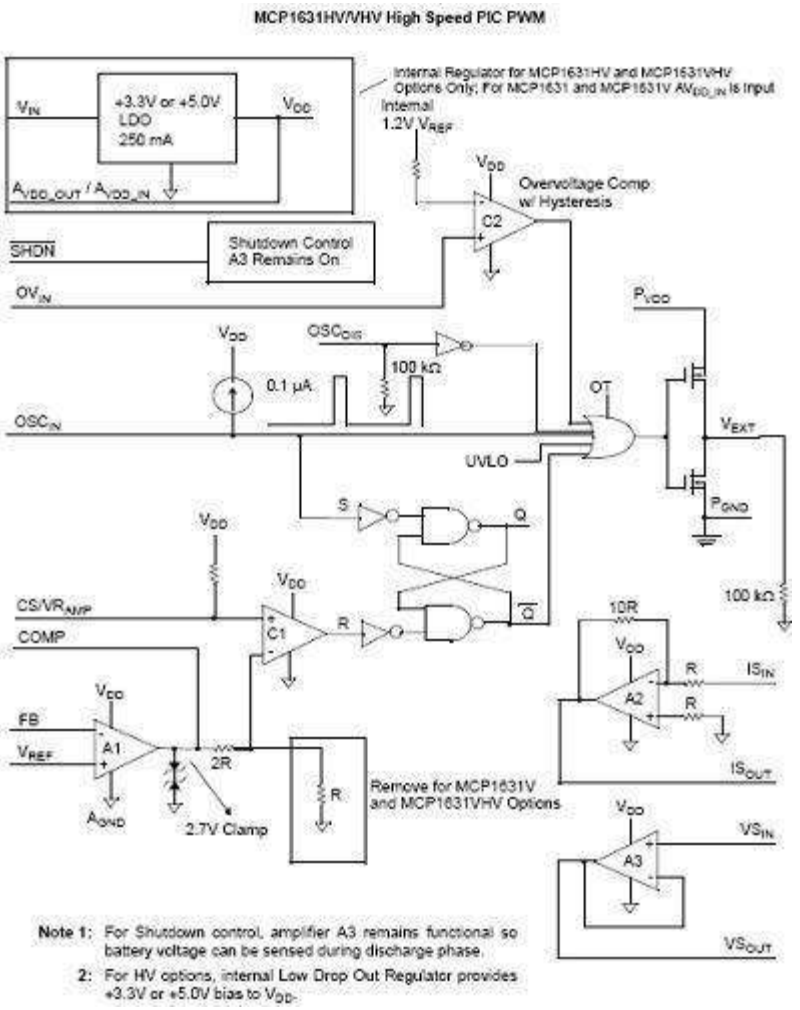

<< BACK

TCM809/810

Online Datasheet

Features:

- Precision VCC Monitor for 2.5V, 3.0V, 3.3V, 5.0V Nominal Voltage Supplies
- 140ms Minimum RESET Time Out Period
- RESET Output Guaranteed to V_{CC} = 1.0V (TCM809)
- Low 12µA Supply Current
- Push-Pull RESET Output
- No External Components
- Temperature Range:
  Industrial SC-70 (E): -40°C to +85°C
  Extended SOT-23 (V): -40°C to +125°C

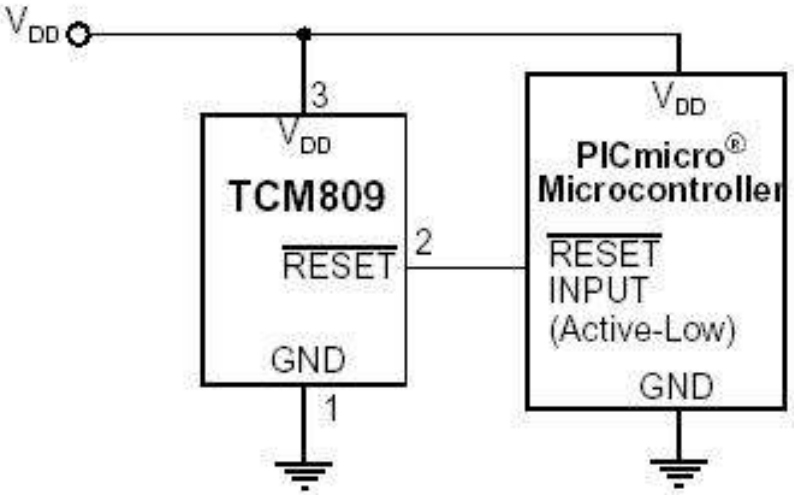

<< BACK

TCM809/810

Online Datasheet

Features:

- Precision VCC Monitor for 2.5V, 3.0V, 3.3V, 5.0V Nominal Voltage Supplies
- 140ms Minimum RESET Time Out Period
- RESET Output Guaranteed to V_{CC} = 1.0V (TCM809)
- Low 12µA Supply Current
- Push-Pull RESET Output
- No External Components
- Temperature Range:
  Industrial SC-70 (E): -40°C to +85°C
  Extended SOT-23 (V): -40°C to +125°C

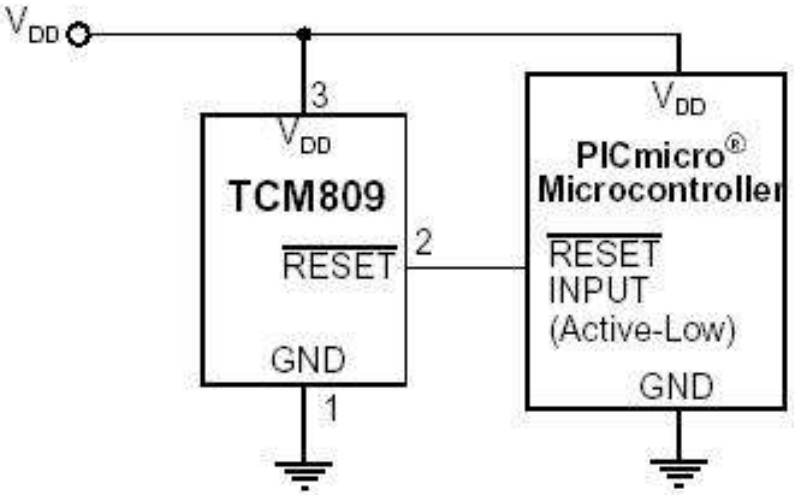

<< BACK

MCP809/810

Online Datasheet

Features:

- Holds microcontroller in reset until supply voltage reaches stable operating voltage
- Resets microcontroller during power loss
- Precision monitoring of 3V, 3.3V and 5V systems
- Active low RESET pin (MCP809)
- Active high RESET (MCP810)
- Push-pull output
- Holds RESET for 350ms (typical)
- RESET to VDD = 1.0V
- Accuracy:+(-)125mV for 5V systems
  +(-)75mV for 3V systems
- 45uA typical operating current
- Industrial Temperature Range: -40°C to +85°C

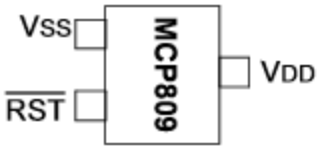

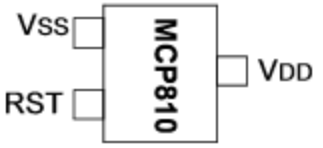

<< BACK

MCP809/810

Online Datasheet

Features:

- Holds microcontroller in reset until supply voltage reaches stable operating voltage
- Resets microcontroller during power loss
- Precision monitoring of 3V, 3.3V and 5V systems
- Active low RESET pin (MCP809)
- Active high RESET (MCP810)
- Push-pull output
- Holds RESET for 350ms (typical)
- RESET to VDD = 1.0V
- Accuracy:+(-)125mV for 5V systems
  +(-)75mV for 3V systems
- 45uA typical operating current
- Industrial Temperature Range: -40°C to +85°C

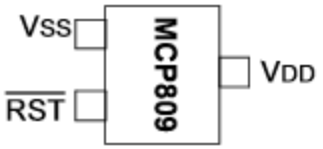

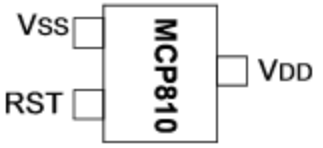

MCP809/810

Online Datasheet

Features:

- Holds microcontroller in reset until supply voltage reaches stable operating voltage
- Resets microcontroller during power loss
- Precision monitoring of 3V, 3.3V and 5V systems
- Active low RESET pin (MCP809)
- Active high RESET (MCP810)
- Push-pull output
- Holds RESET for 350ms (typical)
- RESET to VDD = 1.0V
- Accuracy:+(-)125mV for 5V systems
  +(-)75mV for 3V systems
- 45uA typical operating current
- Industrial Temperature Range: -40°C to +85°C

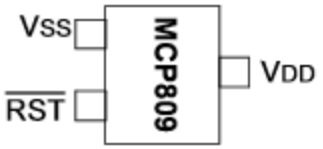

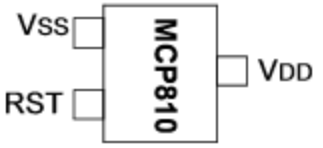

<< BACK

TC1272A

Online Datasheet

Features:

- Precision V_{DD} Monitor
- 140ms Minimum RESET Output Duration
- Output Valid to V_{DD} = 1.2V
- V_{DD} Transient Immunity
- Small 3-Pin SOT-23B Package
- No External Components

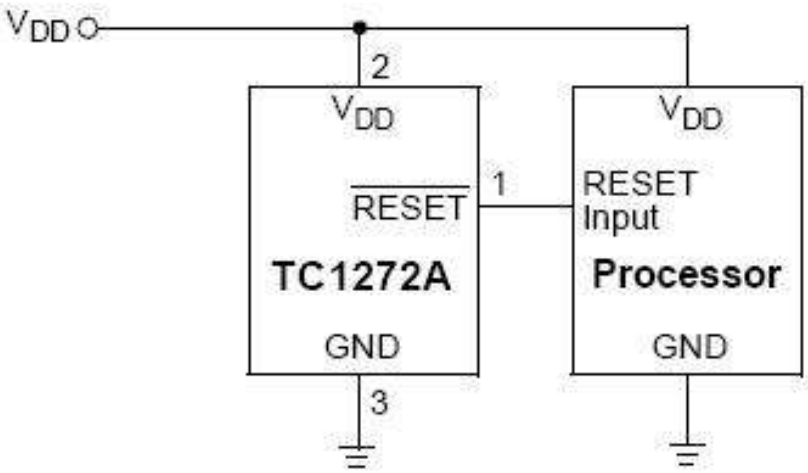

<< BACK

TC1270A/01A

Online Datasheet

Features:

- Precision Voltage Monitor: 2.63V, 2.93V, 3.08V, 4.38V and 4.63V trip points (typ.)
- Manual Reset input
- Reset Time-out Delay:
  Standard: 280ms (typ.)
  Optional: 2.19ms, and 35ms (typ.)
- Power Consumption ≤ 15µA (max.)
- Active Low Output Options:
  Push-Pull Output and Open-Drain Output
- Active High Output Option: Push-Pull Output
- Replacement for (Specification compatible):
  TC1270, TC1271, TCM811, TCM812
- Low Voltage Operation: (1.0V)
- ESD protection:
  ≥ 4kV Human Body Model (HBM)
  ≥ 400V Machine Model (MM)
- Extended (E) Temperature Range:
  -40°C to +125°C
- Package Options:
  4-lead SOT-143, 5-lead SOT-23

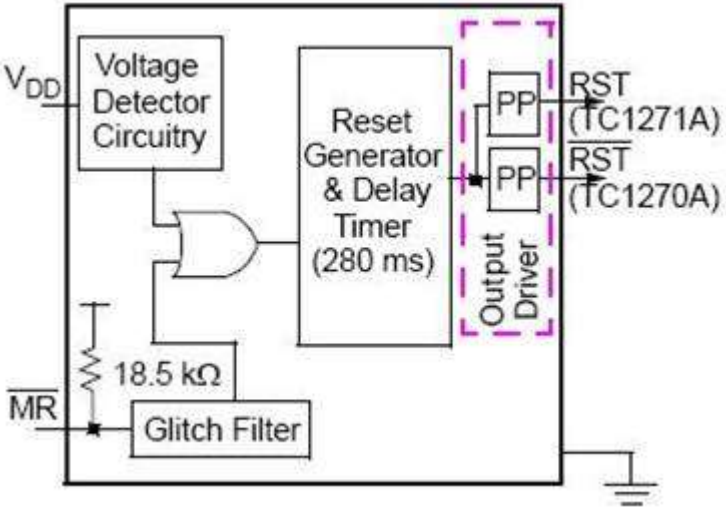

<< BACK

TC1270A/01A

Online Datasheet

Features:

- Precision Voltage Monitor: 2.63V, 2.93V, 3.08V, 4.38V and 4.63V trip points (typ.)
- Manual Reset input
- Reset Time-out Delay:
  Standard: 280ms (typ.)
  Optional: 2.19ms, and 35ms (typ.)
- Power Consumption ≤ 15µA (max.)
- Active Low Output Options:
  Push-Pull Output and Open-Drain Output
- Active High Output Option: Push-Pull Output
- Replacement for (Specification compatible):
  TC1270, TC1271, TCM811, TCM812
- Low Voltage Operation: (1.0V)
- ESD protection:
  ≥ 4kV Human Body Model (HBM)
  ≥ 400V Machine Model (MM)
- Extended (E) Temperature Range:
  -40°C to +125°C
- Package Options:
  4-lead SOT-143, 5-lead SOT-23

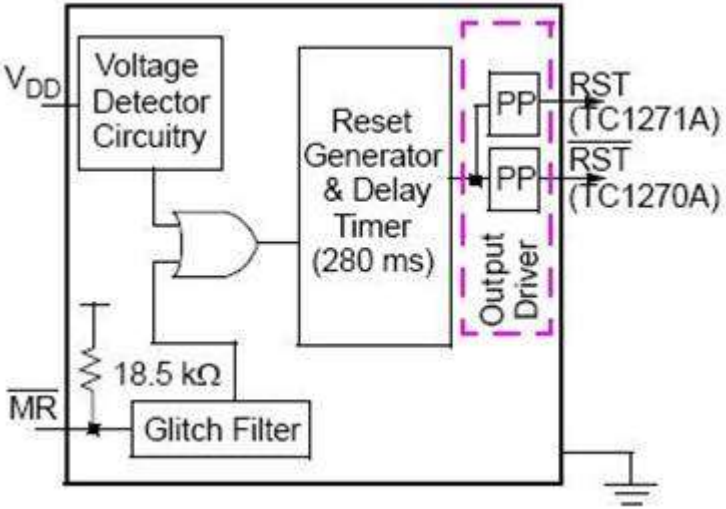

<< BACK

TC1270A/01A

Online Datasheet

Features:

- Precision Voltage Monitor: 2.63V, 2.93V, 3.08V, 4.38V and 4.63V trip points (typ.)
- Manual Reset input
- Reset Time-out Delay:
  Standard: 280ms (typ.)
  Optional: 2.19ms, and 35ms (typ.)
- Power Consumption ≤ 15µA (max.)
- Active Low Output Options:
  Push-Pull Output and Open-Drain Output
- Active High Output Option: Push-Pull Output
- Replacement for (Specification compatible):
  TC1270, TC1271, TCM811, TCM812
- Low Voltage Operation: (1.0V)
- ESD protection:
  ≥ 4kV Human Body Model (HBM)
  ≥ 400V Machine Model (MM)
- Extended (E) Temperature Range:
  -40°C to +125°C
- Package Options:
  4-lead SOT-143, 5-lead SOT-23

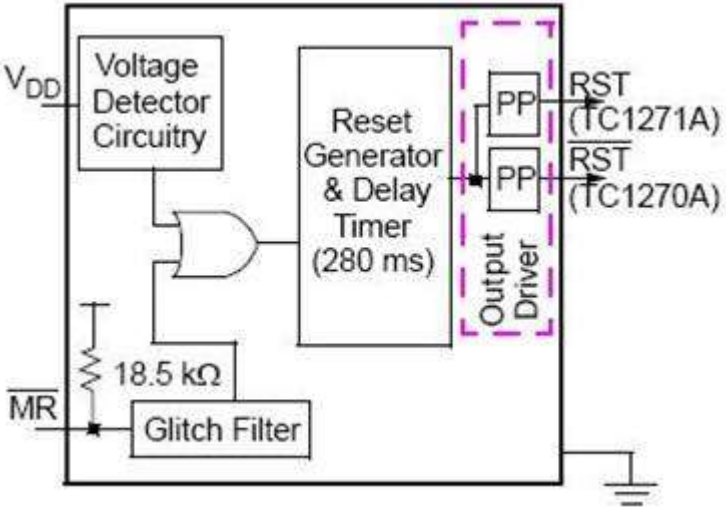

<< BACK

MCP100/101

Online Datasheet

Features:

- Holds Microcontroller in Reset until Supply Voltage Reaches Stable Operating Level
- Resets Microcontroller during Power Loss
- Precision Monitoring of 3.0V, 3.3V, and 5V
- Systems
- 7 Voltage Trip Points Available
- Active Low RESET Pin (MCP100) of Active high RESET (MCP101)
- Push-Pull Output
- Holds RESET'/RESET for 350ms (typ.)
- RESET'/RESET to V_{DD} = 1.0V
- Accuracy of ±125mV for 5V Systems and ±75mV for 3V Systems Over Temperature
- 45µA Typical Operating Current
- Temperature Range: -40°C to +85°C

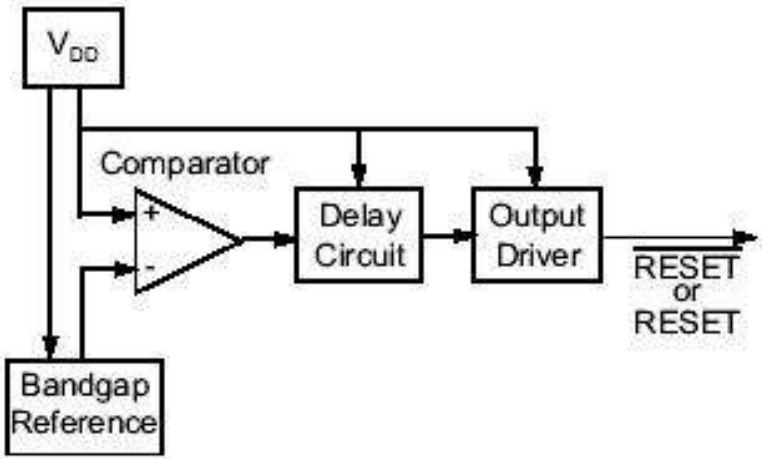

<< BACK

MCP100/101

Online Datasheet

Features:

- Holds Microcontroller in Reset until Supply Voltage Reaches Stable Operating Level
- Resets Microcontroller during Power Loss
- Precision Monitoring of 3.0V, 3.3V, and 5V
- Systems
- 7 Voltage Trip Points Available
- Active Low RESET Pin (MCP100) of Active high RESET (MCP101)
- Push-Pull Output
- Holds RESET'/RESET for 350ms (typ.)
- RESET'/RESET to V_{DD} = 1.0V
- Accuracy of ±125mV for 5V Systems and ±75mV for 3V Systems Over Temperature
- 45µA Typical Operating Current
- Temperature Range: -40°C to +85°C

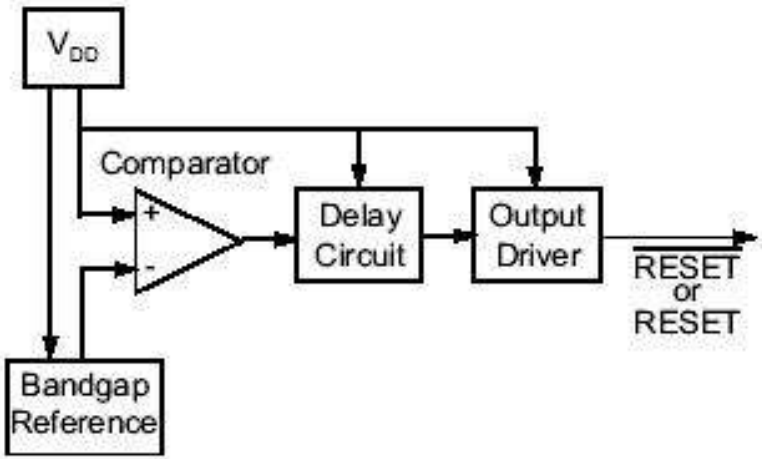

<< BACK

MCP120/130

Online Datasheet

Features:

- Holds Microcontroller in Reset until Supply Voltage Reaches Stable Operating Level
- Resets Microcontroller during Power Loss
- Precision Monitoring of 3.0V, 3.3V, and 5V Systems
- 7 Voltage Trip Points Available
- Active Low RESET Pin
- Open Drain Output
- Internal Pull-Up Resistor: 5kΩ (MCP130)
- Holds RESET for 350ms (typ.)
- RESET to V_{DD} = 1.0V
- Accuracy of ±125mV for 5V Systems and ±75mV for 3V Systems Over Temperature
- 45µA (typ.) Operating Current
- Temperature Range: -40°C to +85°C

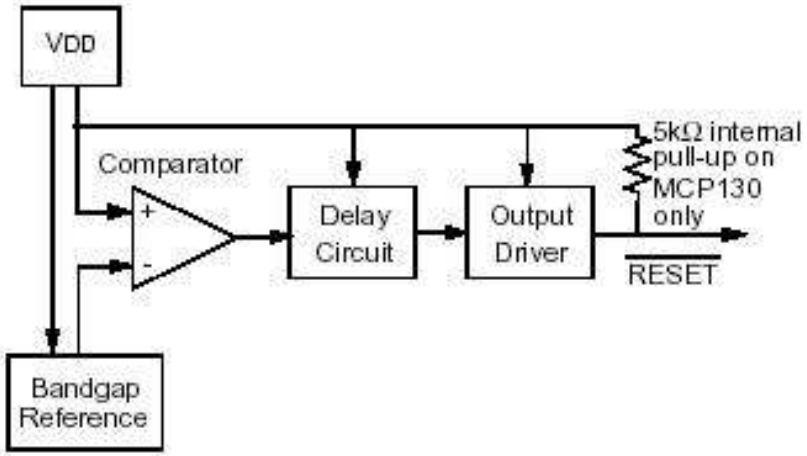

<< BACK

MCP102/103/121/131

Online Datasheet

Features:

- Ultra Low Supply Current: 1.75µA (max.)
- Precision Monitoring of: 1.90V, 2.32V, 2.63V, 2.93V, 3.08V, 4.38V and 4.63V
- Resets Microcontroller during Power Loss
- Active Low RESET Pin
  MCP121: Active-Low, Open-Drain
  MCP131: Active-Low, Open-Drain with Internal Pull-Up Resistor
  MCP102 and MCP103: Active-Low, Push-Pull
- Reset Delay Timer: 120ms Delay (typ.)
- Space Saving SOT-23-3, TO-92 and SC70 Packages
- Temperature Range:
  -40°C to +125°C (except MCP1xx-195)
  -40°C to +85°C

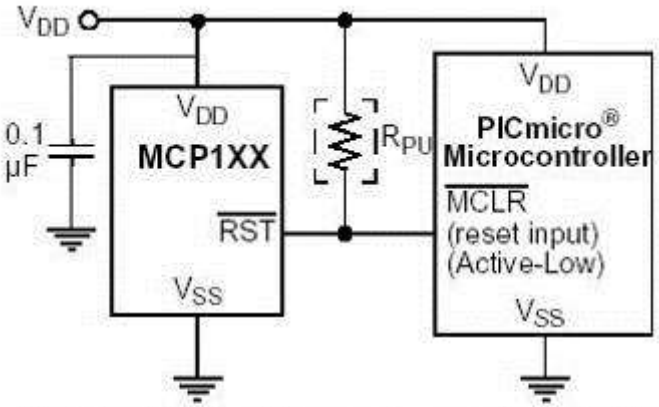

Note 1: Resistor R_{PU} may be required with the MCP121 due to the open-drain output. Resistor R_{PU} may not be required with the MCP131 due to the internal pull-up resistor. The MCP102 and MCP103 do not require the external pull-up resistor.

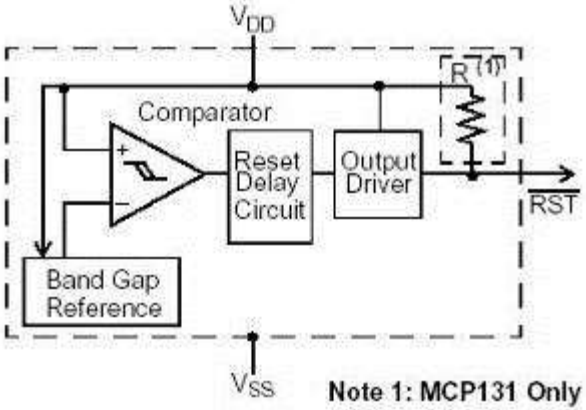

Note 1: MCP131 Only

<< BACK

MCP102/103/121/131

Online Datasheet

Features:

- Ultra Low Supply Current: 1.75µA (max.)
- Precision Monitoring of: 1.90V, 2.32V, 2.63V, 2.93V, 3.08V, 4.38V and 4.63V
- Resets Microcontroller during Power Loss
- Active Low RESET Pin
  MCP121: Active-Low, Open-Drain
  MCP131: Active-Low, Open-Drain with Internal Pull-Up Resistor
  MCP102 and MCP103: Active-Low, Push-Pull
- Reset Delay Timer: 120ms Delay (typ.)
- Space Saving SOT-23-3, TO-92 and SC70 Packages
- Temperature Range:
  -40°C to +125°C (except MCP1xx-195)
  -40°C to +85°C

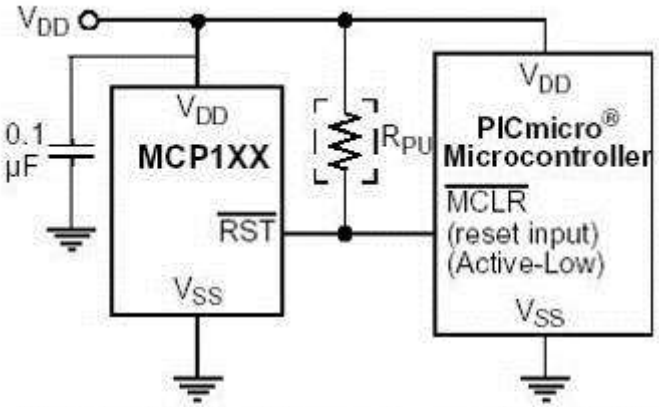

Note 1: Resistor R_{PU} may be required with the MCP121 due to the open-drain output. Resistor R_{PU} may not be required with the MCP131 due to the internal pull-up resistor. The MCP102 and MCP103 do not require the external pull-up resistor.

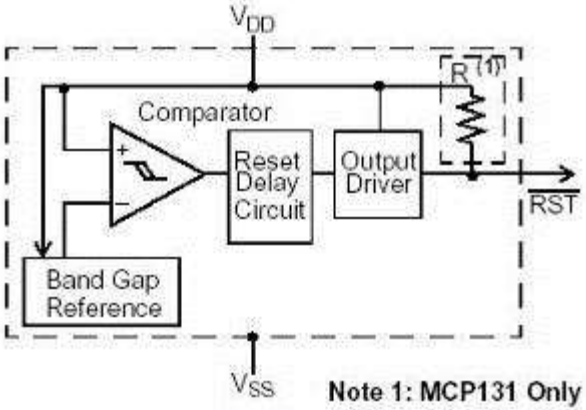

Note 1: MCP131 Only

<< BACK

TC1232

Online Datasheet

Features:

- Precision Voltage Monitor: Adjustable +4.5V or +4.75V
- Reset Pulse Width: 250ms (min.)
- No External Components
- Adjustable Watchdog Timer: 150ms, 600ms or 1.2s
- Debounced Manual Reset Input for External Override

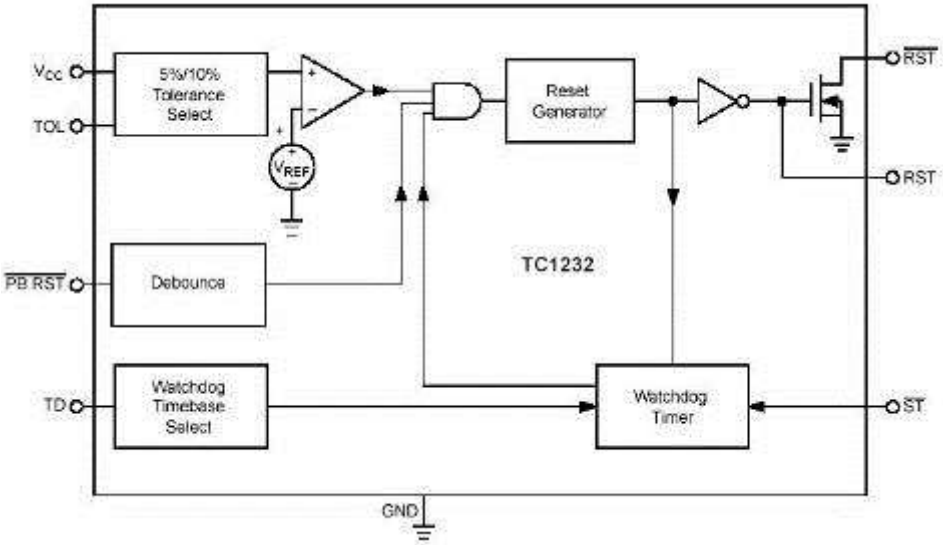

<< BACK

MCP1316/17/18/19/20/21/22

Online Datasheet

Features:

- Low supply current: 1µA (typ.)
- Precision monitoring trip point options:
  2.9V and 4.6V (Standard Offerings)
  2.0V to 4.7V in 100 mV increments
- Resets Microcontroller in a Power-loss Event
- Reset Delay Time Out Option:
  1.4ms, 30ms, 200ms, or 1.6s (typ.)
- Watchdog Timer Input Time Out Options:
  6.3ms, 102ms, 1.6s, or 25.6s (typ.)
- Manual Reset (MR) Input (Active-low)
- Single and Complementary Reset Output(s)
- Reset Output Options:
  Push-Pull (Active-high or Active-low)
  Open-Drain (Internal or External Pull-up)
- Temperature Range:
  -40°C to +85°C for trip points 2.0 to 2.4V
  -40°C to + 125°C for trip points > 2.5V
- Voltage Range: 1.0V to 5.5V
- Space Saving SOT-23-5 Packaging

Device	Reset Output A			Reset Output B			WDI Input	$\overline{MR}$ Input
	Type	Pull-up Resistor	Active Level	Type	Pull-up Resistor	Active Level		
MCP1316	Push-Pull	—	Low	—	—	—	Yes	Yes
MCP1316M	Open-Drain	Internal	Low	—	—	—	Yes	Yes
MCP1317	Push-Pull	—	High	—	—	—	Yes	Yes
MCP1318	Push-Pull	—	Low	Push-Pull	—	High	Yes	No
MCP1318M	Open-Drain	Internal	Low	Push-Pull	—	High	Yes	No
MCP1319	Push-Pull	—	Low	Push-Pull	—	High	No	Yes
MCP1319M	Open-Drain	Internal	Low	Push-Pull	—	High	No	Yes
MCP1320	Open-Drain	External	Low	—	—	—	Yes	Yes
MCP1321	Open-Drain	External	Low	Push-Pull	—	High	Yes	No
MCP1322	Open-Drain	External	Low	Push-Pull	—	High	No	Yes

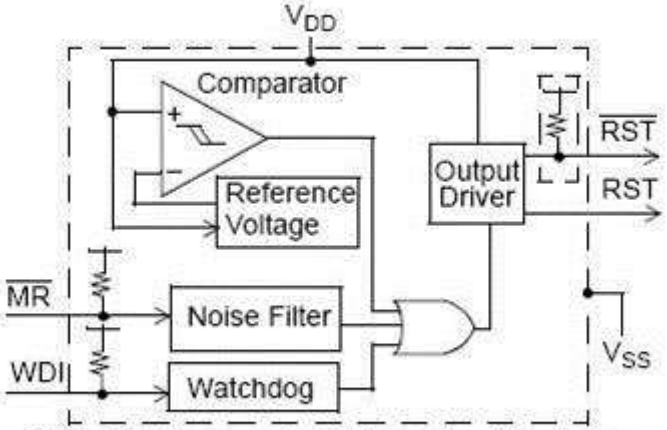

Note: Features available depend on the device

<< BACK

MCP1316/17/18/19/20/21/22

Online Datasheet

Features:

- Low supply current: 1µA (typ.)
- Precision monitoring trip point options:
  2.9V and 4.6V (Standard Offerings)
  2.0V to 4.7V in 100 mV increments
- Resets Microcontroller in a Power-loss Event
- Reset Delay Time Out Option:
  1.4ms, 30ms, 200ms, or 1.6s (typ.)
- Watchdog Timer Input Time Out Options:
  6.3ms, 102ms, 1.6s, or 25.6s (typ.)
- Manual Reset (MR) Input (Active-low)
- Single and Complementary Reset Output(s)
- Reset Output Options:
  Push-Pull (Active-high or Active-low)
  Open-Drain (Internal or External Pull-up)
- Temperature Range:
  -40°C to +85°C for trip points 2.0 to 2.4V
  -40°C to + 125°C for trip points > 2.5V
- Voltage Range: 1.0V to 5.5V
- Space Saving SOT-23-5 Packaging

Device	Reset Output A			Reset Output B			WDI Input	$\overline{MR}$ Input
	Type	Pull-up Resistor	Active Level	Type	Pull-up Resistor	Active Level		
MCP1316	Push-Pull	—	Low	—	—	—	Yes	Yes
MCP1316M	Open-Drain	Internal	Low	—	—	—	Yes	Yes
MCP1317	Push-Pull	—	High	—	—	—	Yes	Yes
MCP1318	Push-Pull	—	Low	Push-Pull	—	High	Yes	No
MCP1318M	Open-Drain	Internal	Low	Push-Pull	—	High	Yes	No
MCP1319	Push-Pull	—	Low	Push-Pull	—	High	No	Yes
MCP1319M	Open-Drain	Internal	Low	Push-Pull	—	High	No	Yes
MCP1320	Open-Drain	External	Low	—	—	—	Yes	Yes
MCP1321	Open-Drain	External	Low	Push-Pull	—	High	Yes	No
MCP1322	Open-Drain	External	Low	Push-Pull	—	High	No	Yes

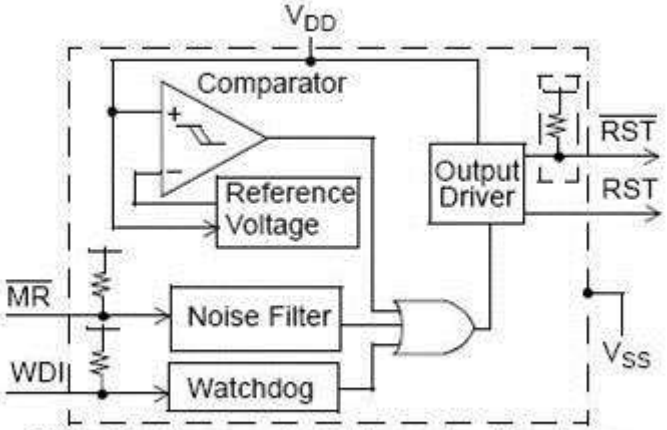

Note: Features available depend on the device

<< BACK

MCP1316/17/18/19/20/21/22

Online Datasheet

Features:

- Low supply current: 1µA (typ.)
- Precision monitoring trip point options:
  2.9V and 4.6V (Standard Offerings)
  2.0V to 4.7V in 100 mV increments
- Resets Microcontroller in a Power-loss Event
- Reset Delay Time Out Option:
  1.4ms, 30ms, 200ms, or 1.6s (typ.)
- Watchdog Timer Input Time Out Options:
  6.3ms, 102ms, 1.6s, or 25.6s (typ.)
- Manual Reset (MR) Input (Active-low)
- Single and Complementary Reset Output(s)
- Reset Output Options:
  Push-Pull (Active-high or Active-low)
  Open-Drain (Internal or External Pull-up)
- Temperature Range:
  -40°C to +85°C for trip points 2.0 to 2.4V
  -40°C to + 125°C for trip points > 2.5V
- Voltage Range: 1.0V to 5.5V
- Space Saving SOT-23-5 Packaging

Device	Reset Output A			Reset Output B			WDI Input	$\overline{MR}$ Input
	Type	Pull-up Resistor	Active Level	Type	Pull-up Resistor	Active Level		
MCP1316	Push-Pull	—	Low	—	—	—	Yes	Yes
MCP1316M	Open-Drain	Internal	Low	—	—	—	Yes	Yes
MCP1317	Push-Pull	—	High	—	—	—	Yes	Yes
MCP1318	Push-Pull	—	Low	Push-Pull	—	High	Yes	No
MCP1318M	Open-Drain	Internal	Low	Push-Pull	—	High	Yes	No
MCP1319	Push-Pull	—	Low	Push-Pull	—	High	No	Yes
MCP1319M	Open-Drain	Internal	Low	Push-Pull	—	High	No	Yes
MCP1320	Open-Drain	External	Low	—	—	—	Yes	Yes
MCP1321	Open-Drain	External	Low	Push-Pull	—	High	Yes	No
MCP1322	Open-Drain	External	Low	Push-Pull	—	High	No	Yes

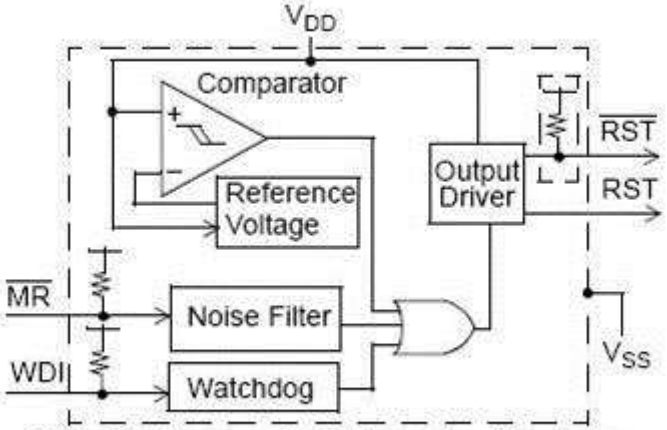

Note: Features available depend on the device

<< BACK

MCP1316/17/18/19/20/21/22

Online Datasheet

Features:

- Low supply current: 1µA (typ.)
- Precision monitoring trip point options:
  2.9V and 4.6V (Standard Offerings)
  2.0V to 4.7V in 100 mV increments
- Resets Microcontroller in a Power-loss Event
- Reset Delay Time Out Option:
  1.4ms, 30ms, 200ms, or 1.6s (typ.)
- Watchdog Timer Input Time Out Options:
  6.3ms, 102ms, 1.6s, or 25.6s (typ.)
- Manual Reset (MR) Input (Active-low)
- Single and Complementary Reset Output(s)
- Reset Output Options:
  Push-Pull (Active-high or Active-low)
  Open-Drain (Internal or External Pull-up)
- Temperature Range:
  -40°C to +85°C for trip points 2.0 to 2.4V
  -40°C to + 125°C for trip points > 2.5V
- Voltage Range: 1.0V to 5.5V
- Space Saving SOT-23-5 Packaging

Device	Reset Output A			Reset Output B			WDI Input	$\overline{MR}$ Input
	Type	Pull-up Resistor	Active Level	Type	Pull-up Resistor	Active Level		
MCP1316	Push-Pull	—	Low	—	—	—	Yes	Yes
MCP1316M	Open-Drain	Internal	Low	—	—	—	Yes	Yes
MCP1317	Push-Pull	—	High	—	—	—	Yes	Yes
MCP1318	Push-Pull	—	Low	Push-Pull	—	High	Yes	No
MCP1318M	Open-Drain	Internal	Low	Push-Pull	—	High	Yes	No
MCP1319	Push-Pull	—	Low	Push-Pull	—	High	No	Yes
MCP1319M	Open-Drain	Internal	Low	Push-Pull	—	High	No	Yes
MCP1320	Open-Drain	External	Low	—	—	—	Yes	Yes
MCP1321	Open-Drain	External	Low	Push-Pull	—	High	Yes	No
MCP1322	Open-Drain	External	Low	Push-Pull	—	High	No	Yes

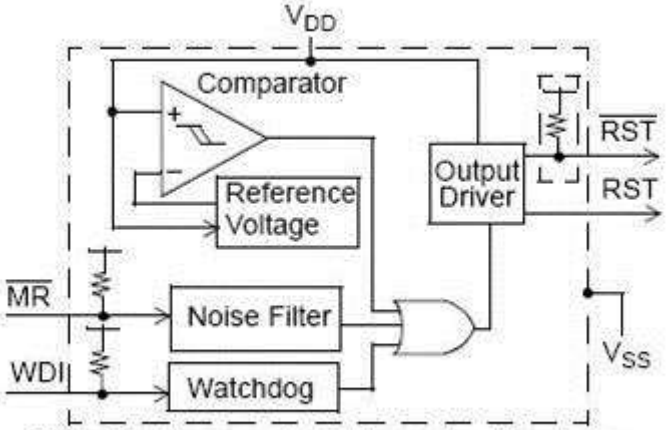

Note: Features available depend on the device

<< BACK

MCP111/112

Online Datasheet

Features:

- Low Supply Current: 1.75µA (max.)
- Precision Monitoring Options:
  1.90V, 2.32V, 2.63V, 2.90V, 2.93V, 3.08V, 4.38V and 4.63V
- Resets Microcontroller in a Power-loss Event
- Active-low V_{OUT} Pin:
  MCP111: Active-low, Open-drain
  MCP112: Active-low, Push-pull
- Temperature Range:
  -40°C to +125°C (except MCP1xx-195)
  -40°C to +85°C
- Space Saving SC-70, SOT23-3 and TO-92 Packages

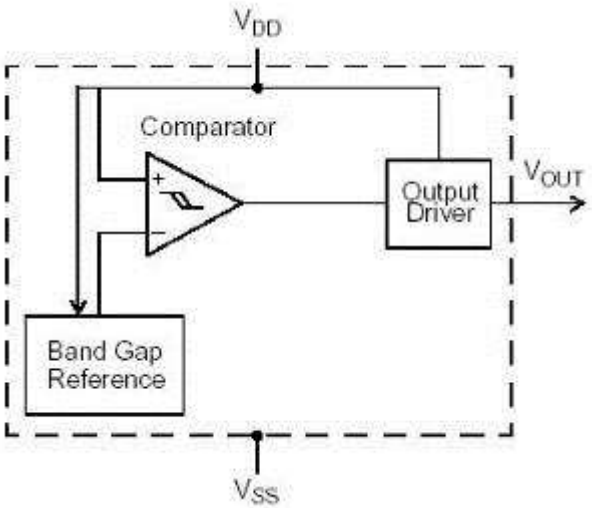

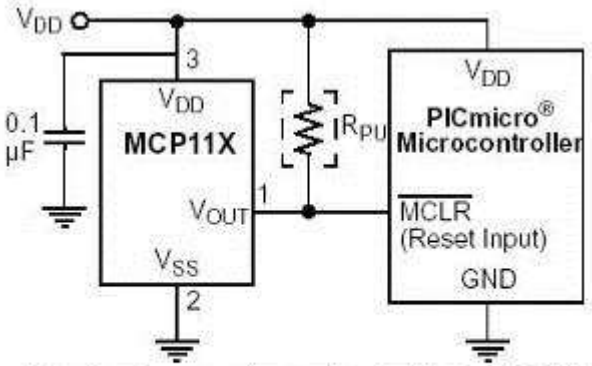

Note 1: R_{PU} may be required with the MCP111 due to the open-drain output. Resistor R_{PU} is not required with the MCP112.

<< BACK

MCP111/112

Online Datasheet

Features:

- Low Supply Current: 1.75µA (max.)
- Precision Monitoring Options:
  1.90V, 2.32V, 2.63V, 2.90V, 2.93V, 3.08V, 4.38V and 4.63V
- Resets Microcontroller in a Power-loss Event
- Active-low V_{OUT} Pin:
  MCP111: Active-low, Open-drain
  MCP112: Active-low, Push-pull
- Temperature Range:
  -40°C to +125°C (except MCP1xx-195)
  -40°C to +85°C
- Space Saving SC-70, SOT23-3 and TO-92 Packages

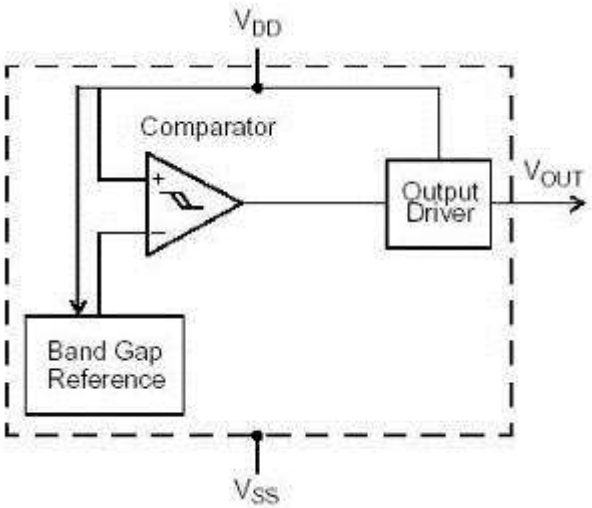

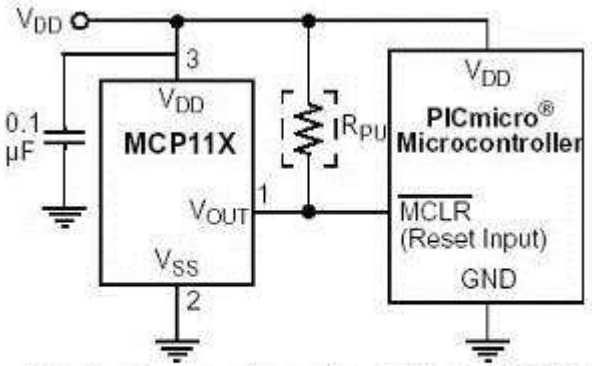

Note 1: R_{PU} may be required with the MCP111 due to the open-drain output. Resistor R_{PU} is not required with the MCP112.

<< BACK

TC54

Online Datasheet

Features:

- Precise Detection Thresholds:
- Standard ±2.0%, Custom ±1.0%
- Small Packages:
  - 3-Pin SOT-23A
  - 3-Pin SOT-89
- Low Current Drain: 1µA (typ.)
- Wide Detection Range:
  - 1.1V to 6.0V
- Wide Operating Voltage Range:
  - 0.7V to 10V
- 3-pin SOT-23A and SOT-89

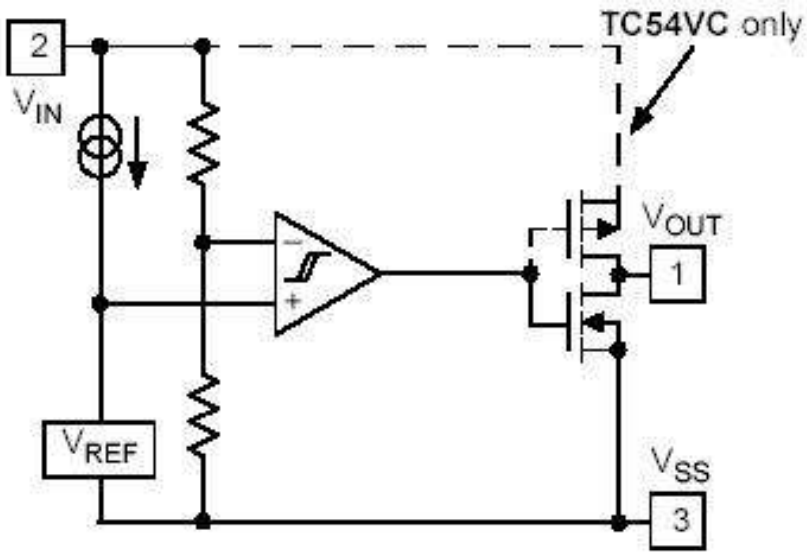

TC54VN has open-drain output.
TC54VC has complementary output.

<< BACK

TC54

Online Datasheet

Features:

- Precise Detection Thresholds:
- Standard ±2.0%, Custom ±1.0%
- Small Packages:
  - 3-Pin SOT-23A
  - 3-Pin SOT-89
- Low Current Drain: 1µA (typ.)
- Wide Detection Range:
  - 1.1V to 6.0V
- Wide Operating Voltage Range:
  - 0.7V to 10V
- 3-pin SOT-23A and SOT-89

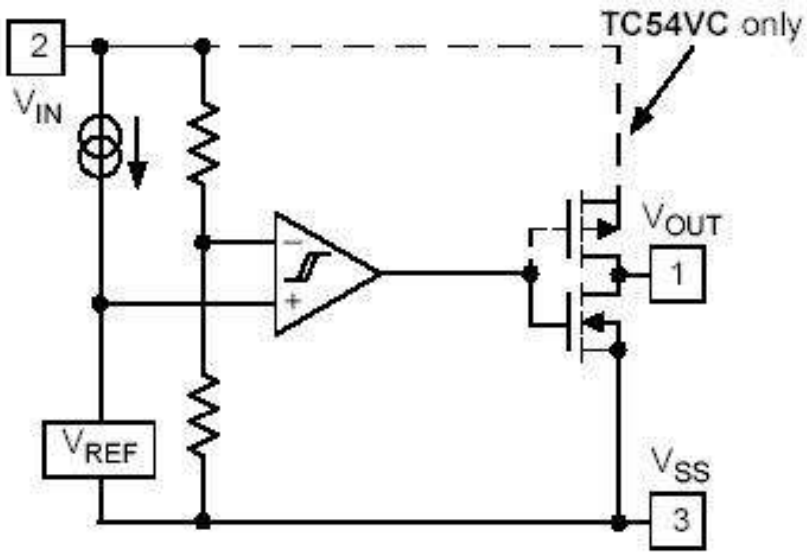

TC54VN has open-drain output.
TC54VC has complementary output.

<< BACK

ATA5021

Digital Window Watchdog Timer

Online Datasheet

Features:

- Low current consumption: IVDD < 25µA
- RC oscillator
- Internal reset during power-up and supply voltage drops (POR)
- “Short” trigger window for active mode
- “Long” trigger window for sleep mode
- Cyclical wake-up of the microcontroller in sleep mode
- Trigger input
- Single wake-up input
- Reset output
- Enable output
- Qualified according to AEC-Q100

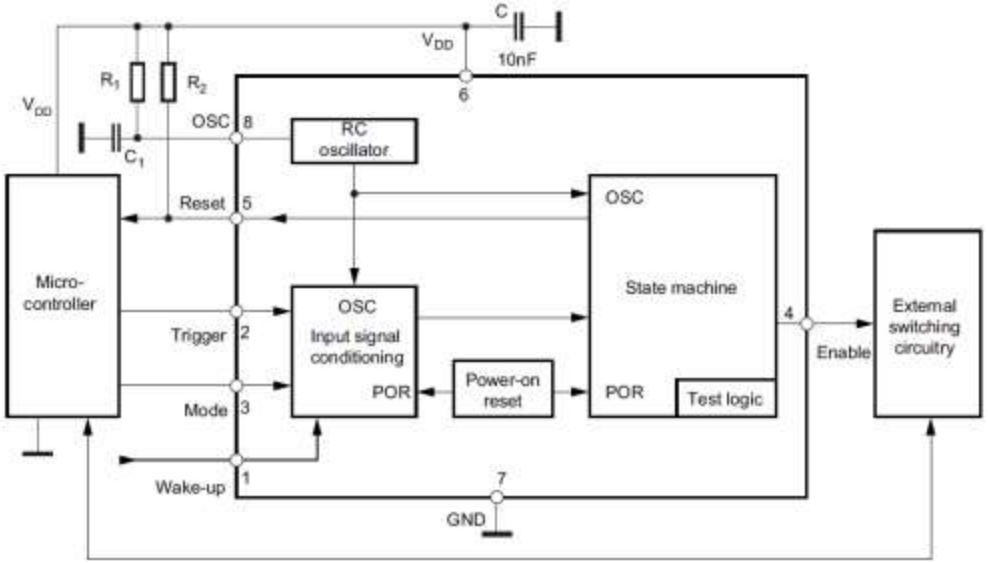

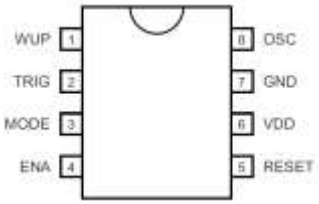

SO8 package

<< BACK

TC1410/N

Online Datasheet

Features:

- Latch-Up Protected: Will Withstand 500mA Reverse Current
- Input Will Withstand Negative Inputs Up to 5V
- ESD Protected: 4kV
- High Peak Output Current: 0.5A
- Wide Input Supply Voltage Operating Range: 4.5V to 16V
- High Capacitive Load Drive Capability: 500pF in 25ns (typ.)
- Short Delay Time: 30ns (typ.)
- Consistent Delay Times With Changes in Supply Voltage
- Matched Delay Times
- Low Supply Current
  With Logic ‘1’ Input: 500µA
  With Logic ‘0’ Input: 100µA
- Low Output Impedance: 16Ω
- Space Saving 8-pin MSOP Package
- Pinout Same as TC1411/TC1412/TC1413

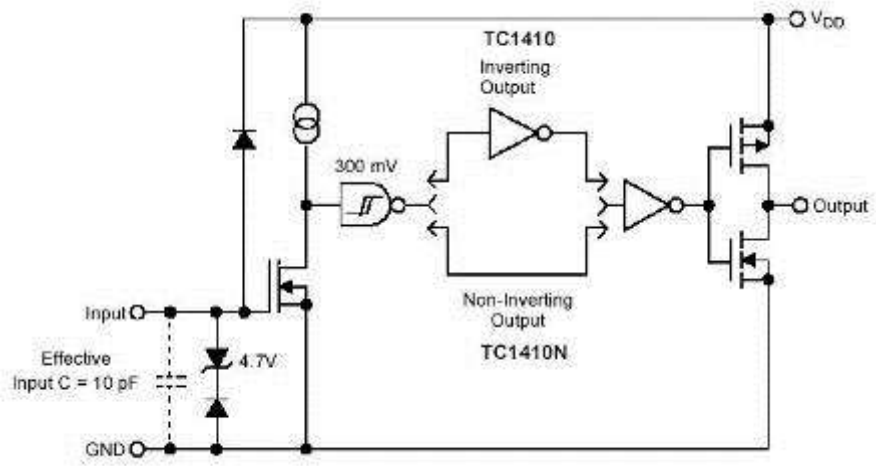

<< BACK

MCP1401/02

Online Datasheet

Features:

- High Peak Output Current: 500mA (typ.)
- Wide Input Supply Voltage Operating Range: 4.5V to 18V
- Low Shoot-Through/Cross-Conduction Current in Output Stage
- High Capacitive Load Drive Capability:
  - 470pF in 19ns (typ.)
  - 1000pF in 34ns (typ.)
- Short Delay Times: 35ns (typ.)
- Matched Rise/Fall Times
- Low Supply Current:
  With Logic ‘1’ Input – 0.85mA (typ.)
  With Logic ‘0’ Input – 0.10mA (typ.)
- Latch-Up Protected: Will Withstand 500mA Reverse Current
- Logic Input Will Withstand Negative Swing Up To 5V
- Space Saving 5-Pin SOT-23 Package

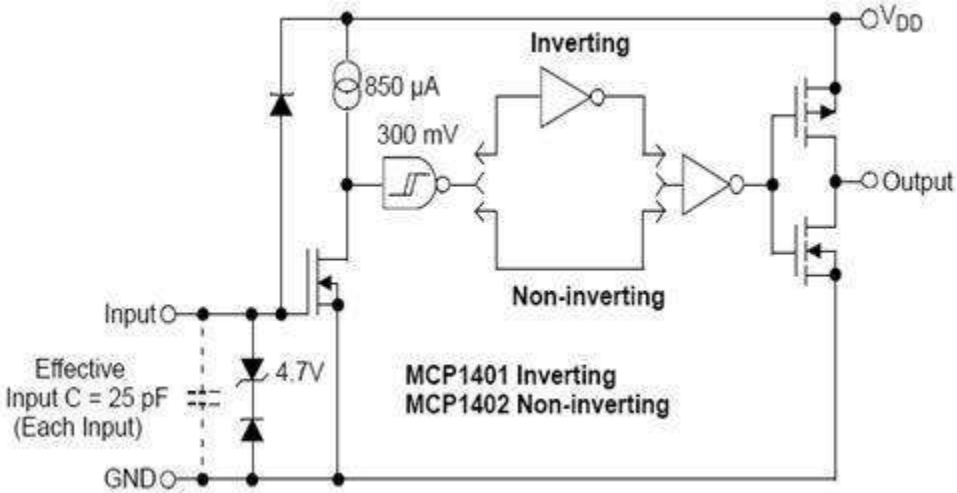

<< BACK

TC1411/N

Online Datasheet

Features:

- Latch-Up Protected: Will Withstand 500mA Reverse Current
- Input Will Withstand Negative Inputs Up to 5V
- ESD Protected: 4kV
- High Peak Output Current: 1A
- Wide Input Supply Voltage Operating Range: 4.5V to 16V
- High Capacitive Load Drive Capability: 1000pF in 25ns (typ.)
- Short Delay Time: 30ns (typ.)
- Matched Delay Times
- Low Supply Current
  With Logic ‘1’ Input: 500µA
  With Logic ‘0’ Input: 100µA
- Low Output Impedance: 8Ω
- Available in Space-Saving 8-pin MSOP Package
- Pinout Same as TC1410/TC1412/TC1413

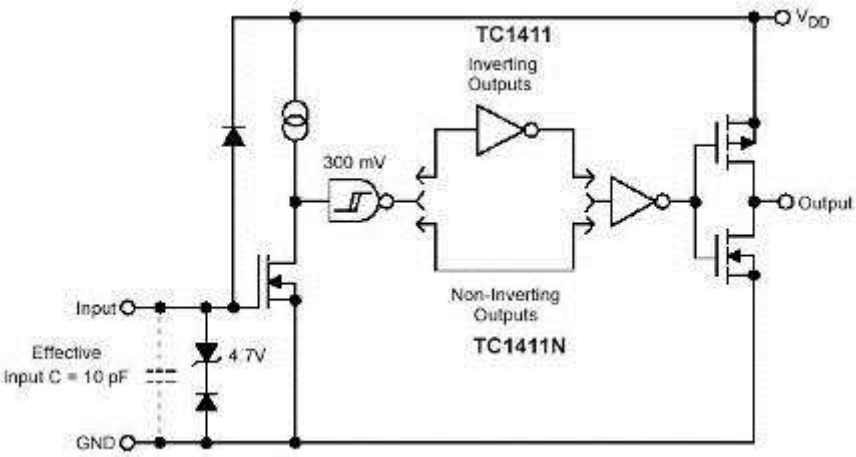

<< BACK

TC4467/8/9

Online Datasheet

Features:

- High Peak Output Current: 1.2A
- Wide Operating Range: 4.5V to 18V
- Symmetrical Rise/Fall Times: 25ns
- Short, Equal Delay Times: 75ns
- Latch-proof. Will Withstand 500mA Inductive Kickback
- 3 Input Logic Choices: AND / NAND / AND + Inv
- ESD Protection on all pins: 2kV

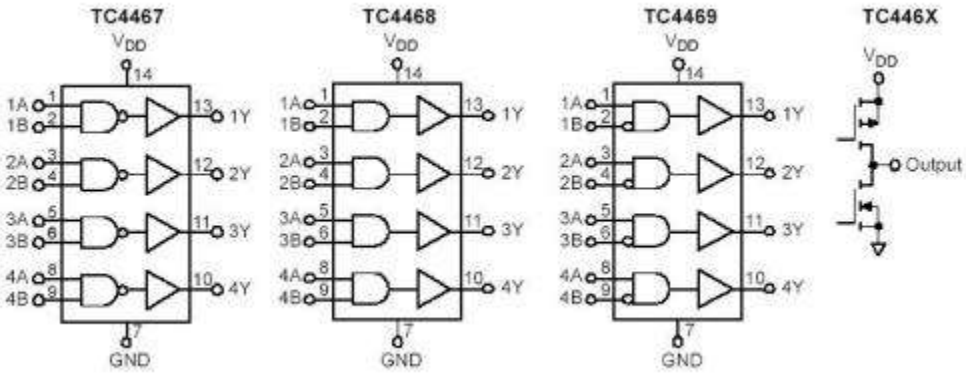

<< BACK

TC4403

Online Datasheet

Features:

- Low Quiescent Current: 300µA (max.)
- Capacitive Inputs With 300mV Hysteresis
- Both Inputs Must Be Driven to Drive Load
- Low Output Leakage
- High Peak Current Capability
- Fast Output Rise Time
- Outputs Individually Testable

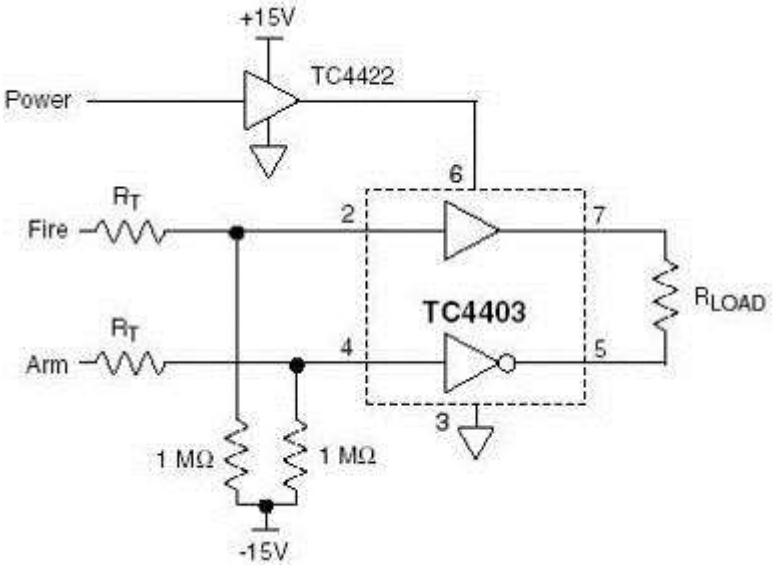

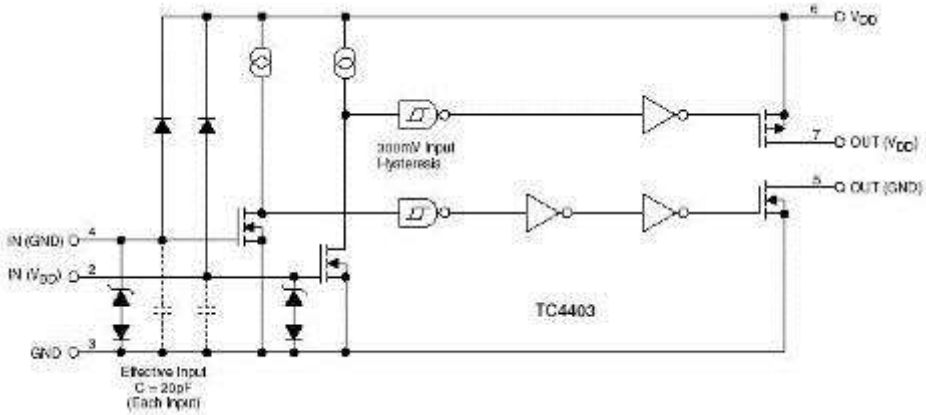

<< BACK

TC4626/7

Online Datasheet

Features:

- Power Driver With On Board Voltage Booster
- Low I_{DD}: <4mA
- Small Package: 8-Pin PDIP
- Under-Voltage Circuitry
- Fast Rise-Fall Time: <40ns @1000pF
- Below-Rail Input Protection

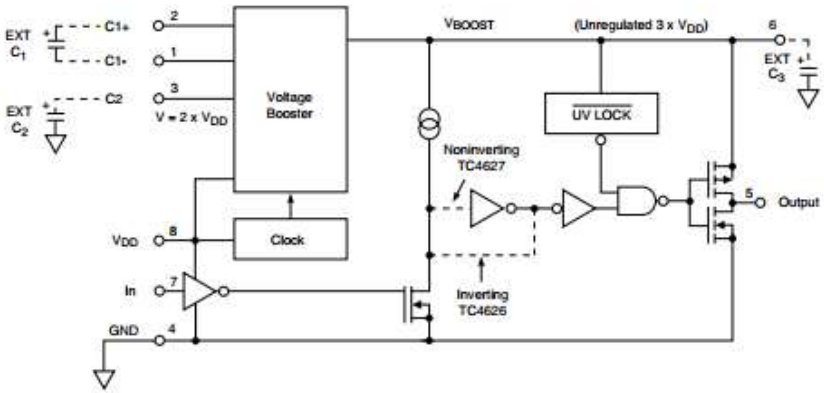

<< BACK

TC4431/2

Online Datasheet

Features:

- High Peak Output Current: 1.5A
- Wide Operating Range: 4.5V to 30V
- High Capacitive Load Drive Capability: 1000pF in 25ns
- Short Delay Times: < 78ns (typ.)
- Low Supply Current:
  - With Logic ‘1’ Input: 2.5mA
  - With Logic ‘0’ Input: 300µA
- Low Output Impedance: 7Ω (typ.)
- Latch-Up Protected: Will Withstand > 300mA Reverse Current
- ESD Protected: 4kV

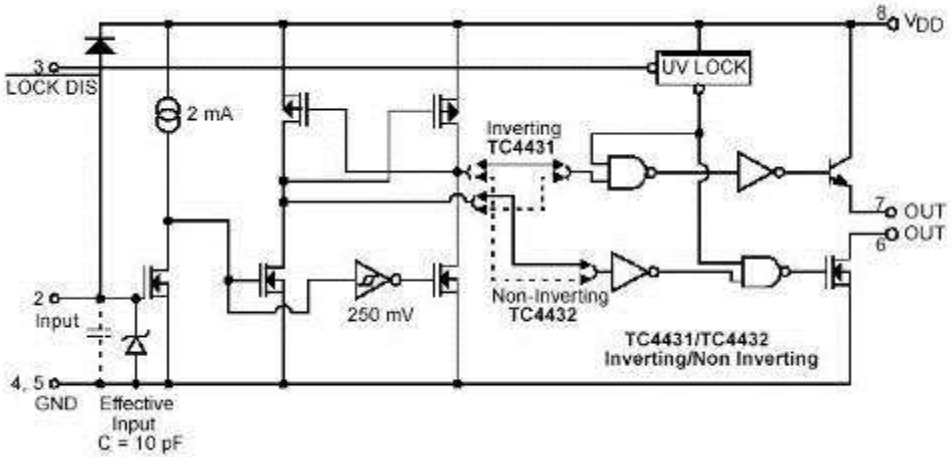

<< BACK

TC4426A/27A/28A

Online Datasheet

Features:

- High Peak Output Current: 1.5A
- Wide Input Supply Voltage Operating Range: 4.5V to 18V
- High Capacitive Load Drive Capability: 1000pF in 25ns (typ.)
- Short Delay Times: 30ns (typ.)
- Matched Rise, Fall and Delay Times
- Low Supply Current:
  With Logic ‘1’ Input: 1mA (typ.)
  With Logic ‘0’ Input: 100µA (typ.)
- Low Output Impedance: 7Ω (typ.)
- Latch-Up Protected: Will Withstand 0.5A Reverse Current
- Input Will Withstand Negative Inputs Up to 5V
- ESD Protected: 4kV
- Pin-compatible with TC426/27/28 and TC4426/27/28
- 8-Pin MSOP and 8-Pin 6x5 DFN Packages

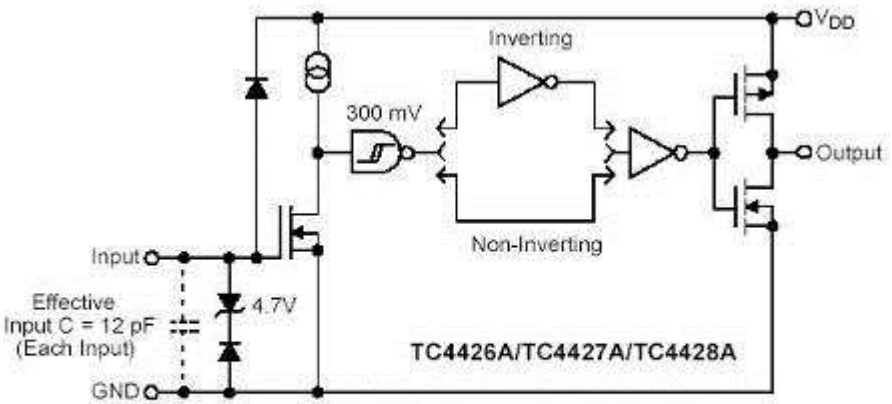

Note 1: TC4426A has two inverting drivers; TC4427A has two non-inverting drivers; TC4428A has one inverting and one non-inverting driver.

2: Ground any unused driver input.

<< BACK

TC4404/5

Online Datasheet

Features:

- Independently-Programmable Rise and Fall Times
- Low Output Impedance: 7Ω (typ.)
- High Speed t_R, t_F: < 30ns with 1000pF Load
- Short Delay Times: < 30ns
- Wide Operating Range: 4.5V to 18V
- Latch-Up Protected: Will Withstand > 500mA Reverse Current (Either Polarity)
- Input Withstands Negative Swings Up to -5V

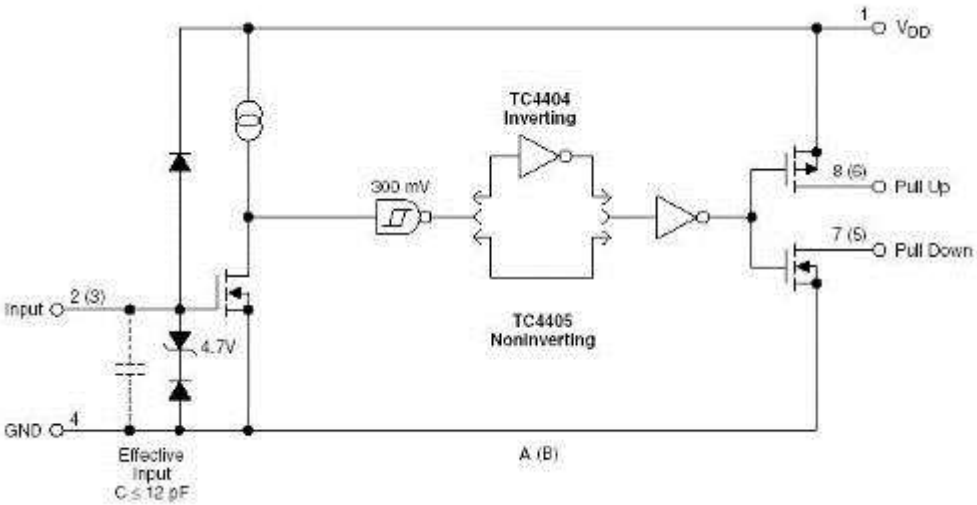

<< BACK

TC1412/N

Online Datasheet

Features:

- High Peak Output Current: 2A
- Latch-Up Protected: Will Withstand 500mA Reverse Current
- Input Will Withstand Negative Inputs Up to 5V
- ESD Protected: 4kV
- Wide Operating Range: 4.5V to 16V
- High Capacitive Load Drive Capability: 1000pF in 18ns
- Short Delay Time: 35ns (typ.)
- Matched Delay Times
- Low Supply Current
  - With Logic ‘1’ Input: 500µA (typ.)
  - With Logic ‘0’ Input: 100µA (typ.)
- Low Output Impedance: 4Ω (typ.)
- Pinout Same as TC1410/11/13
- Space Saving 8-Pin MSOP Package

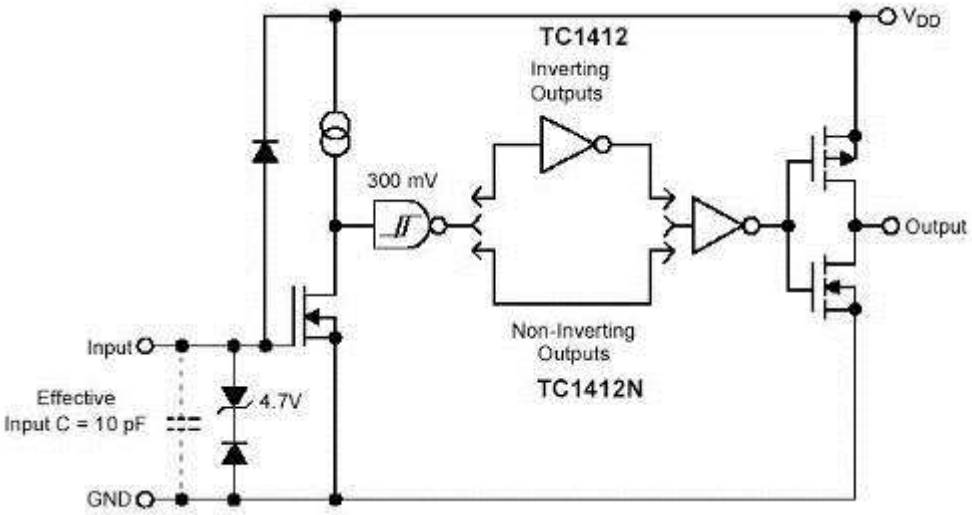

<< BACK

MCP14628

Online Datasheet

Features:

- Dual Output MOSFET Driver for Synchronous Applications
- High Peak Output Current: 2A (typ.)
- Adaptive Cross Conduction Protection
- Internal Bootstrap Blocking Device
- +36V BOOT Pin Maximum Rating
- Enhanced Light Load Efficiency Mode
- Low Supply Current: 80µA (typ.)
- High Capacitive Load Drive Capability: 3300pF in 10ns (typ.)
- Tri-State PWM Pin for Power Stage Shutdown
- Input Voltage Undervoltage Lockout Protection
- Space Saving Packages: 8-Lead SOIC, 8-Lead 3x3 DFN

Functional Block Diagram

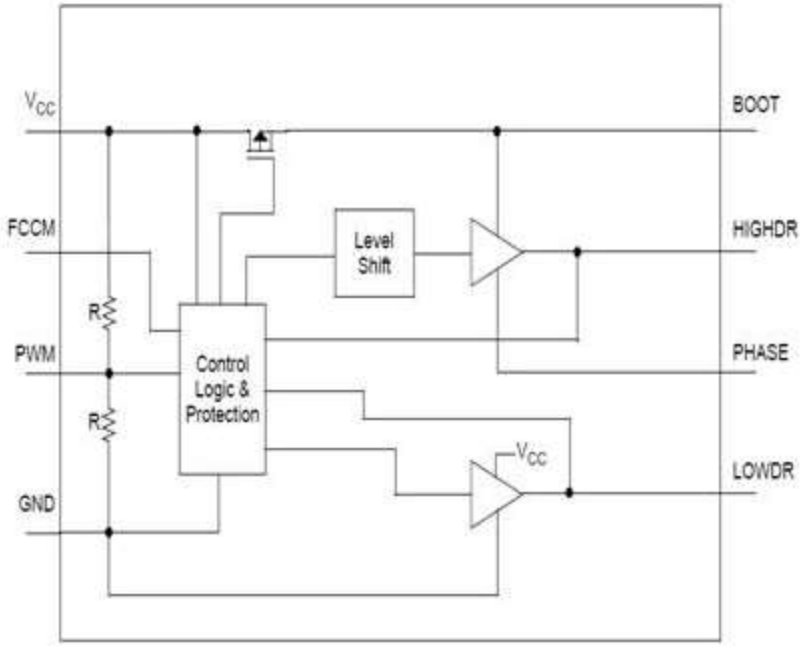

<< BACK

MCP14A0051/2

Online Datasheet

Features:

- Peak Output Current: 0.5 A (typical)
- Wide Supply Voltage Range: 4.5 V to 18 V
- Low Shoot-Through/Cross-Conduction Current in Output Stage
- High Capacitive Load Drive Capability:
  - 1000 pF in 40 ns (typ.)
  - Short Delay: 33 ns (t_{D1}), 24 ns (t_{D2}) (typ.)
- Low Supply Current: 375 µA (typ.)
- Low Voltage Threshold Input and Enable
  - Hysteresis: 1.2 to 1.6 V
- Latch-Up Protected:
  - Withstands 500 mA Reverse Current
- Small Packages: 6-lead SOT-23 and 2x2 DFN

Functional Block Diagram

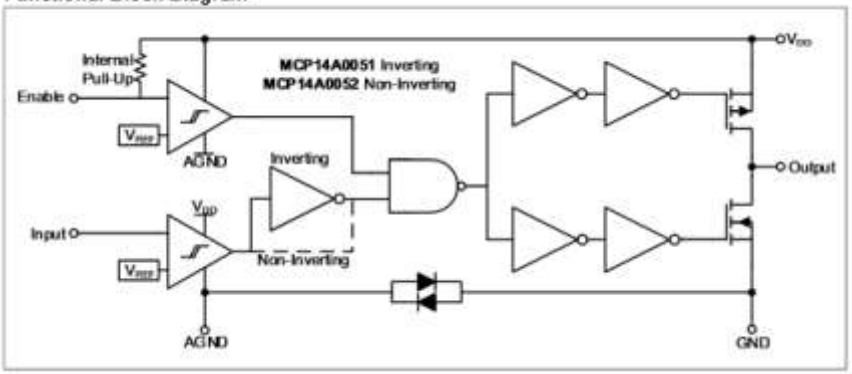

<< BACK

MCP14A0153/4/5

Online Datasheet

Features

- High Peak Output Current: 1.5A (typical)
- Wide Input Supply Voltage Operating Range: 4.5V to 18V
- Low Shoot-Through/Cross-Conduction Current in Output Stage
- High Capacitive Load Drive Capability: 1000 pF in 11.5 ns (typical)
- Short Delay Times: 25 ns (tD1), 24 ns (tD2) (typical)
- Low Supply Current: 750 µA (typical)
- Low-Voltage Threshold Input and Enable with Hysteresis
- Latch-Up Protected: Withstands 500 mA Reverse Current
- Space-Saving Packages:
  - 8-Lead MSOP
  - 8-Lead SOIC
  - 8-Lead 2x3 TDFN

Functional Block Diagram

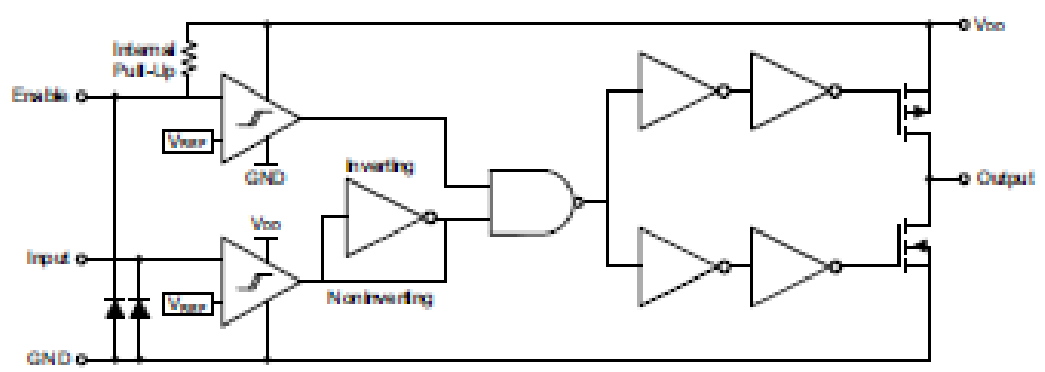

MCP14A0153 Dual Inverting
MCP14A0154 Dual Noninverting
MCP14A0155 One Inverting, One Noninverting

<< BACK

MCP14A0151/2

Online Datasheet

Features:

- Peak Output Current: 1.5 A (typical)
- Wide Supply Voltage Range: 4.5 V to 18 V
- Low Shoot-Through/Cross-Conduction Current in Output Stage
- High Capacitive Load Drive Capability:
  - 1000 pF in 11.5 ns (typ.)
  - Short Delay: 33 ns (t_{D1}), 24 ns (t_{D2}) (typ.)
- Low Supply Current: 375 µA (typ.)
- Low Voltage Threshold Input and Enable
  - Hysteresis: 1.2 to 1.6 V
- Latch-Up Protected:
  - Withstands 500 mA Reverse Current
- Small Packages: 6-lead SOT-23 and 2x2 DFN

Functional Block Diagram

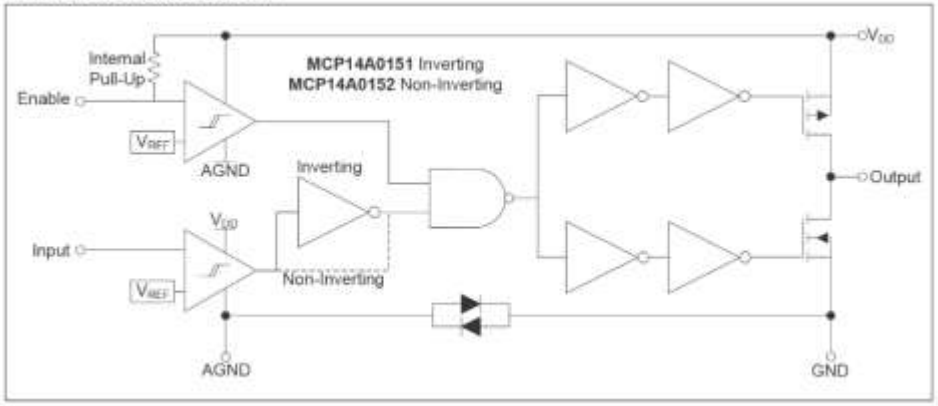

<< BACK

MCP14700

Online Datasheet

Features:

- Independent PWM Input Control for High-Side and Low-Side Gate Drive
- Input Logic Level Threshold 3.0V TTL Compatible
- Dual Output MOSFET Drive for Synchronous Applications
- High Peak Output Current: 2A (typ.)
- Internal Bootstrap Blocking Device
- +36V BOOT Pin Maximum Rating
- Low Supply Current: 45µA (typ.)
- High Capacitive Load Drive Capability:
  - 3300pF in 10.0ns (typ.)
- Input Voltage Undervoltage Lockout Protection
- Overtemperature Protection
- Packages: 8-Lead SOIC, 8-Lead 3x3 DFN

Functional Block Diagram

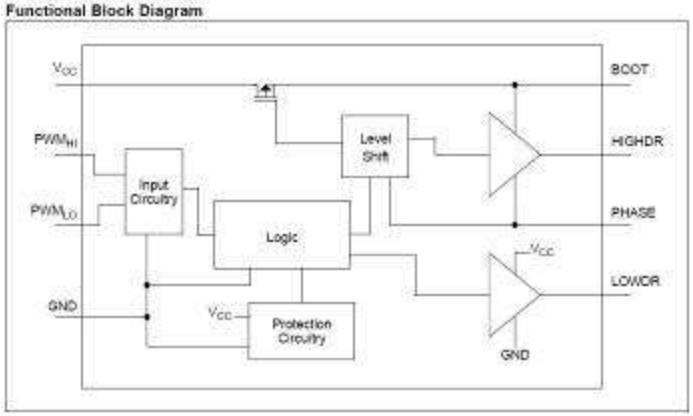

3-Phase BLDC Motor Control Application

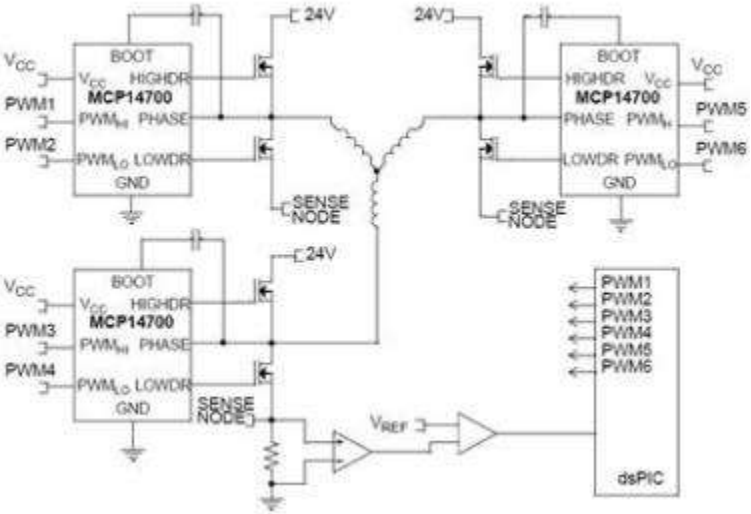

Synchronous Buck Application

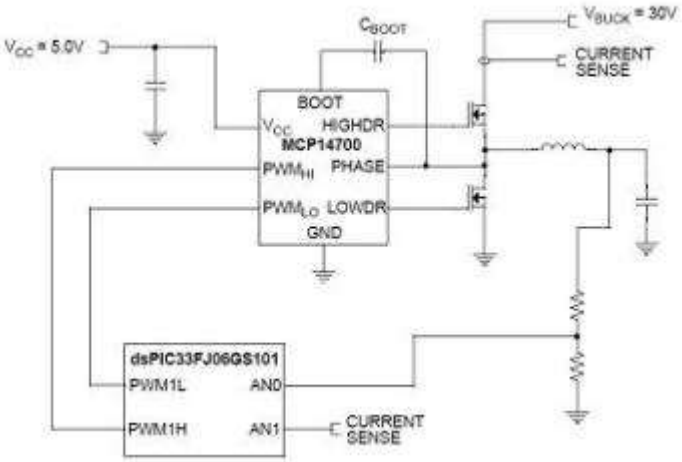

<< BACK

MCP1415/6

Online Datasheet

Features:

- High Peak Output Current: 1.5A (typ.)
- Wide Input Supply Voltage Operating Range: 4.5V to 18V
- Low Shoot-Through/Cross-Conduction - Current in Output Stage
- High Capacitive Load Drive Capability:
  470pF in 13ns (typ.)
  1000pF in 20ns (typ.)
- Short Delay Times: 41ns (t_{D1}), 48ns (t_{D2}), (typ.)
- Low Supply Current:
  With Logic '1' Input: 0.65mA (typ.)
  With Logic '0' Input: 0.1mA (typ.)
- Latch-Up Protected: Will Withstand 500mA Reverse Current
- Logic Input Withstands Negative Swing up to 5V
- Space-saving 5-SOT-23 Package

Functional Block Diagram

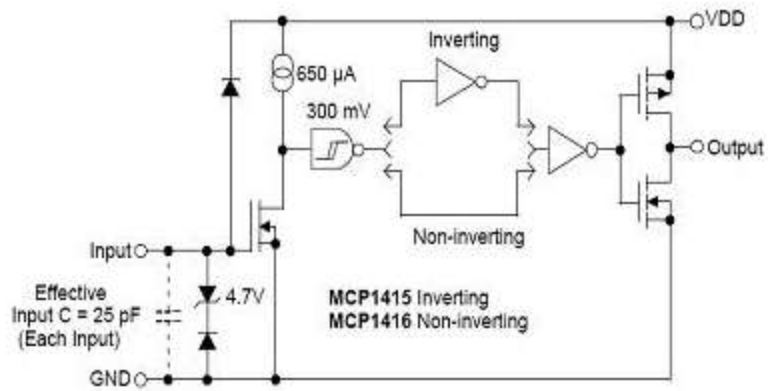

Note: Unused inputs should be grounded.

SOT-23-5

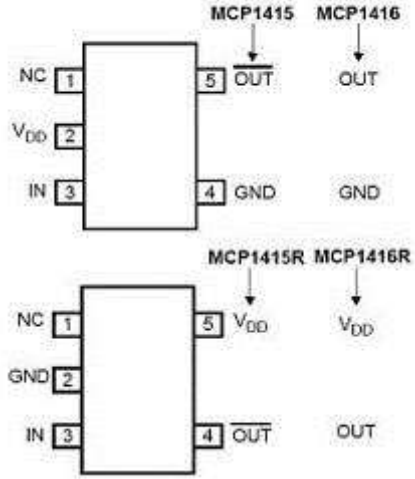

<< BACK

TC1413/N

Online Datasheet

Features:

- High Peak Output Current: 3A
- Latch-Up Protected: Will Withstand 500mA Reverse Current
- Input Will Withstand Negative Inputs Up to 5V
- ESD Protected: 4kV
- Wide Operating Range: 4.5V to 16V
- High Capacitive Load Drive Capability: 1800pF in 20ns
- Short Delay Time: 35ns (typ.)
- Matched Delay Times
- Low Supply Current
  - With Logic ‘1’ Input: 500µA
  - With Logic ‘0’ Input: 100µA
- Low Output Impedance: 2.7Ω
- Pinout Same as TC1410/11/12
- Space Saving 8-Pin MSOP Package

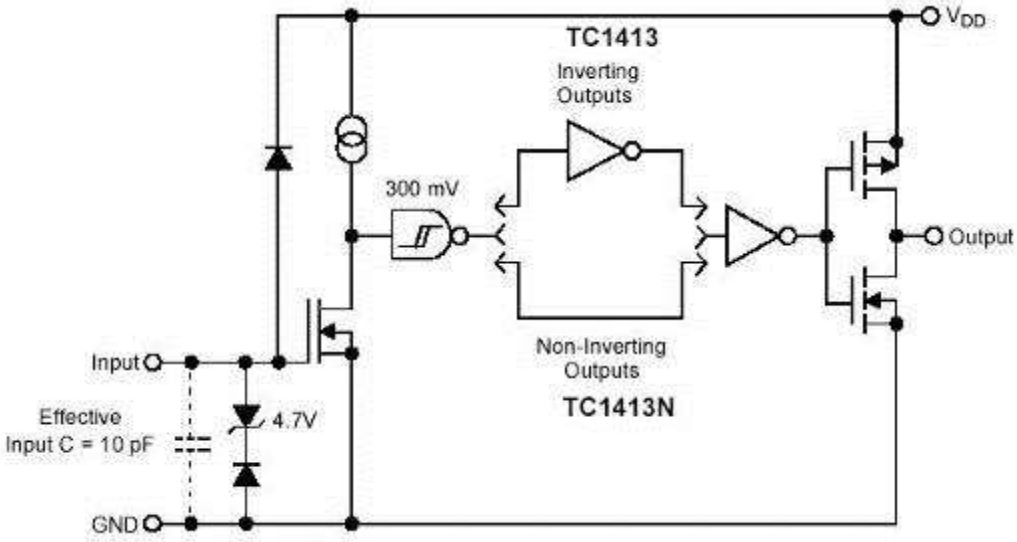

<< BACK

TC4423A/24A/25A

Online Datasheet

Features:

- High Peak Output Current: 4.5A
- Wide Input Supply Voltage Operating Range: 4.5V to 18V
- High Capacitive Load Drive Capability: 1800pF in 12ns
- Short Delay Times: 40ns (typ.)
- Matched Rise/Fall Times
- Low Supply Current:
  With Logic ‘1’ Input: 1.0mA (max.)
  With Logic ‘0’ Input: 150µA (max.)
- Low Output Impedance: 2.5Ω (typ.)
- Latch-up protected: will withstand 1.5A reverse current
- Logic input will withstand negative swing up to 5V
- Pin compatible with the TC4423/24/25 and TC4426A/27A/28A
- Space-saving 8-Pin 150 mil body SOIC and 8-Pin 6x5 DFN packages

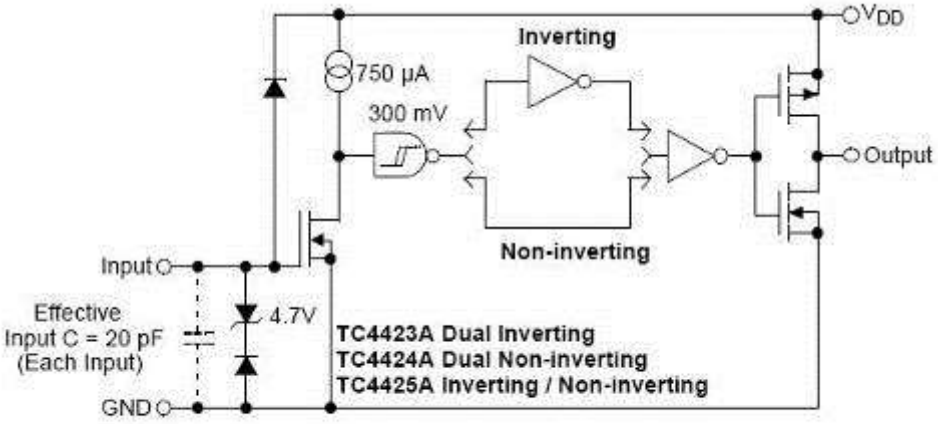

Note 1: Unused inputs should be grounded.

<< BACK

MCP1403/4/5

Online Datasheet

Features:

- High Peak Output Current: 4.5A
- Wide Input Supply Voltage Operating Range: 4.5V to 18V
- High Capacitive Load Drive Capability: 2200pF in 15ns
- Short Delay Times: 40ns (typ.)
- Low Supply Current:
  With Logic ‘1’ Input: 1.0mA (max.)
  With Logic ‘0’ Input: 150µA (max.)
- Latch-Up Protected: Will Withstand 1.5A Reverse Current
- Logic Input Will Withstand Negative Swing up to 5V
- Packages: 8-Pin SOIC, PDIP, 6x5 DFN, and 16-Pin SOIC

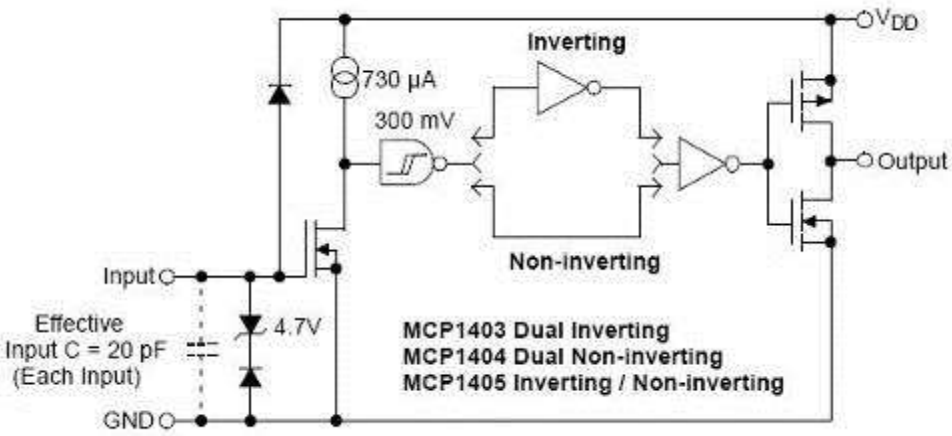

<< BACK

MCP14E3/4/5

Online Datasheet

Features:

- High Peak Output Current: 4.0A
- Independent Enable Function for Each Driver Output
- Low Shoot-Through/Cross-Conduction Current in Output Stage
- Wide Input Supply Voltage Operating Range: 4.5V to 18V
- High Capacitive Load Drive Capability:
  2200pF in 15ns (typ.)
  5600pF in 26ns (typ.)
- Short Delay Times: 50ns (typ.)
- Latch-Up Protected: Will Withstand 1.5A Reverse Current
- Logic Input Will Withstand Negative Swing Up To 5V
- Space-Saving Packages:
  8-Pin 6x5 DFN, PDIP, SOIC

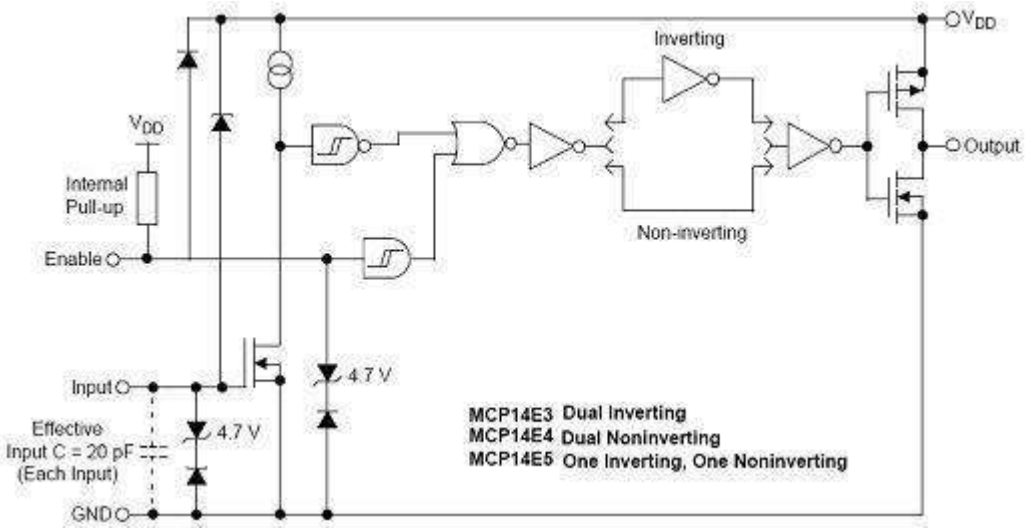

<< BACK

MCP14E6/7/8

Online Datasheet

Features:

- High peak output Current: 2A (typ.)
- Dual Outputs
  - Dual inverting: MCP14E6
  - Dual non-inverting: MCP14E7
  - Complementary outputs: MCP14E8
- Enable Function for each Driver
- Low Shoot-Through/Cross-Conduction Current in output Stage
- Wide Input Operating Range: 4.5v to 18V
- High Capacitive Load drive Capability:
  - 1000 pF in 15 nsec (typ.)
- Short Delay Times: 45 nsec (typ.)
- Latch-up Protected
  - Passed JEDEC JESD78A
- Input are TTL/CMOS compatible and will withstand negative swings up to 5V
- ESD Protected: 4kV
- Packages:
  8-Pin 6x5 DFN, PDIP, SOIC

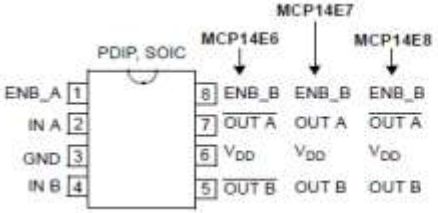

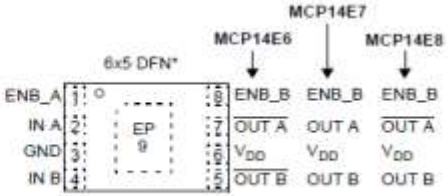

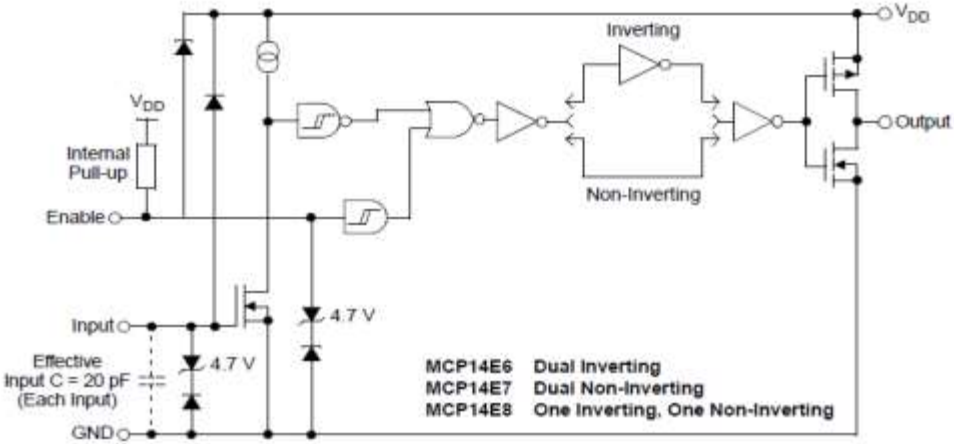

<< BACK

MCP14E9/10/11

Online Datasheet

Features:

- High peak output Current: 3A (typ.)
- Dual Outputs (E9/10/11):
  - Dual inverting: MCP14E9
  - Dual non-inverting: MCP14E10
  - Complementary outputs: MCP14E11
- Enable Function for each Driver
- Low Shoot-Through/Cross-Conduction Current Wide Input Operating Range: 4.5v to 18V
- High Capacitive Load drive Capability:
  - 1800 pF in 17 nsec (typ.)
- Short Delay Times: 45 nsec (typ.)
- Latch-up Protected
  - Passed JEDEC JESD78A
- Input are TTL/CMOS compatible and will withstand negative swings Up To 5V
- ESD Protected: 4kV
- Packages:
  8-Pin 6x5 DFN, PDIP, SOIC

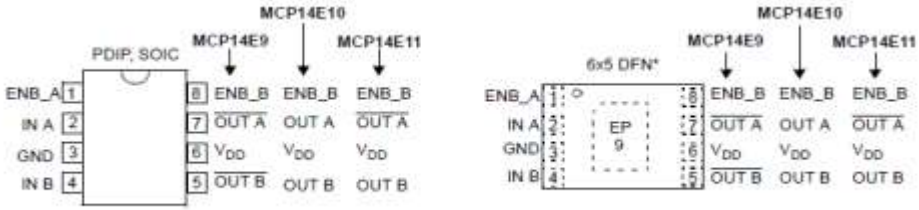

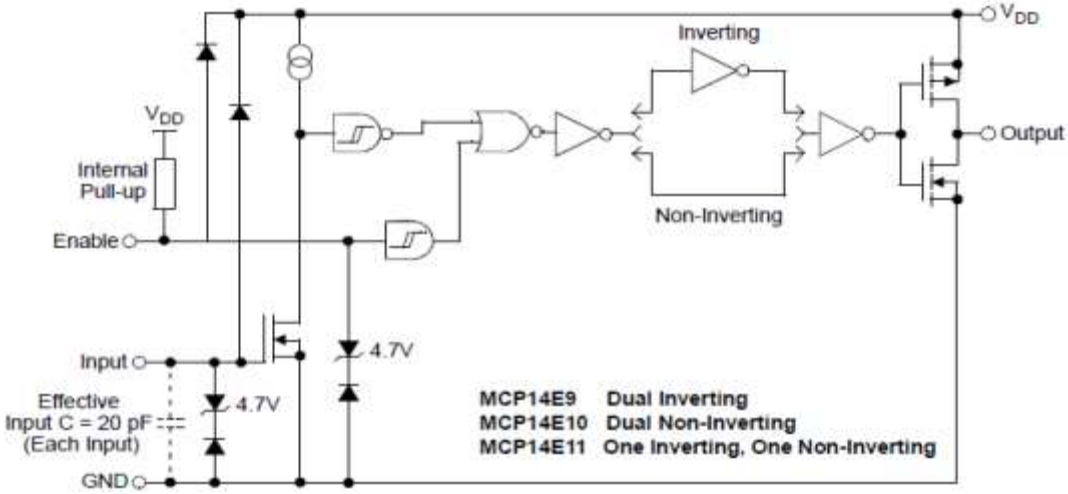

<< BACK

MCP1406/7

Online Datasheet

Features:

- High Peak Output Current: 6.0A (typ.)
- Wide Input Supply Voltage Operating Range: 4.5V to 18V
- High Capacitive Load Drive Capability:
  2500pF in 20ns
  6800pF in 40ns
- Short Delay Times: 40ns (typ.)
- Matched Rise/Fall Times
- Low Supply Current:
  With Logic ‘1’ Input: 130µA (typ.)
  With Logic ‘0’ Input: 35µA (typ.)
- Latch-Up Protected: Will Withstand 1.5A Reverse Current
- Logic Input Will Withstand Negative Swing up to 5V
- Pin compatible with the TC4420/TC4429
- Space-saving 8-Pin SOIC, PDIP and 8-Pin 6x5 DFN Packages

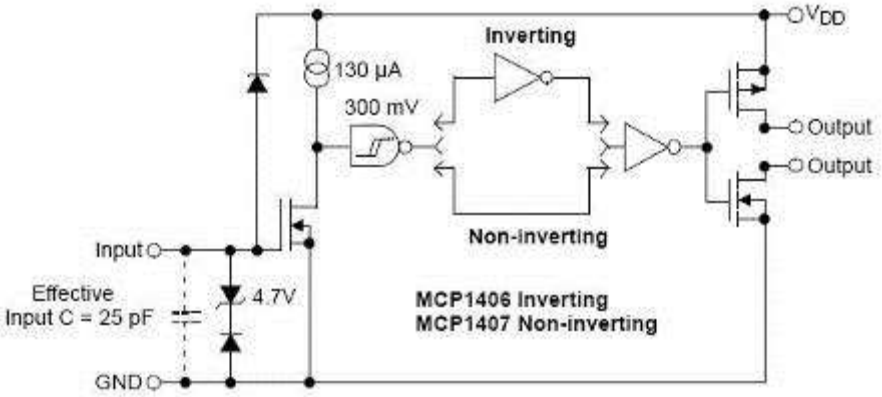

<< BACK

TC4421A/4422A

Online Datasheet

Features:

- High Peak Output Current: 9A
- Wide Input Supply Voltage Operating Range: 4.5V to 18V
- High Continuous Output Current: 2A (max.)
- Fast Rise and Fall Times:
  30ns with 4,700pF Load
  180ns with 47,000pF Load
- Short Propagation Delays: 30ns (typ.)
- Low Supply Current:
  With Logic ‘1’ Input: 200µA (typ.)
  With Logic ‘0’ Input: 55µA (typ.)
- Low Output Impedance: 1.4Ω (typ.)
- Latch-Up Protected: Will Withstand 1.5A Output Reverse Current
- Input Will Withstand Negative Inputs up to 5V
- Pin-Compatible with the TC4420/TC4429
- Space-saving 8-Pin 6x5 DFN Package

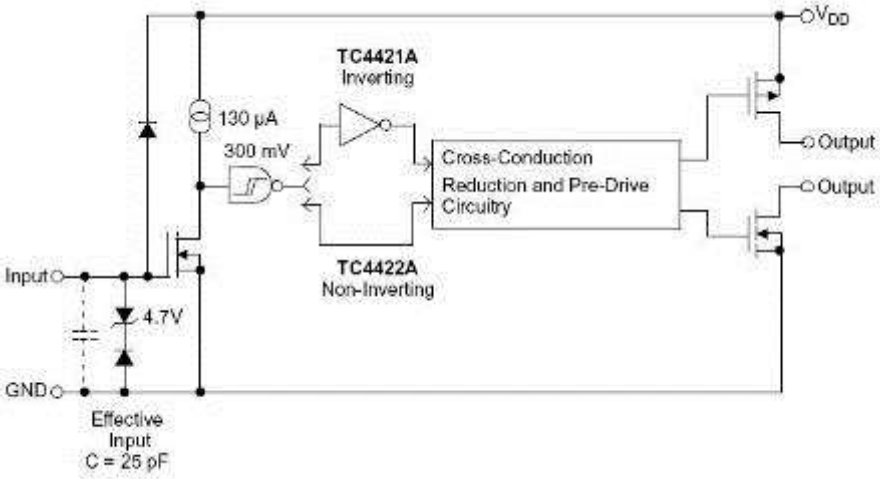

<< BACK

TC4451/4452

Online Datasheet

Features:

- High Peak Output Current: 13A (typ.)
- Wide Input Supply Voltage Operating Range: 4.5V to 18V
- High Continuous Output Current: 2.6A (max.)
- Matched Fast Rise and Fall Times:
  21ns with 10,000 pF Load
  42ns with 22,000 pF Load
- Matched Propagation Delays: 44ns (typ.)
- Low Supply Current:
  With Logic ‘1’ Input: 140µA (typ.)
  With Logic ‘0’ Input: 40µA (typ.)
- Low Output Impedance: 0.9Ω (typ.)
- Latch-Up Protected: Will Withstand 1.5A Output Reverse Current
- Input Will Withstand Negative Inputs up to 5V
- Pin-Compatible with the TC4420/TC4429, TC4421/TC4422 and TC4421A/TC4422A
- Space-Saving, Thermally-Enhanced, 8-Pin DFN Package

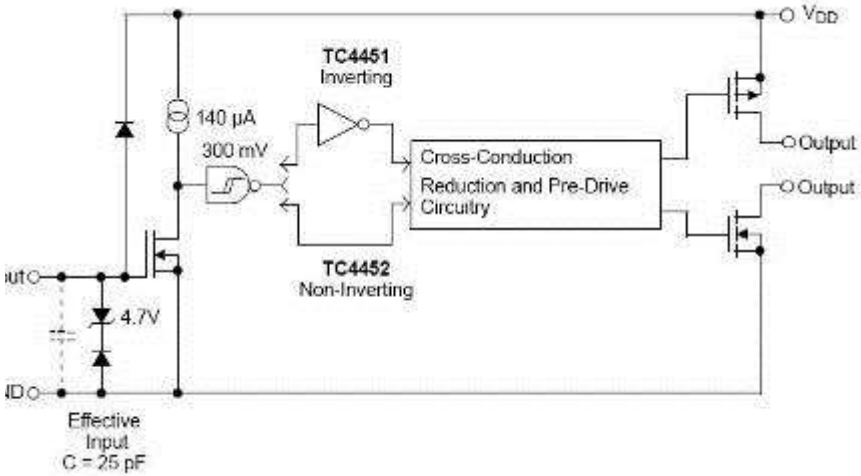

<< BACK

MCP87xxx Power MOSFET Product Family

Online Datasheet

- **Features**
  - Low Drain-to-Source On Resistance (RDS(ON))
  - Low Total Gate Charge (QG) and Gate-to-Drain Charge (QGD)
  - Low Series Gate Resistance (RG)
  - Fast Switching = Capable of Short Dead-Time Operation for Maximum Power Conversion Efficiency
  - ROHS Compliant
- **Use with Microchip's Switching Controllers and/or MOSFET Drivers**

<< BACK

MCP73826

Online Datasheet

Features:

- Linear Charge Management Controller for Single Lithium-Ion Cells
- High Accuracy Preset Voltage Regulation: ±1% (max.)
- Two Preset Voltage Regulation Options:
  4.1V, MCP73826-4.1
  4.2V, MCP73826-4.2
- Programmable Charge Current
- Automatic Cell Preconditioning of Deeply Depleted Cells, Minimizing Heat Dissipation During Initial Charge Cycle
- Automatic Power-Down when Input Power Removed
- Temperature Range: -20°C to +85°C
- Packaging: 6-Pin SOT-23A

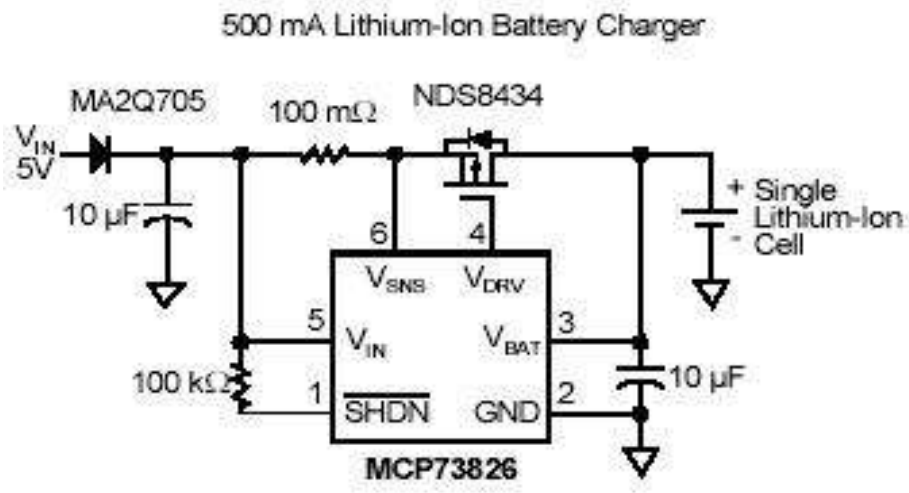

MCP73827 >>

MCP73828 >>

<< BACK

MCP73827

Online Datasheet

Features:

- Linear Charge Management Controller for Single Lithium-Ion Cells
- High Accuracy Preset Voltage Regulation: ±1% (max.)
- Two Preset Voltage Regulation Options:
  4.1V, MCP73827-4.1
  4.2V, MCP73827-4.2
- Programmable Charge Current
- Automatic Cell Preconditioning of Deeply Depleted Cells, Minimizing Heat Dissipation During Initial Charge Cycle
- Charge Status Output for LED Drive or Microcontroller Interface
- Charge Current Monitor Output
- Automatic Power-Down when Input Power Removed
- Temperature Range: -20°C to +85°C
- Packaging: 8-Pin MSOP

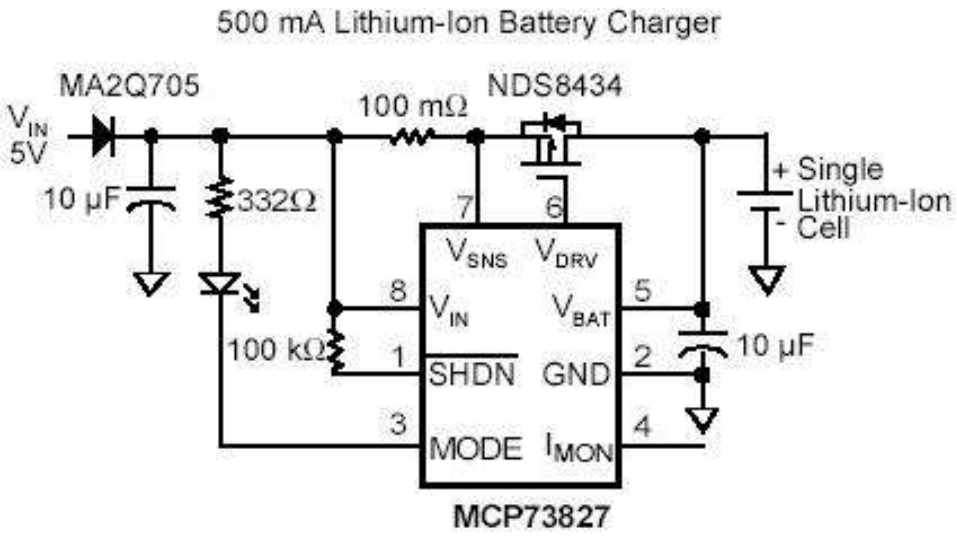

MCP73826 >>

MCP73828 >>

<< BACK

MCP73828

Online Datasheet

Features:

- Linear Charge Management Controller for Single Lithium-Ion Cells
- High Accuracy Preset Voltage Regulation: ±1% (max.)
- Two Preset Voltage Regulation
  4.1V, MCP73828-4.1
  4.2V, MCP73828-4.2
- Programmable Charge Current
- Automatic Cell Preconditioning of Deeply Depleted Cells, Minimizing Heat Dissipation During Initial Charge Cycle
- Charge Complete Output CD10 for LED Drive or Microcontroller Interface
- Continuous Temperature Monitoring
- Automatic Power-Down when Input Power Removed
- Temperature Range: -20°C to +85°C
- Packaging: 8-Pin MSOP

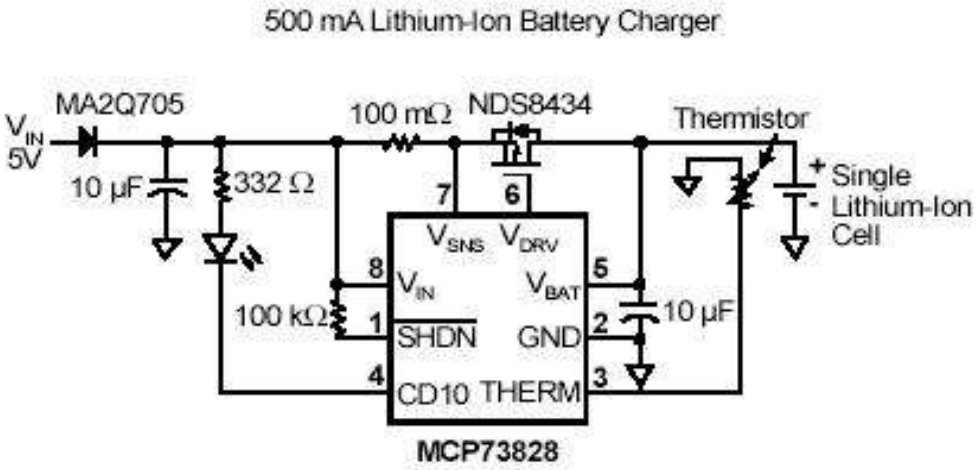

MCP73826 >>

MCP73827 >>

<< BACK

MCP73853/5

Online Datasheet

Features:

- Linear Charge Management Controllers
  - Integrated Pass Transistor
  - Integrated Current Sense
  - Reverse Blocking Protection
- High-Accuracy Preset Voltage Regulation: ±0.5% (max.)
- Two Selectable Voltage Regulation Options: 4.1V, 4.2V
- Programmable Charge Current
- USB Compatible Charge Current Settings
- Programmable Safety Charge Timers
- Preconditioning of Deeply Depleted Cells
- Automatic End-of-Charge Control
- Optional Continuous Cell Temperature Monitoring **- MCP73853**
- Charge Status Output for Direct LED Drive
- Fault Output for Direct LED Drive **- MCP73853**
- Automatic Power-Down
- Thermal Regulation
- Temperature Range: -40°C to +85°C
- Packaging:
  16-Lead, 4x4 mm QFN **(MCP73853)**
  10-Lead, 3x3 mm DFN **(MCP73855)**

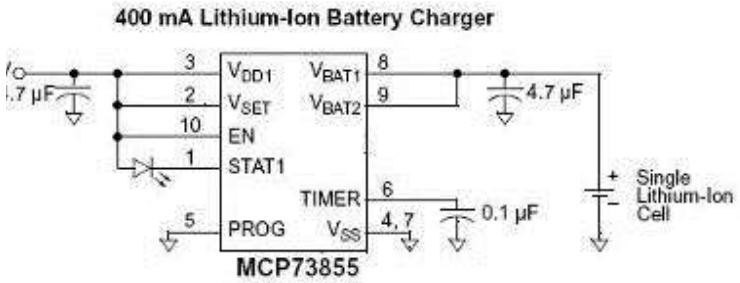

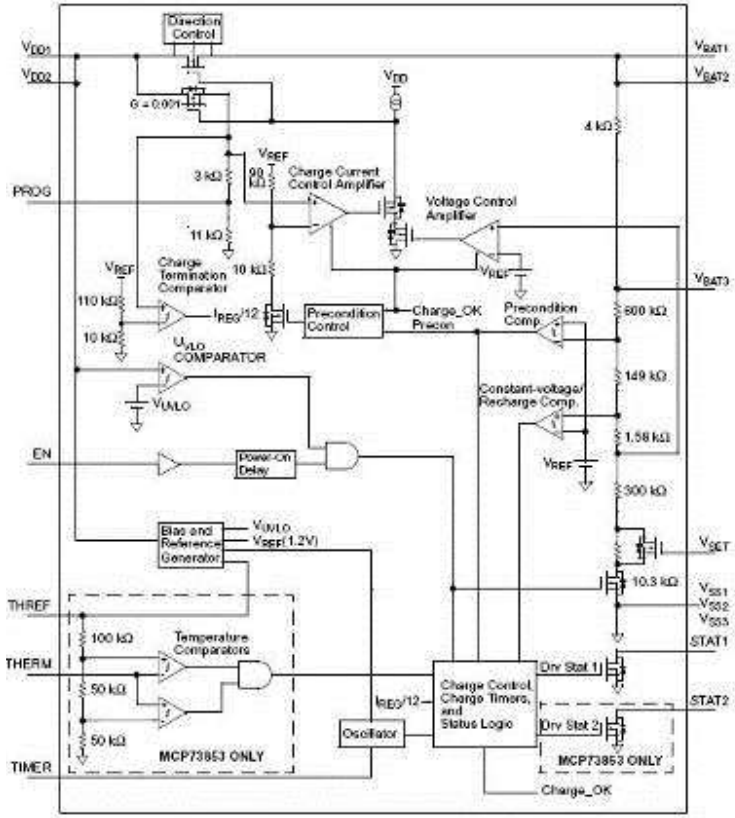

<< BACK

MCP73841/2/3/4

Online Datasheet

Features:

- Linear Charge Management Controllers
- High-Accuracy Preset Voltage Regulation: ±0.5% (max.)
- Four Preset Voltage Regulation Options:
  - 4.1V, MCP73841-4.1, MCP73843-4.1
  - 4.2V, MCP73841-4.2, MCP73843-4.2
  - 8.2V, MCP73842-8.2, MCP73844-8.2
  - 8.4V, MCP73842-8.4, MCP73844-8.4
- Programmable Charge Current
- Programmable Safety Charge Timers
- Preconditioning of Deeply Depleted Cells
- Automatic End-of-Charge Control
- Optional Continuous Cell Temperature Monitoring (**MCP73841** and **MCP73842**)
- Charge Status Output for Direct LED Drive
- Automatic Power-Down when Input Power Removed
- Temperature Range: -40°C to 85°C
- Packaging:
  - MSOP-10: MCP73841, MCP73842
  - MSOP-8: MCP73843, MCP73844

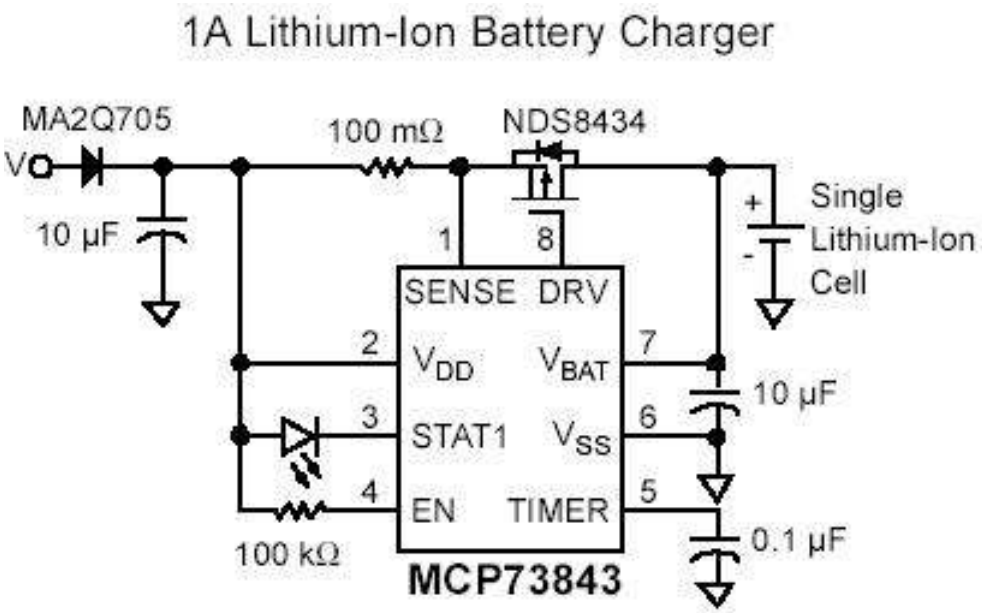

<< BACK

MCP73830/L

Online Datasheet

Features:

- Complete Linear Charge Management Controller
  - Integrated Pass Transistor
  - Integrated Current Sense
  - Integrated Reverse Discharge Protection
- Constant Current/Constant Voltage Operation
- High Accuracy Preset Voltage Regulation: 4.20V + 0.75% over temperature
- Programmable Charge Current:
  - MCP73830L: 20 mA – 200 mA
  - MCP73830: 100 mA – 1000 mA
- Soft-start to avoid inrush current
- Preconditioning: 10% and No Preconditioning
- Fixed Elapse Timer: 0 Hour or 4 Hours
- Fixed Preconditioning Timer: 1 Hour
- Automatic Recharge: Optional
- Automatic End-of-Charge Control Termination: 7.5%/10%
- Automatic Power-Down when Input Power Removed
- Under Voltage Lockout (UVLO)
- Chip/Charge Enable Pin (CE)
- Packaging: TDFN-6 (2x2 mm)
- Pin-to-pin functional compatible to LTC4065LX
- Temperature Range: -40°C to +85°C

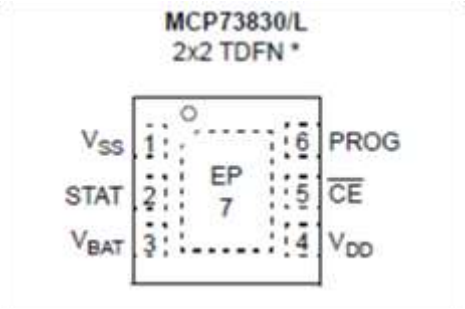

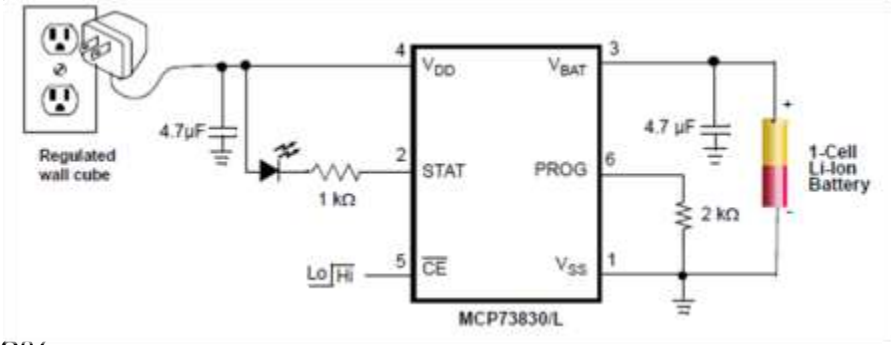

<< BACK

MCP73831/2

Online Datasheet

Features:

- Linear Charge Management Controller:
  - Integrated Pass Transistor
  - Integrated Current Sense
  - Reverse Discharge Protection
- High Accuracy Preset Voltage Regulation: ±0.75%
- Four Voltage Regulation Options:
  4.20V, 4.35V, 4.40V, 4.50V
- Programmable Charge Current: 15mA to 500mA
- Selectable Preconditioning: 10%, 20%, 40%, or Disable
- Selectable End-of-Charge Control:
  5%, 7.5%, 10%, or 20%
- Charge Status Output
  Tri-State Output - **MCP73831**
  Open-Drain Output - **MCP73832**
- Automatic Power-Down
- Thermal Regulation
- Temperature Range: -40°C to +85°C
- Packaging: 8-Pin, 2x3 mm DFN, 5-Lead, SOT-23

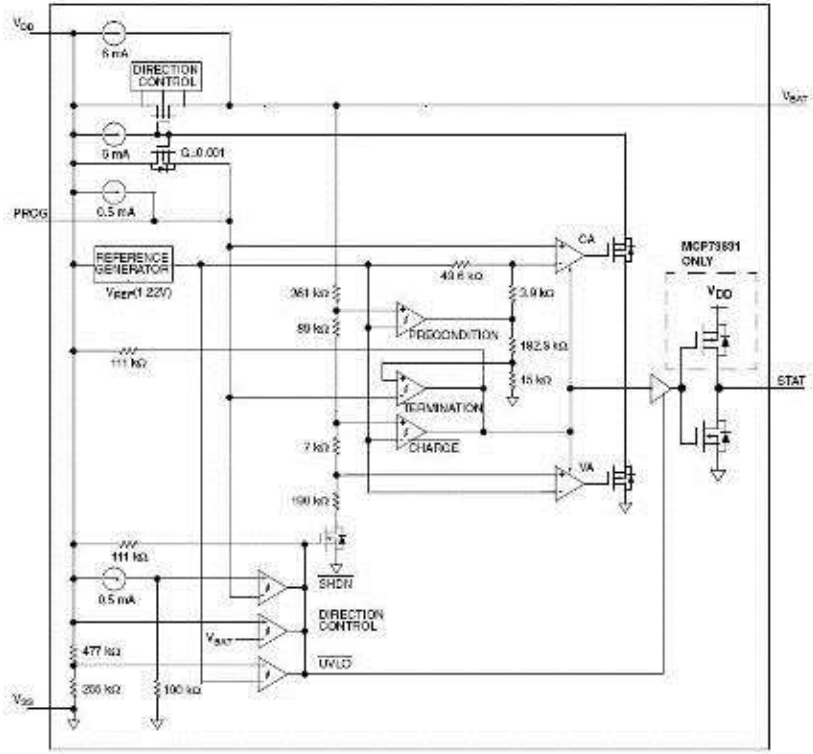

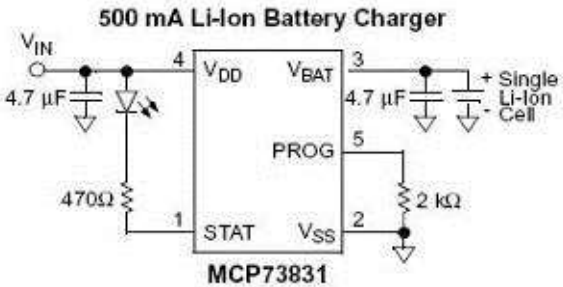

<< BACK

MCP73833/4

Online Datasheet

Features:

- Complete Linear Charge Management Controller: Integrated Pass Transistor, Current Sense and Reverse Discharge Protection
- Constant Current / Constant Voltage Operation with Thermal Regulation
- High Accuracy Preset Voltage Regulation: 4.2V, 4.35V, 4.4V, or 4.5V, ±0.75%
- Programmable Charge Current: 1A (max.)
- Preconditioning of Deeply Depleted Cells
  - Selectable Current Ratio
  - Selectable Voltage Threshold
- Automatic End-of-Charge Control
  - Selectable Current Threshold
  - Selectable Safety Time Period
- Automatic Recharge
  - Selectable Voltage Threshold
- Two Charge Status Outputs
- Cell Temperature Monitor
- Low-Dropout Linear Regulator Mode
- Automatic Power-Down when Input Power Removed
- Under Voltage Lockout
- Available Packages: 3mm x 3mm DFN-10,MSOP-10

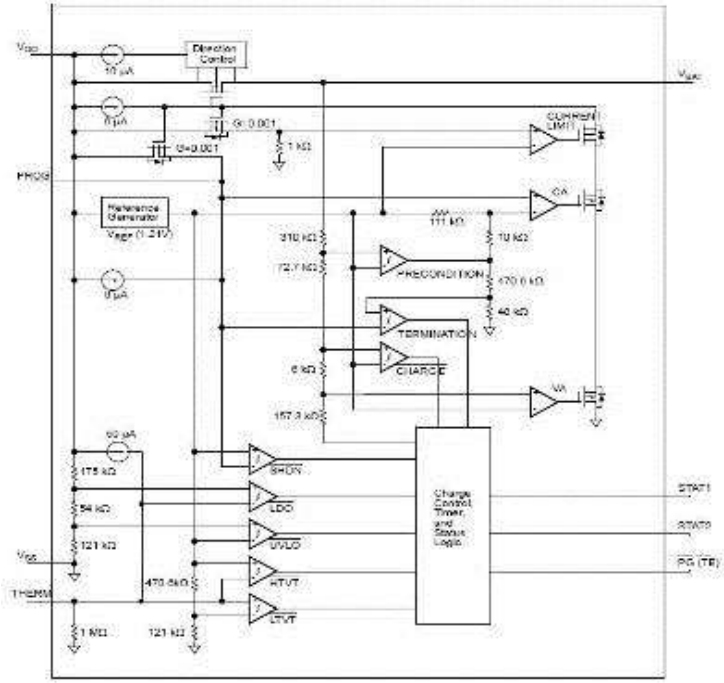

1A Li-Ion Battery Charger

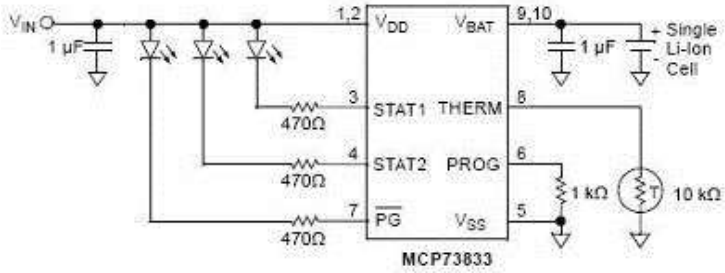

<< BACK

MCP73837/8

Online Datasheet

Features:

- High Accuracy Preset Voltage Regulation: + 0.5%
- Available Voltage Regulation Options: 4.20V, 4.35V, 4.4V, or 4.5V
- Complete Linear Charge Management Controller:
  - Autonomous Power Source Selection
  - Integrated Pass Transistors
  - Integrated Current Sense
  - Integrated Reverse Discharge Protection
- Constant Current (CC) / Constant Voltage (CV) Operation with Thermal Regulation
- Selectable USB-Port Charge Current:
  - Low: 1 Unit Load / High: 5 Unit Loads
- Programmable AC-Adapter Charge Current: 15mA to 1000mA
- Two Charge Status Outputs
- Power-Good Monitor: MCP73837
- Timer Enable: MCP73838
- Automatic Recharge:
  - Selectable Voltage Threshold
- Automatic End-of-Charge Control:
  - Selectable Charge Termination Current Ratio
  - Selectable Safety Timer Period
- Preconditioning of Deeply Depleted Cells - can be disabled
- Battery Cell Temperature Monitor
- UVLO (Undervoltage Lockout)
- Automatic Power-Down when Input Power is Removed
- Low-Dropout (LDO) Linear Regulator Mode
- Temperature Range: -40°C to 85°C
- Packaging:
  10-Lead 3 mm x 3 mm DFN, 10-Lead MSOP

Functional Block Diagram (MCP73837/8)

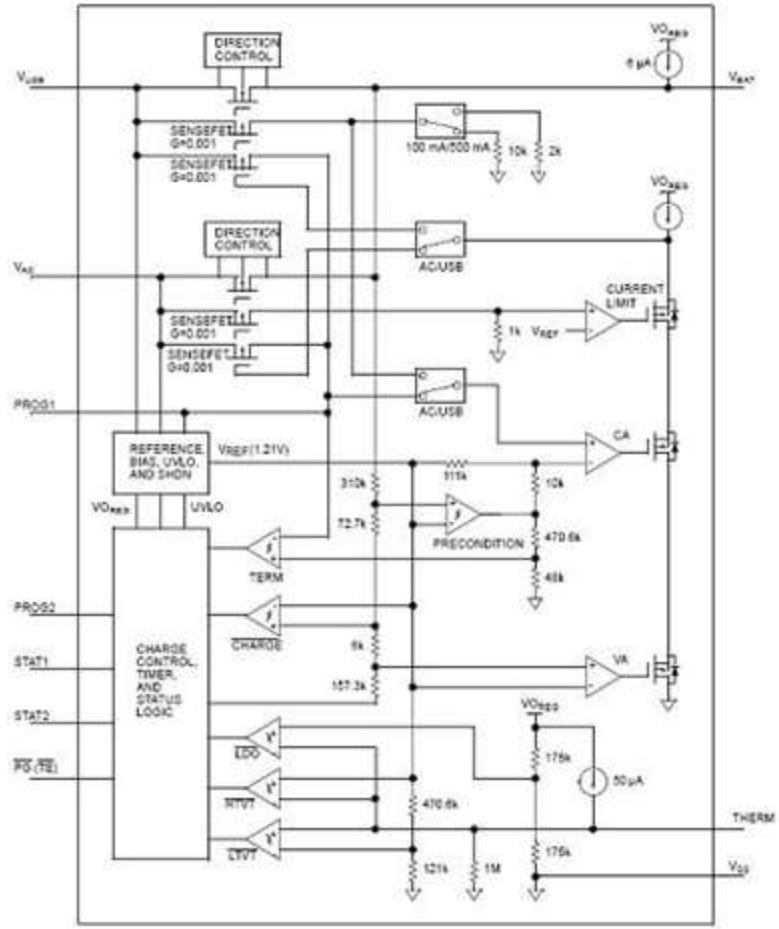

<< BACK

MCP73871

Online Datasheet

Features:

- Integrated System Load Sharing and Battery Charge Management
  - Simultaneously Power the System and Charge the Li-Ion Battery
  - Resistor Programmable Fast Charge Current: 50mA to 1A
- Integrated Pass Transistors, Current Sense and Reverse Discharge Protection
- Selectable Input Power Sources: USB Port or AC-DC Wall Adapter
- Preset High Accuracy Charge Voltage Options: 4.10V, 4.20V, 4.35V or 4.40V
- Regulation Tolerance: ±0.5% (typ.)
- 0.1°C Preconditioning for Deeply Depleted Cells
- Resistor Programmable Termination Set Point
- Automatic Recharge and End-of-Charge Control
- Safety Timer With Timer Enable/Disable Control
- Battery Cell Temperature Monitor
- Undervoltage Lockout (UVLO)
- Low Battery Status Indicator (LBO)
- Power-Good Status Indicator (PG)
- Temperature Range: -40°C to 85°C
- Packaging: 20-Lead QFN (4 mm x 4 mm)

Typical Application Circuit

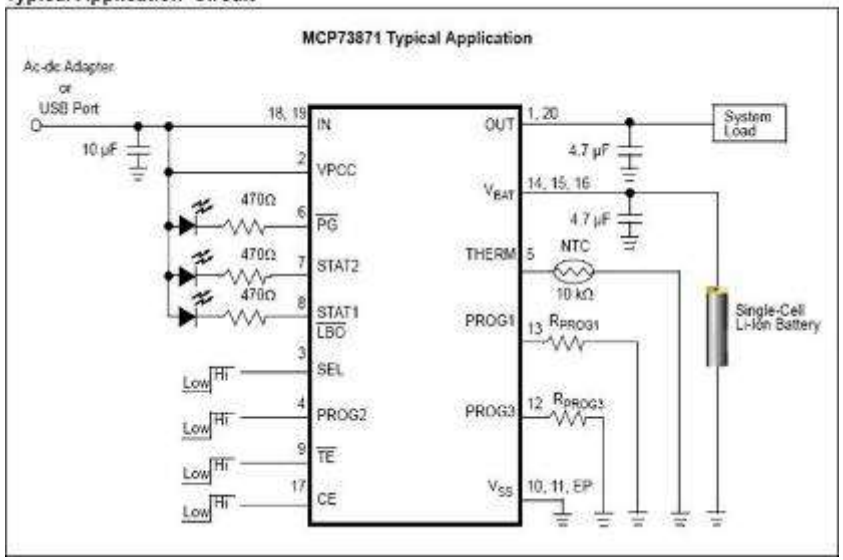

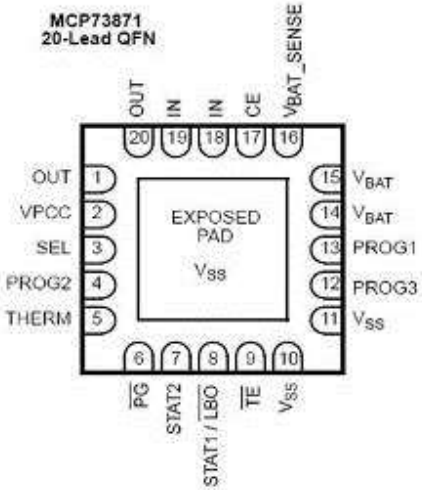

<< BACK

MCP73113/4

Online Datasheet

Features:

- Complete Linear Charge Management Controller:
- **Integrated Input Overvoltage Protection**
- Integrated Pass Transistor
- Integrated Current Sense
- Integrated Reverse Discharge Protection
- Constant Current / Constant Voltage Operation with Thermal Regulation
- 4.15V Undervoltage Lockout (UVLO)
- **18V Absolute Maximum Input with OVP: 6.5V(MCP738113) and 5.8V (MCP738114)**
- High Accuracy Preset Voltage Regulation Through Full Temperature Range (-5°C to 55°C): ±0.5%
- Battery Charge Voltage Options: 4.10V, 4.20V, 4.35V or 4.4V
- Resistor Programmable Fast Charge Current: 130mA to 1100mA
- Preconditioning of Deeply Depleted Cells
- Integrated Precondition Timer
- Automatic End-of-Charge Control:
- Automatic Recharge: Available Options: 95% or Disable
- Charge Status Output - Two Style Options
- Soft start
- Temperature Range: -40°C to +85°C
- Packaging: DFN-10 (3 mm x 3 mm)

Functional Block Diagram

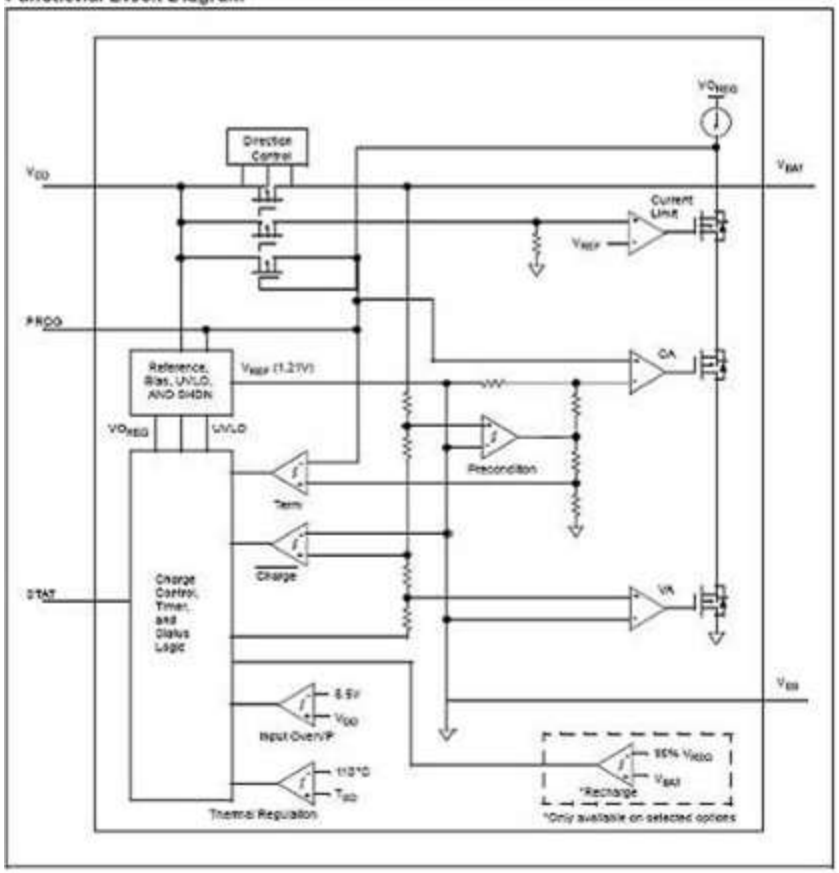

<< BACK

MCP73123/223

Online Datasheet

Features:

- Complete Linear Charge Management Controller:
  - Integrated Input Overvoltage Protection, Pass Transistor, Current Sense, Reverse Discharge Protection
- Constant Current / Constant Voltage Operation w/ Thermal Regulation
- 4.15V Undervoltage Lockout (UVLO)
- 18V Absolute Maximum Input with OVP:
  - 6.5V (MCP73123) and 13V (MCP73223)
- High Accuracy Preset Voltage Regulation Through Full Temperature Range (-5°C to +55°C):
  - ±0.5% (MCP73123) and ±0.6% (MCP73223)
- Battery Charge Voltage Options:
  - 3.6V (MCP73123) and 7.2V (MCP73223)
- Resistor Programmable Fast Charge Current: 30mA to 1100mA
- Preconditioning of Deeply Depleted Cells: Avail Options: 10% or Disable
- Integrated Precondition Timer: 32 Minutes or Disable
- Automatic End-of-Charge Control:
  - Selectable Minimum Current Ratio: 5%, 7.5%, 10% or 20%
  - Elapse Safety Timer: 4 HR, 6 HR, 8 HR or Disable
- Automatic Recharge: Available Options: 95% or Disable
- Factory Preset Charge Status Output: On/Off or Flashing
- Soft Start
- Temperature Range: -40°C to +85°C
- Packaging: DFN-10 (3 mm x 3 mm)

MCP73123/223
3x3 DFN *

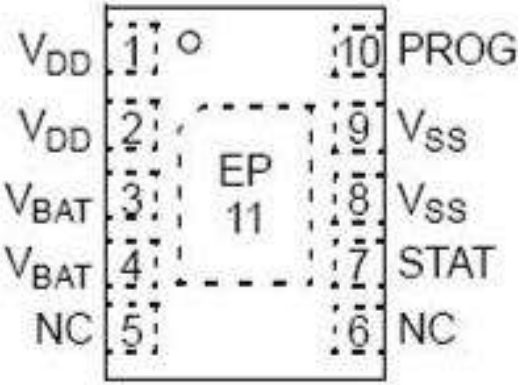

<< BACK

MCP73213

Online Datasheet

Features:

- Complete Linear Charge Management Controller:
  - Integrated Input Overvoltage Protection, Pass Transistor, Current Sense, Reverse Discharge Protection
- Constant Current / Constant Voltage Operation w/Thermal Regulation
- 4.15V Undervoltage Lockout (UVLO)
- 13V Input Overvoltage Protection
- High Accuracy Preset Voltage Regulation Through Full Temperature Range (-5°C to +55°C): ±0.6%
- Battery Charge Voltage Options: 8.20V, 8.40V, 8.7V or 8.8V
- Resistor Programmable Fast Charge Current: 130mA to 1100mA
- Preconditioning of Deeply Depleted Cells: 10% or Disable
- Integrated Precondition Timer: 32 Minutes or Disable
- Automatic End-of-Charge Control:
  - Selectable Minimum Current Ratio: 5%, 7.5%, 10% or 20%
  - Elapse Safety Timer: 4 HR, 6 HR, 8 HR or Disable
- Automatic Recharge: Available Options: 95% or Disable
- Factory Preset Charge Status Output: On/Off or Flashing
- Soft Start
- Temperature Range: -40°C to +85°C
- Packaging: DFN-10 (3 mm x 3 mm)

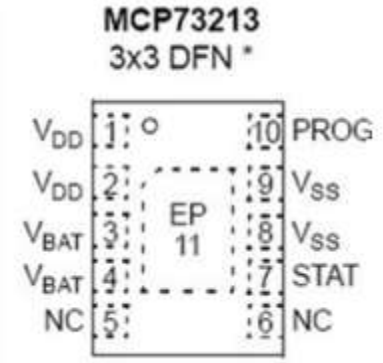

<< BACK

MCP73811/2

Online Datasheet

Features:

- Complete Linear Charge Management Controller
  - Integrated Pass Transistor
  - Integrated Current Sense
  - Integrated Reverse Discharge Protection
- Constant Current / Constant Voltage Operation with Thermal Regulation
- High Accuracy Preset Voltage Regulation: ±1%
- Voltage Regulation: 4.20V
- Selectable Charge Current:
  - **MCP73811**: 85mA / 450mA
- Programmable Charge Current:
  - **MCP73812**: 50mA to 500mA
- Minimum External Components Required:
  - **MCP73811**: 2 Ceramic Capacitors
  - **MCP73812**: 2 Ceramic Capacitors and 1 Resistor
- No Preconditioning
- External End-of-Charge Control
- Automatic Power-Down when Input Power Removed
- Active High Charge Enable
- Temperature Range: -40°C to +85°C
- Packaging: 5-Lead SOT-23

450 mA Li-Ion Battery Charger

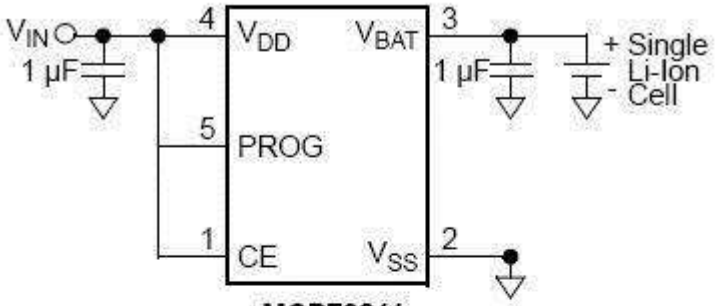

MCP73811

500 mA Li-Ion Battery Charger

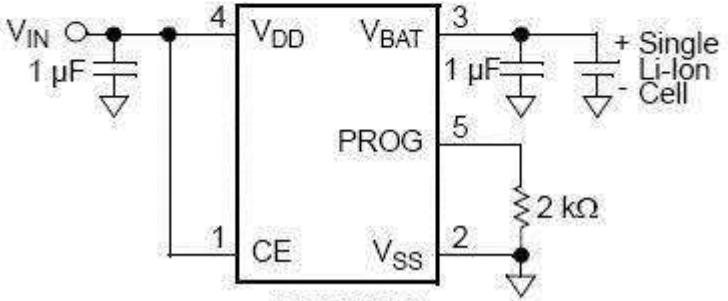

MCP73812

<< BACK

MCP3301

Online Datasheet

Features:

- Full Differential Inputs
- 13-bit Resolution
- ±1 LSB (max.) DNL
- ±1 LSB (max.) INL (MCP3301-B)
- ±2 LSB (max.) INL (MCP3301-C)
- Single Supply Operation: 2.7V to 5.5V
- 100 ksps Sampling Rate with 5V Supply Voltage
- 50 ksps Sampling Rate with 2.7V Supply Voltage
- 50nA (typ.) Standby Current
- 450µA (max.) Active Current at 5V
- Industrial Temperature Range: -40°C to +85°C
- 8-Pin MSOP, PDIP and SOIC Packages
- MXDEV™ Evaluation Kit Available

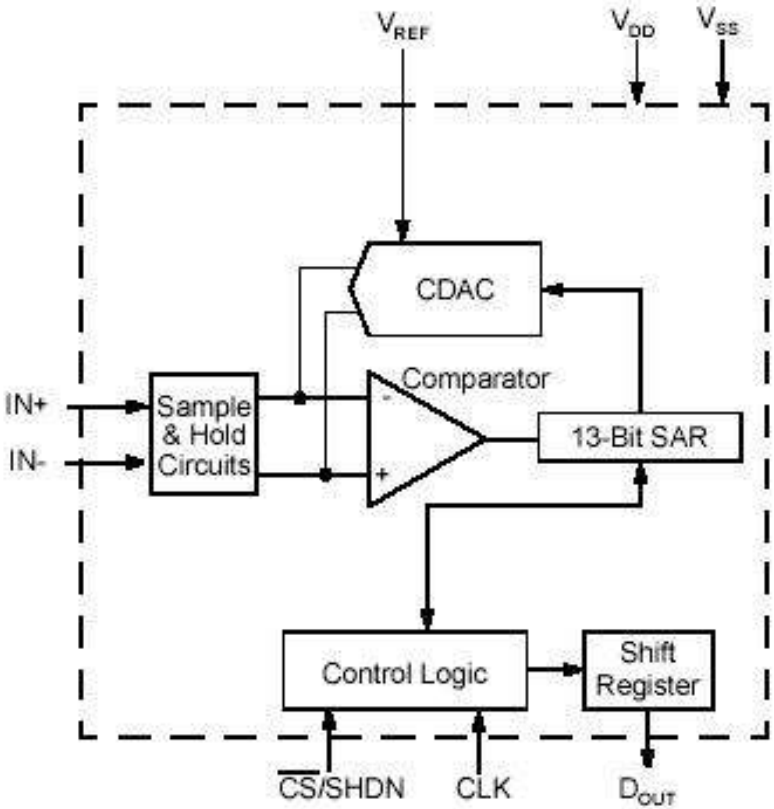

MCP3302/4 >>

<< BACK

MCP3302/4

Online Datasheet

Features:

- Full Differential Inputs
- 13-bit Resolution
- MCP3302: 2 Differential of 4 Single Ended Inputs
- MCP3304: 4 Differential or 8 Single Ended Inputs
- ±1 LSB (max.) DNL
- ±1 LSB (max.) INL (MCP3302/04-B)
- ±2 LSB (max.) INL (MCP3302/04-C)
- Single Supply Operation: 2.7V to 5.5V
- 100 ksps Sampling Rate with 5V Supply Voltage
- 50 ksps Sampling Rate with 2.7V Supply Voltage
- 50nA (typ.) Standby Current
- 450µA (max.) Active Current at 5V
- Industrial Temperature Range: -40°C to +85°C
- 14 and 16-Pin PDIP, SOIC and TSSOP Packages
- MXDEV™ Evaluation Kit Available

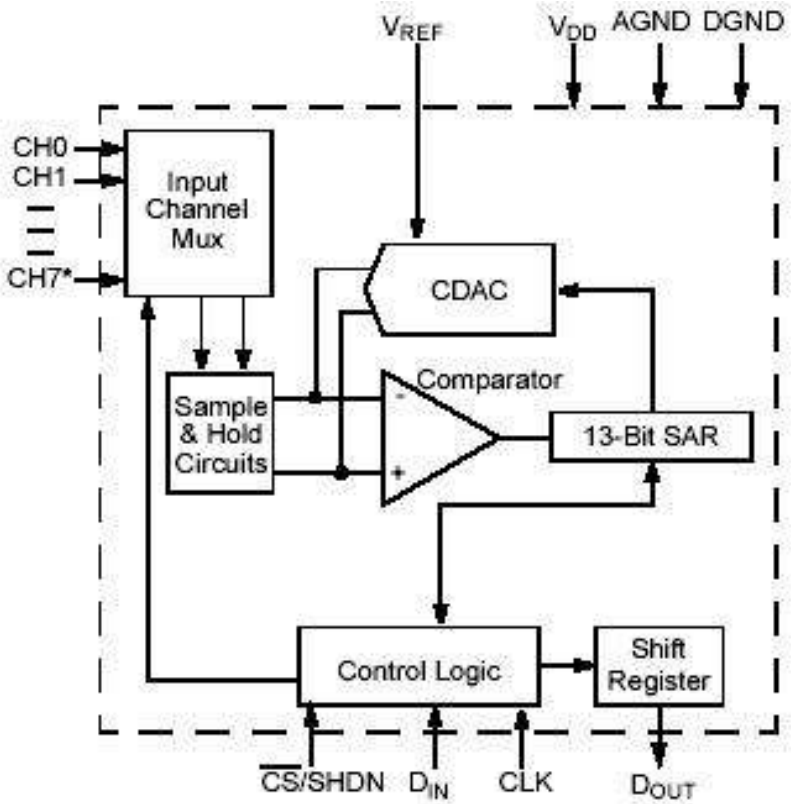

* Channels 5-7 available on MCP3304 Only

MCP3301 >>

<< BACK

MCP3221

Online Datasheet

Features:

- 12-bit Resolution
- ±1 LSB DNL, ±2 LSB INL (max.)
- 250µA (max.) Conversion Current
- 5nA (typ.) Standby Current
- I²C™ Compatible Serial Interface:
  100 kHz Standard Mode
  400 kHz Fast Mode
- Up to 8 Devices on a Single 2-Wire Bus
- Single-Ended Analog Input Channel
- On-Chip Sample and Hold
- On-Chip Conversion Clock
- Single-Supply: 2.7V to 5.5V
- Temperature Range:
  Industrial: -40°C to +85°C
  Extended: -40°C to +125°C
- Small SOT-23 Package

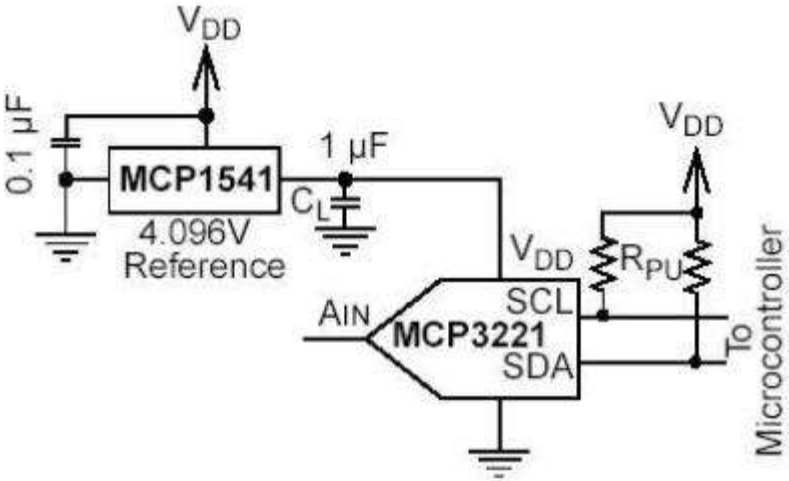

Stable Power and Reference Configuration

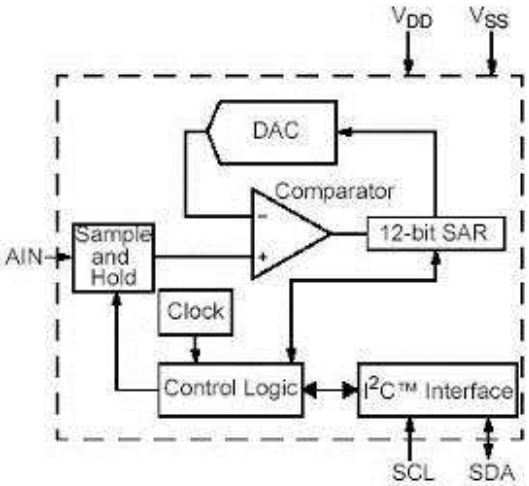

<< BACK

MCP3201

Online Datasheet

Features:

- 12-bit Resolution
- ±1 LSB (max.) DNL
- ±1 LSB (max.) INL (MCP3301-B)
- ±2 LSB (max.) INL (MCP3301-C)
- SPI Serial Interface: Modes 0,0 and 1,1
- Single Supply Operation: 2.7V to 5.5V
  100 ksps (max.) Sampling Rate at 5V
  50 ksps (max.) Sampling Rate at 2.7V
- 500nA (typ.) Standby Current
- 400µA (max.) Active Current at 5V
- On-Chip Sample and Hold
- Industrial Temperature Range: -40°C to +85°C
- 8-Pin MSOP, PDIP, SOIC and TSSOP Packages

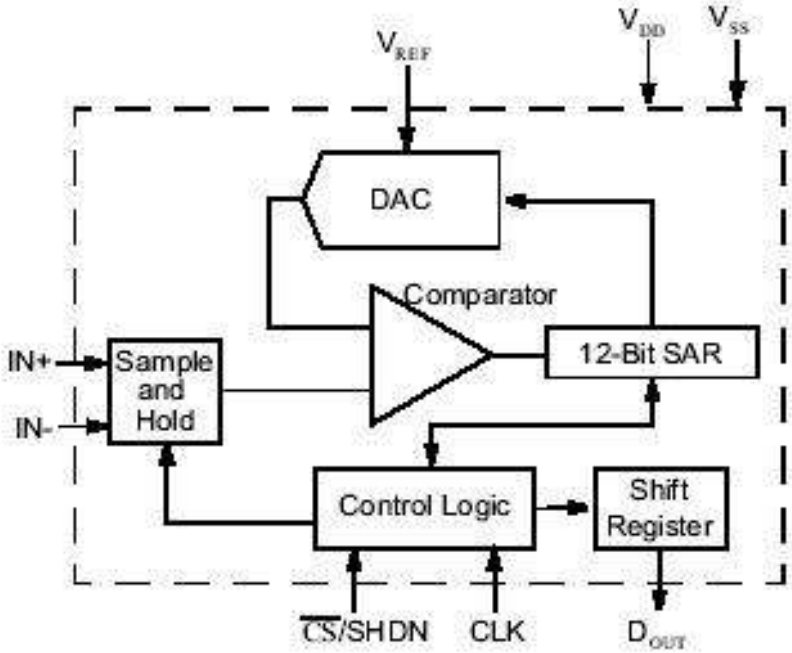

MCP3204/8 >>
MCP3202 >>
<< BACK

MCP3202

Online Datasheet

Features:

- 12-bit Resolution
- ±1 LSB (max.) DNL
- ±1 LSB (max.) INL (MCP3302-B)
- ±2 LSB (max.) INL (MCP3302-C)
- 2 Input Channels
- Analog Inputs Programmable as Single-Ended or Pseudo-Differential Pairs
- SPI Serial Interface: Modes 0,0 and 1,1
- Single Supply Operation: 2.7V to 5.5V
  100 ksps (max.) Sampling Rate at 5V
  50 ksps (max.) Sampling Rate at 2.7V
- 500nA (typ.) Standby Current
- 550µA (max.) Active Current at 5V
- On-Chip Sample and Hold
- Industrial Temperature Range: -40°C to +85°C
- 8-Pin MSOP, PDIP, SOIC and TSSOP Packages

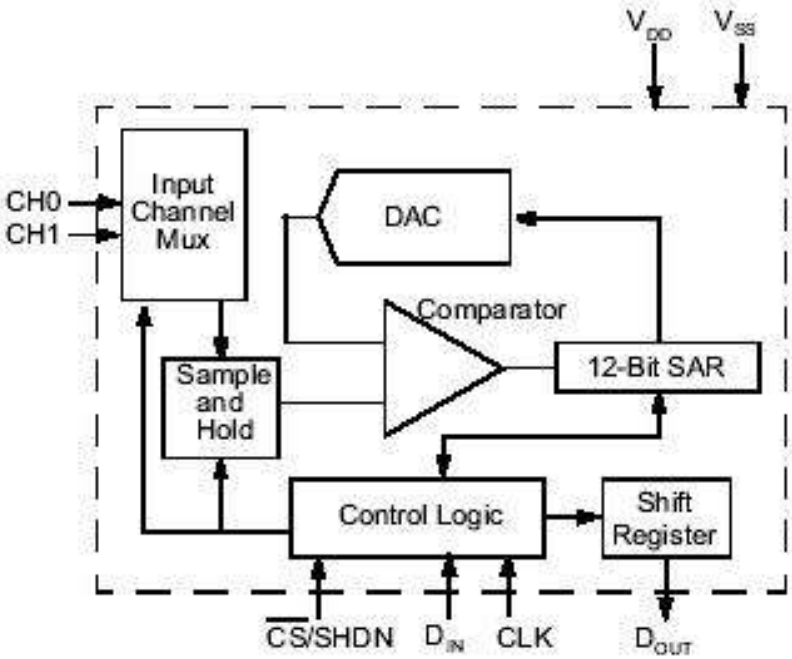

MCP3204/8 >>
MCP3201 >>
<< BACK

MCP3204/8

Online Datasheet

Features:

- 12-bit Resolution
- ±1 LSB (max.) DNL
- ±1 LSB (max.) INL (MCP3304/08-B)
- ±2 LSB (max.) INL (MCP3304/08-C)
- 4 (MCP3204) or 8 (MCP3208) Input Channels
- Analog Inputs Programmable as Single-Ended or Pseudo-Differential Pairs
- SPI Serial Interface: Modes 0,0 and 1,1
- Single Supply Operation: 2.7v to 5.5V
  100 ksps (max.) Sampling Rate at 5V
  50 ksps (max.) Sampling Rate at 2.7V
- 500nA (typ.) Standby Current
- 400µA (max.) Active Current at 5V
- On-Chip Sample and Hold
- Industrial Temperature Range: -40°C to +85°C
- PDIP, SOIC and TSSOP Packages

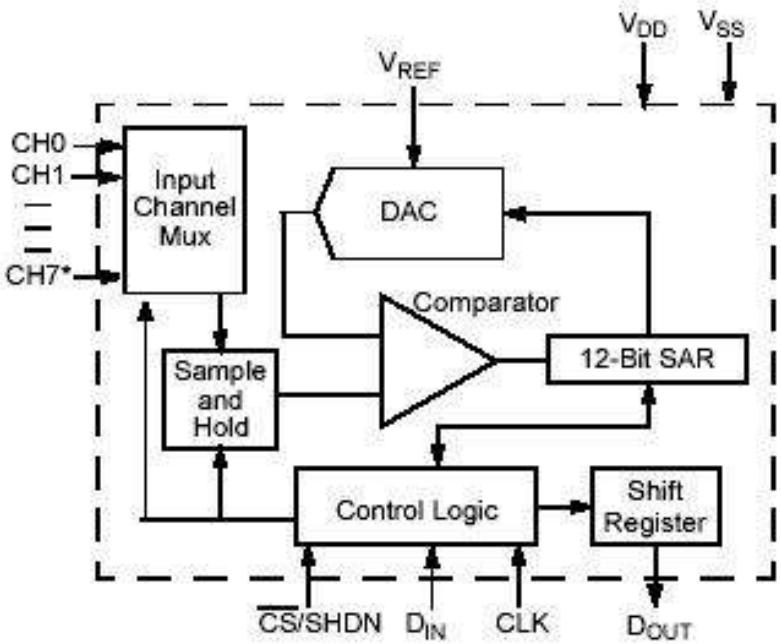

* **Note:** Channels 5-7 available on MCP3208 Only

MCP3202 >>
MCP3201 >>
<< BACK

MCP3021

Online Datasheet

Features:

- 10-bit Resolution
- Singly Supply: 2.7V to 5.5V
- ±1 LSB DNL, ±1 LSB INL (max.)
- 250µA (max.) Conversion Current
- 5nA (typ.) Standby Current, 1µA (max.)
- I²C™ Compatible Serial Interface
  100 kHz Standard Mode
  400 kHz Fast Mode
- 22.3 ksps in Fast Mode
- Up to 8 Devices on Single 2-Wire Bus
- Single-Ended Analog Input Channel
- On-Chip Sample and Hold
- On-Chip Conversion Clock
- Extended Temperature Range:
  -40°C to +125°C
- Small SOT-23 Package

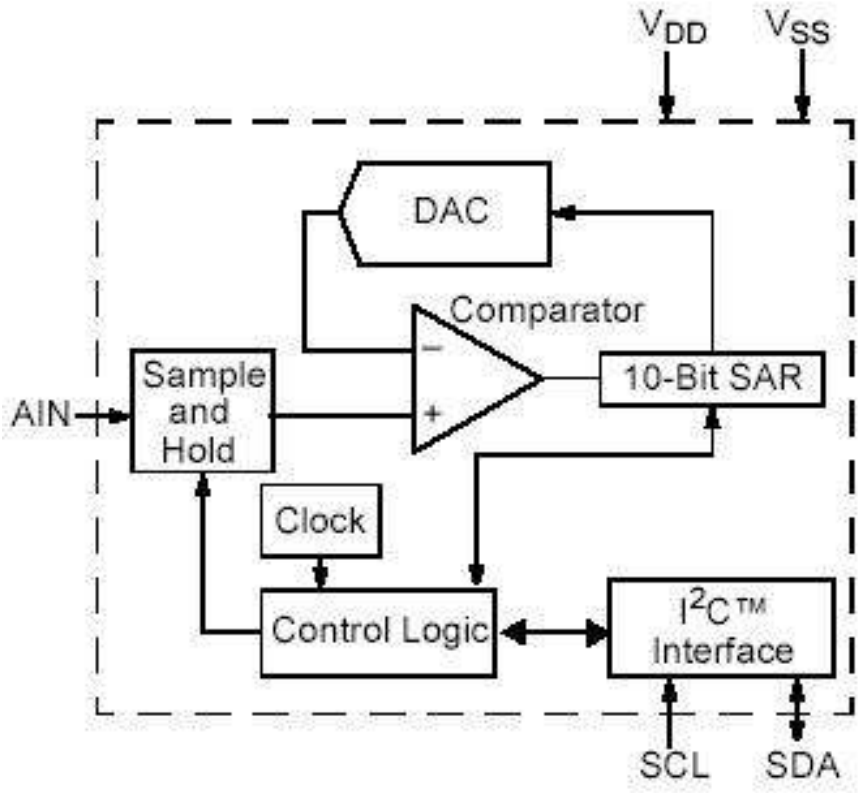

<< BACK

MCP3001

Online Datasheet

Features:

- 10-bit Resolution
- Singly Supply: 2.7V to 5.5V
  200 ksps Sampling Rate at 5V
  75 ksps Sampling Rate at 2.7V
- ±1 LSB DNL, ±1 LSB INL (max.)
- SPI Serial Interface: modes 0,0 and 1,1
- On-Chip Sample and Hold
- Low Power CMOS Technology:
  5nA (typ.) Standby Current, 2µA (max.)
  500µA (max.) Active Current at 5V
- Industrial Temperature Range:
  -40°C to +85°C
- Space Saving 8-Pin SOIC, MSOP, TSSOP and PDIP Packages

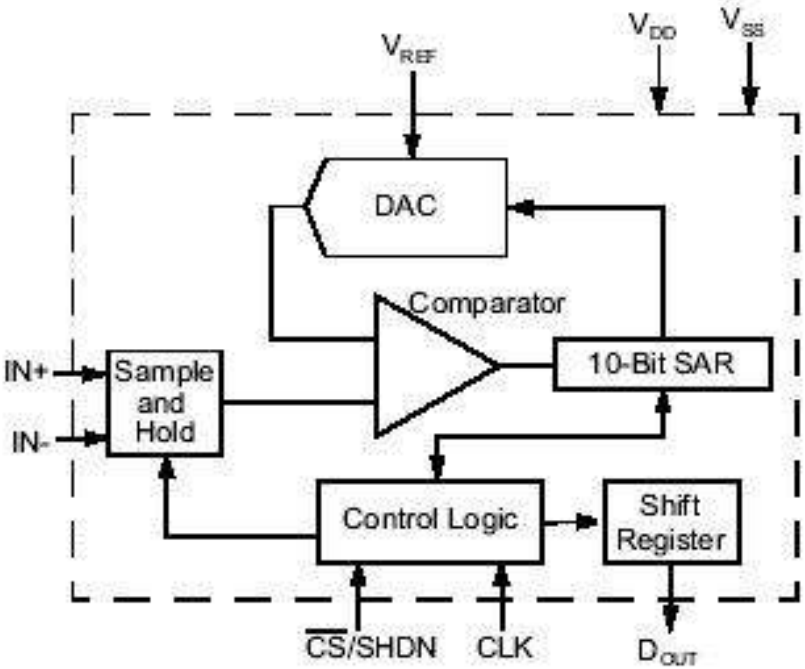

MCP3004/8 >>
MCP3002 >>
<< BACK

MCP3002

Online Datasheet

Features:

- 10-bit Resolution
- Singly Supply: 2.7V to 5.5V
  200 ksps Sampling Rate at 5V
  75 ksps Sampling Rate at 2.7V
- ±1 LSB DNL, ±1 LSB INL (max.)
- Analog Inputs:
  Single-Ended or Pseudo-Differential Pairs
- SPI Serial Interface: modes 0,0 and 1,1
- On-Chip Sample and Hold
- Low Power CMOS Technology:
  5nA (typ.) Standby Current, 2µA (max.)
  550µA (max.) Active Current at 5V
- Industrial Temperature Range:
  -40°C to +85°C
- Space Saving 8-Pin SOIC, MSOP, TSSOP and PDIP Packages

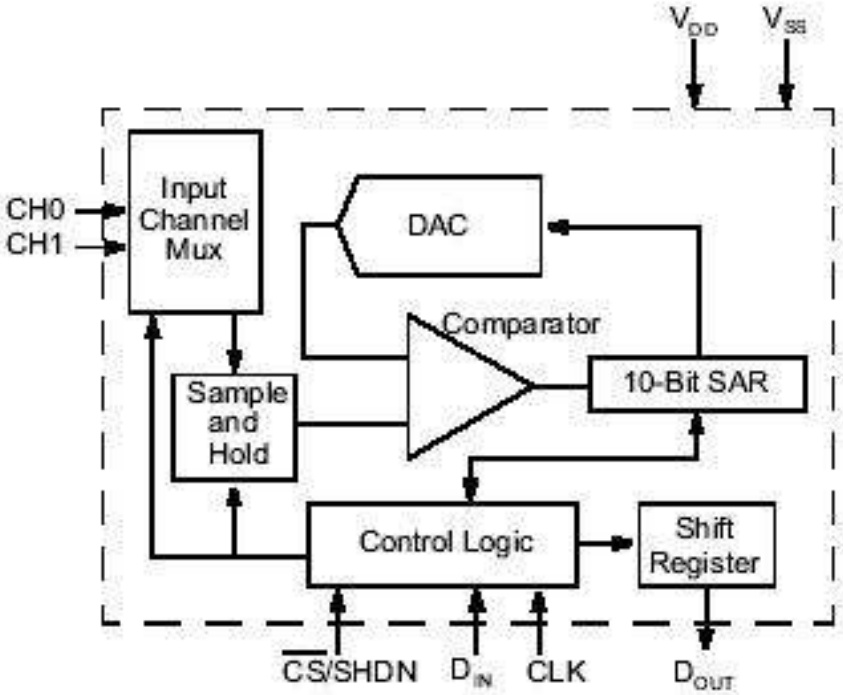

MCP3004/8 >>
MCP3001 >>
<< BACK

MCP3004/8

Online Datasheet

Features:

- 10-bit Resolution
- Singly Supply: 2.7V to 5.5V
  200 ksps Sampling Rate at 5V
  75 ksps Sampling Rate at 2.7V
- 4 (MCP3004) or 8 (MCP3008) Input Channels
- ±1 LSB DNL, ±1 LSB INL (max.)
- Analog Inputs:
  Single-Ended or Pseudo-Differential Pairs
- SPI Serial Interface: modes 0,0 and 1,1
- On-Chip Sample and Hold
- Low Power CMOS Technology:
  5nA (typ.) Standby Current, 2µA (max.)
  500µA (max.) Active Current at 5V
- Industrial Temperature Range:
  -40°C to +85°C
- SOIC, TSSOP and PDIP Packages

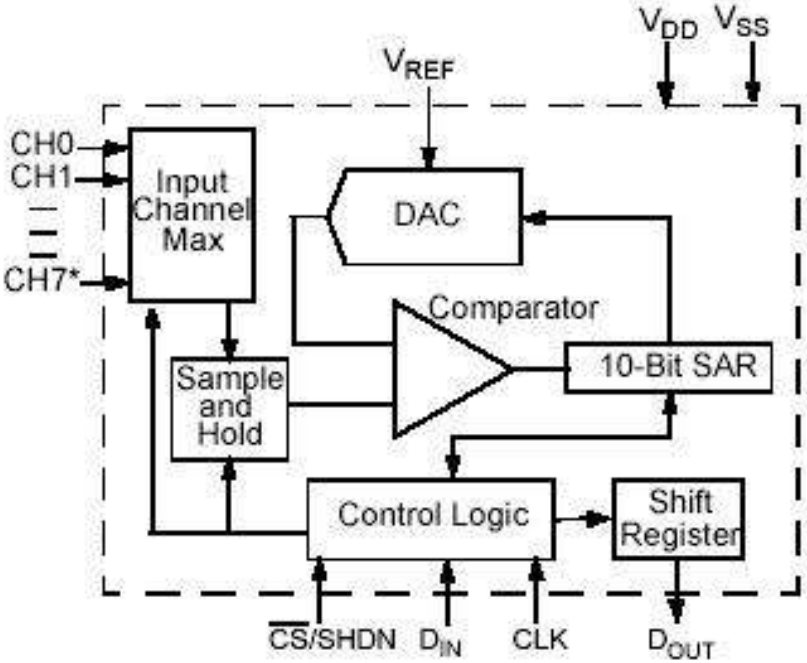

* **Note:** Channels 4-7 available on MCP3008 Only

MCP3002 >>
MCP3001 >>
<< BACK

MCP3550/1/3

Online Datasheet

Features:

- 22-bit ADC in Small 8-pin MSOP Package
- Ultra-Low Conversion Current (MCP3550/1):
  - 100µA (typ.) (V_{DD} = 2.7V)
  - 120µA (typ.) (V_{DD} = 5.0V)
- Low-Output Noise of 2.5µV_{RMS} with Effective Resolution of 21.9 bits (MCP3550/1)
- Offset Error: 3µV (typ.)
- Full Scale Error: 2ppm (typ.)
- INL Error: 6ppm (max.)
- Total Unadjusted Error Less Than 10ppm
- Data rate
  - MCP3550/1: 15sps
  - MCP3553: 60sps
- No Digital Filter Settling Time, Single-Command Conversions through 3-wire SPI Interface
- 50/60Hz Rejection (MCP3550/1)
- Differential Input with V_{SS} to V_{DD} Common Mode Range
- 2.7V to 5.5V Single-Supply Operation
- Extended Temperature Range: -40°C to +125°C

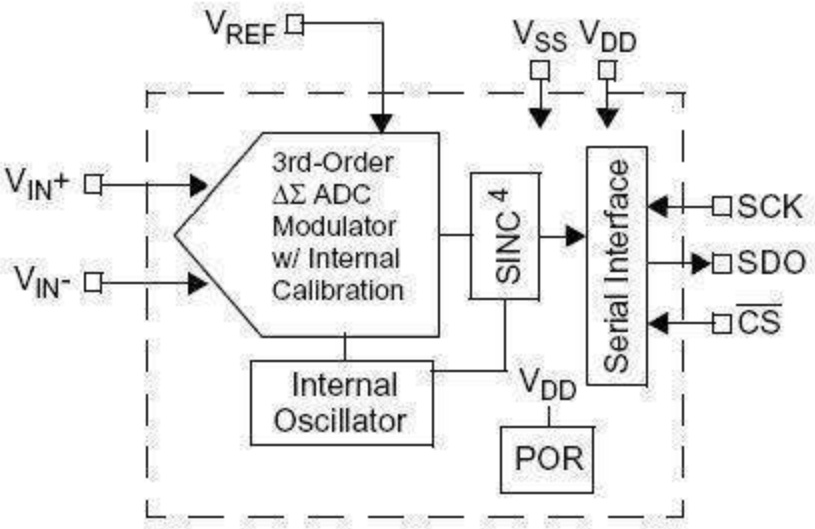

<< BACK

MCP3421

Online Datasheet

Features:

- 18-bit ΔΣ ADC in a SOT-23-6 package
- On-board Voltage Reference
- On-board Programmable Gain Amplifier: Gains of 1, 2, 4 or 8
- One-Shot or Continuous Conversion
- Low current consumption:
  145µA (typ.), V_{DD} = 3V, Continuous
  39µA (typ.), V_{DD} = 3V, One-Shot
- Programmable Data Rate Options:
  3.75 sps (18 bits), 15 sps (16 bits),
  60 sps (14 bits), 240 sps (12 bits)
- INL: 10ppm of FSR (FSR = 4.096V/PGA)
- Self Calibration of Internal Offset and Gain per each Conversion
- Differential Input Operation
- Supports I²C™ Serial Interface: Standard, Fast and High Speed Modes
- Single Supply Operation: 2.7V to 5.5V
- On-board Oscillator
- Extended Temperature Range: -40°C to 125°C

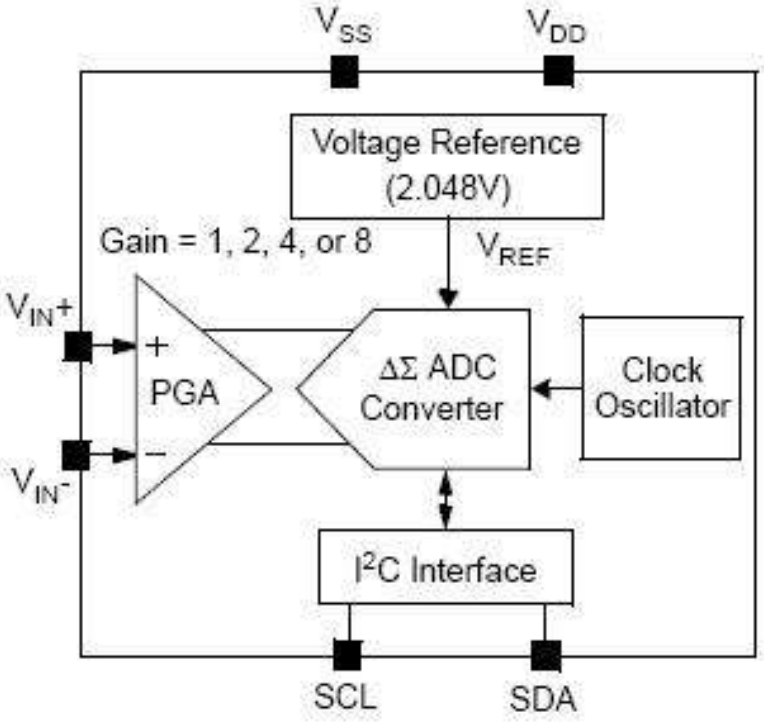

<< BACK

MCP3422/3/4

Online Datasheet

Features:

- 18-bit ΔΣ ADC
- Multi-Channel inputs
  2-channel (MCP3422/3)
  4-channel (MCP3424)
- On-board Voltage Reference
- On-board Programmable Gain Amplifier:
  Gains of 1, 2, 4 or 8
- One-Shot or Continuous Conversion
- Low current consumption:
  145µA (typ.), V_{DD} = 3V, Continuous
  39µA (typ.), V_{DD} = 3V, One-Shot
- Programmable Data Rate Options:
  3.75 sps (18 bits), 15 sps (16 bits),
  60 sps (14 bits), 240 sps (12 bits)
- INL: 10ppm of FSR (FSR = 4.096V/PGA)
- Self Calibration of Internal Offset and Gain per each Conversion
- Differential Input Operation
- Supports I²C™ Serial Interface
  User-selectable addressing (MCP3423/4)
- Single Supply Operation: 2.7V to 5.5V
- Extended Temperature Range: -40°C to 125°C

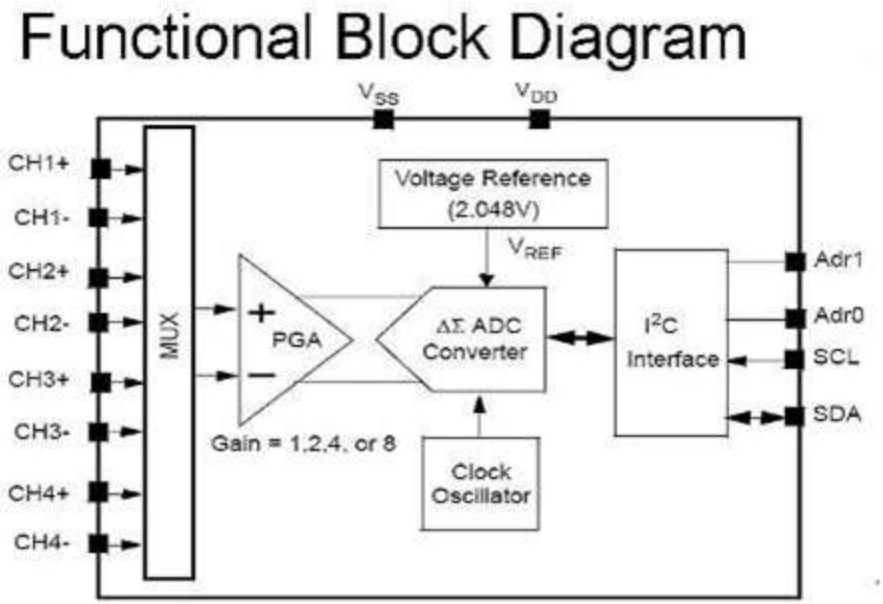

<< BACK

MCP3425

Online Datasheet

Features:

- 16-bit ΔΣ ADC in a SOT-23-6 package
- Differential Input Operation
- Self Calibration of Internal Offset and Gain per each Conversion
- On-board Voltage Reference
  Accuracy: 2.048V ±0.05%
- On-board Programmable Gain Amplifier:
  Gains of 1, 2, 4 or 8
- On-board Oscillator
- INL: 10ppm of FSR (FSR = 4.096V/PGA)
- Programmable Data Rate Options
  - 15 sps (16 bits), 60 sps (14 bits), 240 sps (12 bits)
- One-Shot or Continuous Conversion options
- One-Shot Conversion
  9.7µA (typ.) with 16-bit mode
  2.4µA (typ.) with 14-bit mode
  0.6µA (typ.) with 12-bit mode
- Low current consumption:
  145µA typical (V_{DD} = 3V, Continuous)
- Supports I²C™ Serial Interface:
  Standard, Fast and High Speed Modes
- Single Supply Operation: 2.7V to 5.5V
- Extended Temperature Range: -40°C to 125°C

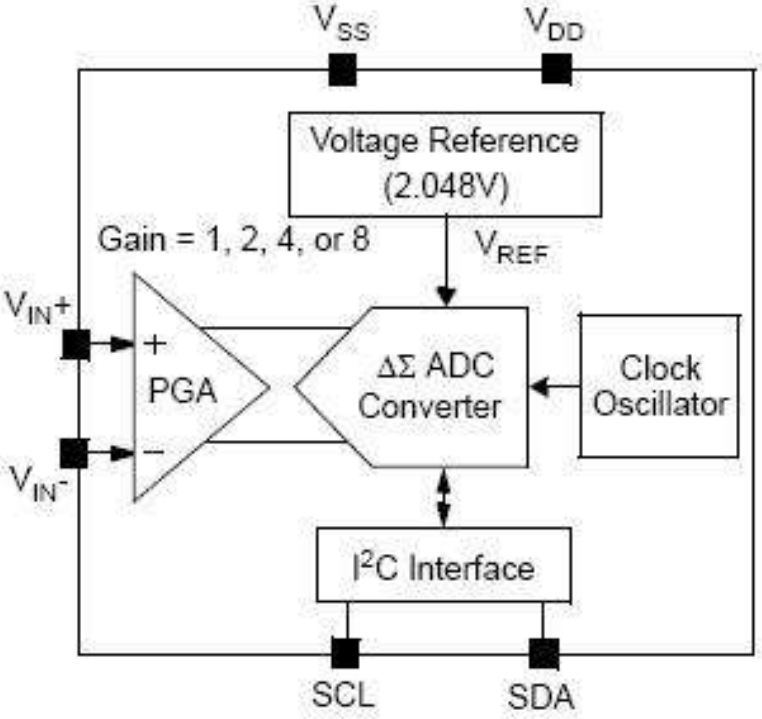

<< BACK

MCP3426/7/8

Online Datasheet

Features:

- 16-bit ΔΣ ADC
  - 2 channels: MCP3426 and MCP3427
  - 4 channels: MCP3428
- Differential Input Full Scale Range Operation
- Self Calibration of Internal Offset and Gain per each Conversion
- On-board Voltage Reference: Accuracy: 2.048V ±0.05%
- On-board Programmable Gain Amplifier: Gains of 1, 2, 4 or 8
- On-board Oscillator
- INL: 10ppm of FSR
- Programmable Data Rate Options
  - 5 sps (16 bits), 60 sps (14 bits), 240 sps (12 bits)
- One-Shot or Continuous Conversion options
- One-Shot Conversion
  9 µA (typ.) with 16-bit mode
  2.25 µA (typ.) with 14-bit mode
  0.56 µA (typ.) with 12-bit mode
- Low current consumption:
  135 µA typical (V_{DD} = 3V, Continuous)
- Supports I²C™ Serial Interface:
  User configurable address pins (MCP3427/MCP3428)
- Single Supply Operation: 2.7V to 5.5V
- Extended Temperature Range: -40°C to 125°C

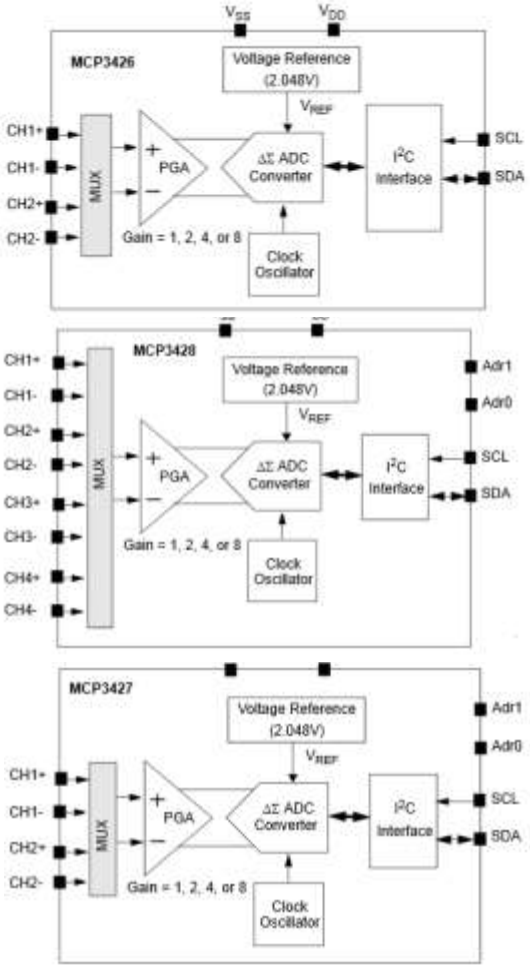

<< BACK

MCP39F501

Online Datasheet

Features:

- Power Monitoring Accuracy capable of 0.1% error across 4000:1 dynamic range
- Built-in calculations:
  - Active, Reactive and Apparent Power
  - RMS Current, RMS Voltage
  - Line Frequency, Power Factor
- Fast Calibration Routine
- Programmable Event Notifications such as overcurrentand voltage sag, surge protection
- 512 bytes User-accessible EEPROM
- Non-volatile On-chip Memory, no external memory required
- 2-wire UART interface supporting multiple devices on a single bus
- Low-Drift Internal Voltage Reference: 10 ppm/°C typical
- 28-lead 5x5 QFN package
- Extended Temperature Range : -40°C to +125°C

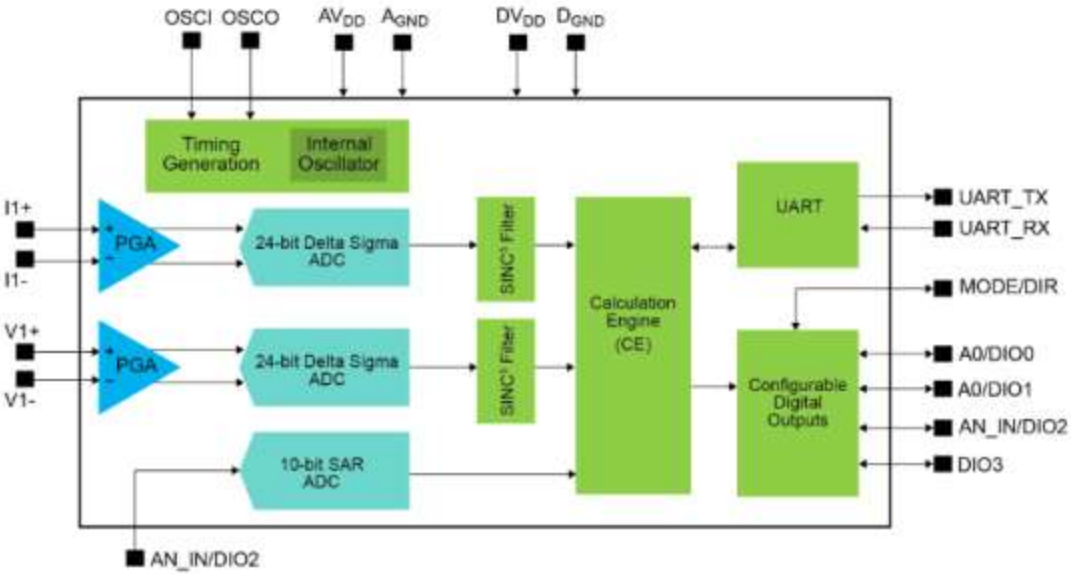

<< BACK

MCP39F511

Online Datasheet

Features:

- Power Monitoring Accuracy capable of 0.1% error across 4000:1 dynamic range
- Built-In Calculations:
  - Active, Reactive, Apparent Power
  - Active and Reactive Energy Accumulation
  - RMS Current, RMS Voltage
  - Line Frequency, Power Factor
- Dedicated Zero Crossing Detection (ZCD) Pin
- Dedicated PWM Output Pin
- Automatic Event Pin Control through Fast Voltage Surge Detection
- Fast Calibration Routines
- 2-wire UART: Baud Rate up to 115.2kbps
- 512 bytes User-accessible EEPROM
- Low-Drift Internal Voltage Reference: 10 ppm/°C typical
- 28-lead 5x5 QFN package
- Extended Temperature Range : -40°C to +125°C

Functional Block Diagram

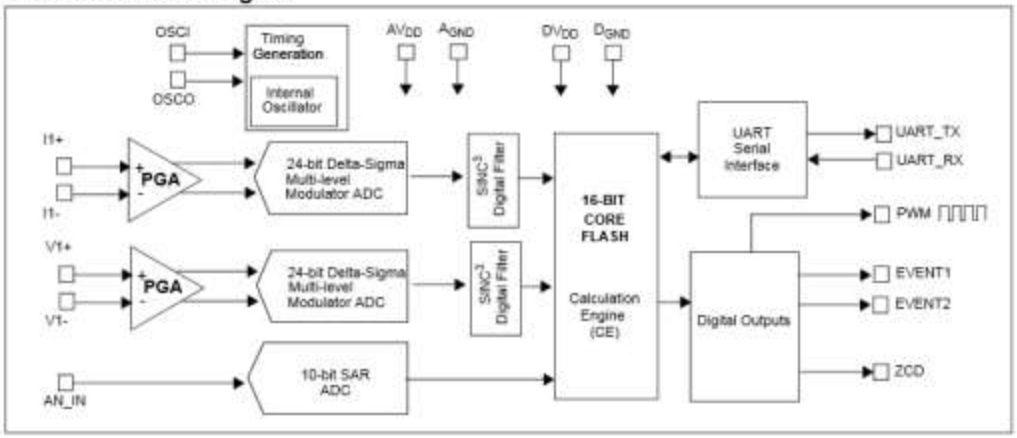

<< BACK

MCP39F511N

Online Datasheet

Features:

- Power Monitoring of Two Loads
- Capable of 0.5% error across 4000:1 dynamic range
- Built-In Calculations:
  - Active, Reactive, Apparent Power
  - Active and Reactive Energy Accumulation
  - True RMS Current, RMS Voltage
  - Line Frequency, Power Factor
- Dedicated Zero Crossing Detection (ZCD) Pin
- Dedicated PWM Output Pin
- Automatic Event Pin Control through Fast Voltage Surge Detection
- Fast Calibration Routines
- 2-wire UART: Baud Rate up to 115.2kbps
- 512 bytes User-accessible EEPROM
- Non-volatile On-chip Memory, no external memory required
- Low-Drift Internal Voltage Reference: 10 ppm/°C typical
- 28-lead 5x5 QFN package
- Extended Temperature Range: -40°C to +125°C

Functional Block Diagram

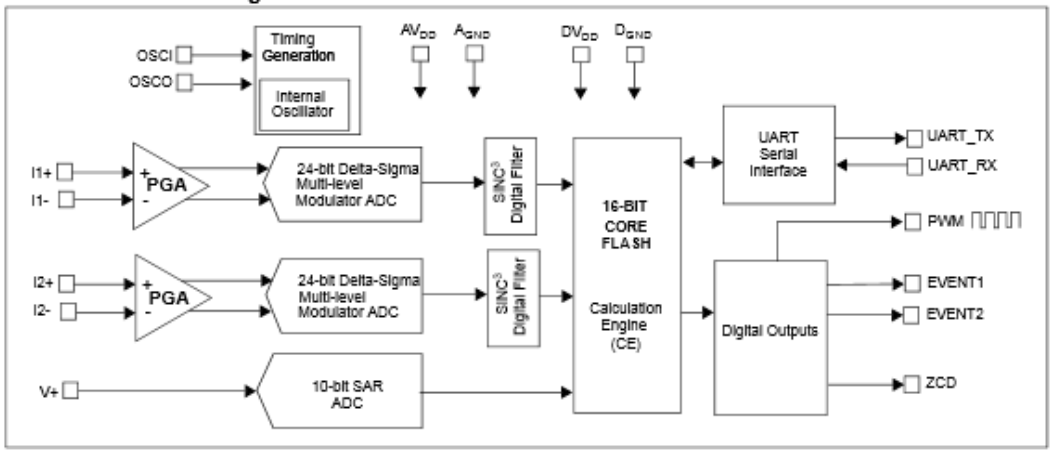

<< BACK

MCP39F521

Online Datasheet

Features:

- Power Monitoring Accuracy capable of 0.1% error across 4000:1 dynamic range
- Built-In Calculations:
  - Active, Reactive, Apparent Power
  - Active and Reactive Energy Accumulation
  - RMS Current, RMS Voltage
  - Line Frequency, Power Factor
- Dedicated Zero Crossing Detection (ZCD) Pin
- Automatic Event Pin Control through Fast Voltage Surge Detection
- Fast Calibration Routines
- I^2C Interface
- 512 bytes User-accessible EEPROM through page read/write commands
- Non-volatile On-chip Memory, no external memory required
- Low-Drift Internal Voltage Reference: 10 ppm/°C typical
- 28-lead 5x5 QFN package
- Extended Temperature Range : -40°C to +125°C

Functional Block Diagram

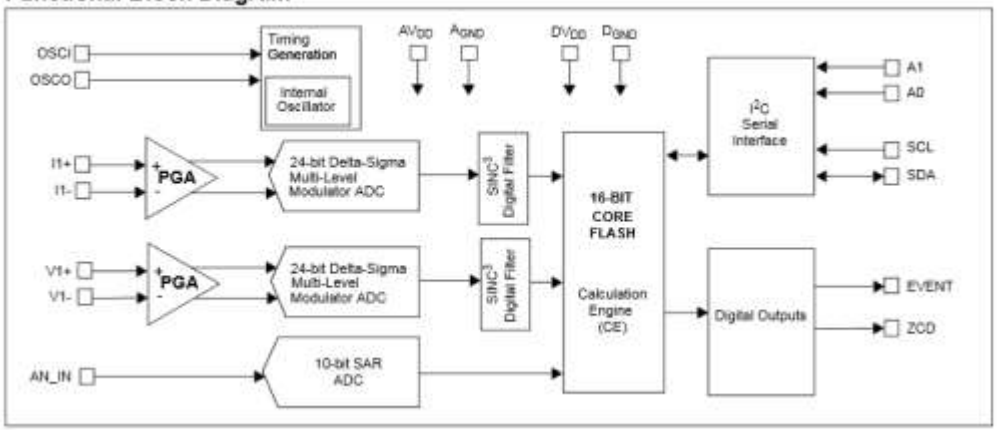

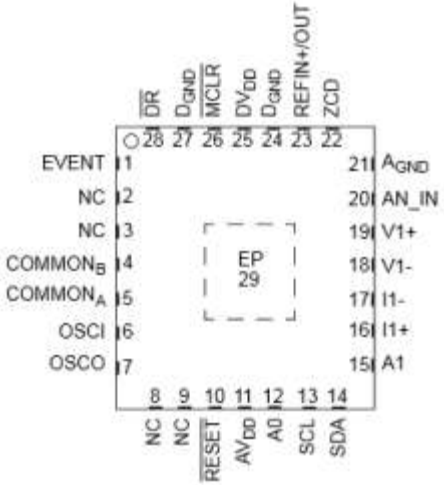

<< BACK

ATM90E26

Online Datasheet

Features:

- Fully compliant with IEC standard IEC62052-11, IEC62053-21 and IEC62053-23
- Class 1 or class 2 single-phase watt-hour meter or class 2 single-phase var-hour meter
- Accuracy of 0.1% for active energy and 0.2% for reactive energy for a 5000:1 dynamic range
- Voltage Reference: 15ppm/°C (typical)
- Electrical parameters measurement: less than ±0.5% fiducial error for Vrms, Irms, mean active/reactive/apparent power, frequency, power factor and phase angle
- SPI or UART interface
- Dedicated ADC and different gains for L line and N line current sampling circuits
- L line and/or N line metering modes
    - Anti-tampering mode (larger power)
    - L line mode (fixed L line)
    - L+N mode (applicable for single-phase three-wire system)
    - Flexible mode
- Package: 28-lead SSOP

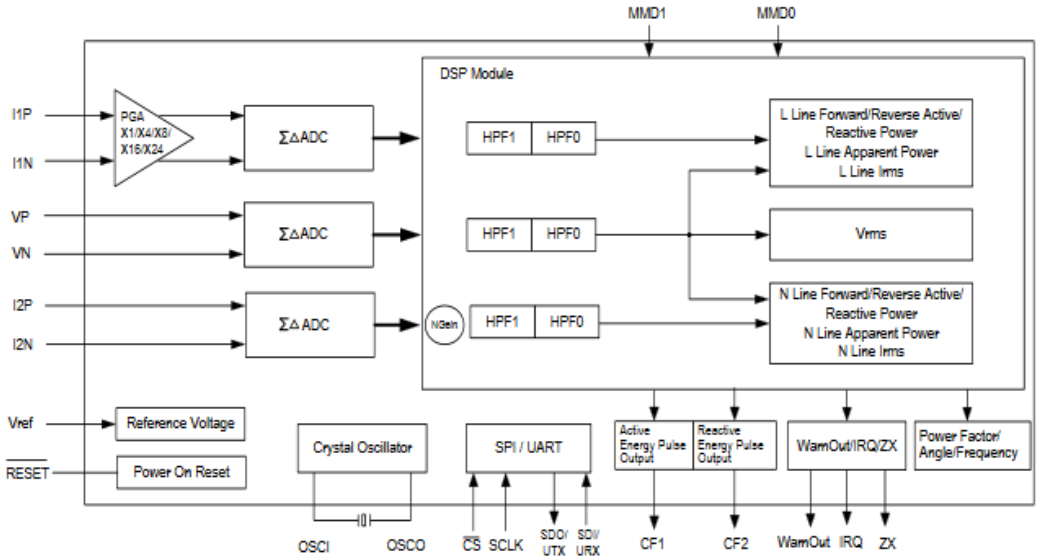

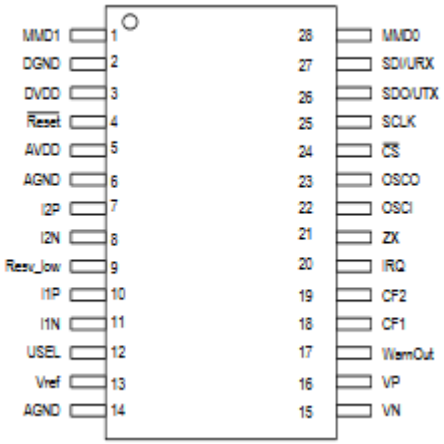

<< BACK

ATM90E32AS

Online Datasheet

Features:

- Compliant with IEC62052-11, IEC62053-22 and IEC62053-23, ANSI C12.1 and ANSI C12.20
- Class 0.5S or class 1 poly-phase watt-hour meter or class 2 poly-phase var-hour meter
- Accuracy of ±0.1% for active energy & ±0.2% for reactive energy for 6000:1dynamic range
- 6 dedicated ADCs
- Voltage Reference: 6 ppm/°C (typ)
- ±1°C (typical) temperature sensor accuracy
- Electrical parameters measurement: less than ±0.5% fiducial error for Vrms, Irms, mean active/reactive/apparent power, frequency, power factor and phase angle
- Event detection: sag, over voltage, phase loss, over current, reverse V/I phase sequence, reverse flow, calculated neutral line current INC over-current and frequency upper and lower threshold
- SPI interface
- Package: TQFP-48

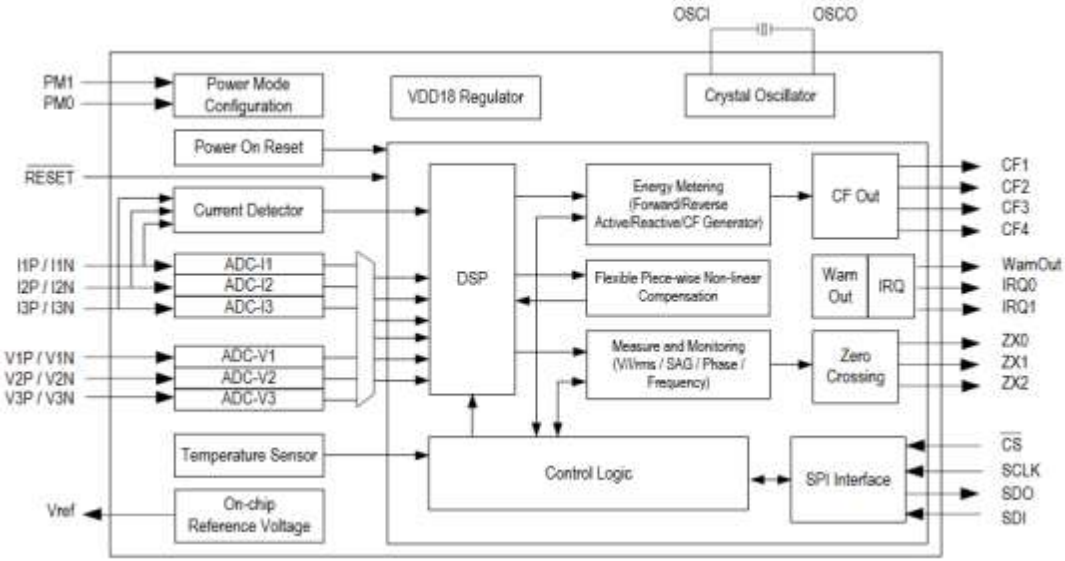

<< BACK

ATM90E36A

Online Datasheet

Features:

- Compliant with IEC62052-11, IEC62053-22 and IEC62053-23, ANSI C12.1 and ANSI C12.20
- Class 0.5S or class 1 poly-phase watt-hour meter or class 2 poly-phase var-hour meter
- Accuracy of ±0.1% for active energy & ±0.2% for reactive energy for 6000:1 dynamic range
- 7 dedicated ADCs
- Voltage Reference: 6 ppm/°C (typ)
- ±1°C (typ) temperature sensor accuracy
- Electrical parameters measurement: less than ±0.5% fiducial error for Vrms, Irms, mean active/reactive/apparent power, frequency, power factor and phase angle
- Fundamental (0.2%) and harmonic (1%) active energy
- Total Harmonic Distortion (THD) and Discrete Fourier Transform (DFT) functions for 2~32 order harmonic component analysis for each phase's voltage and current.THD and DFT results available in SPI accessible registers
- SPI interface with DMA
- Package: TQFP-48

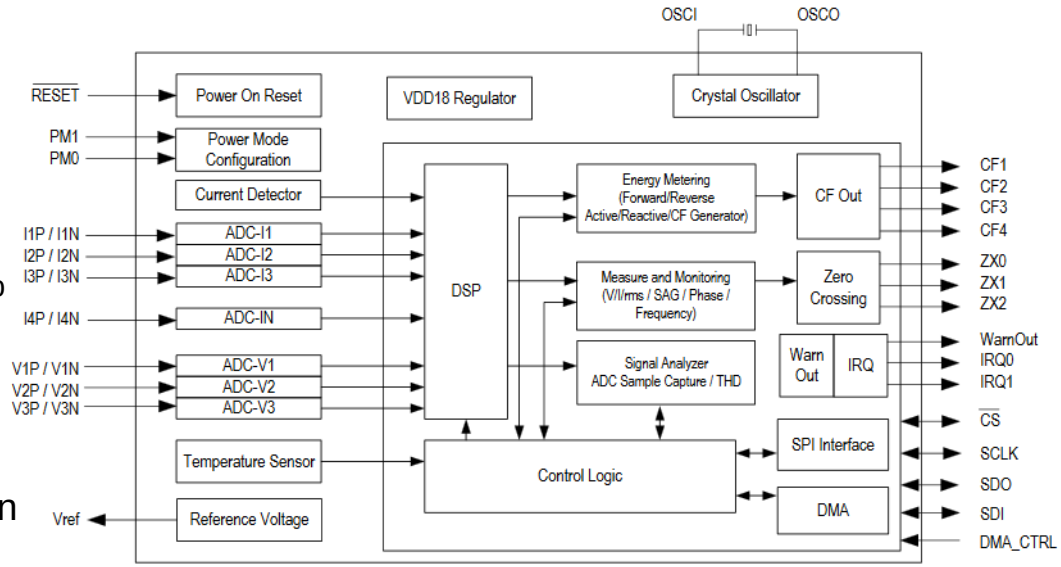

<< BACK

MCP3901/03

2 & 6-Ch AFEs

Online Datasheet

Features:

- MCP3901: 2-Ch AFE
- MCP3903: 6-Ch AFE
- Synchronous sampling 16/24-bit ΔΣ ADCs
  - Up to 91 dB SINAD, -104 dBc THD, 109 dB SFDR for each channel
- Programmable data rate up to 64 ksps
- Ultra low power shutdown mode with <2 µA
- Up to -133 dB Crosstalk between the two channels
- Low Drift Internal Voltage Reference
- Differential Voltage Reference Input Pins
- High Gain PGA on each channel (up to 32 V/V)
- Phase Delay Compensation: 1 µs time resolution
- Separate Modulator outputs for each channel
- High-Speed Addressable SPI Interface
- Independent analog and digital power supplies 4.5V - 5.5V AV_{DD}, 2.7V - 5.5V DV_{DD}
- MCP3901 in 20-lead SSOP
- MCP3903 in 28-lead SSOP
- Extended Temperature Range: -40°C to +125°C

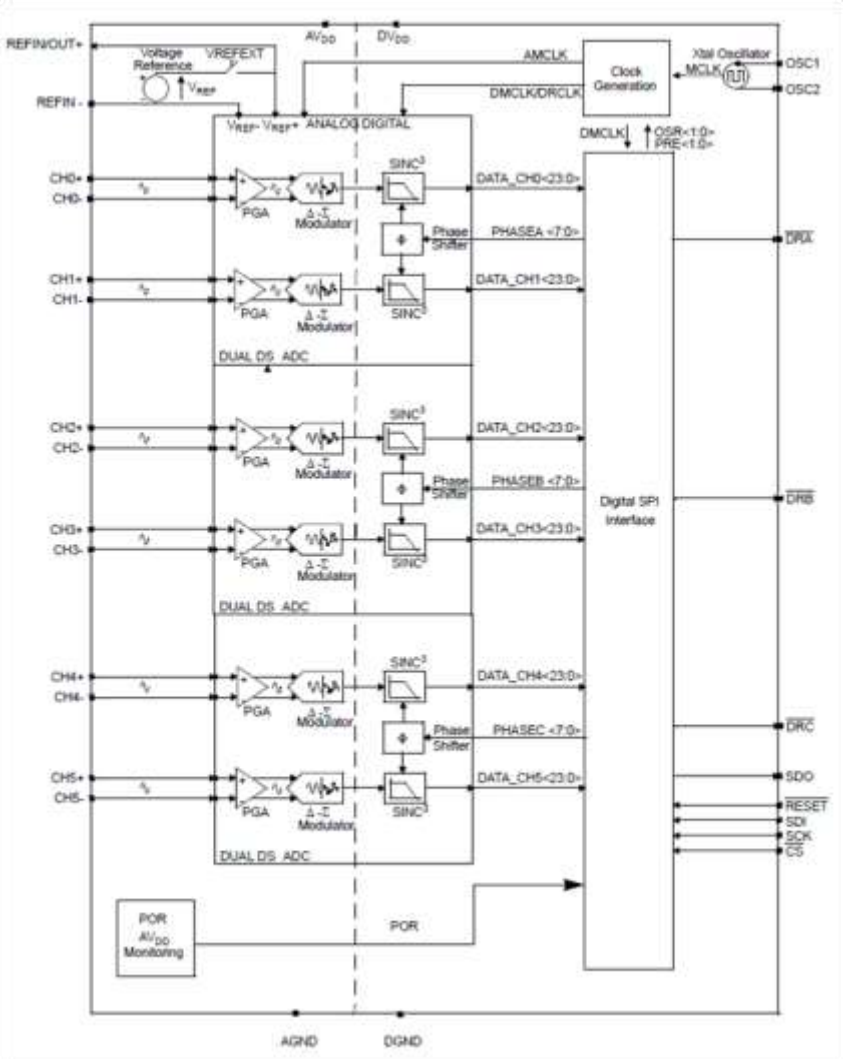

<< BACK

MCP3911

2-Ch AFE

Online Datasheet

Features

- 2.7V - 3.6V AVDD, DVDD
- Two Synchronous Sampling 16/24-bit ΔΣ ADCs
- 94.5 dB SINAD, -106.5 dB THD (up to 35th harmonic), 111 dB SFDR
- Programmable Data Rate up to 125 ksps
- Oversampling Ratio up to 4096
- -122 dB Crosstalk between the Two Channels
- Low Drift 1.2V Internal Voltage Reference: 7 ppm/°C
- Differential Voltage Reference Input Pins
- PGA on Each Channel (up to 32V/V)
- Phase Delay Compensation: 1 µs Time Resolution
- Separate Modulator Outputs for Each Channel
- Separate Data Ready Pin for Easy Synchronization
- Individual 24-bit Digital Offset and Gain Error Correction for Each Channel
- High-Speed 20 MHz SPI Interface
- Continuous Read/Write Modes
- Low Power Consumption down to 5.6 mW at 3.3V
- Extended Temperature Range: -40°C to +125°C
- 20-lead QFN and SSOP Packages
- Pin-to-pin Compatible with MCP3901

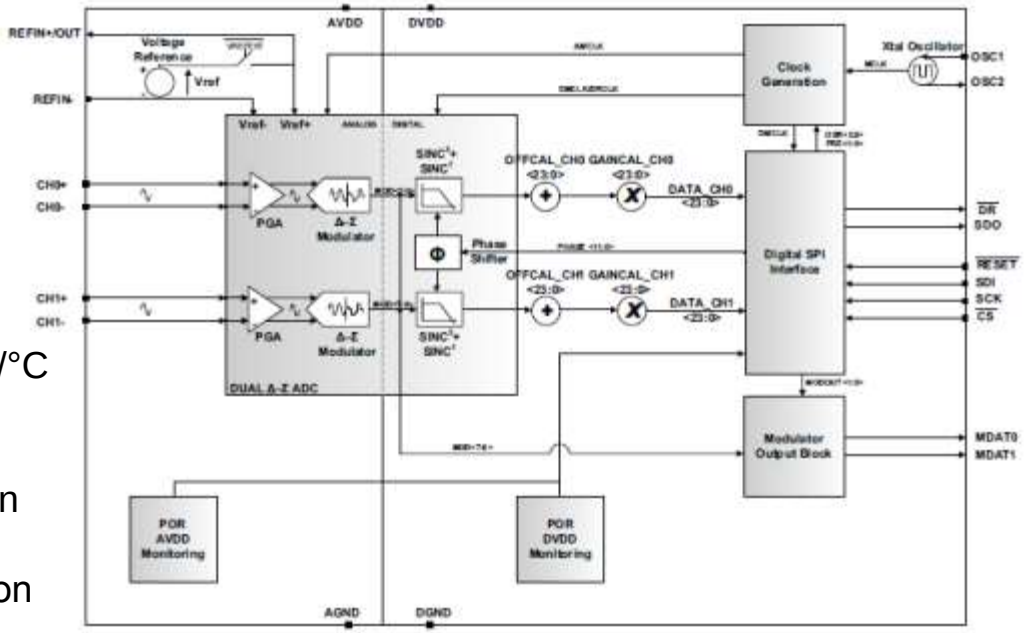

<< BACK

MCP3918

1-Ch AFE

Online Datasheet

Features

- Single 24-bit ΔΣ ADC
- 93.5 dB SINAD, -107 dBc Total Harmonic Distortion (THD) (up to 35th Harmonic), 112 dBFS SFDR
- 2-Wire Interface mode ideal for Polyphase Shunt Energy Meters
- Advanced Security Features:
    - 16-bit CRC checksum
    - Register map lock with 8-bit secure key
- Programmable Data Rate, up to 125 ksps
- Oversampling Ratio up to 4096
- Internal Voltage Reference: 9 ppm/°C drift
- PGA (up to 32 V/V)
- Phase Delay Compensation: 1 µs Time Resolution
- Separate Data Ready Pin for Easy Synchronization
- 24-bit Digital Offset and Gain Error Correction
- High-Speed 20 MHz SPI interface
- Continuous Read/Write Modes for Minimum Communication Time
- Extended Temperature Range: -40°C to +125°C
    - All specifications are valid down to - 45°C
- 20-lead SSOP and QFN Packages

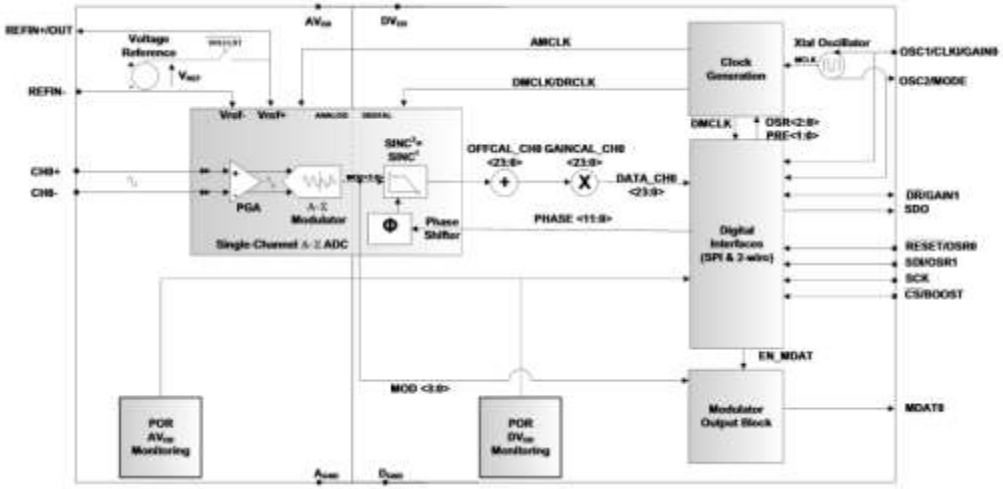

<< BACK

MCP3910

2-Ch AFE with 2-Wire Mode

Online Datasheet

Features

- Two 24-bit ΔΣ ADC
- 93.5 dB SINAD, -107 dBc Total Harmonic Distortion (THD) (up to 35th Harmonic), 112 dBFS SFDR
- Enables 0.1% Typical Active Power Measurement Error over a 10,000:1 Dynamic Range
- 2-Wire Interface mode ideal for Polyphase Shunt Energy Meters
- Advanced Security Features:
  - 16-bit CRC checksum
  - Register map lock with 8-bit secure key
- Programmable Data Rate, up to 125 ksps
- Oversampling Ratio up to 4096
- -122 dB Crosstalk between Channels
- Low Drift Internal Voltage Reference: 9 ppm/°C
- PGA on Each Channel (up to 32 V/V)
- Phase Delay Compensation: 1 µs Time Resolution
- Separate Data Ready Pin for Easy Synchronization
- 24-bit Digital Offset and Gain Error Correction
- High-Speed 20 MHz SPI interface
- Extended Temperature Range: -40°C to +125°C
  - All specifications are valid down to - 45°C
- 20-lead SSOP and QFN Packages

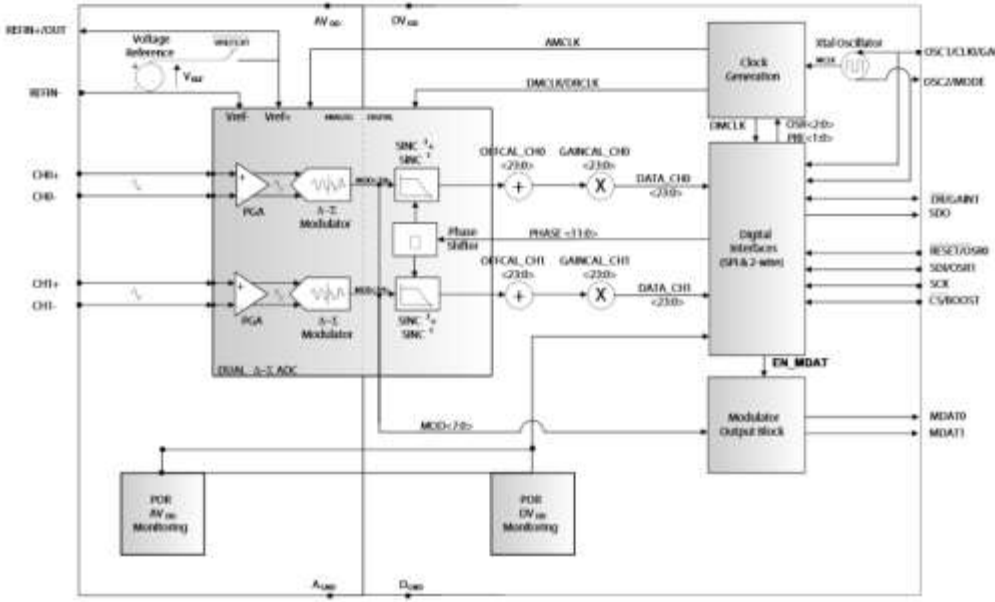

<< BACK

MCP3919

3-Ch AFE

Online Datasheet

Features

- Three Synchronous Sampling 24-bit ΔΣ ADCs
- 93.5 dB SINAD, -107 dBc Total Harmonic Distortion (THD) (up to 35th Harmonic), 112 dBFS SFDR
- Enables 0.1% Typical Active Power Measurement Error over a 10,000:1 Dynamic Range
- Advanced Security Features:
    - 16-bit CRC checksum
    - Register map lock with 8-bit secure key
- Programmable Data Rate up to 125 ksps
- Oversampling Ratio up to 4096
- -122 dB Crosstalk between Channels
- Low Drift Internal Voltage Reference: 9 ppm/°C
- PGA on Each Channel (up to 32 V/V)
- Phase Delay Compensation: 1 µs Time Resolution
- Separate Data Ready Pin for Easy Synchronization
- Individual 24-bit Digital Offset and Gain Error Correction for Each Channel
- High-Speed 20 MHz SPI interface with 2-Wire Interface Mode
- Continuous Read/Write Modes for Minimum Communication Time
- Extended Temperature Range: -40°C to +125°C
- 28-lead QFN and SSOP Packages

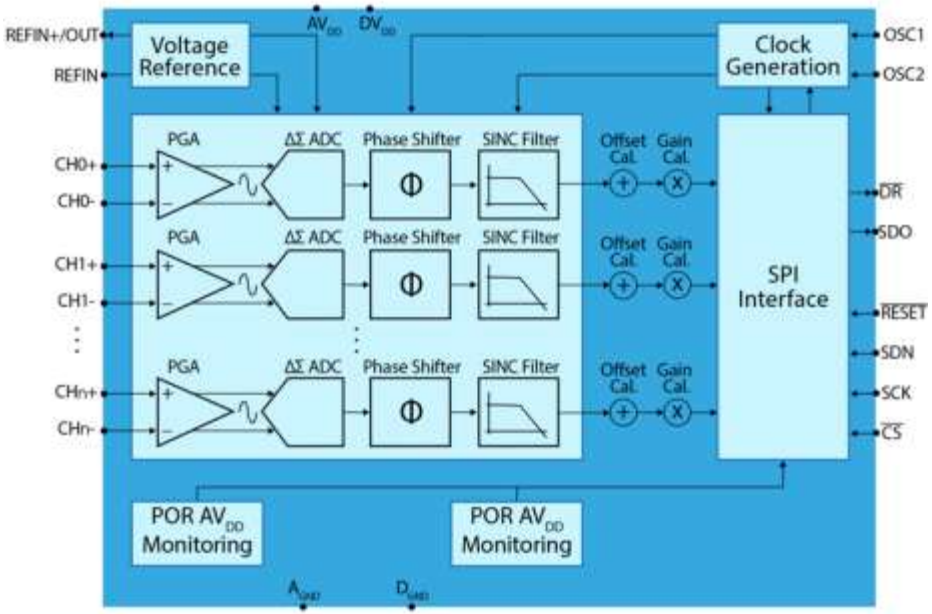

<< BACK

MCP3912

4-Ch AFE

Online Datasheet

Features

- Four Synchronous Sampling 24-bit ΔΣ ADCs
- 93.5 dB SINAD, -107 dBc Total Harmonic Distortion (THD) (up to 35th Harmonic), 112 dBFS SFDR
- Enables 0.1% Typical Active Power Measurement Error over a 10,000:1 Dynamic Range
- Advanced Security Features:
    - 16-bit CRC checksum
    - Register map lock with 8-bit secure key
- Programmable Data Rate up to 125 ksps
- Oversampling Ratio up to 4096
- -122 dB Crosstalk between Channels
- Low Drift Internal Voltage Reference: 9 ppm/°C
- PGA on Each Channel (up to 32 V/V)
- Phase Delay Compensation: 1 µs Time Resolution
- Separate Data Ready Pin for Easy Synchronization
- Individual 24-bit Digital Offset and Gain Error Correction for Each Channel
- High-Speed 20 MHz SPI interface
- Continuous Read/Write Modes for Minimum Communication Time
- Extended Temperature Range: -40°C to +125°C
- 28-lead QFN and SSOP Packages

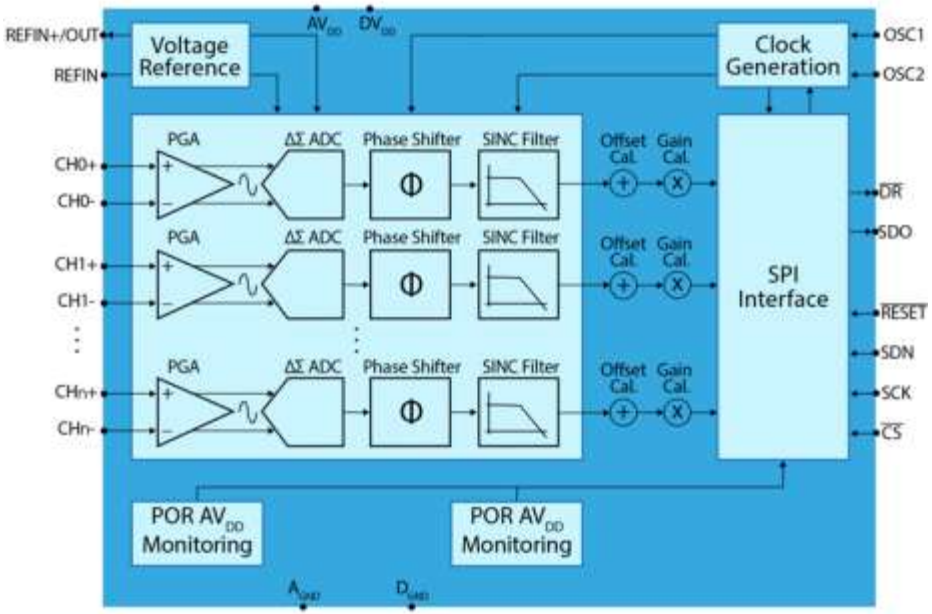

<< BACK

MCP3913

6-Ch AFE

Online Datasheet

Features

- Six Synchronous Sampling 24-bit ΔΣ ADCs
- 94.5 dB SINAD, -107 dBc Total Harmonic Distortion (THD) (up to 35th Harmonic), 112 dBFS SFDR
- Enables 0.1% Typical Active Power Measurement Error over a 10,000:1 Dynamic Range
- Advanced Security Features:
    - 16-bit CRC checksum
    - Register map lock with 8-bit secure key
- Programmable Data Rate up to 125 ksps
- Oversampling Ratio up to 4096
- -122 dB Crosstalk between Channels
- Low Drift Internal Voltage Reference: 9 ppm/°C
- PGA on Each Channel (up to 32 V/V)
- Phase Delay Compensation: 1 µs Time Resolution
- Separate Data Ready Pin for Easy Synchronization
- Individual 24-bit Digital Offset and Gain Error Correction for Each Channel
- High-Speed 20 MHz SPI interface
- Continuous Read/Write Modes for Minimum Communication Time
- Extended Temperature Range: -40°C to +125°C
- 28-lead SSOP and 40-lead µQFN Package

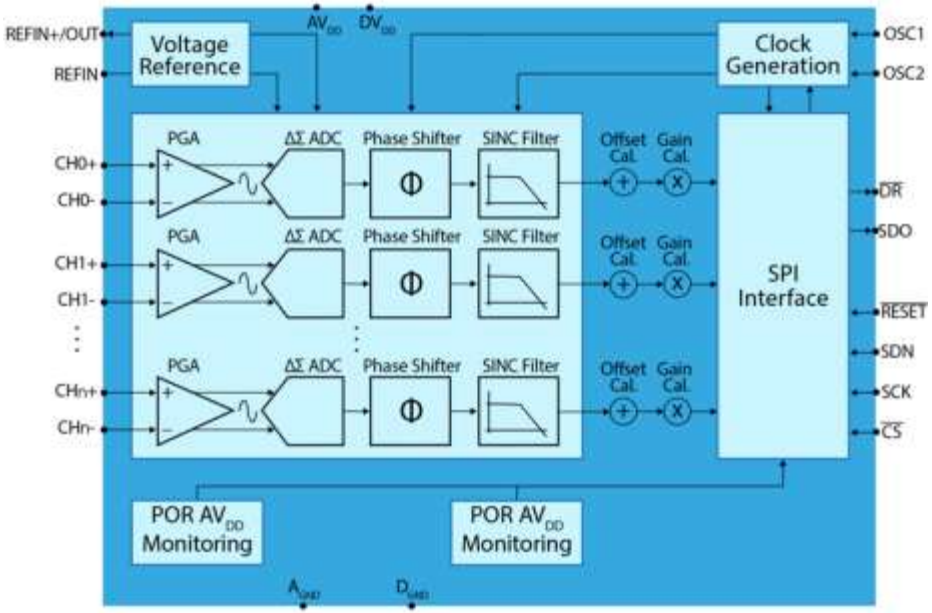

<< BACK

MCP3914

8-Ch AFE

Online Datasheet

Features

- Eight Synchronous Sampling 24-bit ΔΣ ADCs
- 94.5 dB SINAD, -107 dBc Total Harmonic Distortion (THD) (up to 35th Harmonic), 112 dBFS SFDR
- Enables 0.1% Typical Active Power Measurement Error over a 10,000:1 Dynamic Range
- Advanced Security Features:
    - 16-bit CRC checksum
    - Register map lock with 8-bit secure key
- Programmable Data Rate up to 125 ksps
- Oversampling Ratio up to 4096
- -122 dB Crosstalk between Channels
- Low Drift Internal Voltage Reference: 9 ppm/°C
- PGA on Each Channel (up to 32 V/V)
- Phase Delay Compensation: 1 µs Time Resolution
- Separate Data Ready Pin for Easy Synchronization
- Individual 24-bit Digital Offset and Gain Error Correction for Each Channel
- High-Speed 20 MHz SPI interface
- Extended Temperature Range: -40°C to +125°C
- 28-lead SSOP and 40-lead µQFN Package

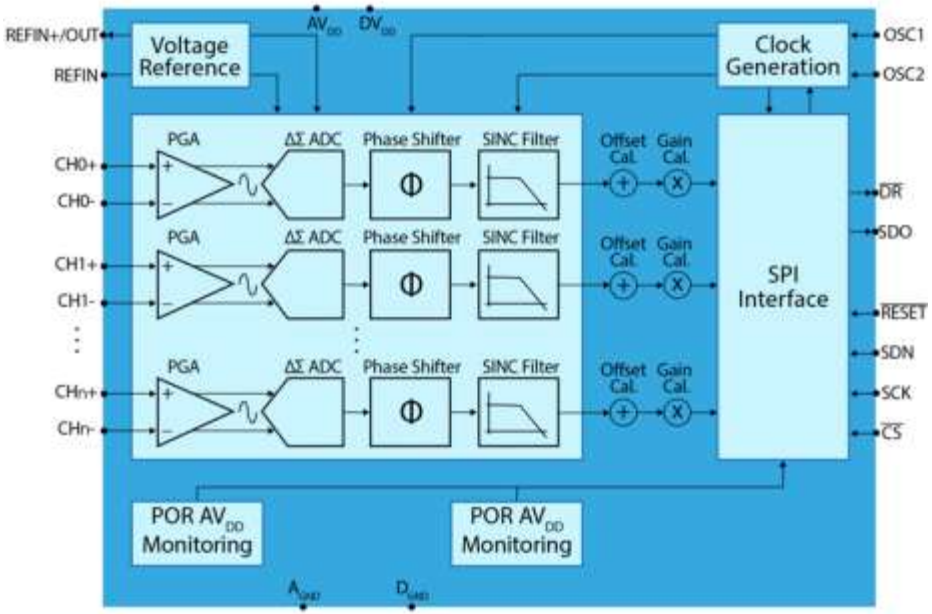

<< BACK

ATSENSE101

3/4/7-Ch AFE

Online Datasheet

Features

- 3-Ch Single-phase ATSENSE101
- 4-Ch Dual-phase ATSENSE201(H)
- 7-Ch Poly-phase ATSENSE301(H)
- 84 dB SINAD
- Suitable for Atmel MCUs and Metrology Library
- Compliant with Class 0.2 Standards (ANSI C12.20-2002 and IEC 62053-22)
- Current Channels with Pre-Gain (x1, x2, x4, x8)
- Integrated SINC Decimation Filters
- Output Data Rate: 16 kSps typical
- 3.0V to 3.6V Operation
- Ultra Low Power: < 2.5 mW typical/Channel @ 3.3V
- Industrial Temperature Range: -40°C to +85°C
- Precision Voltage Reference
    - Temperature Drift: 50 ppm/°C (typ.) or 10 ppm (typ.) for (ATSENSE-201H/ATSENSE-301H)
- 8 MHz Serial Peripheral Interface (SPI)
- Packages:
    - ATSENSE-101: 20-lead SOIC
    - ATSENSE-201/301(H): 32-lead 7x7 TQFP

ATSENSE-301(H) Functional Block Diagram

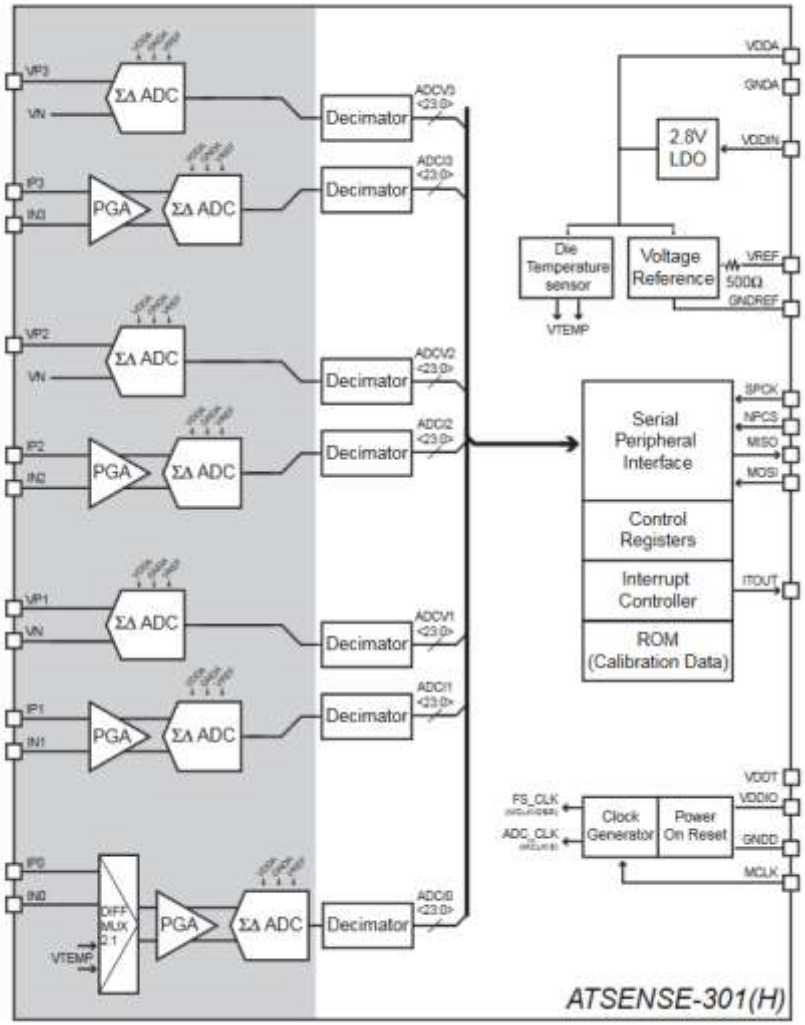

<< BACK

MCP4021/2/3/4

Online Datasheet

Features:

- Nonvolatile Digital Potentiometer in SOT-23, MSOP and SOIC Packages
- 64 Taps: 63 Resistors with Taps to V_{SS} and V_{DD}
- Simple Up/Down (U/D) Protocol
- Automatic Recall of Potentiometer Wiper Settings
- Resistance Values: 2 kΩ, 5 kΩ, 10 kΩ, 50 kΩ
- Low Tempco:
  Absolute (Rheostat): <100ppm (typ.)
  Ratiometric (Potentiometer): <10ppm (typ.)
- Low Wiper Resistance: 75Ω (typ.)
- WiperLock™ Technology to Secure the EEPROM
- Low-Power Operation: 1µA (max.) Static Current
- Wide Operating Voltage: 2.7V to 5.5V
- Extended Temperature Range: -40°C to +125°C

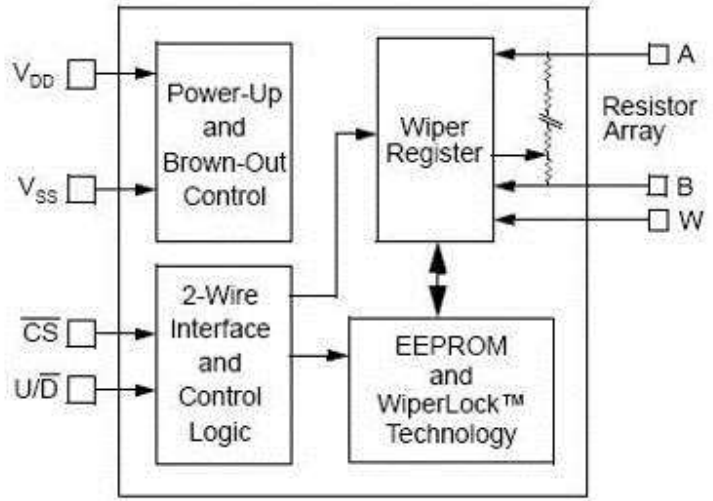

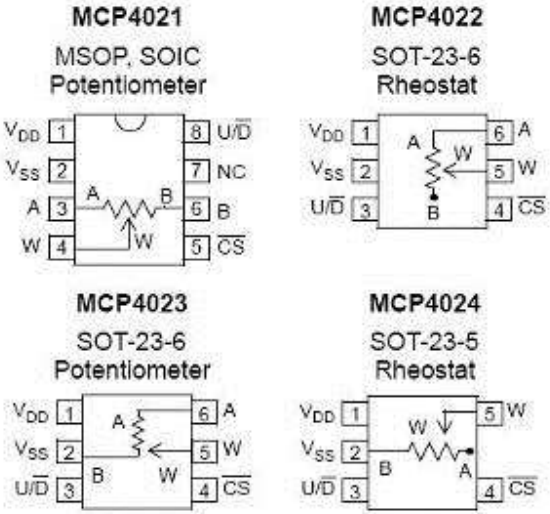

<< BACK

MCP4011/2/3/4

Online Datasheet

Features:

- Volatile Digital Potentiometer in SOT-23, MSOP and SOIC Packages
- 64 Taps: 63 Resistors with Taps to V_{SS} and V_{DD}
- Simple Up/Down (U/D) Protocol
- Automatic Recall of Potentiometer Wiper Settings
- Resistance Values: 2.1 kΩ, 5 kΩ, 10 kΩ, 50 kΩ
- Low Tempco:
  Absolute (Rheostat): 50ppm (typ.)
  Ratiometric (Potentiometer): 10ppm (typ.)
- Low Wiper Resistance: 75Ω (typ.)
- High-Voltage Tolerant Digital Inputs: up to 12V
- Low-Power Operation: 1µA (max.) Static Current
- Wide Operating Voltage: 2.7V to 5.5V
- Extended Temperature Range: -40°C to +125°C

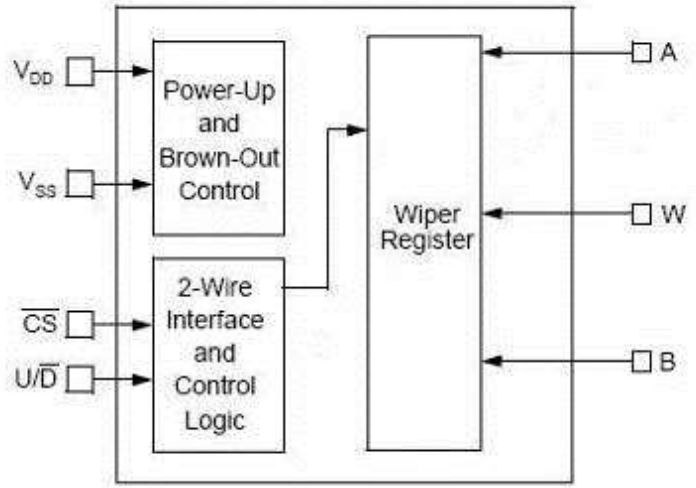

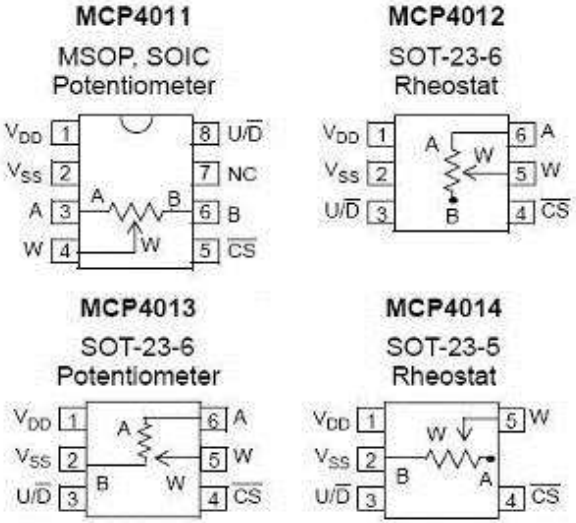

<< BACK

MCP4017/8/9

Online Datasheet

Features:

- Potentiometer or Rheostat configuration options
- 7-bit: Resistor Network Resolution
  - 127 Resistors (128 Steps)
- Zero Scale to Full Scale Wiper operation
- RAB Resistances: 5kΩ, 10kΩ, 50kΩ, or 100kΩ
- Low Wiper Resistance: 100Ω (typ.)
- Low Tempco:
  - Absolute (Rheostat): 50ppm (typ.) (0°C to 70°C)
  - Ratiometric (Potentiometer): 10ppm (typ.)
- Simple I²C™ Protocol with read & write commands
- Brown-out reset protection: 1.5V (typ.)
- Power-on Default Wiper Setting (mid-scale)
- Low-Power Operation:
  - 2.5µA Static Current (typ.)
- Wide Operating Voltage Range:
  - 2.7V to 5.5V - Device Characteristics Specified
  - 1.8V to 5.5V - Device Operation
- Wide Bandwidth (-3dB) Operation:
  - 2MHz (typ.) for 5.0kΩ device
- Extended temperature range (-40°C to +125°C)
- Very small package (SC70)

Device Block Diagram

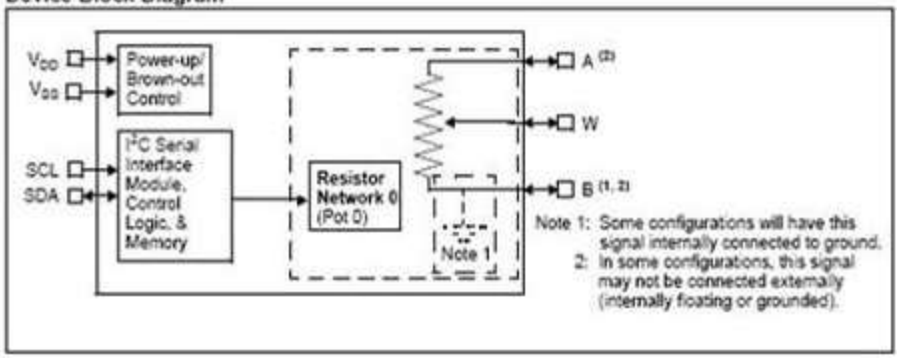

Potentiometer

MCP4018

SC70-6

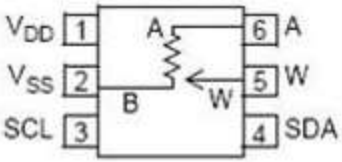

Rheostat

MCP4017

SC70-6

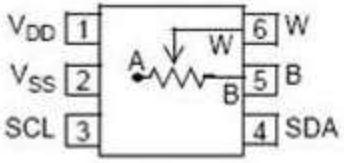

MCP4019

SC70-5

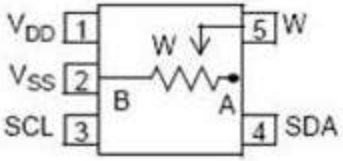

MCP40D17/8/9 >>

<< BACK

MCP40D17/8/9

Online Datasheet

Features:

- Potentiometer or Rheostat configuration options
- 7-bit: Resistor Network Resolution: 127 Resistors (128 Steps)
- Zero Scale to Full Scale Wiper operation
- RAB Resistances: 5kΩ, 10kΩ, 50kΩ, or 100kΩ
- Low Wiper Resistance: 100Ω (typ.)
- Low Tempco:
  - Absolute (Rheostat): 50ppm (typ.) 0°C to 70°C
  - Ratiometric (Potentiometer): 15ppm (typ.)
- I^2C™ Protocol
  - Supports SMBus 2.0 Write Byte/Word Protocol Formats
  - Supports SMBus 2.0 Read Byte/Word Protocol Formats
- Standard I^2C Device Addresses:
  - All devices offered with address “0101110”
  - MCP40D18 also offered with address “0111110”
- Brown-out reset protection: 1.5V (typ.)
- Power-on Default Wiper Setting (mid-scale)
- Low-Power Operation:
  - 2.5µA Static Current (typ.)
- Wide Operating Voltage Range:
  - 2.7V to 5.5V - Device Characteristics Specified
  - 1.8V to 5.5V - Device Operation
- Wide Bandwidth (-3dB) Operation:
  - 2 MHz (typ.) for 5.0kΩ device
- Extended temperature range (-40°C to +125°C)
- Very small package (SC70)
- Lead free (Pb-free) package

Package Types

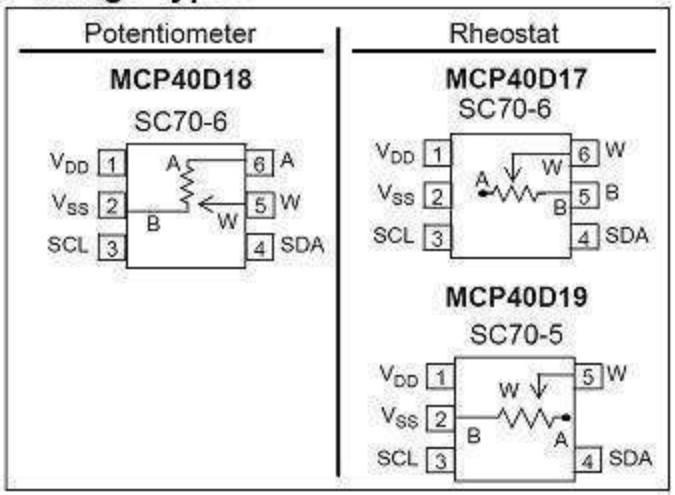

Device Block Diagram

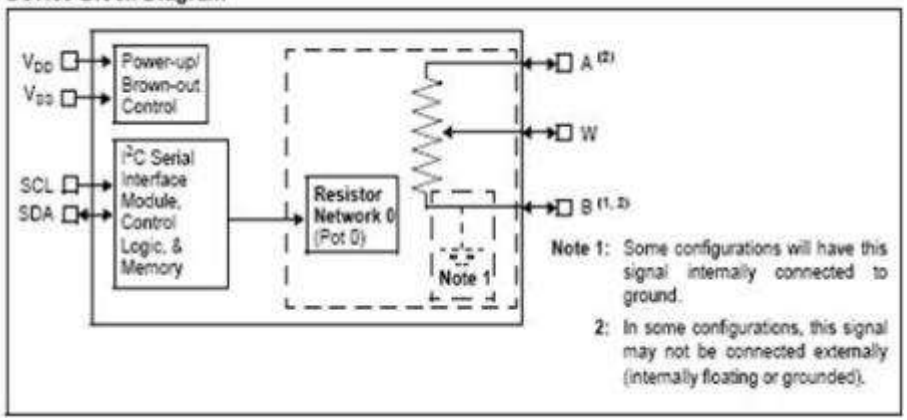

<< MCP4017/8/9

<< BACK

MCP413x/415x/423x/425x

Online Datasheet

Features:

- Single or Dual Resistor Network options
- Potentiometer or Rheostat Configuration Options
- Resistor Network Resolution
  - 7-bit: 128 Resistors (129 Steps)
  - 8-bit: 256 Resistors (257 Steps)
- R_{AB} Resistances options of:
  - 5kΩ, 10kΩ, 50kΩ, 100kΩ
- Low Tempco:
  - Absolute (Rheostat): 50ppm (typ.) 0°C to 70°C
  - Ratiometric (Potentiometer): 15ppm (typ.)
- SPI Serial Interface (10MHz, modes 0,0 & 1,1)
  - High-Speed Read/Writes to wiper registers
  - SDI/SDO multiplexing (MCP41X1 only)
- High-Voltage Tolerant Digital Inputs: up to 12.5V
- Supports Split Rail Applications
- Wide Operating Voltage:
  - 2.7V to 5.5V - Device Characteristics Specified
  - 1.8V to 5.5V - Device Operation
- Wide Bandwidth (-3dB) Operation:
  - 2MHz (typ.) for 5.0kΩ device
- Extended temperature range: -40°C to +125°C

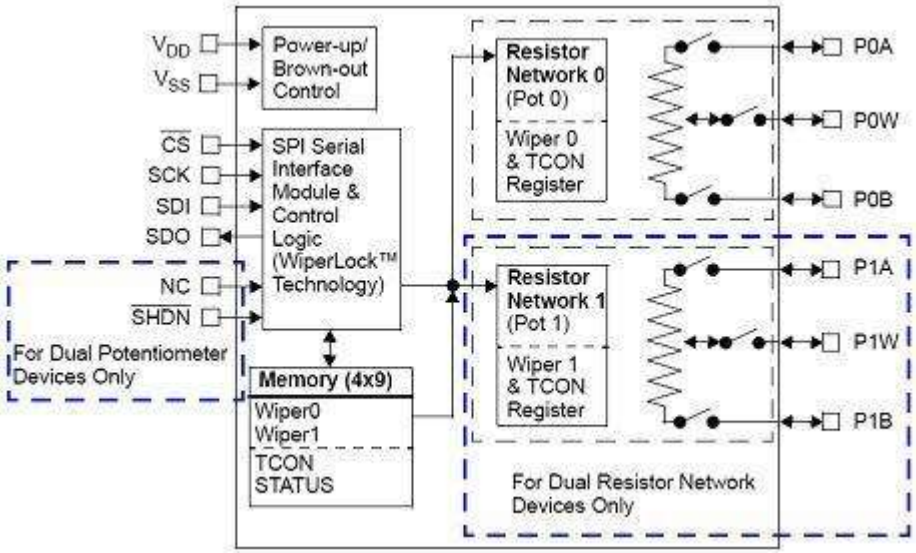

<< BACK

MCP414x/416x/424x/426x

Online Datasheet

Features:

- Single or Dual Resistor Network options
- Potentiometer or Rheostat configuration options
- Resistor Network Resolution
  - 7-bit: 128 Resistors (129 Steps)
  - 8-bit: 256 Resistors (257 Steps)
- R_{AB} Resistances options: 5kΩ, 10kΩ, 50kΩ, 100kΩ
- Low Tempco:
  - Absolute (Rheostat): 50ppm (typ.) 0°C to 70°C
  - Ratiometric (Potentiometer): 15ppm (typ.)
- SPI serial interface (10MHz, modes 0,0 & 1,1)
  - High-Speed Read/Writes to wiper registers
  - Read/Write to Data EEPROM registers
  - Serially enabled EEPROM write protect
  - SDI/SDO multiplexing (MCP41X1 only)
- Write Protect Feature:
  - Hardware Write Protect (WP) Control pin
  - Software Write Protect (WP) Configuration bit
- Supports Split Rail Applications
- Wide Operating Voltage:
  - 2.7V to 5.5V - Device Characteristics Specified
  - 1.8V to 5.5V - Device Operation
- Wide Bandwidth (-3dB) Operation: 2MHz (typ.) 5.0kΩ
- Extended temperature range (-40°C to +125°C)

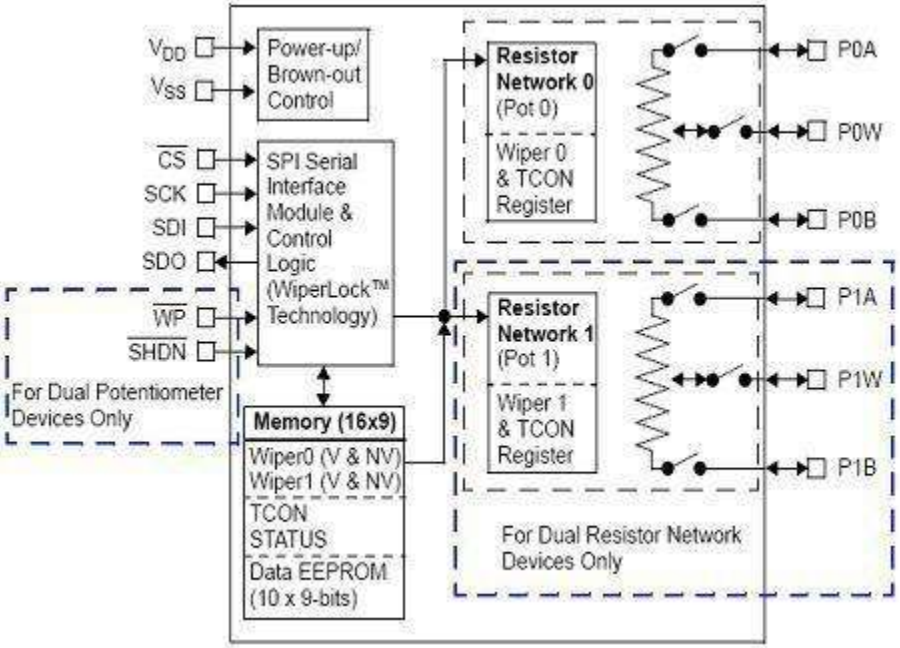

MCP41xxx/42xxx >>

<< BACK

MCP454x/456x/464x/466x

Online Datasheet

Features:

- Single or Dual Resistor Network options
- Potentiometer or Rheostat configuration options
- Resistor Network Resolution
  - 7-bit: 128 Resistors (129 Steps)
  - 8-bit: 256 Resistors (257 Steps)
- R_{AB} Resistances options of: 5kΩ, 10kΩ, 50kΩ, 100kΩ
- Zero-Scale to Full-Scale Wiper operation
- Low Wiper Resistance: 75Ω (typ.)
- Low Tempco:
  - Absolute (Rheostat): 50ppm (typ.) 0°C to 70°C
  - Ratiometric (Potentiometer): 15ppm (typ.)
- Non-volatile Memory
  - Automatic Recall of Saved Wiper Setting
  - WiperLock™ Technology
  - 10 General Purpose Memory Locations
- I²C™ Serial interface: 100kHz, 400kHz and 3.4MHz support
- Serial protocol allows:
  High-Speed Read/Write to wiper, Read/Write to EEPROM, Write Protect to be enabled/disabled, WiperLock to be enabled/disabled
- Resistor Network Terminal Disconnect Feature via the Terminal Control (TCON) Register
- Write Protect Feature:
- Brown-out reset protection: 1.5V (typ.)
- Serial Interface Inactive current: 2.5µA (typ.)
- High-Voltage Tolerant Digital Inputs: up to 12.5V
- Wide Operating Voltage:
  - 2.7V to 5.5V - Device Characteristics Specified
  - 1.8V to 5.5V - Device Operation
- Wide Bandwidth (-3dB) Operation: 2MHz (typ.) for 5.0kΩ device
- Extended temperature range: -40°C to +125°C

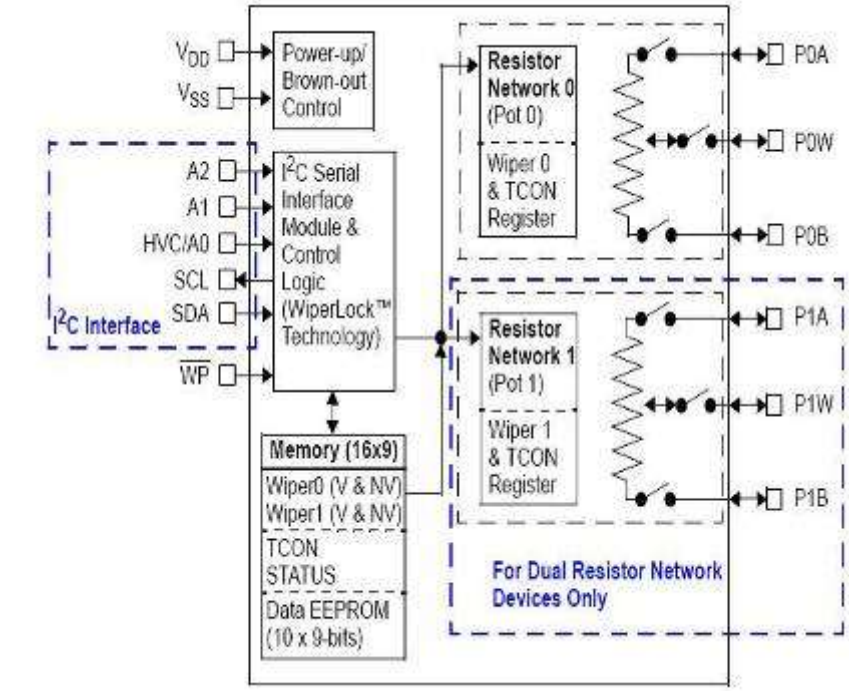

<< BACK

MCP453x/455x/463x/465x

Online Datasheet

Features:

- Single or Dual Resistor Network options
- Potentiometer or Rheostat configuration options
- Resistor Network Resolution
  7-bit: 128 Resistors (129 Steps)
  8-bit: 256 Resistors (257 Steps)
- RAB Resistances options of: 5kΩ, 10kΩ, 50kΩ, 100kΩ
- Zero-Scale to Full-Scale Wiper operation
- Low Wiper Resistance: 75Ω (typ.)
- Low Tempco:
  Absolute (Rheostat): 50ppm (typ.) 0°C to 70°C
  Ratiometric (Potentiometer): 15ppm (typ.)
- I^2C™ Serial interface
  100kHz, 400kHz and 3.4MHz support
- Serial protocol allows:
  - High-Speed Read/Write to wiper
  - Increment/Decrement of wiper
- Resistor Network Terminal Disconnect Feature via the Terminal Control (TCON) Register
- Brown-out reset protection: 1.5V (typ.)
- Serial Interface Inactive current: 2.5µA (typ.)
- High-Voltage Tolerant Digital Inputs: up to 12.5V
- Wide Operating Voltage:
  2.7V to 5.5V - Device Characteristics Specified
  1.8V to 5.5V - Device Operation
- Wide Bandwidth (-3dB) Operation:
  2MHz (typ.) for 5.0kΩ device
- Extended temperature range: -40°C to +125°C

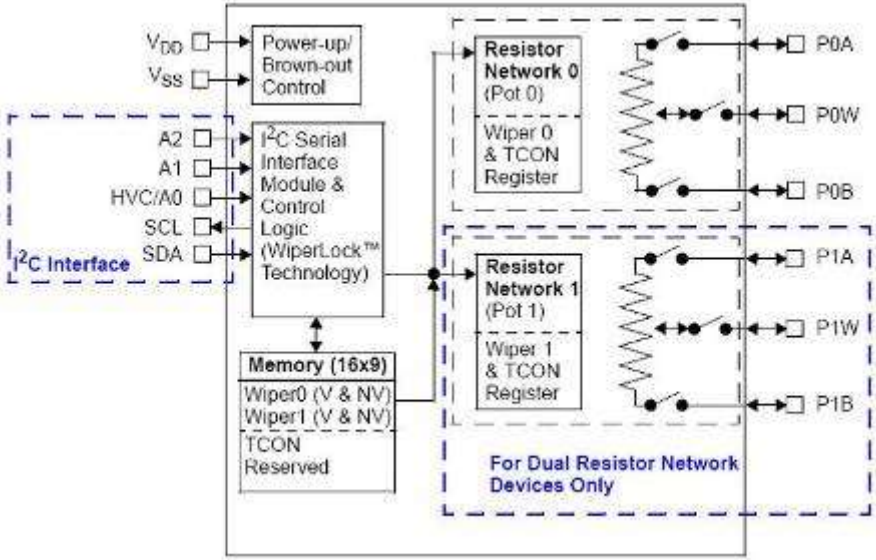

<< BACK

MCP433x/434x/435x/436x

Online Datasheet

Features:

- Quad Resistor Network
- Volatile and nonvolatile memory options available
- Potentiometer or Rheostat Configuration Options
- Resistor Network Resolution:
  - 7-bit: 128 Resistors (129 Taps)
  - 8-bit: 256 Resistors (257 Taps)
- RAB Resistances Options of: 5kΩ, 10kΩ, 50kΩ, 100kΩ
- Zero Scale to Full Scale Wiper Operation
- Low Wiper Resistance: 75 Ω (typical)
- Low Tempco:
  - Absolute (Rheostat): 50 ppm typical (0°C to 70°C)
  - Ratiometric (Potentiometer): 15 ppm typical
- SPI Serial Interface (10 MHz, Modes 0,0 and 1,1):
  - High-Speed Read/Writes to wiper registers
- Resistor Network Terminal Disconnect Feature via Terminal Control (TCON) Register
- Reset Input Pin
- Brown-out Reset Protection (1.5V typical)
- Serial Interface Inactive Current (2.5 µA typical)
- High-Voltage Tolerant Digital Inputs: Up to 12.5V
- Supports Split Rail Applications
- Internal Weak Pull-up on all Digital Inputs
- Wide Operating Voltage: - 2.7V to 5.5V
  - Device Characteristics Specified - 1.8V to 5.5V
- Wide Bandwidth (-3 dB) Operation: 2 MHz (typ.) for 5.0 kΩ device
- Extended Temperature Range (-40°C to +125°C)

Device Block Diagram

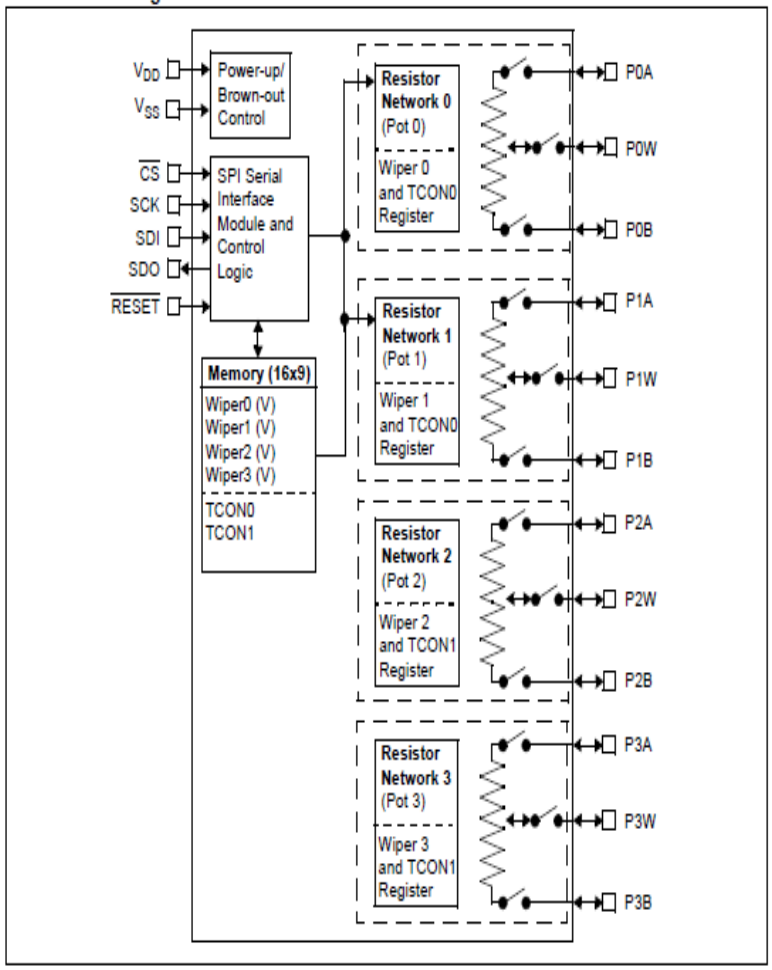

<< BACK

MCP443x/444x/445x/446x

Online Datasheet

Features:

- Quad Resistor Network
- Potentiometer or Rheostat Configuration Options
- Resistor Network Resolution:
  7-bit – 128 Resistors (129 Taps)
  8-bit – 256 Resistors (257 Taps)
- Four RAB Resistances options: 5kohm, 10kohm, 50kohm, 100kohm
- Zero-scale to Full-scale Wiper Operation
- Low Wiper Resistance – 75 □ typical
- I^2C Serial Interface Support: 100kHz, 400kHz, 3.4MHz
- Brown-out Reset Protection – 1.5V typical
- Serial Interface Inactive Current – 2.5 uA typical
- High-Voltage Tolerant Digital Inputs Up to 12.5V
- Internal Weak Pull-up on All Digital Inputs, except SCL and SDA
- Wide Operating Voltage:
  - 2.7V to 5.5V - Device Characteristics Specified
  - 1.8V to 5.5V - Device Operation
- Wide Bandwidth (-3 dB) Operation: 2 MHz typical (5.0 kohm Device)
- Extended Temperature Range (-40°C to +125°C)
- Three Package Options: 4x4 QFN-20 TSSOP-20 TSSOP-14

Device Block Diagram

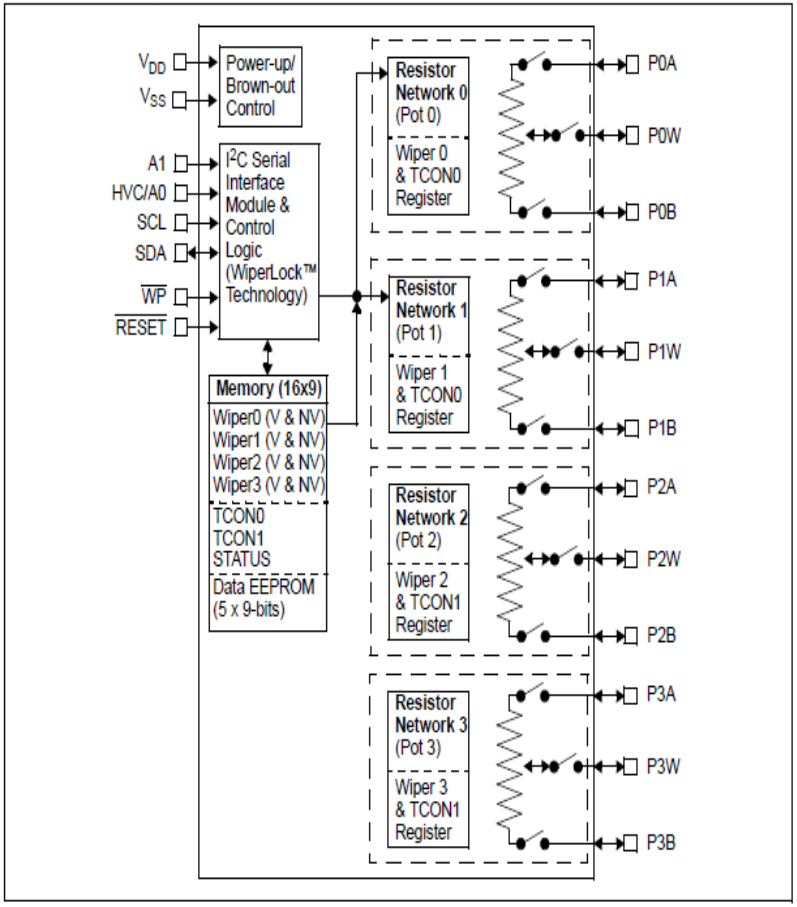

<< BACK

MCP41HV31/51

Online Datasheet

Features:

- High-Voltage Analog Support:
  - +36V Terminal Voltage Range (DGND = V-)
  - ±18V Terminal Voltage Range (DGND = V- + 18V)
- Wide Operating Voltage:
  - Analog: 10V to 36V (specified performance)
  - Digital: 2.7V to 5.5V
    1.8V to 5.5V (DGND □ V- + 0.9V)
- Single Resistor Network
- Potentiometer Configuration Options
- Resistor Network Resolution
  - 7-bit: 127 Resistors (128 Taps) MCP41HV31
  - 8-bit: 255 Resistors (256 Taps) MCP41HV51
- RAB Resistance Options:
  - 5 kΩ,10 kΩ, 50 kΩ,100 kΩ
- High Terminal/Wiper Current (IW) Support:
- Zero-Scale to Full-Scale Wiper Operation
- Low Wiper Resistance: 75 Ω (Typical)
- Low Tempco:
  - Absolute (Rheostat): 50 ppm Typical (0°C to +70°C)
  - Ratiometric (Potentiometer): 15 ppm Typical
- SPI Serial Interface
- Resistor Network Terminal Disconnect Via:
  - Shutdown Pin (SHDN) or Terminal Control (TCON) Register
- Write Latch (WLAT) Pin
- Power-On Reset / Brown-Out Reset
- Extended Temperature Range (-40°C to +125°C)
- Package Types: TSSOP-14 and QFN-20 (5x5)

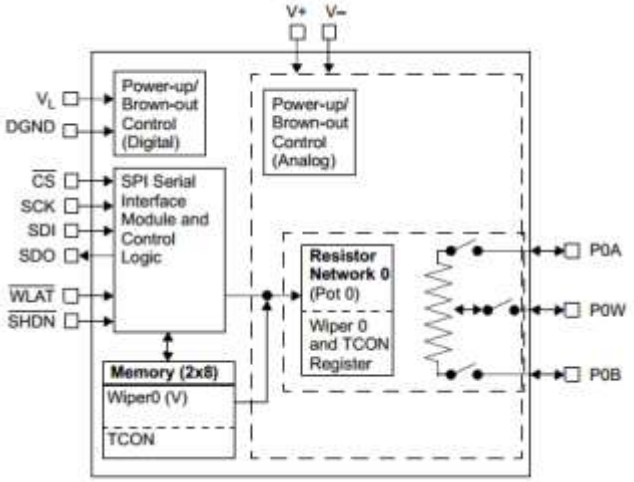

<< BACK

MCP45HV31/51

Online Datasheet

Features:

- High-Voltage Analog Support:
  - +36V Terminal Voltage Range (DGND = V-)
  - ±18V Terminal Voltage Range (DGND = V- + 18V)
- Wide Operating Voltage:
  - Analog: 10V to 36V (specified performance)
  - Digital: 2.7V to 5.5V
    1.8V to 5.5V (DGND □ V- + 0.9V)
- Single Resistor Network
- Resistor Network Resolution
  - 7-bit: 127 Resistors (128 Taps) MCP45HV31
  - 8-bit: 255 Resistors (256 Taps) MCP45HV51
- RAB Resistance Options:
  - 5 kΩ,10 kΩ, 50 kΩ,100 kΩ
- High Terminal/Wiper Current (IW) Support:
- Zero-Scale to Full-Scale Wiper Operation
- Low Wiper Resistance: 75 Ω (Typical)
- Low Tempco:
  - Absolute (Rheostat): 50 ppm Typical (0°C to +70°C)
  - Ratiometric (Potentiometer): 15 ppm Typical
- I2C Serial Interface
- Resistor Network Terminal Disconnect Via:
  - Shutdown Pin (SHDN) or Terminal Control (TCON) Register
- Write Latch (WLAT) Pin
- Power-On Reset / Brown-Out Reset
- Extended Temperature Range (-40°C to +125°C)
- Package Types: TSSOP-14 and QFN-20 (5x5)

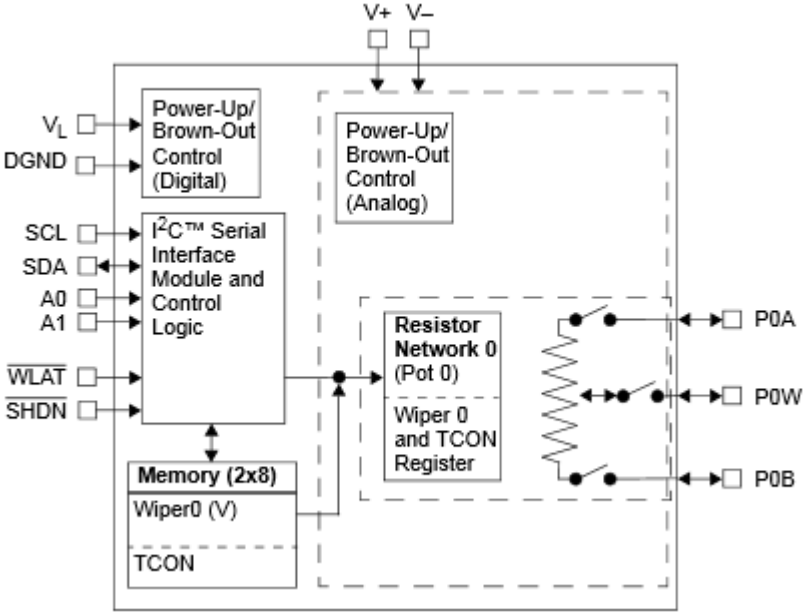

<< BACK

MCP47A1

Online Datasheet

Features:

- 6-bit DAC
  - 65 Taps: 64 Resistors with Taps to Full-Scale and Zero-Scale
- VREF Pull-down Resistance: 20 kOhms (typical)
- VOUT Voltage Range: VSS to VREF
- SMBus/ I^2C Compatible Interface
- Brown-out Reset Protection (1.5V typical)
- Power-on Default Wiper Setting (Mid-scale)
- Low-Power Operation: 90 µA Static Current (typ.)
- Wide Operating Voltage Range: - 1.8V to 5.5V
- Low Tempco: 15 ppm (typ.)
- 100 kHz (typical) Bandwidth (-3 dB) Operation
- Extended Temperature Range: -40°C to +125°C
- 6-lead SC70

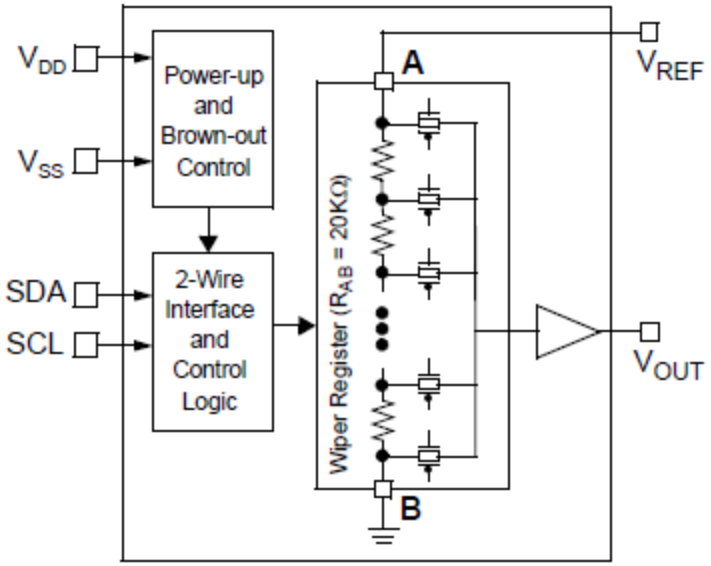

<< BACK

MCP47DA1

Online Datasheet

Features:

- 6-bit DAC
  - 65 Taps: 64 Resistors with Taps to Full-Scale and Zero-Scale (Wiper Code 00h to 40h)
  - 7-bit Serial Data (00h to 7Fh, 00h - 20h = Zero- Scale and 60h - 7Fh = Full-Scale)
- VREF Pull-down Resistance: 30 k□ (typ.)
- VOUT Voltage Range
  - 1/3 * VREF to 2/3 * VREF
- SMBus/ I^2C Compatible Interface
- Brown-out Reset Protection (1.5V typ.)
- Power-on Default Wiper Setting (Mid-scale)
- Low-Power Operation: 90 µA Static Current (typ.)
- Wide Operating Voltage Range:
  - 2.7V to 5.5V - Device Characteristics Specified
  - 1.8V to 2.7V - Device Operation
- Low Tempco: 15 ppm (typ.)
- 100 kHz (typical) Bandwidth (-3 dB) Operation
- Extended Temperature Range (-40°C to +125°C)
- 6-lead SOT-23, SC70

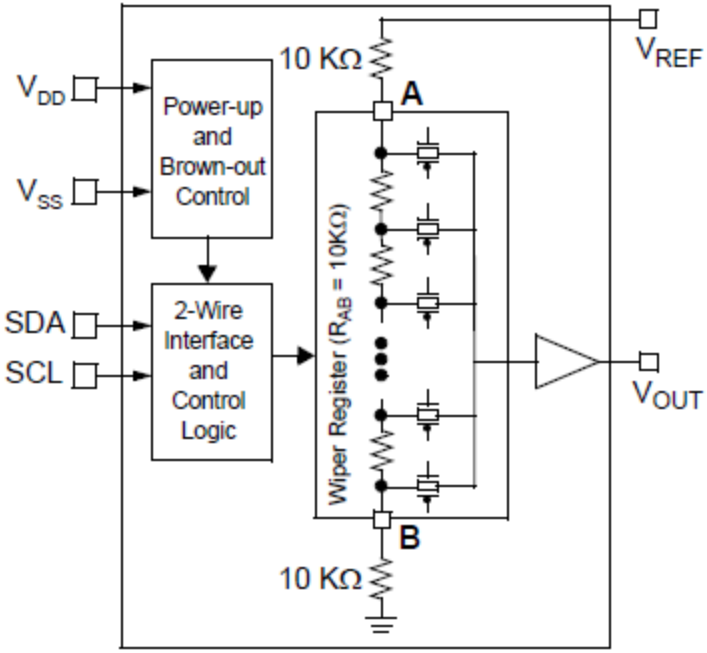

<< BACK

MCP4725

Online Datasheet

Features:

- 12-bit Resolution
- On-Board Non-Volatile Memory (EEPROM)
- ±0.2 LSB DNL (typ.)
- External A0 Address Pin
- Normal or Power-Down Mode
- Fast Settling Time of 6µs (typ.)
- External Voltage Reference (V_{DD})
- Rail-to-Rail Output
- Low Power Consumption
- Single-Supply Operation: 2.7V to 5.5V
- I^2C™ Interface:
  - Eight Available Addresses
  - Standard (100 kbps), Fast (400 kbps), and High-Speed (3.4 Mbps) Modes
- Extended Temperature Range: -40°C to +125°C
- 6-lead SOT-23 Package

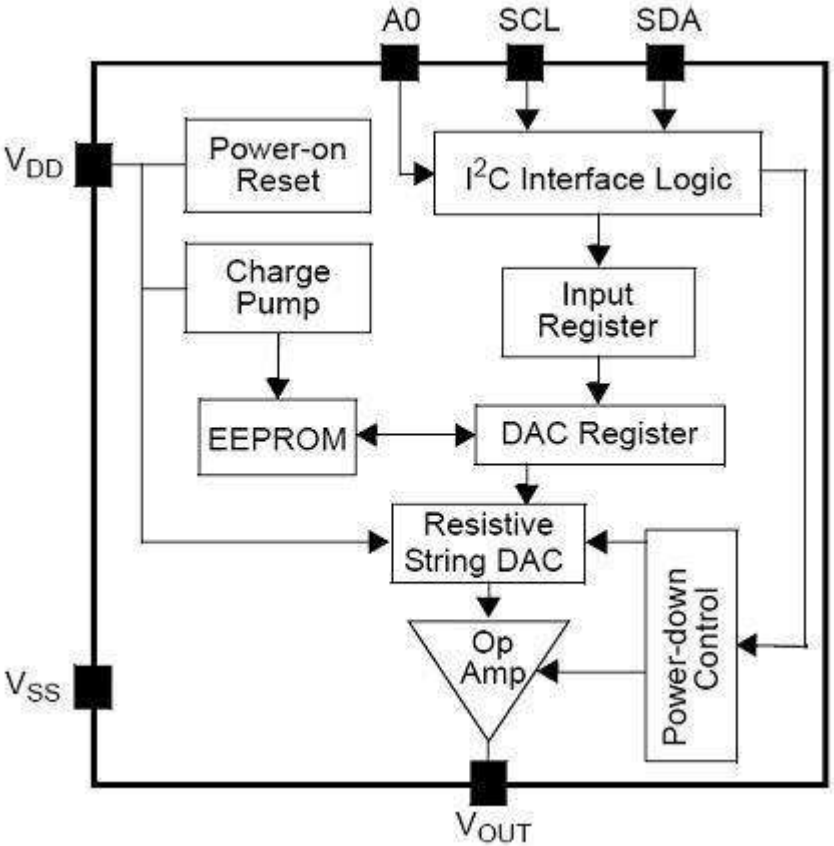

<< BACK

MCP4706/16/26

Online Datasheet

Features:

- Output Voltage Resolutions
  - 12-bit: MCP4726
  - 10-bit: MCP4716
  - 8-bit: MCP4706
- Fast Settling Time of 6µs (typ.)
- Rail-to-Rail Output
- DAC Voltage Reference Options
  - V_{DD} or V_{REF} Pin
- Output Gain Options: Unity (1x) or 2x
- Nonvolatile Memory (EEPROM)
  - Auto Recall of DAC register setting
  - Auto Recal of Device Configuration
- Low Power Consumption
  - Normal Operation: 210 µA (typ.)
  - Power Down: 60 nA (typ.)
- Power Down Modes
- Single-Supply Operation: 2.7V to 5.5V
- I²C™ Interface
- Small 6-lead SOT-23 and 2x2 DFN Packages
- Extended Temperature Range: -40°C to +125°C

MCP4706 / 16 / 26

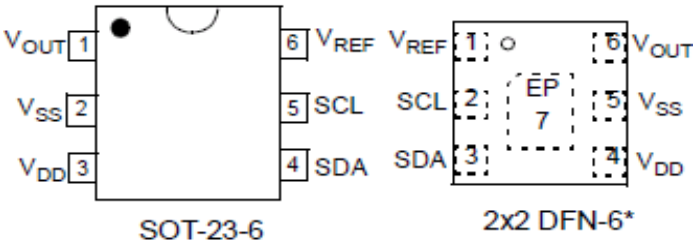

Block Diagram

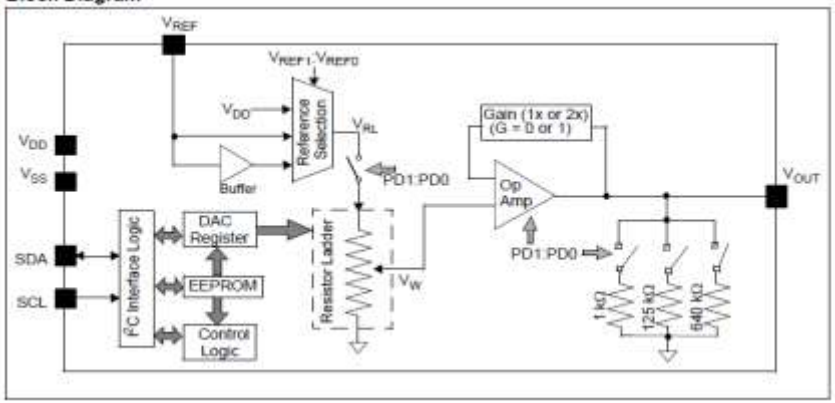

<< BACK

MCP4728

Online Datasheet

Features:

- 12-Bit Voltage Output DAC with 4 Buffered Outputs
- On-Board Non-Volatile Memory (EEPROM) for DAC Codes and I²C™ Address Bits
- Internal or External Voltage Reference Selection
- Output Voltage Range:
  - Using Internal V_{REF} (2.048V):
    0.000V to 2.048V with Gain Setting = 1
    0.000V to 4.096V with Gain Setting = 2
  - Using External V_{REF} (V_{DD}): 0.000V to V_{DD}
- ±0.2 LSB DNL (typ.)
- Fast Settling Time: 6µs (typ.)
- Normal or Power-Down Mode
- Low Power Consumption
- Single-Supply Operation: 2.7V to 5.5V
- I²C Interface:
  - Address bits: User Programmable to EEPROM
  - Standard (100 kbps), Fast (400 kbps) and High Speed (3.4 Mbps) Modes
- 10-Lead MSOP Package
- Extended Temperature Range: -40°C to +125°C

Functional Block Diagram

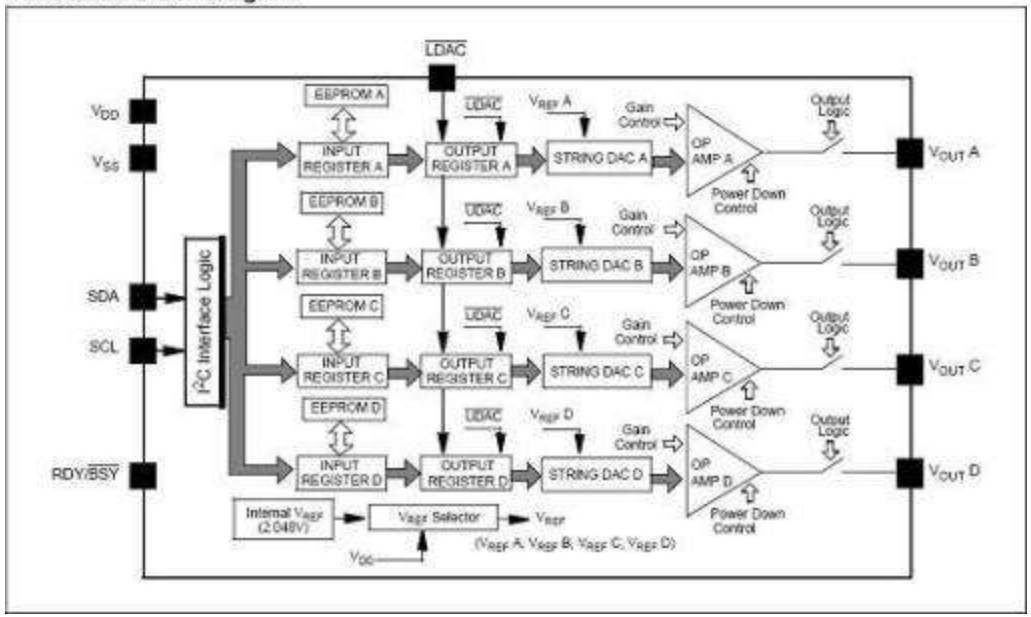

<< BACK

MCP47FEBXX

Online Datasheet

Features:

- Operating Voltage Range:
  - 2.7V to 5.5V - Full Specifications
  - 1.8V to 2.7V - Reduced Device Specifications
- Single/Dual Output Voltage Resolutions:
  - 8-bit: MCP47FEB01/2
  - 10-bit: MCP47FEB11/2
  - 12-bit: MCP47FEB21/2
- Rail-to-Rail Output
- Fast Settling Time of 6 µs (typical)
- DAC Voltage Reference Source Options:
  - Device VDD or External VREF pin
  - Internal Band Gap (1.22V typical)
- Output Gain Options: Unity (1x) or 2x
- Nonvolatile Memory (EEPROM):
  - User-programmed Power-on Reset (POR)/Brown-out Reset (BOR)
  - Auto Recall of DAC register setting
  - Auto Recall of Device Configuration
- I2C™ Interface
- 8-lead TSSOP

MCP47FEBX1 Device Block Diagram (Single-Channel Output)

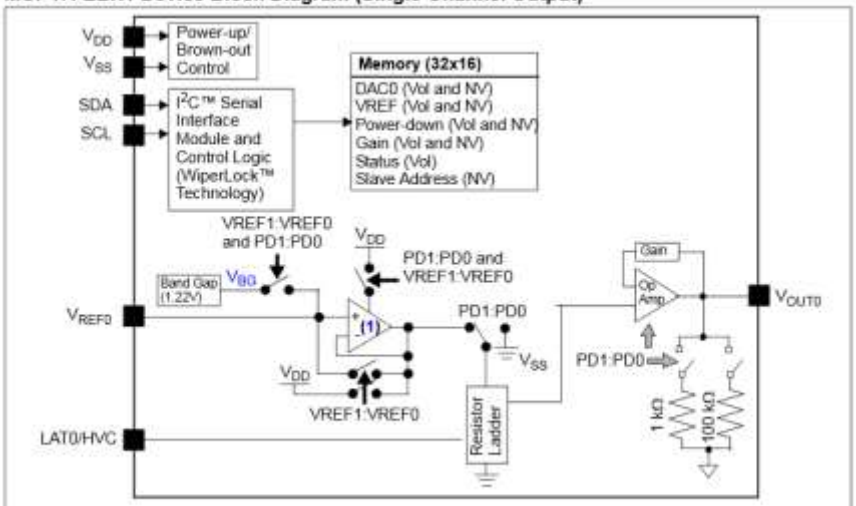

Note 1: If Internal Band Gap is selected, this buffer has a 2x gain. If the G bit = '1', this is a total gain of 4.

Package Types

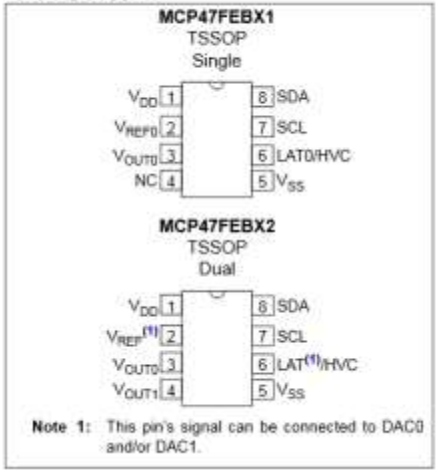

Note 1: This pin's signal can be connected to DAC0 and/or DAC1.

<< BACK

MCP47FVBXX

Online Datasheet

Features:

- Operating Voltage Range:
  - 2.7V to 5.5V - Full Specifications
  - 1.8V to 2.7V - Reduced Specifications
- Single/Dual Output Voltage Resolutions:
  - 8-bit: MCP47FVB01/2
  - 10-bit: MCP47FVB11/2
  - 12-bit: MCP47FVB21/2
- Rail-to-Rail Output
- Fast Settling Time of 6 µs (typical)
- DAC Voltage Reference Source Options:
  - Device VDD or External VREF pin
  - Internal Band Gap (1.22V typical)
- Output Gain Options: Unity (1x) or 2x
- (POR)/Brown-out Reset (BOR)
  - Auto Recall of DAC register setting
  - Auto Recall of Device Configuration
- I²C™ Interface
- 8-lead TSSOP

MCP47FVBX1 Device Block Diagram (Single-Channel Output)

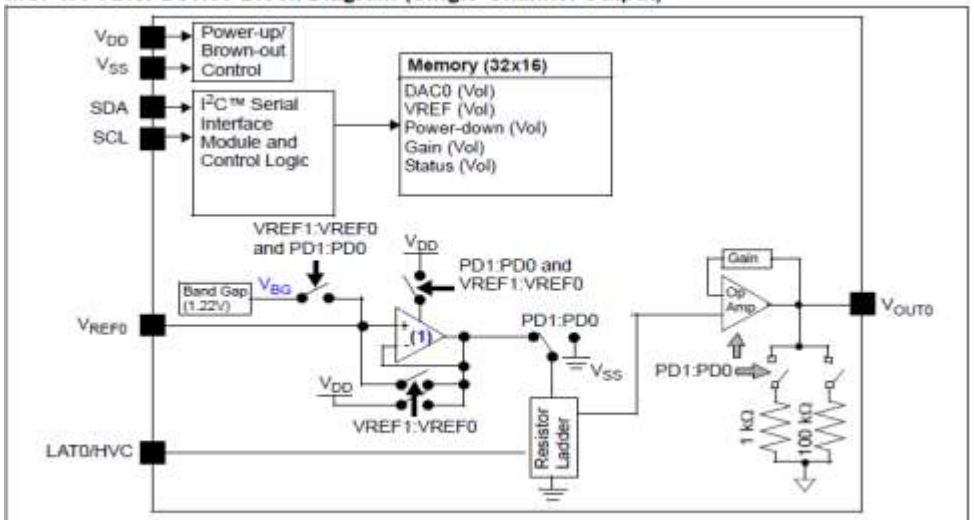

Note 1: If internal Band Gap is selected, this buffer has a 2x gain. If the G bit = '1', this is a total gain of 4.

Package Types

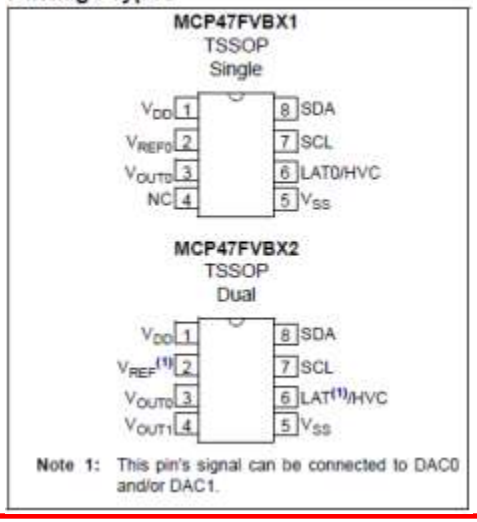

Note 1: This pin's signal can be connected to DAC0 and/or DAC1.

<< BACK

MCP48FEBXX

Online Datasheet

Features:

- Operating Voltage Range:
  - 2.7V to 5.5V - Full Specifications
  - 1.8V to 2.7V - Reduced Specifications
- Single/Dual Output Voltage Resolutions:
  - 8-bit: MCP48FEB01/2
  - 10-bit: MCP48FEB11/2
  - 12-bit: MCP48FEB21/2
- Rail-to-Rail Output
- Fast Settling Time of 7.8 µs (typical)
- DAC Voltage Reference Source Options:
  - Device VDD or External VREF pin
  - Internal Band Gap (1.22V typical)
- Output Gain Options: Unity (1x) or 2x
- Nonvolatile Memory (EEPROM):
  - User-programmed Power-on Reset (POR)/Brown-out Reset (BOR)
  - Auto Recall of DAC register setting
  - Auto Recall of Device Configuration
- SPI Interface
- 10-lead MSOP

MCP48FEBX1 Device Block Diagram (Single-Channel Output)

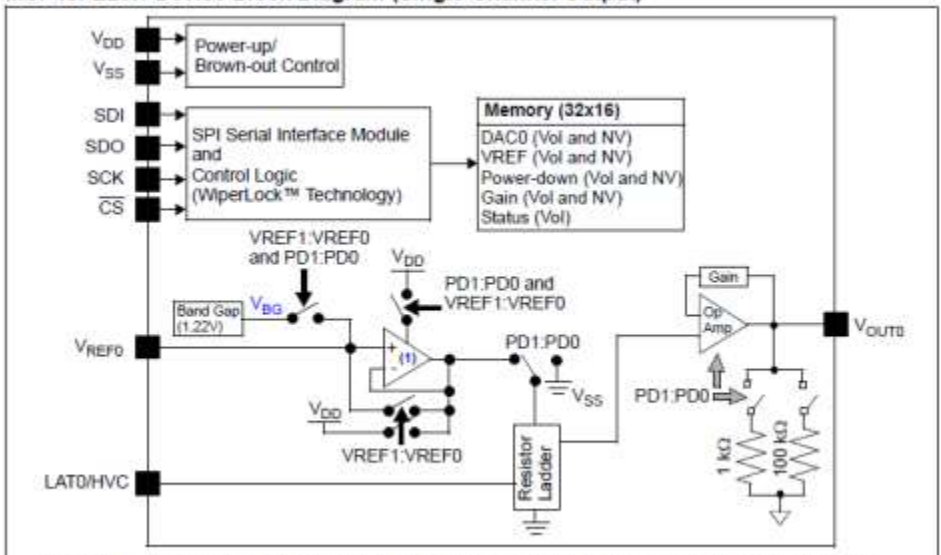

Note 1: If Internal Band Gap is selected, this buffer has a 2x gain. If the G bit = '1', this is a total gain of 4.

Package Types

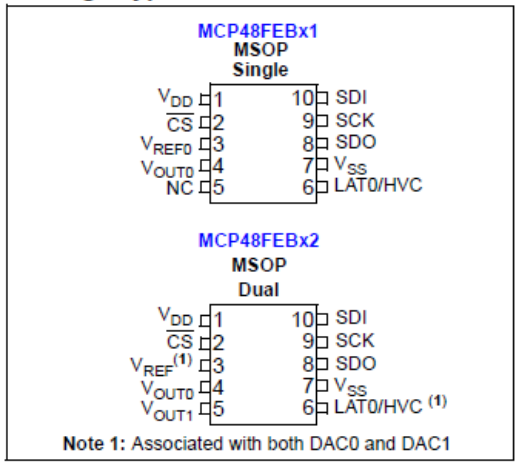

Note 1: Associated with both DAC0 and DAC1

<< BACK

MCP4801/4811/4821

Online Datasheet

Features:

- MCP4801: 8-Bit Voltage Output DAC
- MCP4811: 10-Bit Voltage Output DAC
- MCP4821: 12-Bit Voltage Output DAC
- Rail-to-Rail Output
- SPI Interface with 20 MHz Clock Support
- Simultaneous Latching of the DAC Output with LDAC Pin
- Fast Settling Time of 4.5 µs
- Selectable Unity or 2x Gain Output
- 2.048V Internal Voltage Reference
- 50ppm/°C V_{REF} Temperature Coefficient
- 2.7V to 5.5V Single-Supply Operation
- Extended Temperature Range: -40°C to +125°C

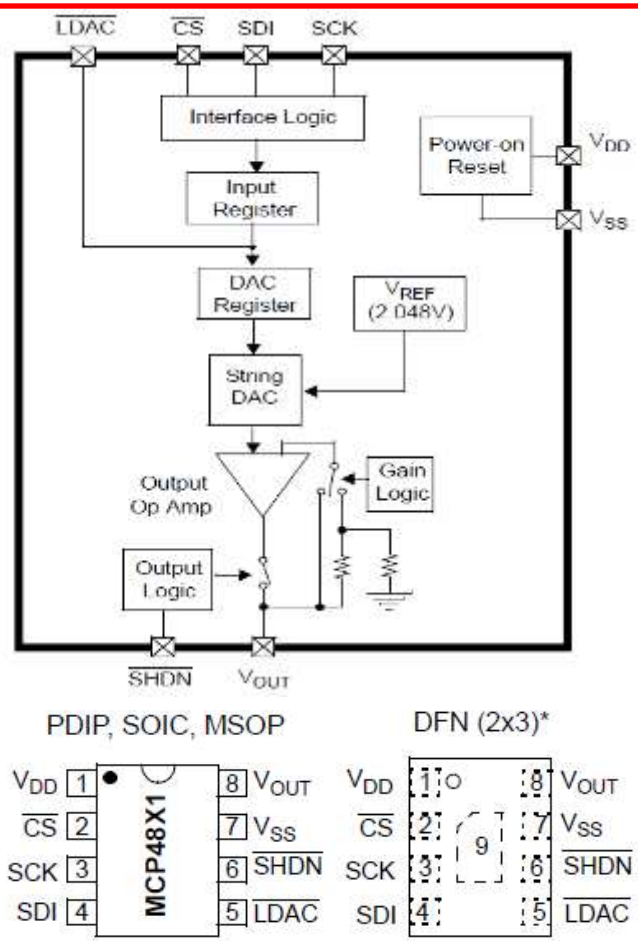

MCP4801: 8-bit single DAC
MCP4811: 10-bit single DAC
MCP4821: 12-bit single DAC
* Includes Exposed Thermal Pad (EP)

<< BACK

MCP4802/4812/4822

Online Datasheet

Features:

- MCP4802: Dual 8-Bit Voltage Output DAC
- MCP4812: Dual 10-Bit Voltage Output DAC
- MCP4822: Dual 12-Bit Voltage Output DAC
- Rail-to-Rail Output
- SPI Interface with 20 MHz Clock Support
- Simultaneous Latching of the Dual DACs with LDAC pin
- Fast Settling Time of 4.5 µs
- Selectable Unity or 2x Gain Output
- 2.048V Internal Voltage Reference
- 50ppm/°C V_{REF} Temperature Coefficient
- 2.7V to 5.5V Single-Supply Operation
- Extended Temperature Range: -40°C to +125°C

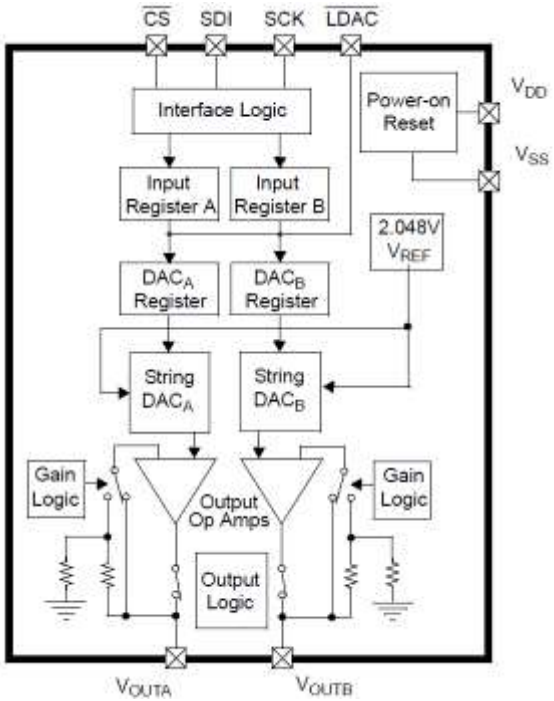

8-Pin PDIP, SOIC, MSOP

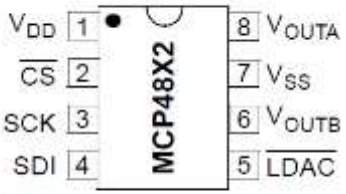

MCP4802: 8-bit dual DAC
MCP4812: 10-bit dual DAC
MCP4822: 12-bit dual DAC

<< BACK

MCP4901/4911/4921

Online Datasheet

Features:

- MCP4901: 8-Bit Voltage Output DAC
- MCP4911: 10-Bit Voltage Output DAC
- MCP4921: 12-Bit Voltage Output DAC
- Rail-to-Rail Output
- SPI Interface with 20 MHz Clock Support
- Simultaneous Latching of the DAC Output with LDAC Pin
- Fast Settling Time of 4.5 µs
- Selectable Unity or 2x Gain Output
- External Voltage Reference Input
- External Multiplier Mode
- 2.7V to 5.5V Single-Supply Operation
- Extended Temperature Range: -40°C to +125°C

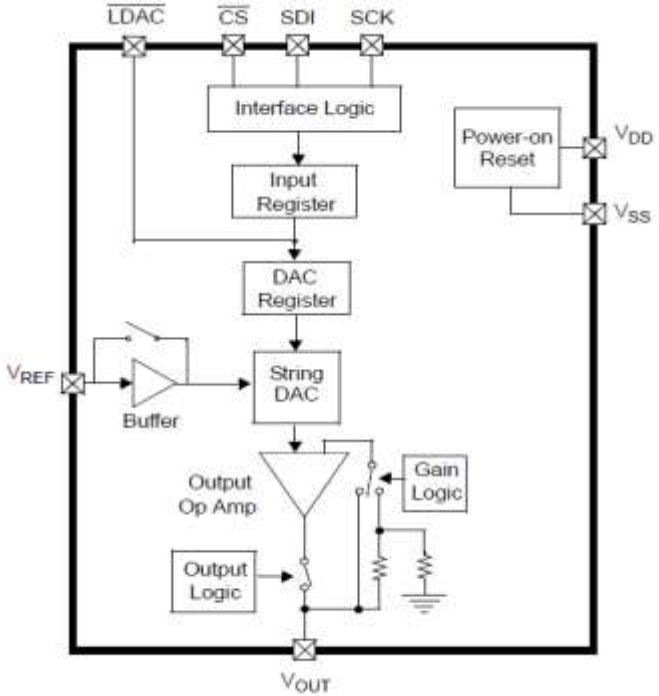

8-Pin PDIP, SOIC, MSOP **DFN-8 (2x3)***

MCP4901: 8-bit single DAC
MCP4911: 10-bit single DAC
MCP4921: 12-bit single DAC

* Includes Exposed Thermal Pad (EP)

<< BACK

MCP4902/4912/4922

Online Datasheet

Features:

- MCP4902: Dual 8-Bit Voltage Output DAC
- MCP4912: Dual 10-Bit Voltage Output DAC
- MCP4922: Dual 12-Bit Voltage Output DAC
- Rail-to-Rail Output
- SPI Interface with 20 MHz Clock Support
- Simultaneous Latching of the Dual DACs with LDAC pin
- Fast Settling Time of 4.5 µs
- Selectable Unity or 2x Gain Output
- External Voltage Reference Inputs
- External Multiplier Mode
- 2.7V to 5.5V Single-Supply Operation
- Extended Temperature Range: -40°C to +125°C

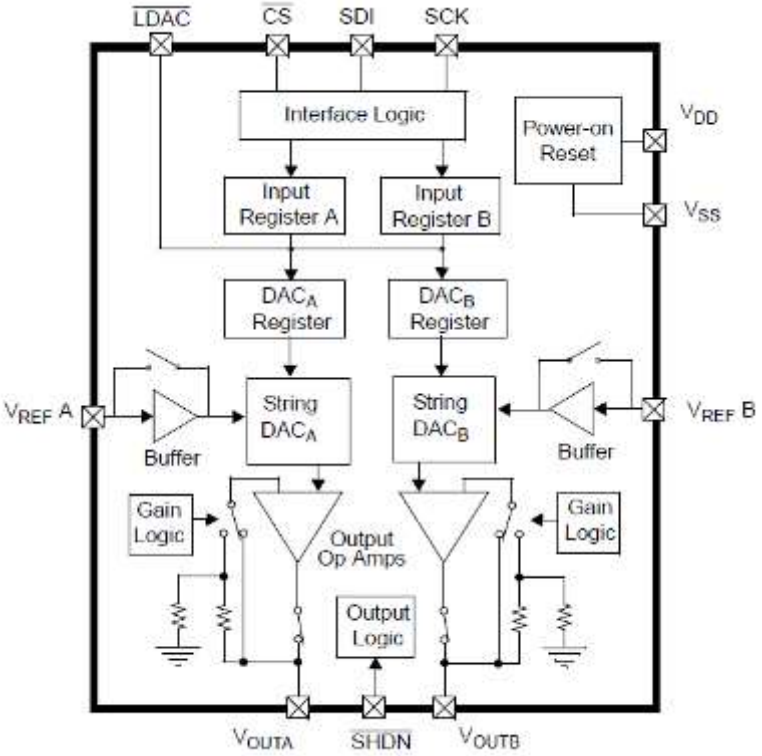

14-Pin PDIP, SOIC, TSSOP

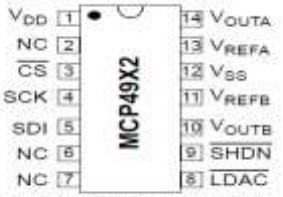

MCP4902: 8-bit dual DAC
MCP4912: 10-bit dual DAC
MCP4922: 12-bit dual DAC

<< BACK

MCP2515

Online Datasheet

Features:

- Implements CAN V2.0B at 1 Mb/s
- 0 - 8 byte length in the data field
- Standard and extended data and remote frames
- Receive buffers, masks and filters
- Data byte filtering on the first two data bytes (applies to standard data frames)
- Three transmit buffers with prioritization and abort features
- High-speed SPITM Interface (10MHz):
- One-Shot more ensures message transmission is attempted only one time
- Clock out pin with programmable prescaler
- Start-of-Frame (SOF) signal is available for monitoring the SOF signal
- Interrupt output pin with selectable enables
- Buffer Full output pins configurable as
  - Interrupt output for receive buffer
  - General purpose Output
- Request-to-Send (RTS) input pins individually configurable as
  - Control pins to request transmission for each transmit buffer
  - General Purpose inputs
- Low-Power CMOS technology
  - Operates from 2.7V to 5.5V
  - 5mA active current (typ.)
  - 1µA standby current (typ.) (Sleep mode)
- Temperature ranges: -40°C to +125°C

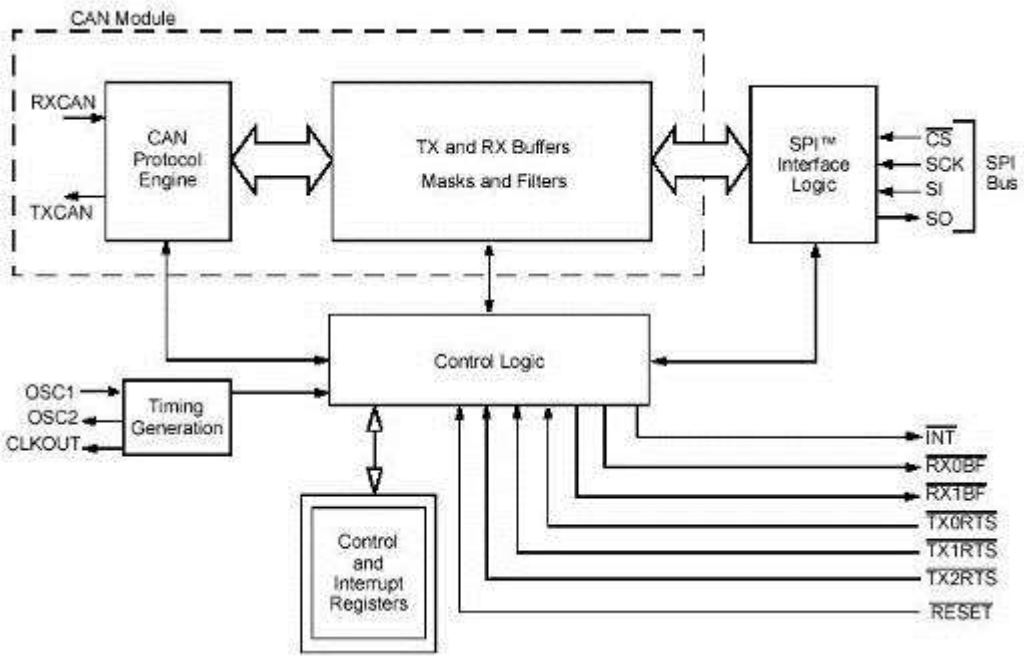

<< BACK

MCP25625

Online Datasheet

Features:

- Stand-Alone CAN2.0B Controller with Integrated CAN Transceiver and Serial Peripheral Interface (SPI)
- Up to 1 Mb/s Operation
- Very Low Standby Current (10 µA, typical).
- Up to 10 MHz SPI Clock Speed
- Interfaces Directly with Microcontrollers with 2.7V to 5.5V I/O
- Packages: SSOP-28L and 6x6 QFN-28L
- Extended Temperature Range: -40°C to +125°C

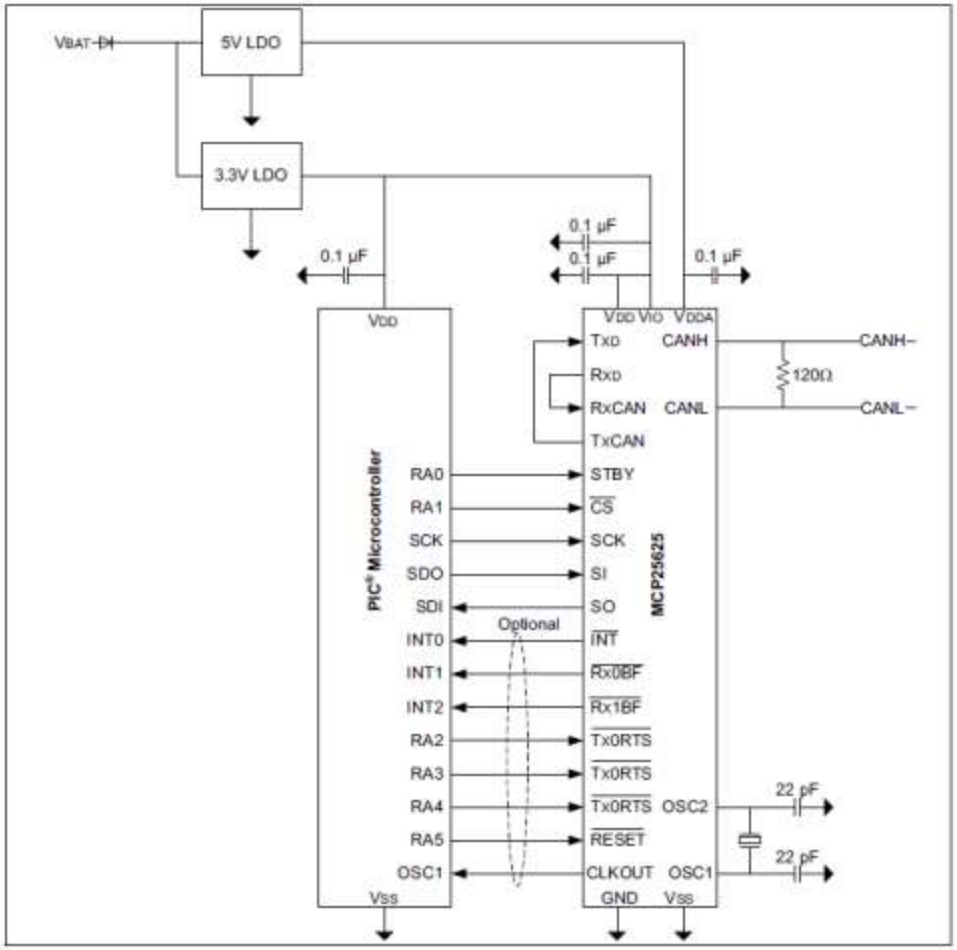

<< BACK

MCP2517FD

Online Datasheet

Features:

- External CAN Flexible Data-rate Controller
- SPI Interface
- Conforms to ISO11898-1:2015
- Supports both CAN 2.0B and CAN FD
- Arbitration Bit Rate up to 1 Mbps
- Data Bit Rate up to 8 Mbps
- Up to 20MHz SPI Clock Speed
- 31 FIFOs configurable as transmit or receive
- 32 Flexible Filter and Mask Objects
- One Transmit Queue
- 32-bit Time Stamp
- Bus Health Diagnostics and Error Counters
- VDD: 2.7V-5.5V
- Active Current Max: 12mA @ 5.5V, 40 MHz -- CAN Clock
- Sleep Current: 10uA, Typical
- Temperature Range: -40C to +150C
- Packages: VDFN14 (Wettable Flanks), SOIC14

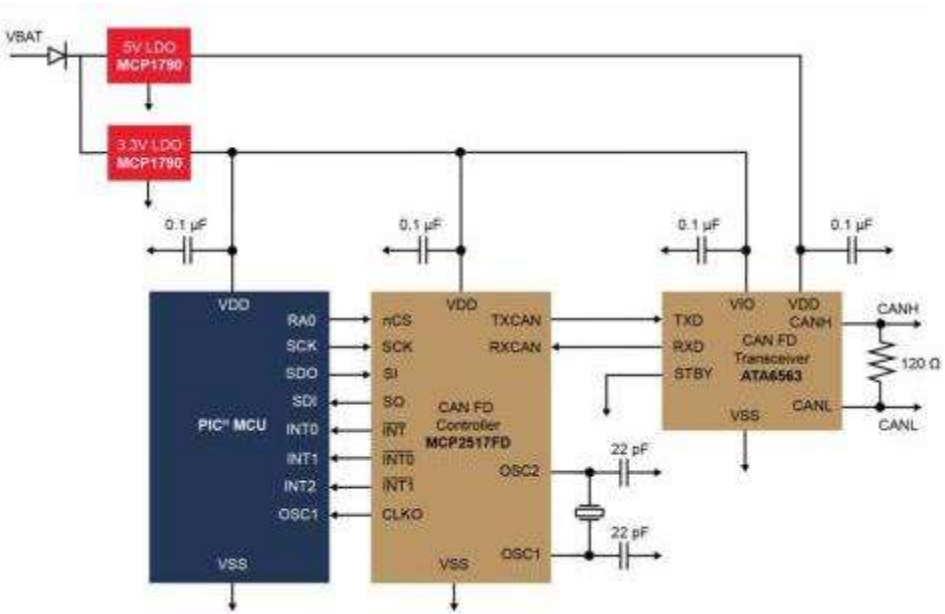

Application Block Diagram

<< BACK

MCP25020/25

Online Datasheet

Features:

- Implements CAN V2.0B
  - Programmable bit rate up to 1 Mb/s
  - One programmable mask, two programmable filters
  - Three auto-transmit buffers, two message reception buffers
  - Does not require synchronization or configuration messages
  - Enables simple CAN nodes to be created without an MCU
- Hardware Features
  - Non-volatile memory for user configuration
  - User configuration automatically loaded on power-up
  - 8 GPIO lines individually selectable as inputs or outputs
  - Individually selectable transmit-on-pin change for each input
  - Programmable conversion clock and V_{REF} sources (MCP2505X devices only)
  - Message scheduling capability
  - Two 10-bit PWM outputs with independently programmable frequencies
  - Device configuration can be modified via CAN bus messages
  - In-Circuit Serial Programming™ (ICSP™) of default configuration memory
  - Optional 1-wire CAN bus operation
- Low-power CMOS technology
  - Operates from 2.7V to 5.5V
  - 10mA active current (typ.)
  - 30µA standby current (CAN Sleep mode)
- 14-pin PDIP (300 mil) and SOIC (150 mil) packages
- Available temperature ranges:
  - Industrial (I): -40°C to +85°C
  - Extended (E): -40°C to +125°C

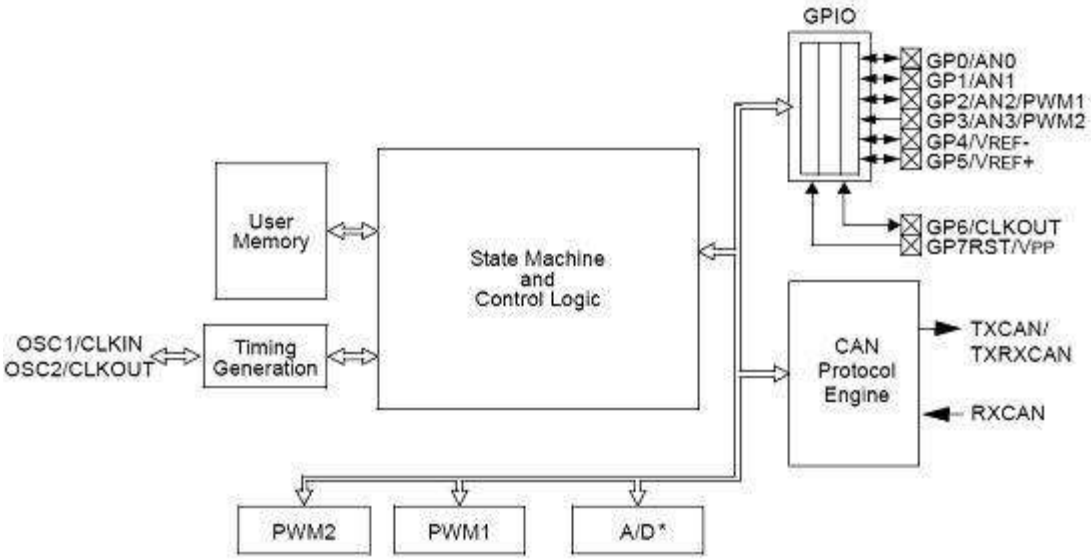

* Only the MCP2505X devices have the A/D module.

<< BACK

MCP25050/5

Online Datasheet

Features:

- Implements CAN V2.0B
  - Programmable bit rate up to 1 Mb/s
- Hardware Features
  - Non-volatile memory for configuration
- Eight general-purpose I/O lines
  - Individually selectable transmit-on-pin change for each input
  - Programmable conversion clock and V_{RE} (MCP2505X devices only)
  - Message scheduling capability
  - Two 10-bit PWM outputs with independently programmable frequencies
  - In-Circuit Serial Programming™ (ICSP™) of default configuration memory
  - Optional 1-wire CAN bus operation
- Low-power CMOS technology
  - Operates from 2.7V to 5.5V
  - 30µA standby current (CAN Sleep mode)
- 14-pin PDIP and SOIC packages
- Available temperature ranges:
  - Industrial (I): -40°C to +85°C
  - Extended (E): -40°C to +125°C

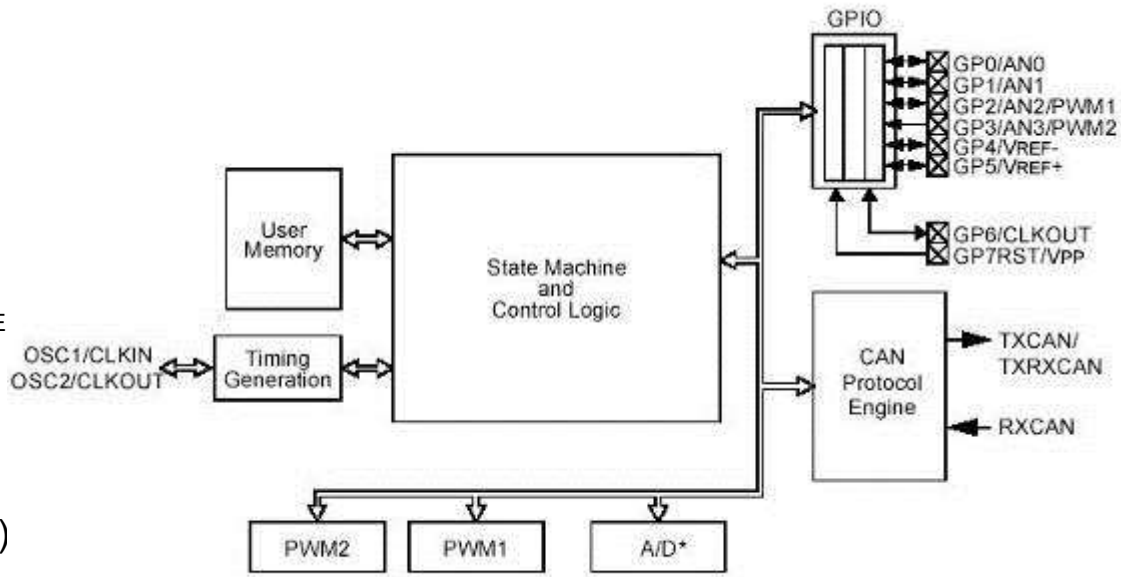

* Only the MCP2505X devices have the A/D module.

<< BACK

24V CAN Transceiver Choice Matrix

Device	Classic CAN Transceiver Only	CAN FD Capable Transceiver (Mb/s)	CAN 2.0 Controller	Basic Remote Wake	Wake-up Pattern	Silent Mode	Standby Mode	3V & 5V Compatible TXD/Stby	Split pin	Vio pin (range)	ISO Compliance	Package Type
MCP2557FD	NO	2,5,8Mb/s	NO	NO	NO	YES	NO	YES	No	NO	ISO-11898-2,5 ISO/DIS-11898-2	8/DFN 8/SOIC 8/TDFN
MCP2558FD	NO	2,5,8Mb/s	NO	NO	NO	YES	NO	NO	No	1.7V-5.5V	ISO-11898-2,5 ISO/DIS-11898-2	8/DFN 8/SOIC 8/TDFN
MCP2542FD	NO	2,5,8Mb/s	NO	YES	NO	NO	YES	YES	No	1.7V-5.5V	ISO-11898-2,5 ISO/DIS-11898-2	8/DFN 8/SOIC 8/TDFN
MCP2542WFD	NO	2,5,8Mb/s	NO	NO	YES	NO	YES	YES	No	1.7V-5.5V	ISO-11898-2,5 ISO/DIS-11898-2	8/DFN 8/SOIC 8/TDFN
MCP2544FD	NO	2,5,8Mb/s	NO	YES	NO	NO	YES	YES	No	NO	ISO-11898-2,5 ISO/DIS-11898-2	8/DFN 8/SOIC 8/TDFN
MCP2544WFD	NO	2,5,8Mb/s	NO	NO	YES	NO	YES	YES	No	NO	ISO-11898-2,5 ISO/DIS-11898-2	8/DFN 8/SOIC 8/TDFN
MCP25612FD	NO	2,5,8Mb/s	NO	YES	NO	NO	YES	NO	No	NO	ISO-11898-2, 5	14/SOIC
MCP2561FD	NO	2,5,8Mb/s	NO	YES	NO	NO	YES	NO	YES	NO	ISO-11898-2, 5	8/PDIP 8/SOIC 8/DFN
MCP2562FD	NO	2,5,8Mb/s	NO	YES	NO	NO	YES	YES	No	1.8V-5.5V	ISO-11898-2, 5	8/PDIP 8/SOIC 8/DFN
MCP2561	YES	NO	NO	YES	NO	NO	YES	NO	YES	NO	ISO-11898-2, 5	8/PDIP 8/SOIC 8/DFN
MCP2562	YES	NO	NO	YES	NO	NO	YES	YES	No	1.8V-5.5V	ISO-11898-2, 5	8/PDIP 8/SOIC 8/DFN
MCP25625	YES	NO	YES	YES	NO	NO	YES	YES	No	2.7V-5.5V	ISO-11898-2, 5	28/SSOP 28/QFN

<< BACK

MCP2561/2

Online Datasheet

Features:

- Supports 1 Mb/s operation
- Implements ISO-11898-5 standard physical layer requirements
- Very low standby current (Typ: 5µA)
- VIO supply pin (MCP2562) to interface directly to CAN controllers and microcontrollers with1.8V to 5V I/O
- SPLIT output pin (MCP2561) to stabilize common mode in biased split termination schemes
- Permanent dominant detection on TXD and bus
- Power-on Reset and voltage brown-out protection on VDD and VIO pin
- Short-circuit protection
- Protection against high-voltage transients
- Thermal Shutdown protection
- Suitable for 12V and 24V systems
- Up to 112 nodes can be connected
- High-noise immunity
- High ESD protection on CANH and CANL, IEC61000-4-2 > 8kV
- Available in PDIP-8L, SOIC-8L and 3x3 DFN-8L.
- Temperature ranges: Extended -40°C to +125°C, High -40°C to +150°C

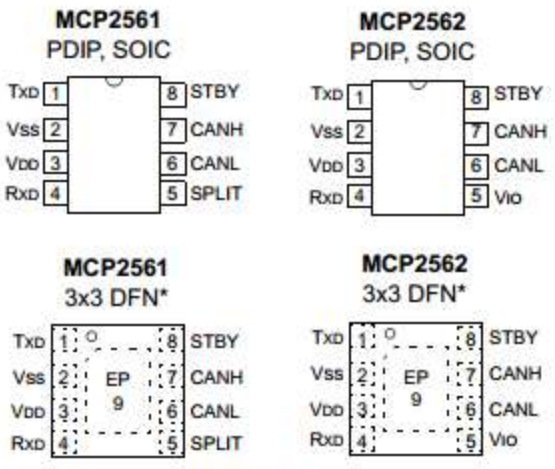

<< BACK

MCP2561/2FD

Online Datasheet

Features:

- Optimized for CAN FD (Flexible Data rate) at 2, 5 & 8 Mbps
    - Maximum Propagation Delay: 120 ns
    - Loop Delay Symmetry: -10%/+10% (2 Mbps)
- Implements ISO-11898-2 & ISO-11898-5 Standard Physical Layer
- Very Low Standby Current of 5 µA (typical)
- VIO Supply Pin to Interface Directly to CAN Controllers and Microcontrollers with 1.8V to 5.5V I/O
- SPLIT Output Pin
- Detection of Ground Fault
- Power-on Reset and Voltage Brown-Out Protection on VDD Pin
- Short-Circuit Protection
- Protection Against High-Voltage Transients
- Automatic Thermal Shutdown Protection
- Suitable for 12V and 24V Systems
- Meets/exceeds automotive requirements including “Hardware Requirements for LIN, CAN and FlexRay Interfaces in Automotive Applications”, Version 1.3, May 2012
- ESD Protection on CANH & CANL, IEC61000-4-2 up to ±14 kV
- Available in PDIP-8L, SOIC-8L and 3x3 DFN-8L
- Temperature ranges:
    - Extended (E): -40°C to +125°C
    - High (H): -40°C to +150°C

FIGURE 1-1: MCP2561FD WITH SPLIT PIN

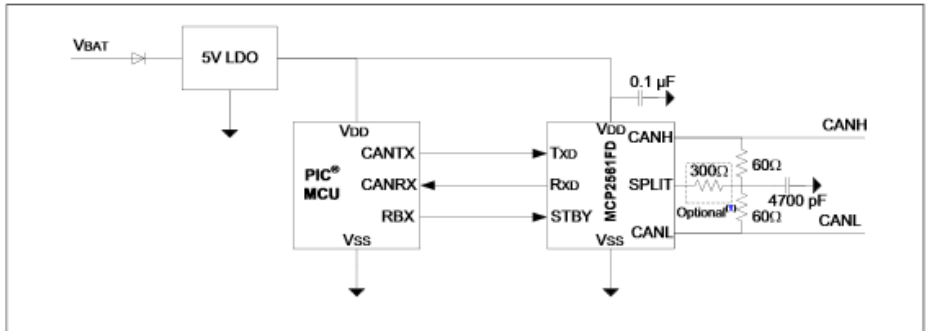

Note 1: Optional resistor to allow communication during bus failure (CANL shorted to ground).

FIGURE 1-2: MCP2562FD WITH VIO PIN

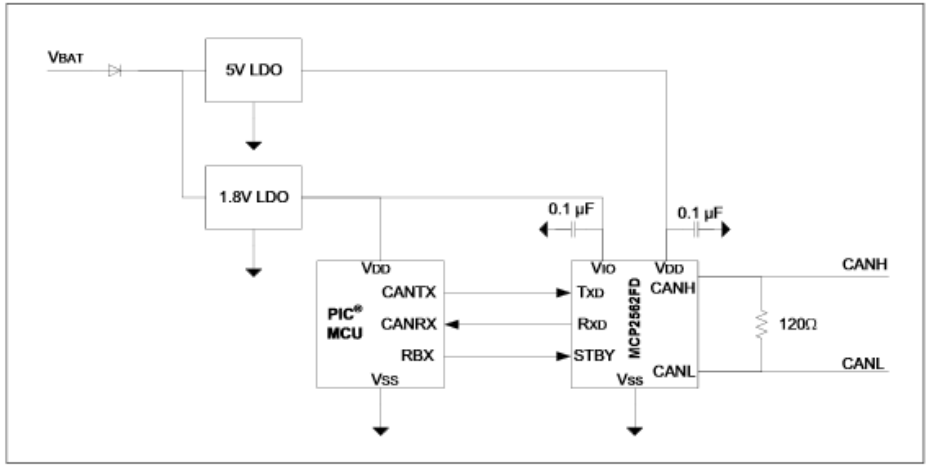

<< BACK

MCP2542FD
MCP2544FD

Online Datasheet

Features:

- **MCP2544FD with No Connect pin 5**
- **MCP2542FD with VIO pin (internal level shifting)**
- Supports both Classic CAN or CAN Flexible Data Rate applications
- Optimized for CAN FD (Flexible Data rate) at 2, 5 and 8 Mbps Operation
- Meets the latest ISO/DIS 11898-2:2015 specification
- Supports Wake-up pattern
- AEC-Q100 Grade 0
- Very Low Standby Current (5 µA, typical)
- VIO Supply Pin to Interface Directly to CAN Controllers and Microcontrollers with 1.7V to 5.5V I/O
- Detection of Ground Fault:
- Permanent Dominant Detection on TXD
- Permanent Dominant Detection on Bus
- Power-on Reset and Voltage Brown-Out Protection on VDD Pin
- Protection Against Damage Due to Short-Circuit Conditions (Positive or Negative Battery Voltage)
- Protection Against High-Voltage Transients in Automotive Environments
- Automatic Thermal Shutdown Protection
- Suitable for 12V and 24V Systems
- Extremely robust meeting automotive EMC hardware requirements
- Smallest package option in the industry 2x3 DFN-8L
- Also available in SOIC-8L and 3x3 DFN-8L
- Temperature ranges:
- Extended (E): -40°C to +125°C
- High (H): -40°C to +150°C

Block Diagram

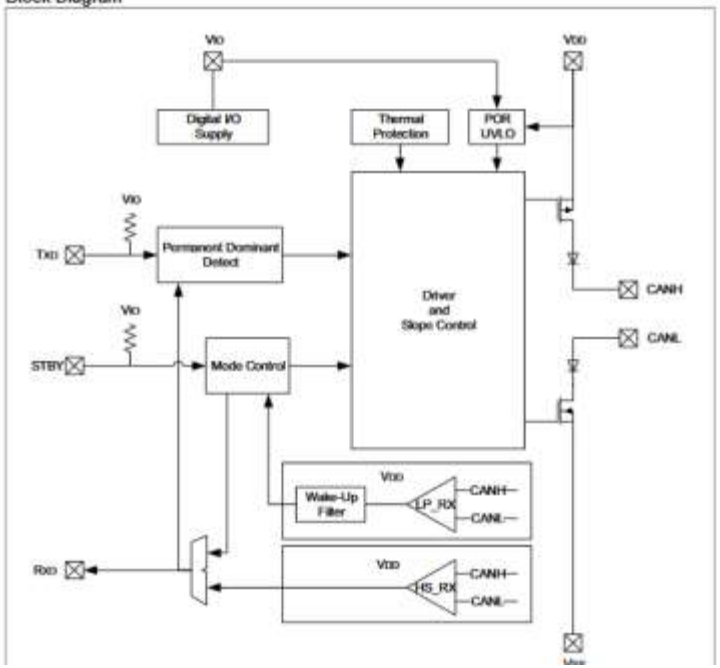

MCP2542FD
MCP2542WFD
8-Lead SOIC

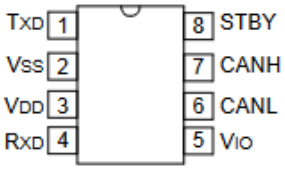

MCP2544FD
MCP2544WFD
8-Lead SOIC

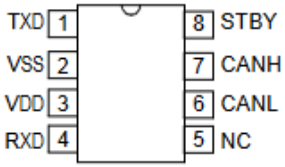

Also Available in 2x3 DFN and 3x3 DFN

<< BACK

MCP2557FD
MCP2558FD

Online Datasheet

Features:

- **MCP2557FD with No Connect pin 5**
- **MCP2558FD with VIO pin (internal level shifting)**
- Supports both Classic CAN or CAN Flexible Data Rate applications
- Optimized for CAN FD (Flexible Data rate) at 2, 5 and 8 Mbps Operation
- Meets the latest ISO/DIS 11898-2:2015 specification
- Supports Silent Mode
- Prevent disruption on the network due to local fault
- Increased system reliability through redundancy
- Test connection of the network
- AEC-Q100 Grade 0
- VIO Supply Pin to Interface Directly to CAN Controllers and Microcontrollers with 1.7V to 5.5V I/O
- CAN Bus Pins are Disconnected when Device is Unpowered
- An Unpowered Node or Brown-Out Event will Not Load the CAN Bus
- Detection of Ground Fault:
- Permanent Dominant Detection on TXD
- Permanent Dominant Detection on Bus
- Power-on Reset and Voltage Brown-Out Protection on VDD Pin
- Protection Against Damage Due to Short-Circuit Conditions (Positive or Negative Battery Voltage)
- Protection Against High-Voltage Transients in Automotive Environments
- Automatic Thermal Shutdown Protection
- Suitable for 12V and 24V Systems
- Extremely robust meeting automotive EMC hardware requirements
- Smallest 8L CAN transceiver package available-2x3 TDFN-8L
- Also available in SOIC-8L and 3x3 DFN-8L
- Temperature ranges:
- High (H): -40°C to +150°C

Block Diagram

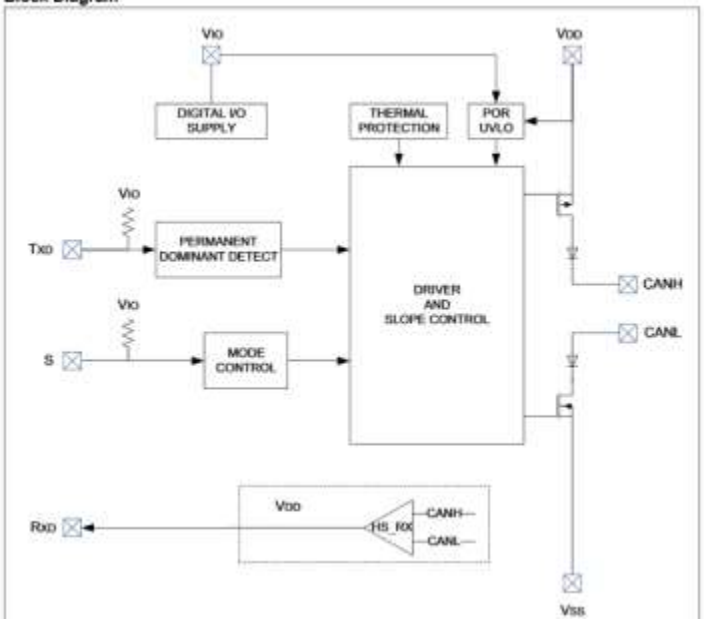

MCP2557FD
SOIC

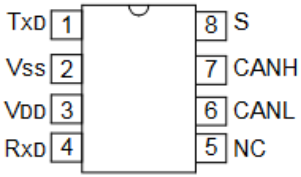

MCP2558FD
SOIC

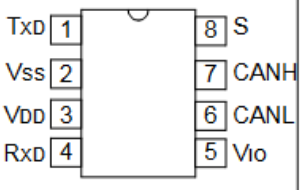

Also Available in 2x3 and 3x3 DFN

<< BACK

MCP25612FD

Online Datasheet

Features:

- Support both ‘Classsic CAN’ and CAN FD
- Optimized for up to 8Mb/s Operation
- Vdd = 4.5V to 5.5V
- Standby Current: 5µA,(typ.) per transceiver
- ISO 11898-2 and ISO 11898-5 compliant
- 14-lead SOIC
- Temperature Ranges:
    - Extended Temp (E): -40°C to +125°C
    - High Temp (H): -40°C to +150°C

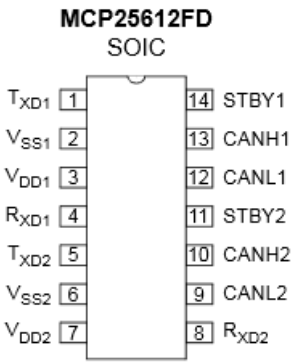

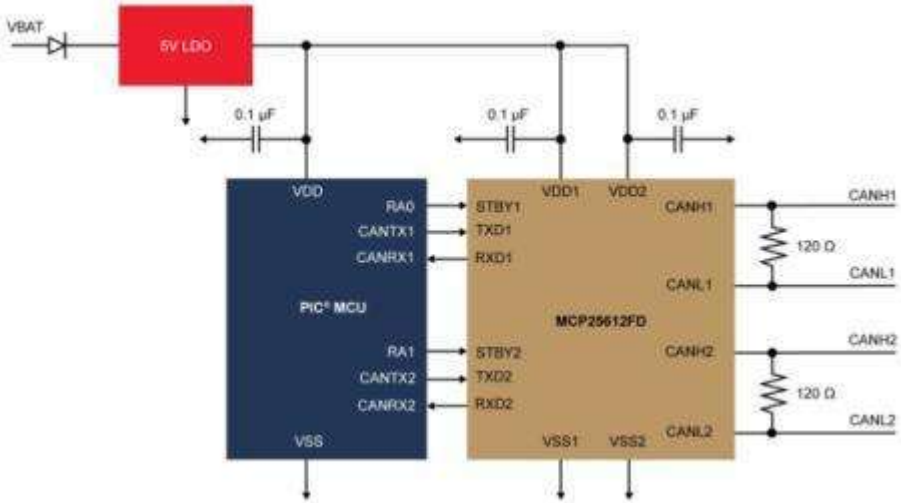

<< BACK

ATA6560/61

Online Datasheet

Features:

- Fully ISO 11898-2, ISO11898-5, ISO/DIS11898-2 (2016) and SAEJ2962-2 compliant
- CAN FD ready
- Communication speed up to 5Mbit/s
- Low electromagnetic emission (EME) and high electromagnetic immunity (EMI)
- Differential receiver with wide common mode range
- ATA6560: Silent mode (receive only)
- ATA6561: VIO Supply Pin to interface direct to CAN Controllers and Microcontrollers with 2.8V to 5.5V I/O voltage
- Remote wake-up capability via CAN bus
- Basic wake up
- Functional behavior predictable under all supply conditions
- Transceiver disengages from the bus when not powered up
- RXD recessive clamping detection
- High electrostatic discharge (ESD) handling capability on the bus pins
- Bus pins protected against transients in automotive environments
- Transmit data (TXD) dominant time-out function
- Under-voltage detection on VCC and VIO pins
- CANH/CANL short-circuit and over-temperature protected
- Qualified according to AEC-Q100
- Fulfills the OEM Hardware Requirements for CAN Interfaces in Automotive Applications

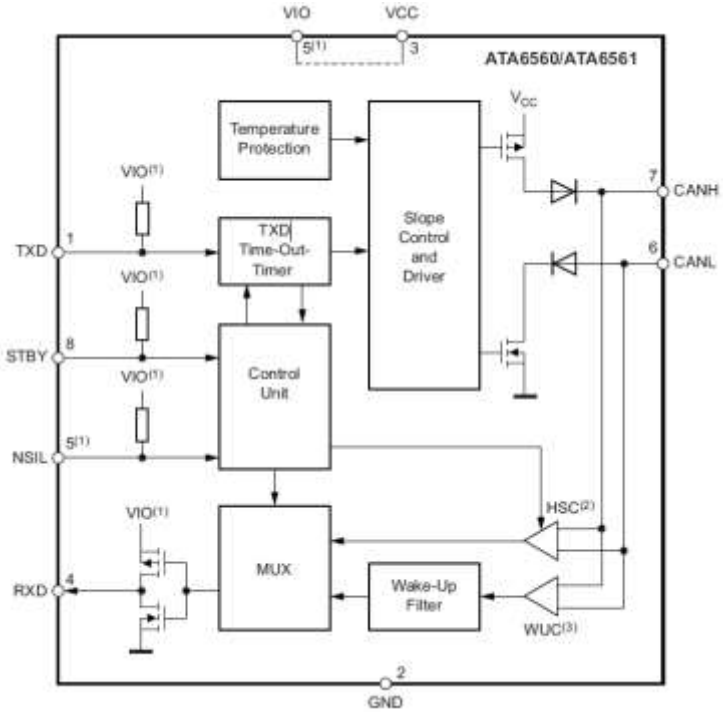

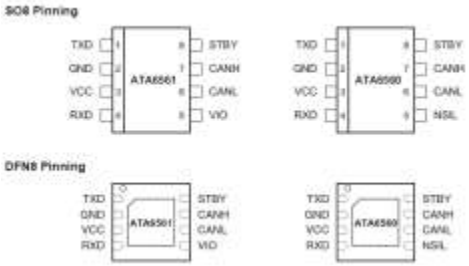

DFN package with wettable flanks

<< BACK

ATA6562/63

Online Datasheet

Features:

- Fully ISO 11898-2, ISO 11898-5, ISO 11898-2: 2016 – - and SAE J2962-2 compliant
- Communication speed up to 5Mbit/s (CAN FD capable)
- Low EME and high EMI
- Differential receiver with wide common mode range
- ATA6562: Silent mode (receive only)
- ATA6563: VIO Pin to interface direct to 2.8V – 5.5V µCs
- Wake-Up via CAN Bus - Wake-Up on Pattern (WUP), - - acc. ISO 11898-2: 2016, 3.8 µs Activity Filter Time
- Functional behavior defined under all supply conditions
- Transceiver disengages from the bus when unpowered
- RXD recessive clamping detection
- High ESD handling capability on the bus pins
- Bus pins protected against automotive transients
- Transmit data (TXD) dominant time-out function
- Under-voltage detection on VCC and VIO pins
- Bus pins short-circuit and over- temperature protected
- Fulfills the OEM Hardware Requirements, Rev. 1.3
- Qualified according to AEC-Q100
- Two Ambient Temperature Grades: +125°C and +150°C

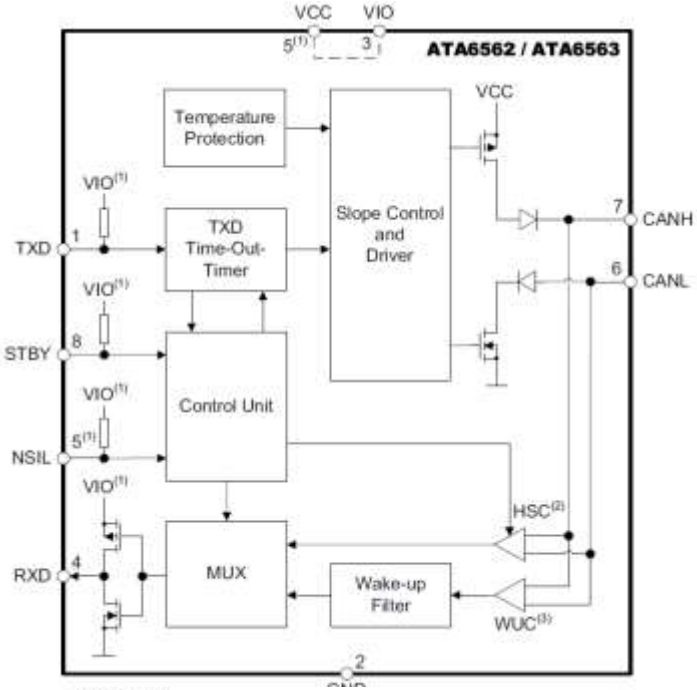

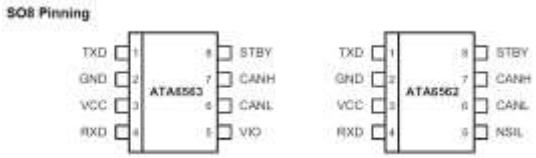

DFN package with wettable flanks

<< BACK

ATA6564

Online Datasheet

Features:

- Fully ISO 11898-2, ISO 11898-2: 2016 and SAE –
  - J2962-2 compliant
- Communication speed up to 5Mbit/s (CAN FD capable)
- Low EME and high EMI
- Differential receiver with wide common mode range
- Compatible to 2.8V – 5.5V microcontrollers
- Functional behavior defined under all supply conditions
- Transceiver disengages from the bus when unpowered
- RXD recessive clamping detection
- High ESD handling capability on the bus pins
- Bus pins protected against automotive transients
- Transmit data (TXD) dominant time-out function
- Under-voltage detection on VCC and VIO pins
- Bus pins short-circuit and over- temperature protected
- Fulfills the OEM Hardware Requirements, Rev. 1.3
- Qualified according to AEC-Q100
- Two Ambient Temperature Grades: +125°C and +150°C
- Packages: 8- pin SOIC and 8- pin VDFN

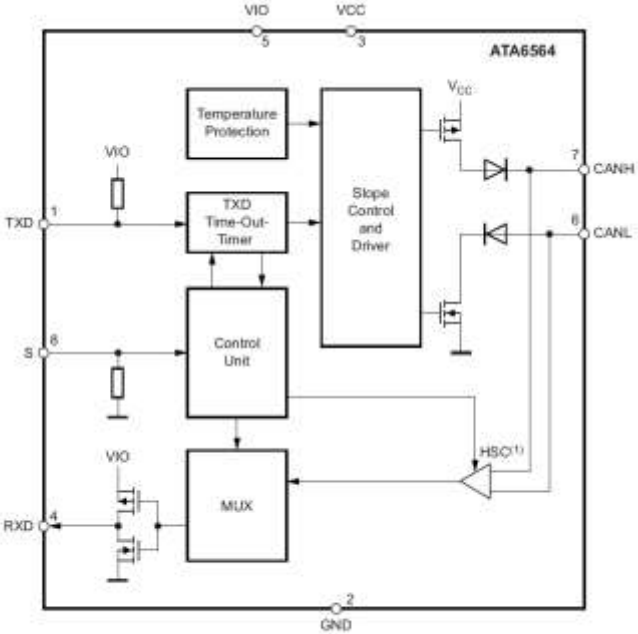

Note 1: HSC: High-speed comparator.

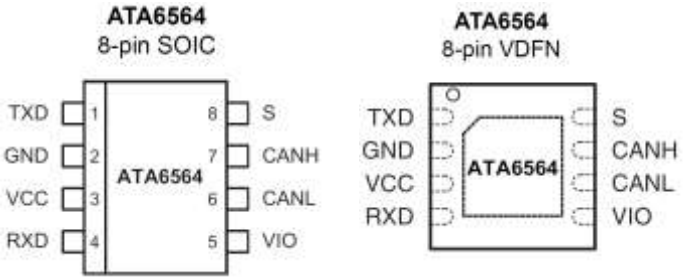

DFN package with wettable flanks

<< BACK

ATA6566

Online Datasheet

Features:

- Compliant with Japanese OEM Requirements
- Certified according latest VeLIO Test Specification
- Fully ISO 11898-2, ISO 11898-5, ISO 11898-2: 2016
  - and SAE J2962-2 compliant
- Communication speed up to 2 Mbit/s (CAN FD capable)
- Low EME and high EMI
- Differential receiver with wide common mode range
- VIO Pin to interface direct to 2.8V – 5.5V microcontroller
- Wake-Up via CAN Bus - Wake-Up on Pattern (WUP), -
  - acc. ISO 11898-2: 2016, 3.8 µs Activity Filter Time
- Transceiver disengages from the bus when unpowered
- RXD recessive clamping detection
- Bus pins protected against ESD & automotive –
  - transients
- Transmit data (TXD) dominant time-out function
- Under-voltage detection on VCC and VIO pins
- Bus pins short-circuit and over- temperature protected
- Fulfills the OEM Hardware Requirements, Rev. 1.3
- Qualified according to AEC-Q100
- Two Ambient Temperature Grades: +125°C and +150°C

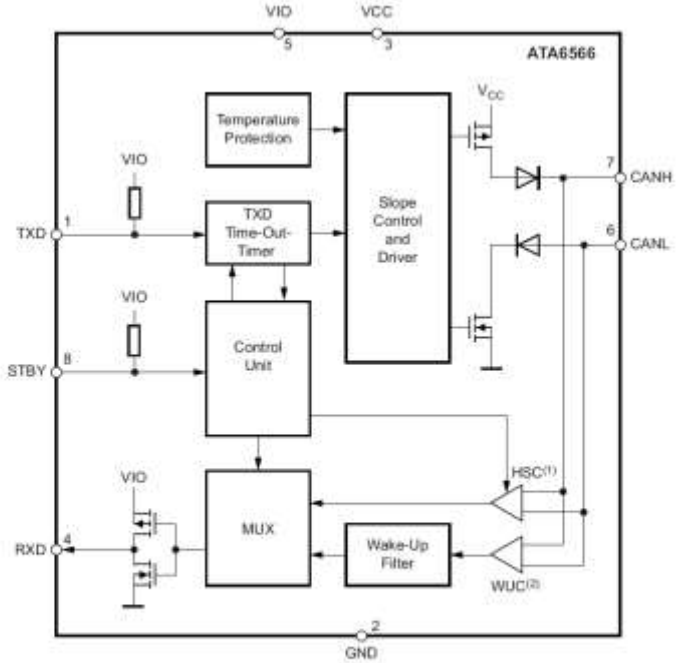

Note 1: HSC: High-speed comparator.
2: WUC: Wake-up comparator.

ATA6566
8-pin SOIC

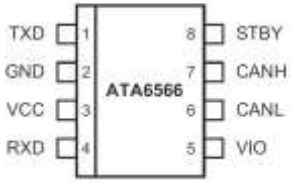

ATA6566
8-pin VDFN

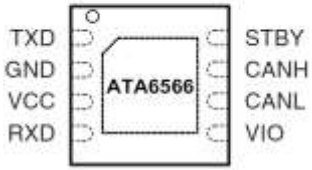

VDFN8 package with wettable flanks

<< BACK

ATA6565

Online Datasheet

Features:

- Fully ISO 11898-2, ISO 11898-5, ISO 11898-2: 2016 and
  – SAE J2962-2 compliant
- Communication speed up to 5Mbit/s (CAN FD capable)
- Low EME and high EMI
- Differential receiver with wide common mode range
- Wake-Up via CAN Bus - Wake-Up on Pattern (WUP), -
  - acc. ISO 11898-2: 2016, 3.8 µs Activity Filter Time
- Transceiver disengages from the bus when unpowered
- RXD recessive clamping detection
- Bus pins protected against ESD & automotive transients
- Transmit data (TXD) dominant time-out function
- Under-voltage detection on VCC pin
- Bus pins short-circuit and over-temperature protected
- Fulfills the OEM Hardware Requirements
- Qualified according to AEC-Q100
- Two Ambient Temperature Grades:
  - +125°C and +150°C
- VDF14 Package with wettable flanks

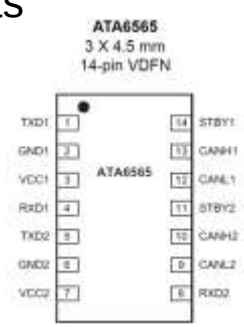

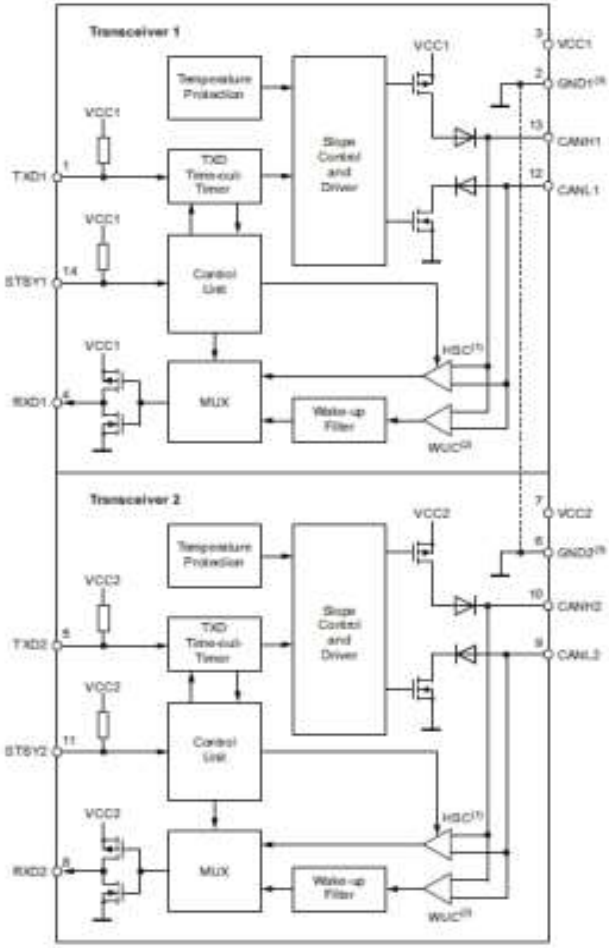

Notes:
1. HSC: High-speed comparator
2. WUC: Wake-up comparator
3. GND1 and GND2 are internally connected

<< BACK

ATA6570

Online Datasheet

Features:

- High speed CAN transceiver compliant to ISO 11898-2, ISO11898-5/6, ISO/DIS 11898-2 (2016), SAEJ2962-2
- Fulfills the OEM Requirements for Partial Networking Rev. 2.2
- Watchdog with clock source, Window & Timeout mode
- Fulfills the Auto OEM Hardware Requirements for CAN Interfaces in Automotive Applications
- CAN data rate to 1Mbit/s and CAN FD data rate to 5Mbit/s
- 3.3V to 5V microcontrollers can interfaced via the VIO pin
- Battery supply and CAN bus pins protected against – transients according to ISO7637
- Six operation modes
- Power off / MCU Reset / Sleep / Standby /
- Normal / Over-temp mode
- Four wake-up sources with wake-up source recognition
- Local wake-up via pin WAKE
- Remote wake-up pattern according to ISO 11898-5
- Remote wake-up frame according to ISO 11898-6
- Host wake-up via SPI

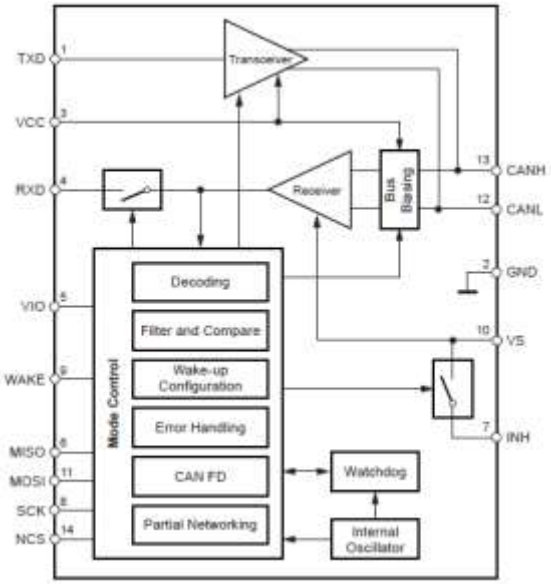

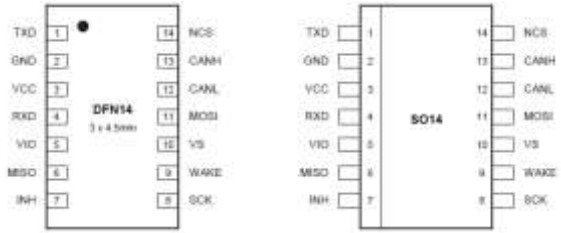

DFN package with wettable flanks

<< BACK

MCP2120

Online Datasheet

Features:

- Supports with IrDA® Physical Layer Specification (version 1.3)
- UART to IR Encoder/Decoder
  - Interfaces with IrDA Compliant Transceivers
  - Used with any UART, including standard 16550 UART and microcontroller UART
- Transmit/Receive formats supported:
  - 1.63µs
- Hardware or Software Baud rate selection
  - Up to IrDA standard 115.2 kbaud operation
  - Up to 312.5 kbaud operation (at 20MHz)
  - Low power mode
- Pb-free packaging

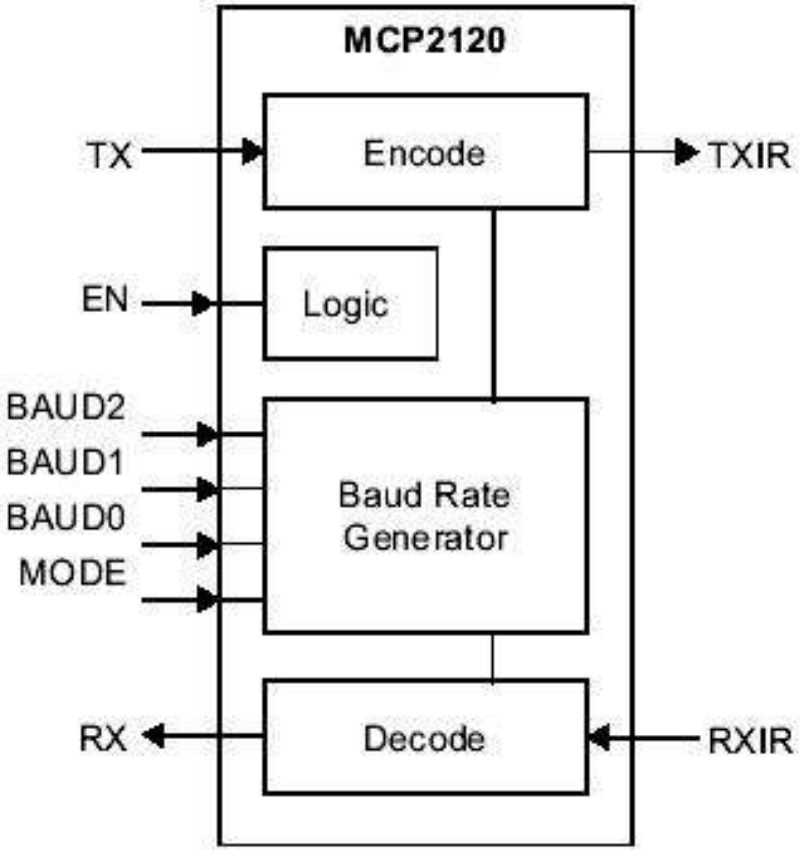

<< BACK

MCP2122

Online Datasheet

Features:

- Pinout compatible with HSDL-7000
- Compliant with IrDA® Standard Physical Layer Specification (version 1.3)
- UART to IrDA Standard Encoder/Decoder
  - Interfaces with IrDA Standard Compliant Transceiver
- Baud Rates:
  - Up to IrDA Standard 115.2 kbaud Operation
- Transmit/Receive Formats (Bit Width) Supported:
  - 1.63µs
- Low-power Mode (2µA at 1.8V, +125°C)
- Pb-free packaging

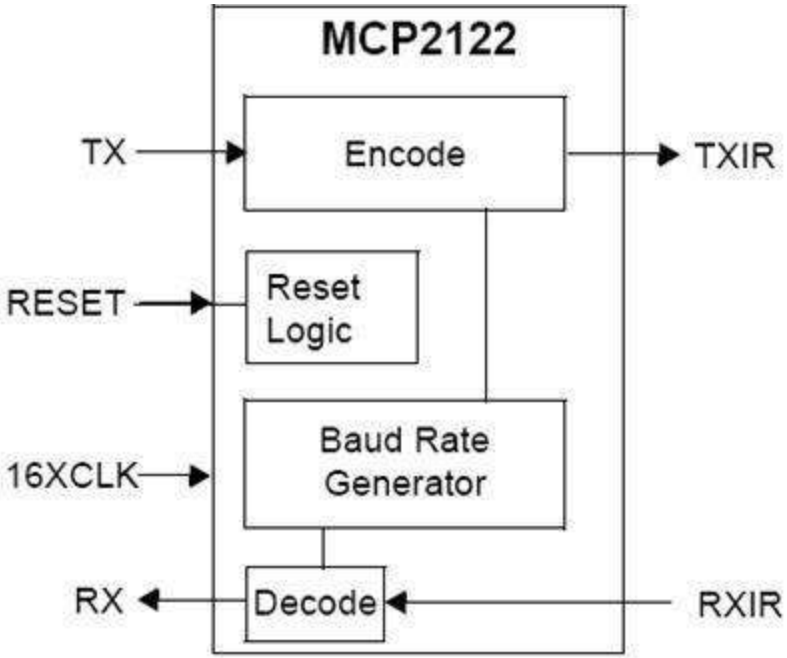

<< BACK

MCP2140A

Online Datasheet

Features:

- Implements the IrDA® standard
- Provides IrDA standard physical signal layer
- Includes UART-to-IrDA standard encoder/ decoder functionality
- Easily communicates with 16-bit PIC Microcontroller IrDA Standard Stack Library
- UART interface for connecting to Data Communications Equipment (DCE) or Data Terminal Equipment (DTE) systems
- Transmit/Receive formats (bit width) supported:
  1.63µs (Transmit & Receive), 3/16 bit time (Receive Only)
- Hardware UART Support:
  9.6 kbaud baud rate, 60 Byte Data Buffer Size (64 Byte Packet)
- Infrared Supported:
  - 9.6 kbaud baud rate, 64 Byte Packet Size (60 Data Bytes)
- Operates as Secondary Device
- Wide Operating Voltage: 2.0V to 5.5V
- Automatic Low Power mode:
  < 23µA (max.) @ 2.0V, when no IR activity present (PHACT = L)
- Footprint Compatibility with MCP2140

CMOS Technology

- Low power, high-speed CMOS technology
- Low voltage operation
- Industrial temperature range
- Low power consumption:
  - < 407µA (max.) @ 2.0V, 3.6864 MHz

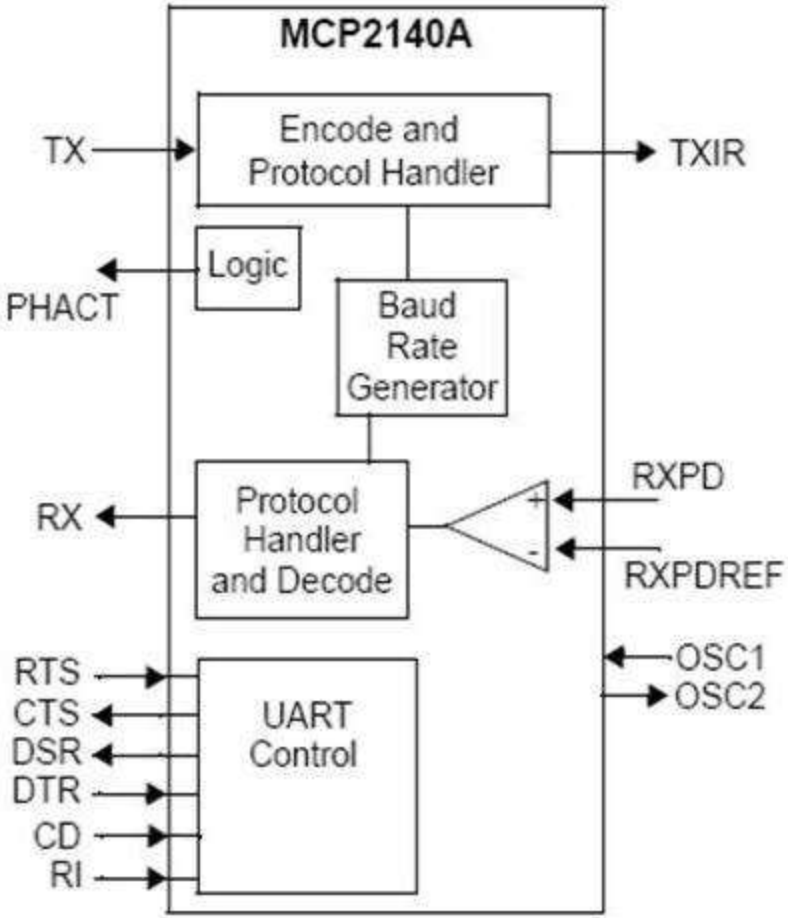

<< BACK

MCP2150

Online Datasheet

Features:

- Implements the IrDA® standard including:
  - IrLAP, IrLMP, IAS, TinyTP, IrCOMM (9-wire “cooked” service class)
- Provides IrDA standard physical signal layer support including:
  - Bidirectional communication, CRC implementation
  - Data communication rates up to 115.2 kbaud
- Includes UART to IrDA standard encoder/decoder functionality: Easily interfaces with industry standard UARTs and infrared transceivers
- UART interface for connecting to Data Terminal Equipment (DTE) systems
- Transmit/Receive formats (bit width) supported: 1.63µs
- Hardware baud rate selection for UART:
  9.6 kbaud, 19.2 kbaud, 57.6 kbaud, 115.2 kbaud
- Infrared baud rates supported:
  9.6 kbaud, 19.2 kbaud, 38.4 kbaud, 57.6 kbaud, 115.2 kbaud
- 64 Byte Data Packet Size
- Programmable Device ID String
- Operates as Secondary Device

CMOS Technology

- Low power, high-speed CMOS technology
- Fully static design
- Low voltage operation
- Industrial temperature range
- Low power consumption
  < 1mA @ 3.3 V, 11.0592MHz (typ.), 3µA (typ.) @ 5.0V when disabled

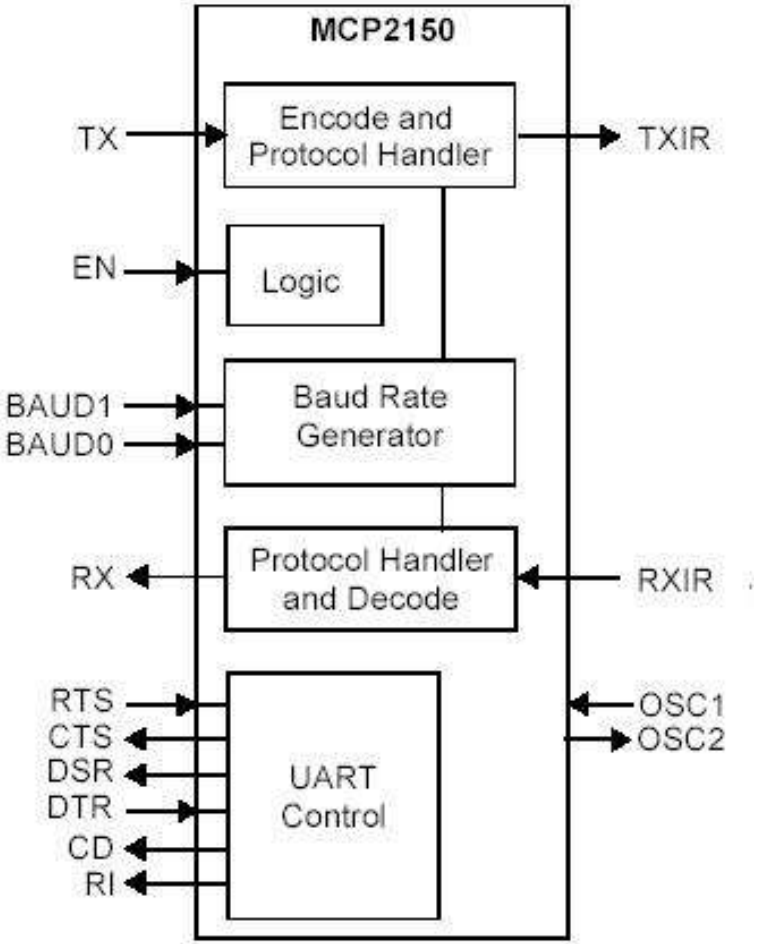

MCP2155 >>

<< BACK

MCP2155

Online Datasheet

Features:

- Implements the IrDA® standard including:
  - IrLAP, IrLMP, IAS, TinyTP, IrCOMM (9-wire “cooked” service class)
- Provides IrDA standard physical signal layer support including:
  - Bidirectional communication, CRC implementation
  - Data communication rates up to 115.2 kbaud
- Includes UART to IrDA standard encoder/decoder functionality: Easily interfaces with industry standard UARTs and infrared transceivers
- UART interface for Data Terminal Equipment (DTE) systems
- Transmit/Receive formats (bit width) supported: 1.63µs
- Hardware baud rate selection for UART:
  - 9.6 kbaud, 19.2 kbaud, 57.6 kbaud, 115.2 kbaud,
- Infrared baud rates supported:
  - 9.6 kbaud, 19.2 kbaud, 38.4 kbaud, 57.6 kbaud, 115.2 kbaud
- 64 Byte Data Packet Size
- Programmable Device ID String
- Operates as Secondary Device

CMOS Technology

- Low power, high-speed CMOS technology
- Fully static design
- Low voltage operation
- Industrial temperature range
- Low power consumption
  < 1mA @ 3.3V, 11.0592MHz (typ.), 3µA (typ.) @ 5.0V when disabled

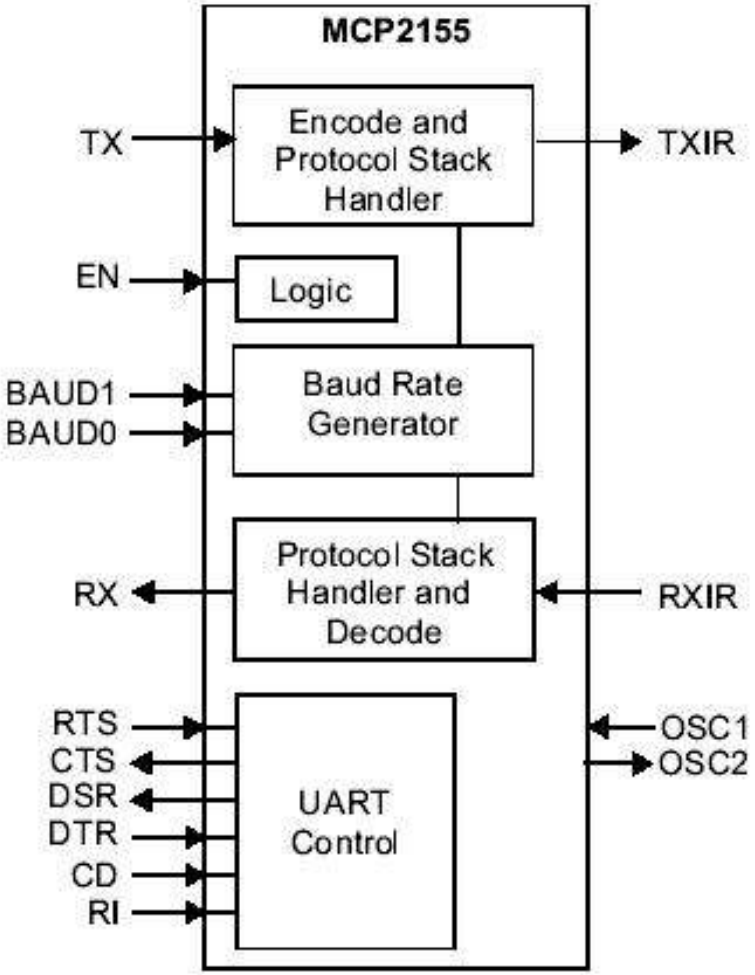

MCP2150 >>

<< BACK

MCP1525/41

Online Datasheet

Features:

- Precision Voltage Reference
- Output Voltages of 2.5V and 4.096V
- Initial Accuracy of ±1% (max.)
- Temperature Drift: ±50ppm/°C (max.)
- Output Current Drive: ±2mA
- Operating Current: 100µA @ 25°C (max.)
- Small SOT23-3 and TO-92 Packages
- Industrial Temperature Range: -40°C to +85°C

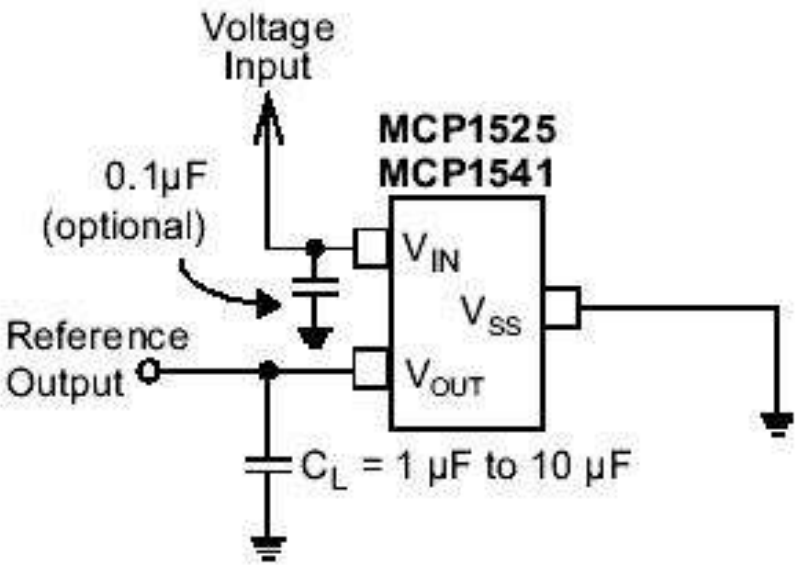

<< BACK

MCP1501

Online Datasheet

Features:

- Maximum Temperature Coefficient: 50 ppm/°C from -40°C to +125°C
- Initial Accuracy: 0.10%
- Operating Temperature Range: -40 to +125°C
- Low Typical Operating Current: 140µA
- Line Regulation: 50 ppm/V maximum
- Load Regulation: 40 ppm/mA maximum
- 8 Voltage variants available:
  1.024V, 1.250V, 1.800V, 2.048V, 2.500V, 3.000V, 3.300V, 4.096V
- Output Noise (0.1 Hz to 10 Hz): < 20 µVP-P
- Packages: 8L 2x2 WDN, 6L SOT-23, 8L SOIC

BLOCK DIAGRAM

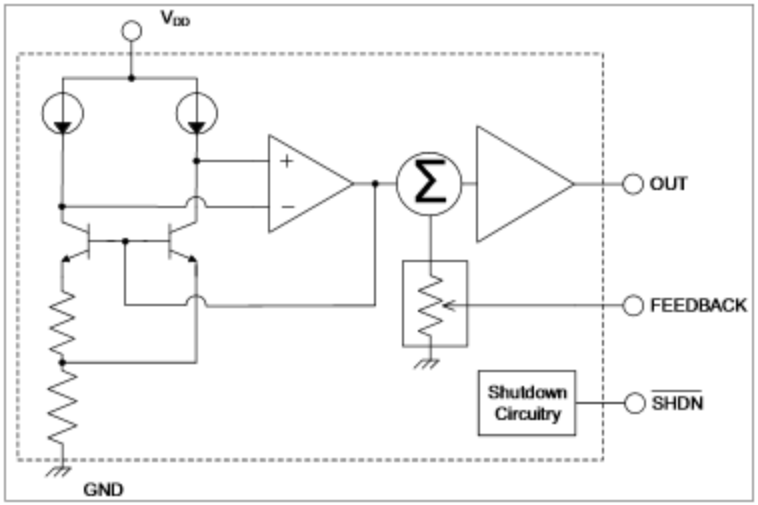

6-Lead SOT-23

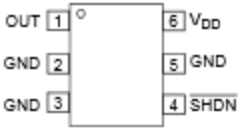

8-Lead SOIC

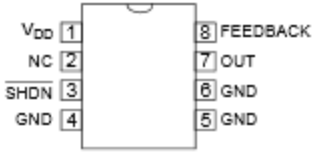

2x2 WDFN*

<< BACK

MCP2021A/2A

Online Datasheet

Features:

- The MCP2021A/2A is compliant with:
  - LIN Bus Specifications Version 1.3, and 2.x.
  - SAE J2602-2
- Support Baud Rates up to 20 kBaud
- 43V Load Dump Protected
- Maximum Continuous Input Voltage of 30V
- Wide LIN Compliant Supply Voltage, 6.0 - 18.0V
- Interface to PIC® EUSART and Standard USARTs
- Wake-up on LIN Bus Activity or Local Wake Input
- LIN Bus Pin
- TXD and LIN Bus Dominant Time-out Function
- Two Low-Power Modes
  - TRANSMITTER OFF Mode: 90 µA (typical)
  - POWER DOWN Mode: 4.5µA (typical)
- Output Indicating Internal RESET State (POR or SLEEP Wake)
- MCP2021A/2A On-chip Voltage Regulator
  - Output Voltage of 5.0V or 3.3V ,70 mA
- Automatic Thermal Shutdown
- High EMI, Low EME (Electromagnetic Emission)
- Robust ESD Performance: ±15 kV for LBUS and VBB pin (IEC61000-4-2)
- Transient Protection for LBUS and VBB Pins in Automotive Environment (ISO7637)
- Meets Stringent Automotive Design Requirements Including “OEM Hardware Requirements for LIN, CAN and FlexRay Interfaces in Automotive Applications”, Version 1.2, March 2011
- Extended Temperature Range: -40 to +125°C
- 8-lead 4x4 mm DFN, PDIP, SOIC, TSSOP

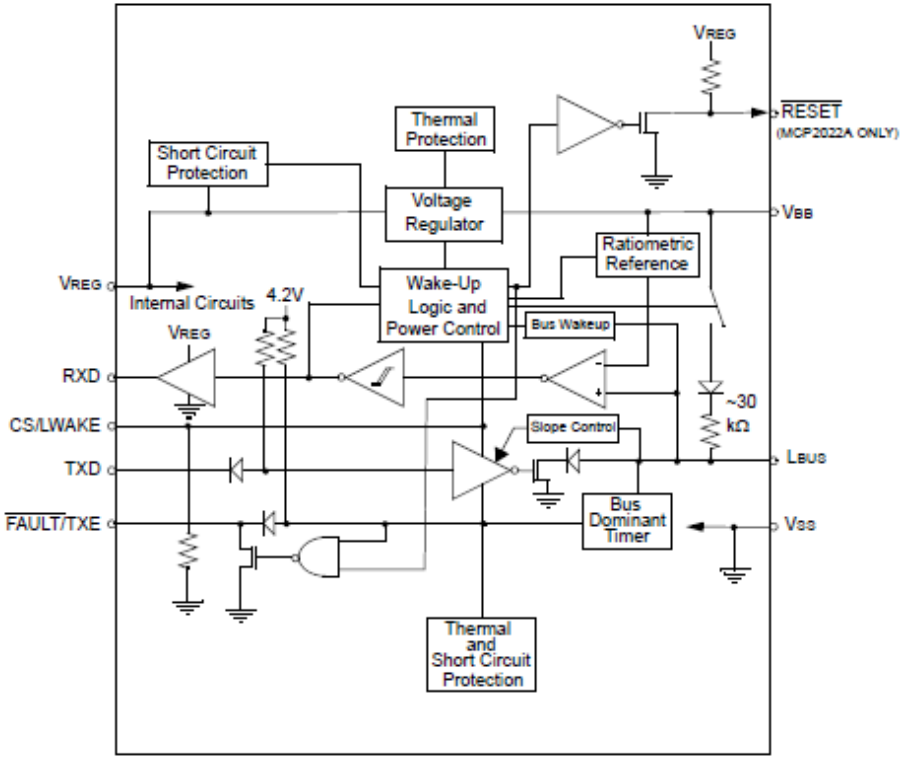

<< BACK

MCP2025

Online Datasheet

Features:

- The MCP2025 is compliant with:
  - LIN Bus Specifications Version 1.3, and 2.x
  - SAE J2602-2
- Supports Baud Rates up to 20 kBaud
- 43V Load Dump Protected
- Maximum Continuous Input Voltage of 30V
- Wide LIN Compliant Supply Voltage: 6.0-18.0V
- Interface to PIC® EUSART and Standard USARTs
- Wake-up on LIN Bus Activity or Local Wake Input
- LIN Bus Pin
- TXD and LIN Bus Dominant Time-out Function
- Two Low-power Modes
  - -TRANSMITTER-OFF: 90 µA (typical)
  - - POWER-DOWN mode: 4.5 µA (typical)
- MCP2025 On-chip Voltage Regulator
  - - Output Voltage of 5.0V or 3.3V, 70 mA
- Automatic Thermal Shutdown
- High EMI, Low EME (Electromagnetic Emission)
- Robust ESD Performance: ±15 kV for LBUS and VBB Pin (IEC61000-4-2)
- Transient Protection for LBUS and VBB pins in Automotive Environment (ISO7637)
- Meets stringent automotive design requirements including “OEM Hardware Requirements for LIN, CAN and FlexRay Interfaces in Automotive Applications”, Version 1.2, March 2011
- Extended Temperature Range: -40 to +125°C
- 8-lead 4x4 mm DFN, PDIP, and SOIC

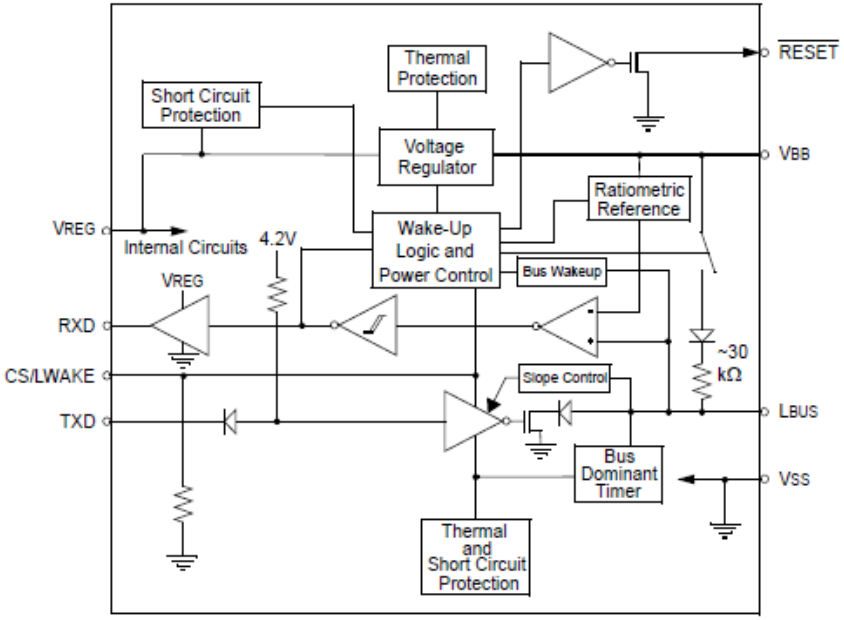

<< BACK

MCP2050

Online Datasheet

Features:

- The MCP2050 is compliant with:
  - LIN Bus Specifications Version 1.3, and 2.x
  - SAE J2602-2
- Support Baud Rates Up to 20 kBaud
- 43V Load Dump Protected
- Maximum Continuous Input Voltage of 30V
- Wide LIN Compliant Supply Voltage, 6.0-18.0V
- Interface to PIC® EUSART and Standard USARTs
- Wake-up on LIN Bus Activity or Local Wake Input
- LIN Bus Pin
- TXD and LIN Bus Dominant Time-out Function
- Two Low-power Modes
  - TRANSMITTER OFF Mode: 90 µA (typical)
  - POWER DOWN Mode: 4.5 µA (typical)
- Output Indicating Internal RESET State (POR or SLEEP Wake)
- MCP2050 On-chip Voltage Regulator
- Output Voltage of 5.0V or 3.3V, 70 mA
- Programmable Windowed Watchdog Timer (WWDT)
- Ratiometric Output of VBAT Voltage Scaled to VREG
- Automatic Thermal Shutdown
- Robust ESD Performance: ±15 kV for LBUS and VBB pin (IEC61000-4-2)
- Transient Protection for LBUS and VBB Pins in Automotive Environment (ISO7637)
- Meets Stringent Automotive Design Requirements
- Extended Temperature Range: -40 to +125°C

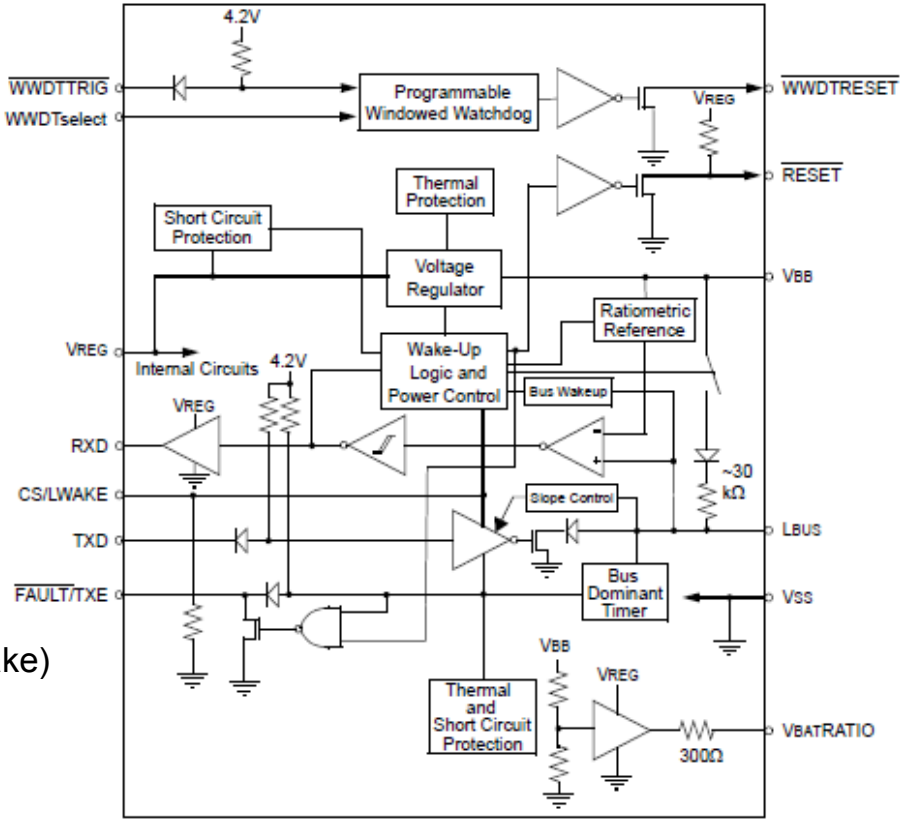

<< BACK

ATA663211

Online Datasheet

Features:

- Supply voltage up to 40V
- Operating voltage VS = 5V to 28V
- Very low supply current
- Sleep mode: typically 9µA
- Fail-safe mode: typically 80µA
- Normal mode: typically 250µA
- Fully compatible with 3.3V and 5V devices
- According to LIN 2.0, 2.1, 2.2, 2.2A and SAEJ2602-2
- Wake-up capability via LIN bus (100µs dominant)
- External wake-up via WKin pin (100µs low level)
- INH output
- Wake-up source recognition
- TXD time-out timer
- Bus pin is over-temperature and short-circuit protected vs. GND and battery
- Advanced EMC and ESD performance
- Fulfills the OEM Hardware Requirements for LIN Interfaces in Automotive Applications
- Interference and damage protection according to ISO7637
- Qualified according to AEC-Q100

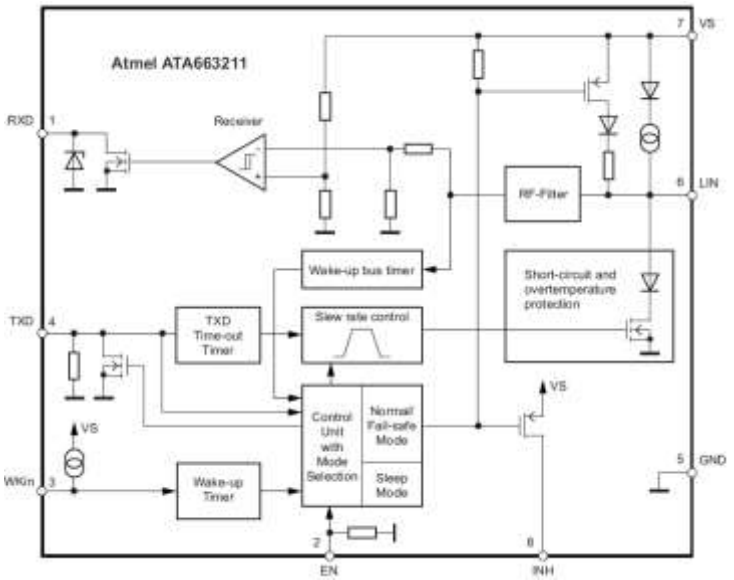

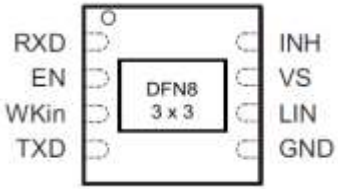

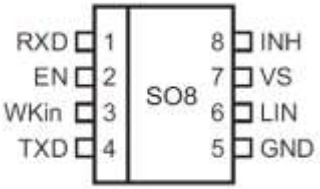

DFN8 package with wettable flanks

<< BACK

ATA6670

Dual LIN Transceiver

Online Datasheet

Features:

- Operating range from 5V to 27V
- Baud rate up to 20Kbaud
- According to LIN specification 2.0, 2.1 and SAEJ2602-2
- Fully compatible with 3.3V and 5V devices
- TXD dominant timeout timer
- Normal and sleep mode
- Wake-up capability via LIN bus (90µs dominant)
- Very low standby current during sleep mode (10µA)
- Bus pin is over-temperature and short-circuit protected versus GND and battery
- LIN input current < 2µA if VBAT Is disconnected
- Over-temperature protection
- High EMC level
- Interference and damage protection according to ISO/CD 7637
- Fulfills the OEM Hardware Requirements for LIN Interfaces in automotive applications
- Transceiver 2: additional INH high side switch output and high voltage WAKE input
- Qualified according to AEC-Q100

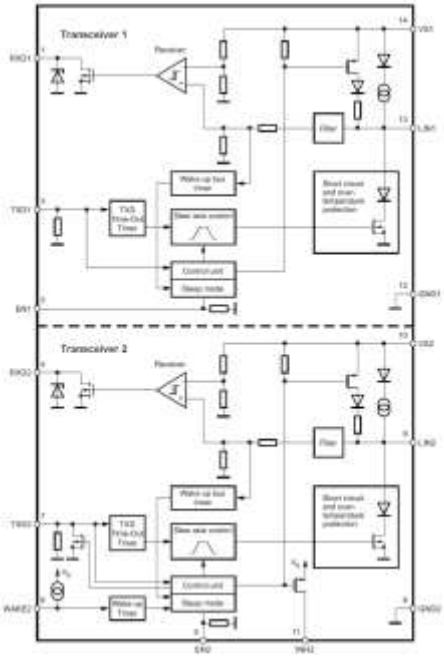

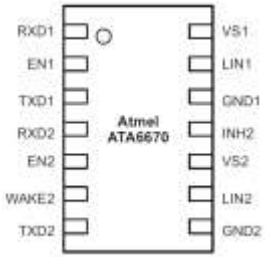

DFN14 package with wettable flanks

<< BACK

ATA663201

LIN SBC compatible LDO

Online Datasheet

Features:

- Footprint compatible with ATA663231 LIN SBC
- Supply voltage up to 40V
- Operating voltage VS = 5V to 28V
- Very low current consumption at low supply voltages (2V < VS < 5.5V): typically 130µA
- Linear low-drop voltage regulator, 85mA current capability:
  - MLC (multi-layer ceramic) capacitor with 0Ω ESR
  - ATA663201: VCC = 3.3V ±2%
  - VCC under-voltage detection with open drain reset output (NRES, 4ms reset time)
- Voltage regulator is short-circuit and over-temperature protected
- Advanced EMC and ESD performance
- Interference and damage protection according to ISO7637
- Qualified according to AEC-Q100

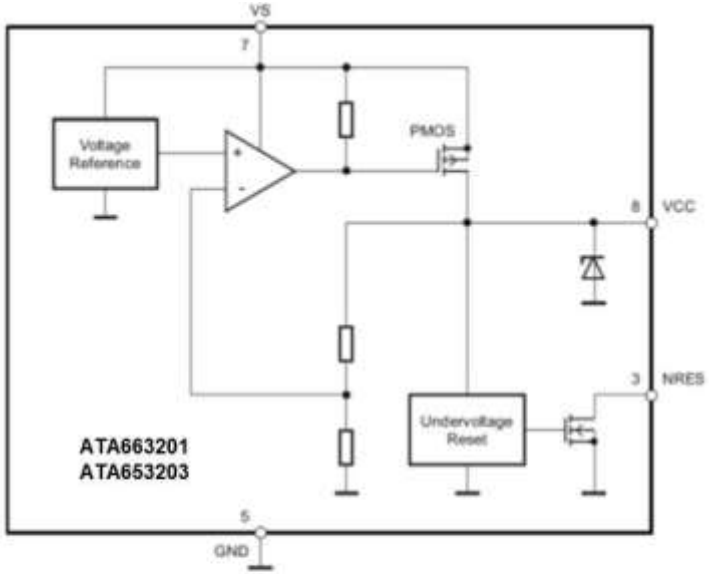

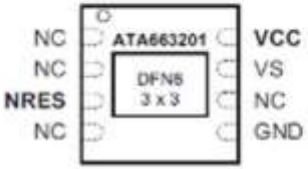

DFN8 package with wettable flanks

<< BACK

ATA663203

LIN SBC compatible LDO

Online Datasheet

Features:

- Footprint compatible with ATA663254 LIN SBC
- Supply voltage up to 40V
- Operating voltage VS = 5V to 28V
- Very low current consumption at low supply voltages (2V < VS < 5.5V): typically 130µA
- Linear low-drop voltage regulator, 85mA current capability:
  - MLC (multi-layer ceramic) capacitor with 0Ω ESR
  - ATA663203: VCC = 5.0V ±2%
  - VCC under-voltage detection with open drain reset output (NRES, 4ms reset time)
- Voltage regulator is short-circuit and over-temperature protected
- Advanced EMC and ESD performance
- Interference and damage protection according to ISO7637
- Qualified according to AEC-Q100

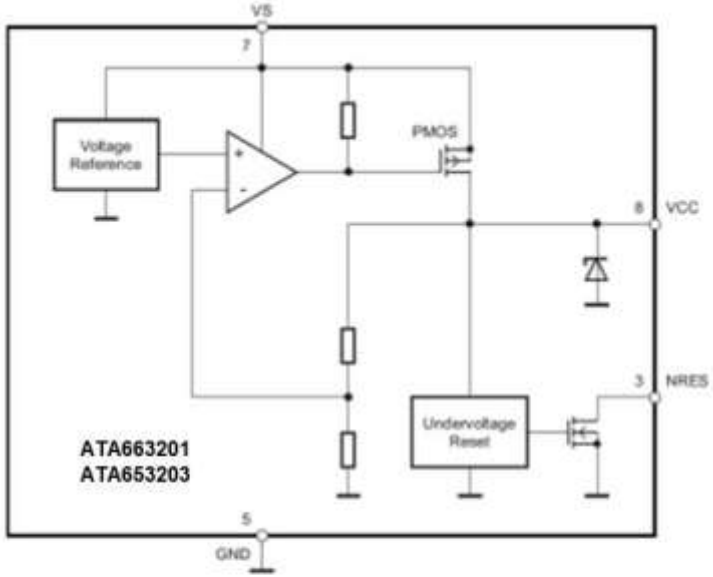

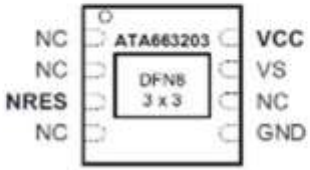

DFN8 package with wettable flanks

<< BACK

ATA6622C/24C/26C

Online Datasheet

Features:

- Supply voltage up to 40V
- Operating voltage VS = 5V to 27V
- Typically 10µA supply current during Sleep Mode
- Typically 57µA supply current in Silent Mode
- Linear low-drop voltage regulator, 85mA current capability:
  - ATA6622C VCC = 3.3V ±2%
  - ATA6624C VCC = 5.0V ±2%
  - ATA6626C VCC = 5.0V ±2%, TXD time-out timer disabled
  - On in Normal, Fail-safe, and Silent Mode
  - Off in Sleep Mode VCC
  - VCC- under-voltage detection (4ms reset time) and watchdog reset logical combined at open drain output NES
- Boosting the voltage regulator possible with an external NPN transistor
- LIN physical layer according to LIN 2.0, 2.1 and SAEJ2602-2
- Wake-up capability via LIN-bus, wake pin, or KI_15 pin
- INH output to control an external voltage regulator or to switch off the master pull up resistor
- TXD time-out timer; ATA6626C: TXD time-out timer is disabled
- Bus pin is over-temperature and short circuit protected versus GND and battery
- Adjustable watchdog time via external resistor
- Negative trigger input for the window watchdog
- Advanced EMC and ESD performance
- Fulfills the OEM Hardware Requirements for LIN Interfaces in automotive Applications”
- Interference and damage protection according to ISO7637
- Qualified according to AEC-Q100

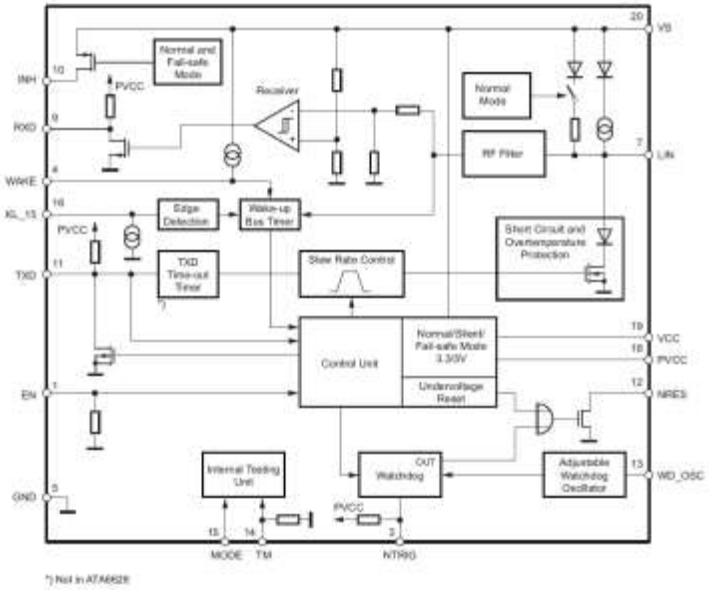

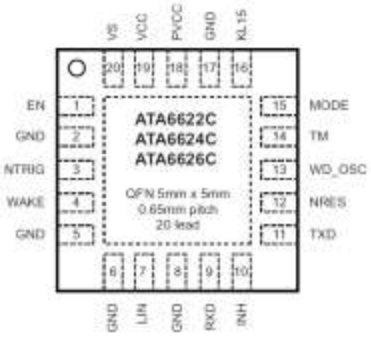

<< BACK

ATA663231/54

LIN SBC with LDO

Online Datasheet

Features:

- Supply voltage up to 40V
- Operating voltage VS = 5V to 28V
- Typically 9µA supply current during sleep mode
- Typically 47µA supply current in silent mode
- Very low current consumption at low supply voltages (2V < VS < 5.5V): typically 130µA
- Linear low-drop voltage regulator, 85mA current capability:
  - MLC (multi-layer ceramic) capacitor with 0Ω ESR
  - Normal, fail-safe, and silent mode
    - ATA663254: VCC = 5.0V ±2%
    - ATA663231: VCC = 3.3V ±2%
  - Sleep mode: VCC is switched off
  - VCC under-voltage detection with open drain reset output (NRES, 4ms reset time)
- Voltage regulator is short-circuit and over-temperature protected
- LIN physical layer according to LIN 2.0, 2.1, 2.2, 2.2A and SAEJ2602-2
- Wake-up capability via LIN bus (100µs dominant)
- Wake-up source recognition
- TXD time-out timer
- Bus pin is over-temperature and short-circuit protected versus GND and battery
- Advanced EMC and ESD performance
- Fulfills the OEM Hardware Requirements for LIN Interfaces in Automotive Applications
- Interference and damage protection according to ISO7637
- Qualified according to AEC-Q100

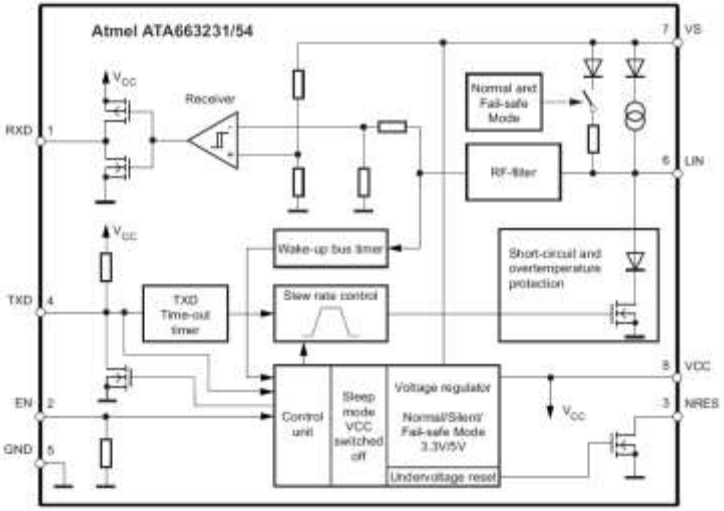

DFN package with wettable flanks

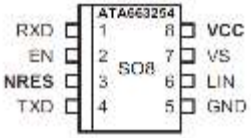

<< BACK

ATA663232/55

LIN SBC with LDO & HV Wake Input

Online Datasheet

Features:

- Supply voltage up to 40V
- Operating voltage VS = 5V to 28V
- Typically 9µA supply current during sleep mode
- Typically 47µA supply current in silent mode
- Very low current consumption at low supply voltages (2V < VS < 5.5V): typically 130µA
- Linear low-drop voltage regulator, 85mA current capability:
  - MLC (multi-layer ceramic) capacitor with 0Ω ESR
  - Normal, fail-safe, and silent mode
    - ATA663255: VCC = 5.0V ±2%
    - ATA663232: VCC = 3.3V ±2%
  - Sleep mode: VCC is switched off
  - Voltage regulator is short-circuit and over-temperature protected
- LIN physical layer according to LIN 2.0, 2.1, 2.2, 2.2A and SAEJ2602-2
- Wake-up capability via LIN bus (100µs dominant) and Wkin pin (100µs low level)
- Wake-up source recognition
- TXD time-out timer
- Bus pin is over-temperature and short-circuit protected versus GND and battery
- Advanced EMC and ESD performance
- Fulfills the OEM Hardware Requirements for LIN Interfaces in Automotive Applications
- Interference and damage protection according to ISO7637
- Qualified according to AEC-Q100

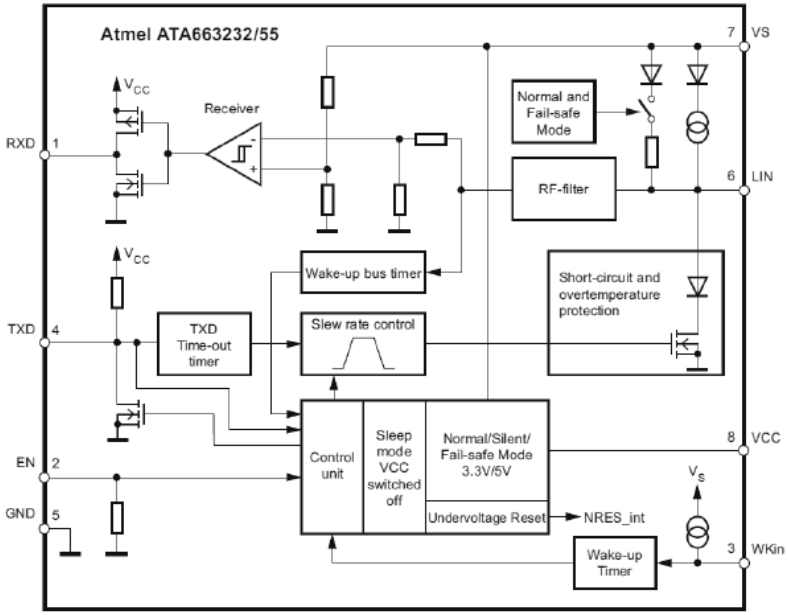

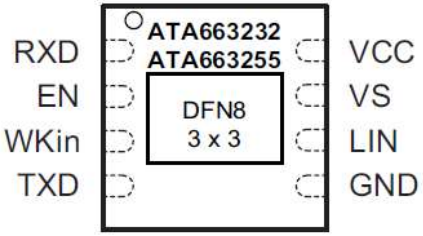

DFN package with wettable flanks

<< BACK

ATA663431/ATA663454

LIN SBC with Watchdog

Online Datasheet

Features:

- Supply voltage up to 40V
- Operating voltage VVS = 5V to 28V
  - Supply current
  - Sleep mode: typically 10µA
  - Silent mode: typically 47µA
  - Very low current consumption at low supply voltages (2V < VVS < 5.5V): typically 150µA
- LDO voltage regulator, 85mA current capability:
  - MLC (multi-layer ceramic) capacitor with 0Ω ESR
  - Normal, fail-safe, and silent mode
  - Atmel ATA663454: VCC = 5.0V ±2%
  - Atmel ATA663431: VCC = 3.3V ±2%
  - Sleep mode: VCC is switched off
- VCC under-voltage detection with reset output (NRES, 4ms reset time)
- Voltage regulator is short-circuit and over-temperature protected
- Adjustable watchdog time via external resistor
- Limp Home watchdog failure output
- Physical layer according to LIN 2.0, 2.1, 2.2, 2.2A and SAEJ2602-2
- Bus pin is over-temperature and short-circuit protected versus GND and battery
- High-side switch
- Wake-up capability via LIN Bus, WKin pin and CL 15 pin
- Wake-up source recognition
- TXD time-out timer
- Advanced EMC and ESD performance
- Fulfills the OEM Hardware Requirements for LIN Interfaces in Automotive Applications
- Interference and damage protection according to ISO7637
- Qualified according to AEC-Q100

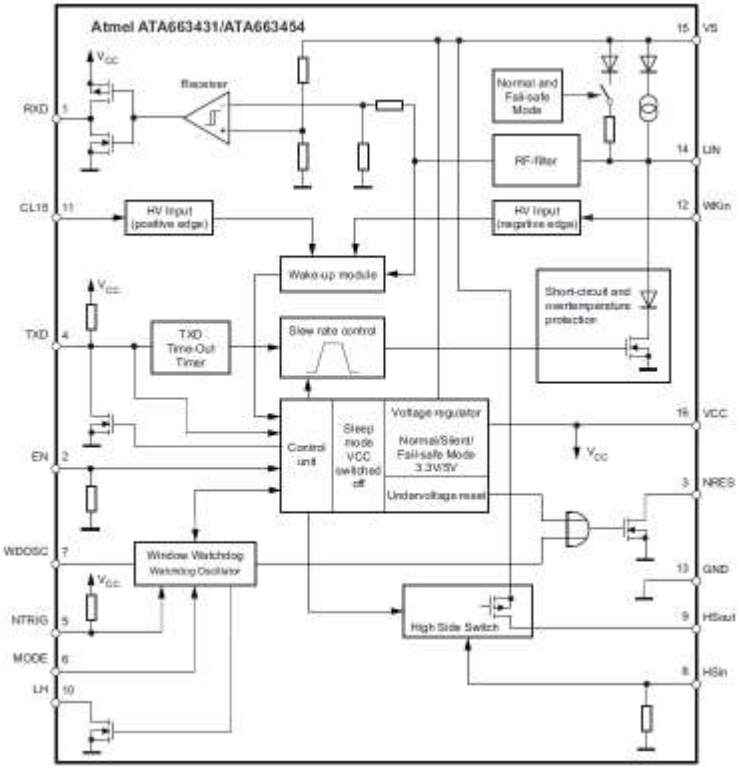

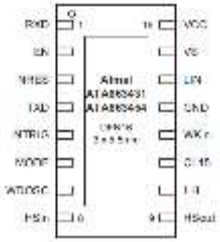

DFN package with wettable flanks

<< BACK

ATA6625-GxQW

LIN SBC with LDO

Online Datasheet

Features:

- Supply voltage up to 40V
- Operating voltage VS = 5V to 28V
- Typically 9µA supply current during sleep mode
- Typically 47µA Supply current in silent mode
- Very low current consumption at low supply voltages (2V < VS < 5.5V): Typically 130µA
- 5.0V ±2% linear low-drop voltage regulator, 85mA current capability:
    - MLC (multi-layer ceramic) capacitor with 0Ω ESR
    - Normal, fail-safe, and silent mode – LDO is ON:
    - Sleep mode – LDO is switched off
    - VCC under-voltage detection with reset open drain output NRES (4ms reset time)
    - Voltage regulator is short-circuit and over-temperature protected
- LIN physical layer according to LIN 2.0, 2.1, 2.2, 2.2A and SAEJ2602-2
- Wake-up capability via LIN bus (100µs dominant)
- TXD time-out timer
- Bus pin is over-temperature and short-circuit protected versus GND and battery
- Advanced EMC and ESD performance
- Fulfills the OEM Hardware Requirements for LIN Interfaces in Automotive Applications
- Interference and damage protection according to ISO7637
- Qualified according to AEC-Q100
- Package: SO8
- Successor of ATA6625C

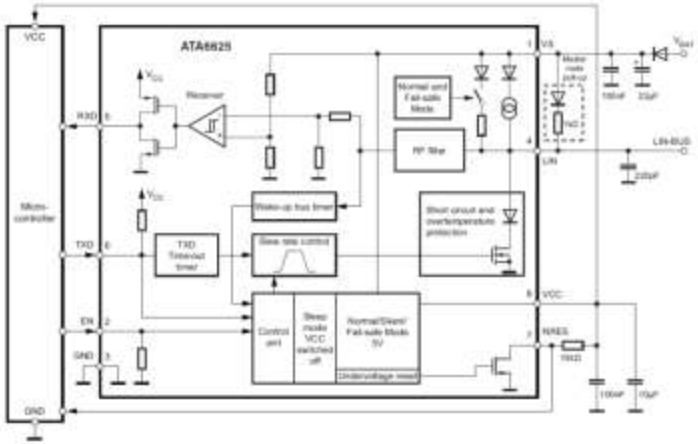

SO8

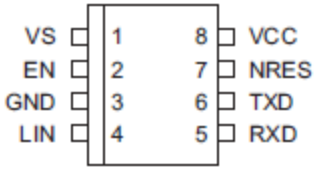

<< BACK

ATA6623C/25C

Recommend ATA6625-GxQW for new 5V designs
ATA6623C for 3V designs

Online Datasheet

Features:

- Supply voltage up to 40V
- Operating voltage VS = 5V to 27V
- Typically 10µA supply current during sleep mode
- Typically 57µA Supply current in silent mode
- Linear low-drop voltage regulator, 85mA current capability:
  - Normal, fail-safe, and silent mode
    - ATA6623C: VCC = 3.3V ±2%
    - ATA6625C: VCC = 5.0V ±2%
  - Sleep mode: VCC is switched off
  - VCC under-voltage detection with reset open drain output NRES (4ms reset time)
  - Voltage regulator is short-circuit and over-temperature protected
- LIN physical layer according to LIN 2.0, 2.1 and SAEJ2602-2
- Wake-up capability via LIN bus (90µs dominant)
- TXD time-out timer
- Bus pin is over-temperature and short-circuit protected versus GND and battery
- Advanced EMC and ESD performance
- Fulfills the OEM Hardware Requirements for LIN Interfaces in Automotive Applications
- Interference and damage protection according to ISO7637
- Qualified according to AEC-Q100
- Package: SO8

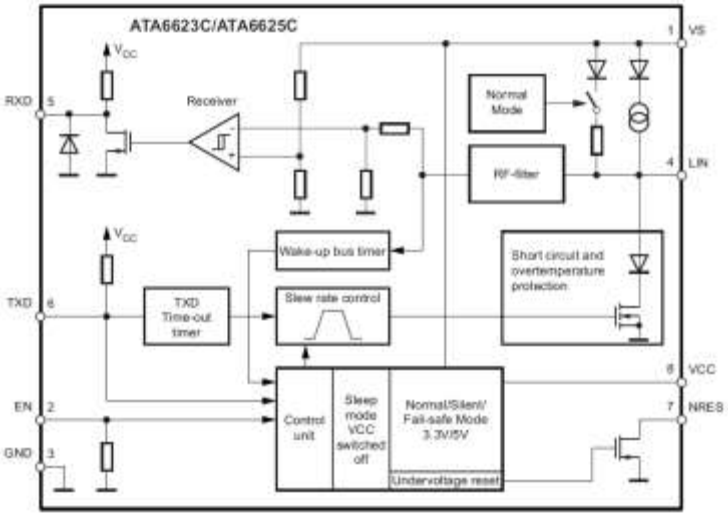

SO8

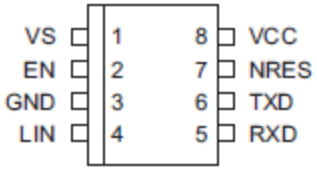

ATA6625-GxQW

<< BACK

ATA663331/ATA663354

LIN SBC with 2 Relay Drivers

Online Datasheet

Applications:

- Target application: Motor control via relays like **Window Lifter** Trunk opener, Sunroof, seat adjust

Features:

- Supply voltage up to 40V
- Operating voltage VVS = 5V to 28V
- Supply current
  - Sleep mode: typically 10µA
  - Silent mode: typically 47µA
  - Very low current consumption at low supply voltages (2V < VVS < 5.5V): typically 130µA
- LDO voltage regulator, 85mA current capability:
  - MLC (multi-layer ceramic) capacitor with 0Ω ESR
  - Normal, fail-safe, and silent mode
    - Atmel ATA663354: VVCC = 5.0V ±2%
    - Atmel ATA663331: VVCC = 3.3V ±2%
  - Sleep mode: VCC is switched off
- VCC under-voltage detection with open drain reset output (NRES, 4ms reset time)
- Voltage regulator is short-circuit and over-temperature protected
- Physical layer according to LIN 2.0, 2.1, 2.2, 2.2A and SAEJ2602-2
- Bus pin is over-temp. and short-circuit protected versus GND and battery
- Two low-side protected switches and one high-side protected switch
- Wake-up capability via LIN bus (100µs dominant) and WKin pin
- Wake-up source recognition
- TXD time-out timer
- Fulfills the OEM Hardware Requirements for LIN Interfaces in Automotive Applications
- Interference/damage protection according to ISO7637
- Qualified according to AEC-Q100

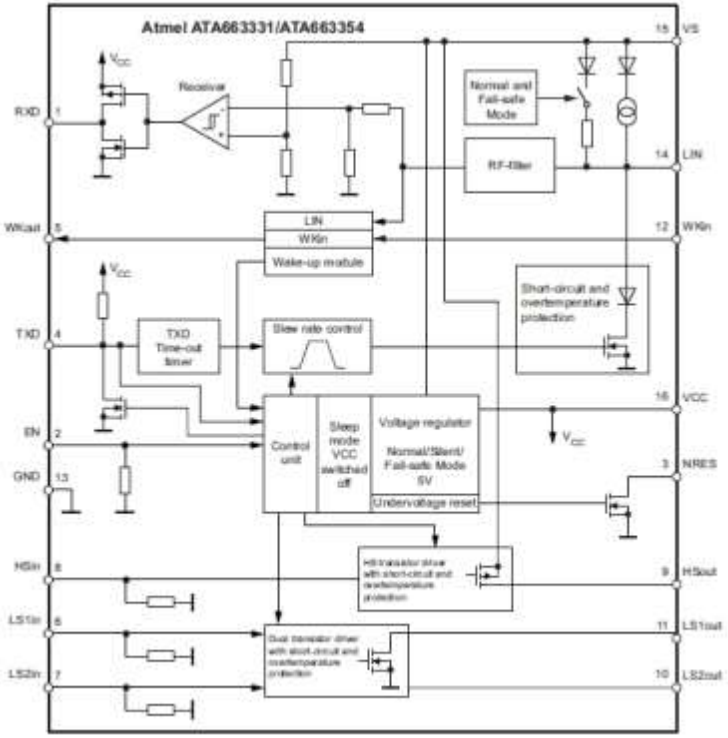

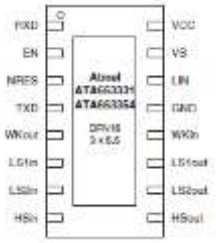

DFN package with wettable flanks

<< BACK

ATA6612C/ATA6613C

Online Datasheet

Features:

- Single package microcontroller + LIN Transceiver
- Integrated 5V voltage regulator
- Very low current consumption in sleep mode
- 8Kbytes/16Kbytes flash memory
- 512bytes EEPROM
- 1Kbyte internal SRAM
- Two 8-bit TC/ One 16-bit TC
- 8-channel 10 bit ADC
- Master/Slave SPI interface
- 23 programmable I/O lines
- LIN physical layer according to LIN 2.0, 2.1, 2.2 specification and SAEJ2602-2
- Wake-up capability via LIN-bus, wake pin, or Kl_15 pin
- INH output to control an external voltage regulator or o switch off the master pull Up resistor
- TXD time-out timer
- Bus pin is over temperature and short circuit protected versus GND and battery
- Qualified according to AEC-Q100

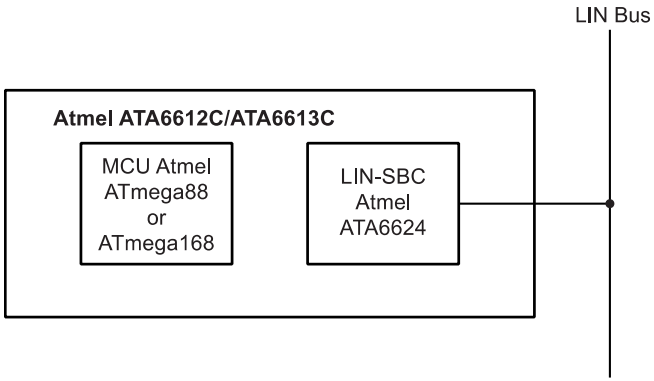

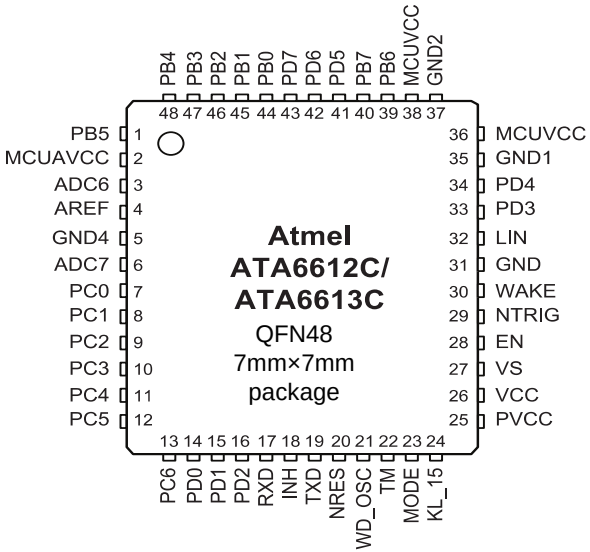

<< BACK

ATA6614Q

Online Datasheet

Features:

- Single package microcontroller + LIN Transceiver
- Integrated 5V voltage regulator
- Very low current consumption in sleep mode
- 32Kbytes flash memory
- 1Kbytes EEPROM
- 2Kbyte internal SRAM
- Two 8-bit TC/ One 16-bit TC
- 8-channel 10 bit ADC
- Master/Slave SPI interface
- 23 programmable I/O lines
- LIN physical layer according to LIN 2.0, 2.1, 2.2 specification and SAEJ2602-2
- Wake-up capability via LIN-bus, wake pin, or Kl_15 pin
- INH output to control an external voltage regulator or to switch off the master pull Up resistor
- TXD time-out timer
- Bus pin is over temperature and short circuit protected versus GND and battery
- Qualified according to AEC-Q100

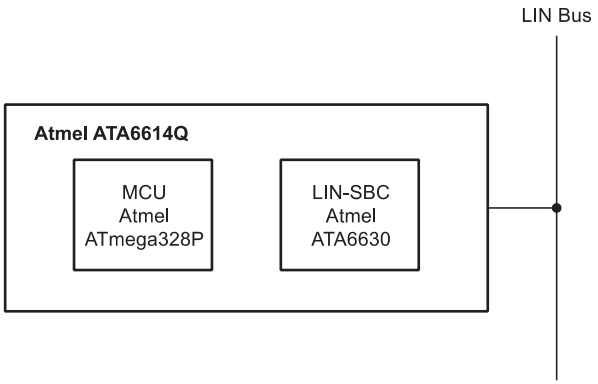

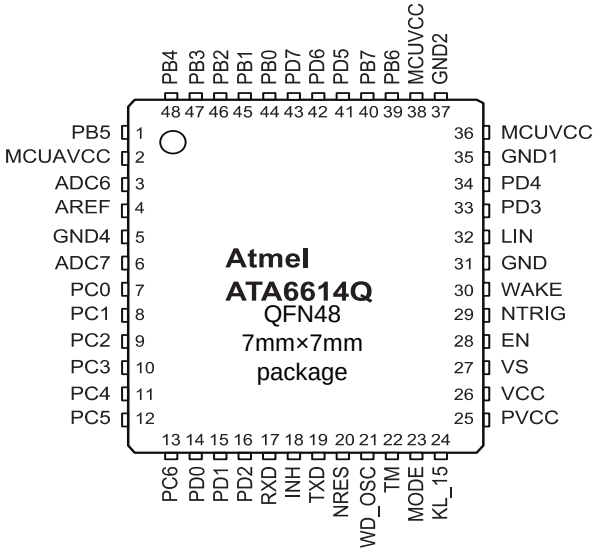

<< BACK

ATA6616C/ATA6617C

Online Datasheet

Features:

- Single package microcontroller + LIN SBC
- Integrated 5V voltage regulator
- Very low current consumption in sleep mode
- 8Kbytes/16Kbytes flash memory
- 512bytes EEPROM
- 512bytes internal SRAM
- One 8-bit TC/ One 16-bit TC
- 11-channel 10 bit ADC
- Master/Slave SPI interface
- 16 programmable I/O lines
- LIN 2.1 and 1.3 controller or 8-bit UART
- LIN physical layer according to LIN 2.0, 2.1, 2.2 specification and SAEJ2602-2
- Wake-up capability via LIN-bus, wake pin, or Kl_15 pin
- INH output to control an external voltage regulator or to switch off the master pull Up resistor
- TXD time-out timer
- Bus pin is over temperature and short circuit protected versus GND and battery
- Qualified according to AEC-Q100

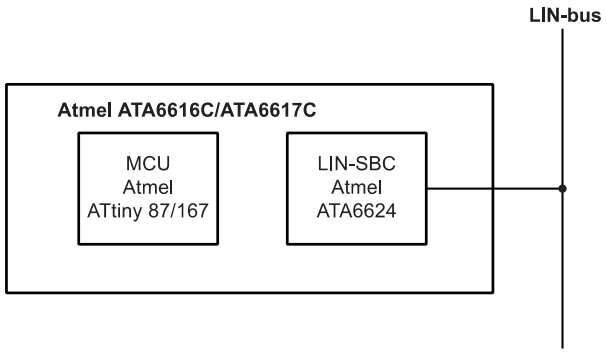

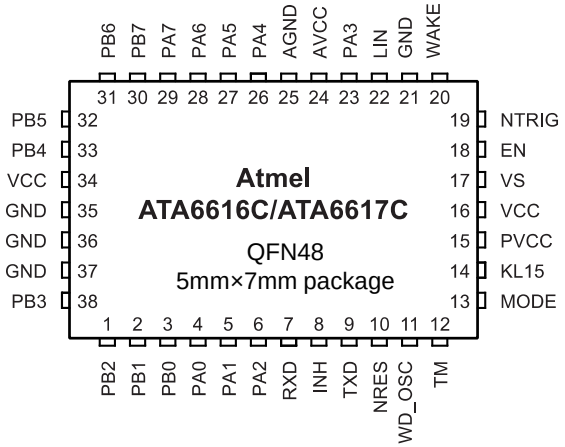

<< BACK

ATSAMHA1GxxA

Online Datasheet

Features:

- Single package CM0+ microcontroller + LIN SBC
- Integrated 3.3V voltage regulator
- 16/32/64Kbytes flash memory
- 512/1024/2048 bytes RWW-Dataflash
- 4/4/8K internal SRAM
- 4+1 16-bit TC (One for internal use only, no PWM)
- 3 16-bit TCC (Timer counter for control)
- 13-channel 12 bit ADC
- 5 SERCOM modules capable of LIN/SPI/USART/I2C
- 32 programmable I/O lines
- 9 Self capacitance touch channels
- 1 10-bit DAC
- 8 Channel DMA, Event system
- LIN physical layer according to LIN 2.0, 2.1, 2.2 specification and SAEJ2602-2
- Wake-up capability via LIN-bus
- TXD time-out timer
- Bus pin is over temperature and short circuit protected versus GND and battery
- Qualified according to AEC-Q100

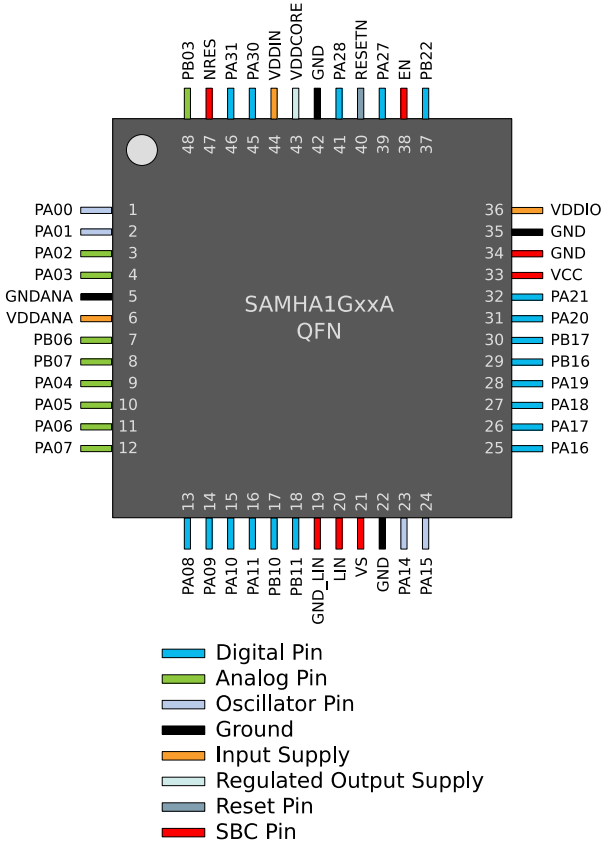

<< BACK

MCP2200

Online Datasheet

Features:

Universal Serial Bus (USB):
- Supports full-speed USB (12 Mb/s)
- Implements USB protocol composite device CDC device for communications, configuration and I/O control
- 128 byte buffer to handle data throughput at any UART baud rate:
- Fully configurable VID and PID assignments, and string descriptors
- Bus powered or self-powered
- USB 2.0 Compliant

USB Driver and Software Support:
- Uses standard Microsoft® Windows® drivers for Virtual Com Port (VCP)
- Configuration utility for initial configuration

Universal Asynchronous Receiver/Transmitter (UART):
- Responds to SET LINE CODING commands to dynamically change baud rates
- Supports baud rates: 300-1000k
- Hardware flow control
- UART signal polarity option

General Purpose Input/Output (GPIO) Pins: Eight GPIO pins

EEPROM: 256 bytes of user EEPROM

Other:
- USB activity LED outputs (TxLED and RxLED)
- SSPND output pin
- USBCFG output pin (indicates if requested current is allowed)
- Operating voltage: 3.0-5.5V
- Oscillator input: 12 MHz
- ESD protection > 4 kV HBM
- Industrial (I) Operating Temperature: -40°C to +85°C
- Available in 20-lead 5x5 QFN, SOIC, and SSOP Packages

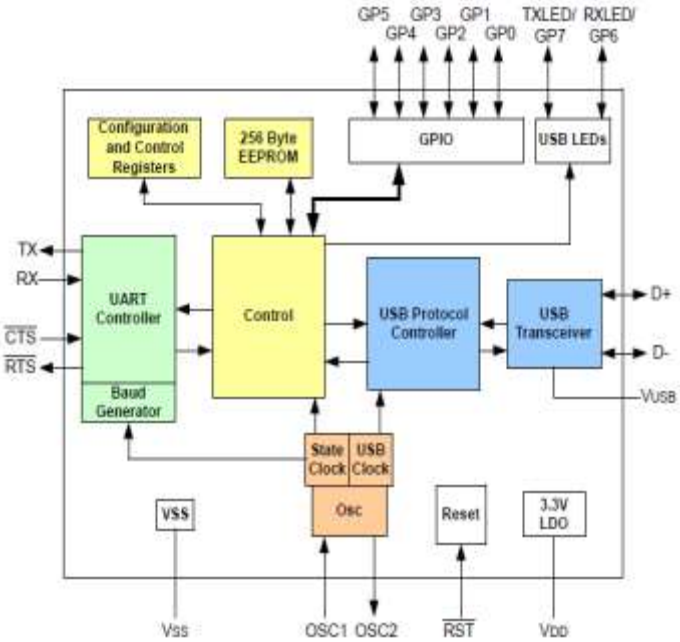

<< BACK

MCP2210

Online Datasheet

Features:

Universal Serial Bus (USB)
- Supports Full-Speed USB (12 Mb/s)
- Human Interface Device (HID) device
- 128-Byte Buffer to Handle Data Throughput:
- Fully Configurable VID, PID Assignments and String Descriptor (factory programming also available)
- Bus Powered or Self-Powered
- USB 2.0 Compliant

USB Driver and Software Support
- Uses Standard HID Drivers
- Configuration Utility for Device's Power-up Configuration
- Utility for USB-SPI Communication, GPIO Manipulation , Features Usage

SPI Master Peripheral
- Supports all Four SPI modes (Mode 0, 1, 2, 3)
- Bit Rates from 1500 bps up to 12 Mbps
- Configurable Delays for SPI Transactions:
- SPI Transactions Lengths of up to 65535 Bytes Long
- Up to 9 Chip Select lines – to be used in any combination

General Purpose Input/Output (GPIO) Pins: 8 GPIO pins

EEPROM: 256 Bytes of User EEPROM

Other
- USB Activity LED Output
- SSPND Output Pin (to signal USB Suspend state)
- USBCFG Output Pin
- Operating Voltage: 3.3-5.5V
- Oscillator Input: 12 MHz
- Available in 20-lead 5x5 QFN, SOIC, and SSOP Packages

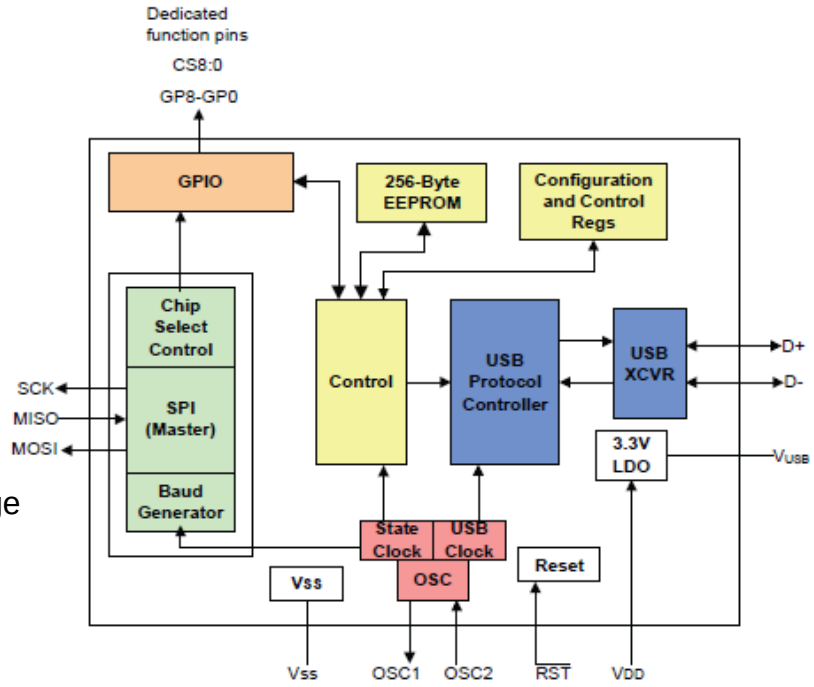

<< BACK

MCP2221

Online Datasheet

Features:

- Supports Full-Speed USB (12 Mb/s)
- Implements USB Protocol Composite Device:
  - Communication Device Class (CDC) for USB-UART Conversion
  - Human Interface Device (HID) for I2C™ Device Control and Configuration
- 128-byte Buffer enabling Flexible Data Throughput
  - 64-byte Transmit, 64-byte Receive
- 12MHz 0.25% Internal Oscillator
- Selectable clock output option
- Highly Configurable device and USB descriptors and assignments
- Bus-powered or Self-powered
- USB 2.0 Compliant: TID# 40001594
- Onboard ADC and DAC
- Low Pin Count Package Options

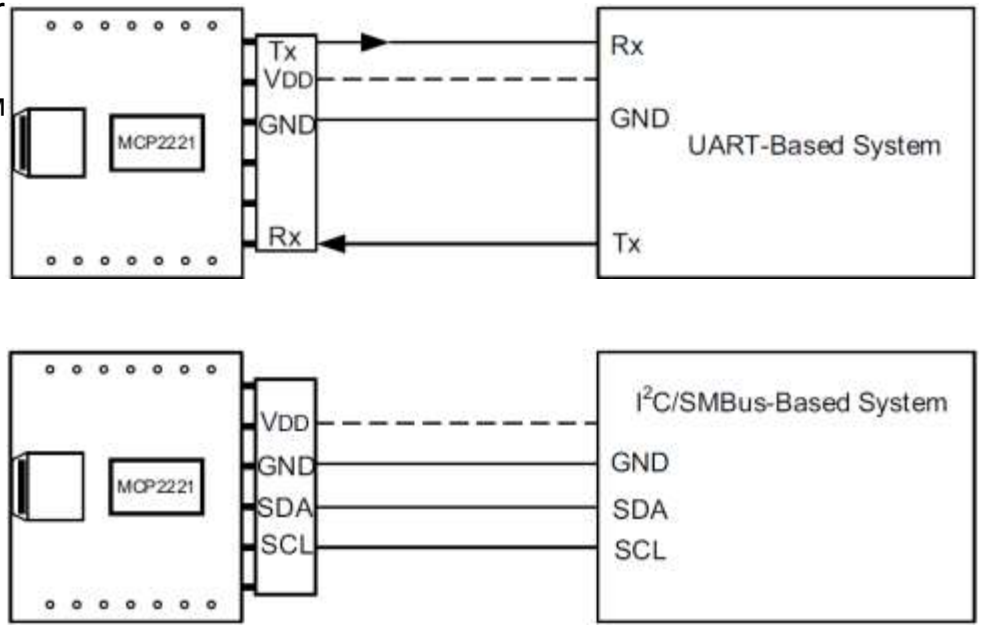

<< BACK

USB251xB 5th Gen USB2.0 Certified Hub

Online Datasheet

Features:

- Full Featured 5th generation USB 2.0
- 2 to 4 Ports
- Fully configurable via EPPROM, SMbus
- Supports Battery Charging USB BC 1.1
- PHYBoost, PortMap, PortSwap, MultiTRAK™ Technology
- Self & Bus Powered
- Overcurrent Protection Ganged and Individual Modes
- LED Drivers
- QFN36 - Package
- World class interoperability & customer support

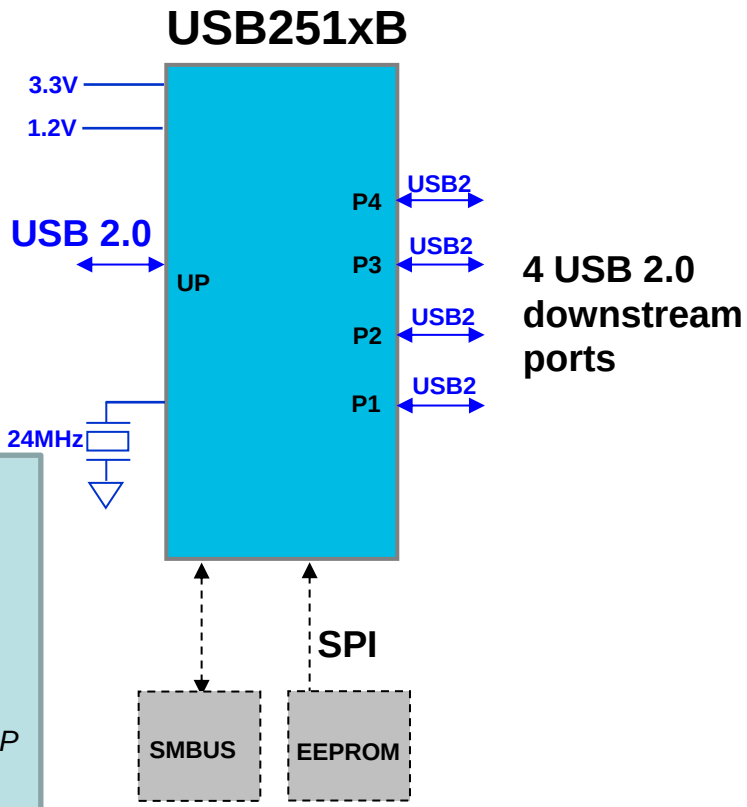

		Next Gen Hubs	
USB2514B	→	USB2534	36pin low power
USB2513B	→	USB2533	36pin low power
USB2512B	→	USB2532	36pin low power
USB3503 (HSIC)	→	USB3613 (HSIC)	Mobile apps WLCSP
USB3803	→	USB3813	Mobile apps WLCSP
USB2412	→	USB2422	24pin lower cost
		USB4604 (I/O Bridging)	
		USB4624 (+HSIC)	

USB46X4/3X13

USB251XB

<< BACK

USB2.0 Hub Controllers
USB253x/3x13/46x4

Online Datasheet

- **Integrated Controller with "Quad Page" Configuration Management for utmost flexibility**
- **Flex Connect (Port Reversal) 0,1**
- **I/O Bridging with Programmable Interfaces**
  - USB to SPI, UART, I2C
- **BC1.1, BC1.2, Apple Charging and China Charger compatibility**
- **2/3/4 port options in 36-pin QFN package**
- **HSIC versions available to interface with many major processors**
- **USB3x13 in miniature WLCSP ideal for mobile applications**
- **USB46x4 in 48-pin QFN package**
- **Pin Compatible versions w/USB2514B**

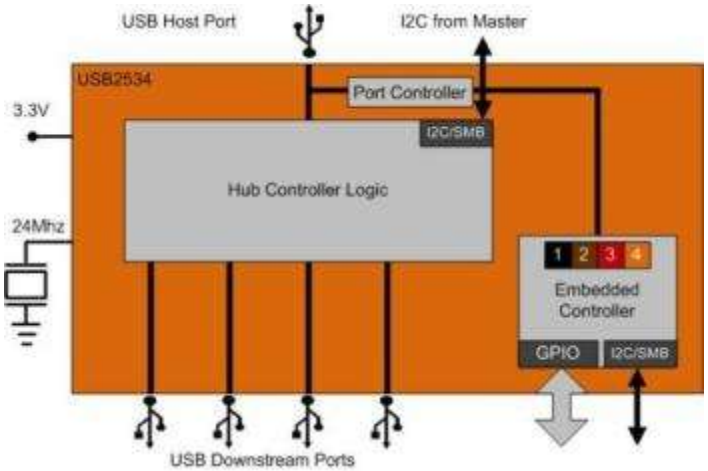

USB46X4/3X13

USB251XB

<< BACK

USB2.0 Hub
USB46x4 and USB3x13

Online Datasheet

- **Same features as the USB253x Family**
- **USB4604 and USB4624**

SPECS	USB4604	USB4624
Upstream Port	USB2.0 or HSIC	
Downstream Ports	4 x USB2.0	2 x USB2.0 / 2 x HSIC
Package	48-pin QFN	

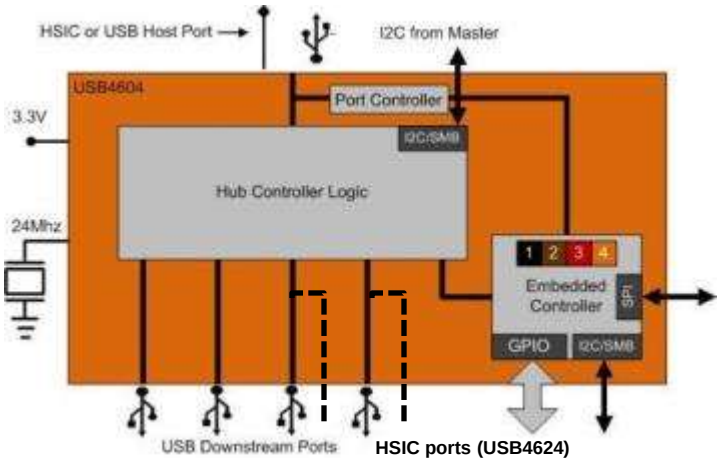

- **USB3613 and USB3813**

SPECS	USB3613	USB3813
Upstream Port	HSIC	USB2.0
Downstream Ports	2 x USB2.0 / 1 x HSIC	
Ref Clock	12/19.2/26/38.4Mhz*	
Package	30-ball WLCSP	

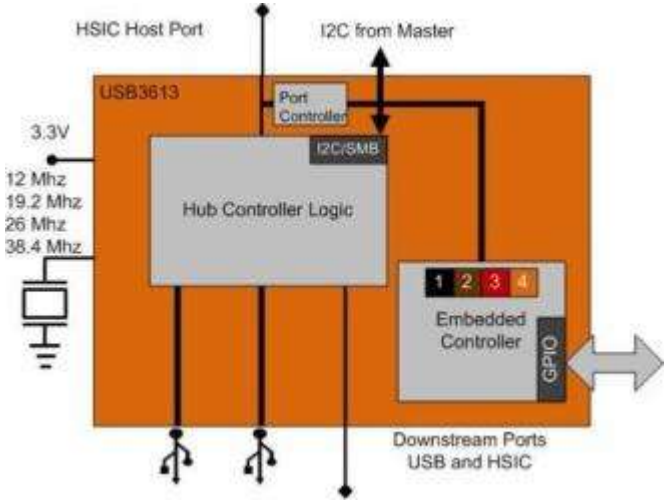

USB253X

USB251XB

** Can share system reference clock*

<< BACK

USB Flash Media Controller Overview

Online Datasheet

USB Card Reader Products	USB2244	USB2250	USB2640	USB2660	USB4640
Up Stream Interface	USB 2.0	USB 2.0	USB 2.0	USB 2.0	HSIC (USB 2.0)
Down Stream Output	SD, MMC	SD, MMC, CF, MS, xD	SD, MMC, MS, xD	2xSD, 2xMMC, MS, xD	SD, MMC, MS, xD
Down Stream USB Ports	None	None	2	2	2
Logical Units	1	1	1	1	1
Package Body size (mm)	36 QFN (6 x 6 x 0.9)	128 VTQDP (14 x 14 x 1.1)	48 QFN (7 x 7 x 0.9)	64 QFN (9 x 9 x 0.9)	48 QFN (7 x 7 x 0.9)

SD – SecureDigital, MMC – MultiMediaCard, CF – Compact Flash, MS – Memory Stick, xD – xD Picture Card

- **Ultra-fast flash media reader/writer for external memory card storage or embedded flash memory**
  - SD, MMC/eMMC, MS / MS-Pro / MS-Pro-HG, xD
- **USB interface for design ease and flexibility on placement**
- **USB port expansion options**

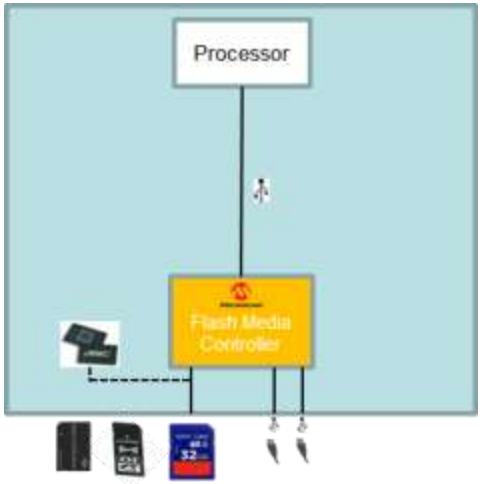

<< BACK

HSIC Product Portfolio

Online Datasheet

- **High-Speed Inter-Chip [HSIC]; USB2 chip-to-chip interconnect**
  - HSIC removes the analog transceivers designed for 5M cables in USB2 Eco Systems
  - ***Absolutely 100% software compatible*** as "USB Host" sees no different behavior

Product	Upstream	Downstream	Package	Applications
USB4640-HZH	HSIC	USB x2	48 QFN	Hub Combo (w/card reader)
USB4624-1080HN	HSIC/USB	USB x2 / HSIC x2	48 QFN	**Hub** Controller
USB4604-1080HN	HSIC/USB	USB x4	48 QFN	**Hub** Controller
USB3503A-1-GL	HSIC	USB x3	25 WLCSP	Mobile **Hub** with HSIC
USB3813-1080XY	USB	USB x2 / HSIC x1	30 WLCSP	Mobile **Hub** Controller
USB3613-1080XY	HSIC	USB x2 / HSIC x1	30 WLCSP	Mobile Low-Power **Hub** Controller

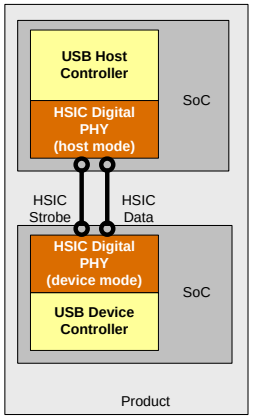

HSIC ***lowers power*** with 1.2V signaling
**note USB2 Signaling is 3.3V

<< BACK

USB3.0 Solutions Overview

Online Datasheet

- **Leveraging leadership position and expertise in USB**
- **Third generation of USB3.0 hub solutions**
  - USB-IF compliant hub
  - Hybrid solutions (USB2.0/3.0 ports)
  - High levels of integration featuring integrated controller providing ease-of-use and flexibility
  - Battery charger detection support
    - USB-IF Battery Charger v1.2
    - Apple charger, China charger, RIM
  - Industry's Most Complete Hub Product Line

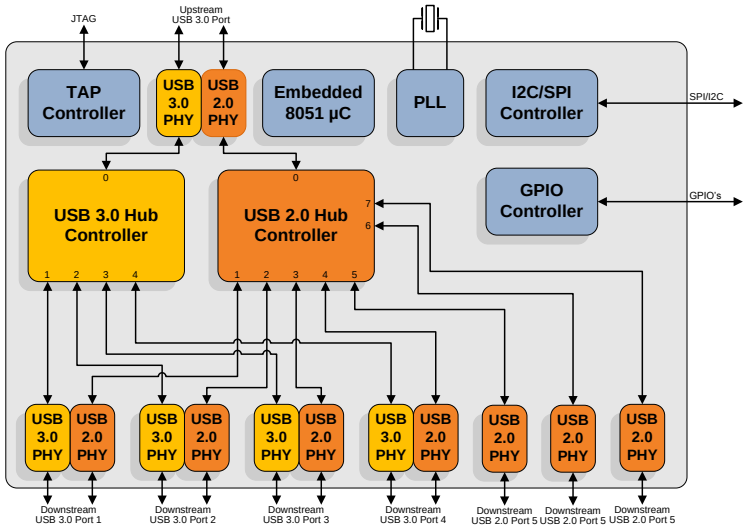

Part Number	Downstream	USB3 Logo
USB5537B-6080AKZE	7 Port Hybrid	TID 330000054
USB5537B-6070AKZE	7 Port Hybrid	TID 330000054
USB5534B-6080JZX	4 Port	TID 330000054
USB5533B-6080JZX	4 Port	TID 330000054
USB5532B-6080JZX	4 Port	TID 330000054

<< BACK

UTC2000

Online Datasheet

Features

- Basic USB-C™ Controller
- Simple and Fast Time-to-Market Solution
  - Add NEW USB-C Connector to Any Product
  - Flexible and Programmable Solution
- USB-C Cable Detection and Reversibility
  - Integrated control for optional switch mux
- Enables Default Power Control
  - Supports USB-IF standard 5V power profiles
  - Default, 5V/1.5A, 5V/3A
  - Vconn power enablement
- Integrated ADC for Voltage Monitoring on CC Pins
- Minimal External Discrete Components
- Interfaces to Microchip's USB Controller Hubs
- Package:
  - QFN16 (3 x 3 mm)

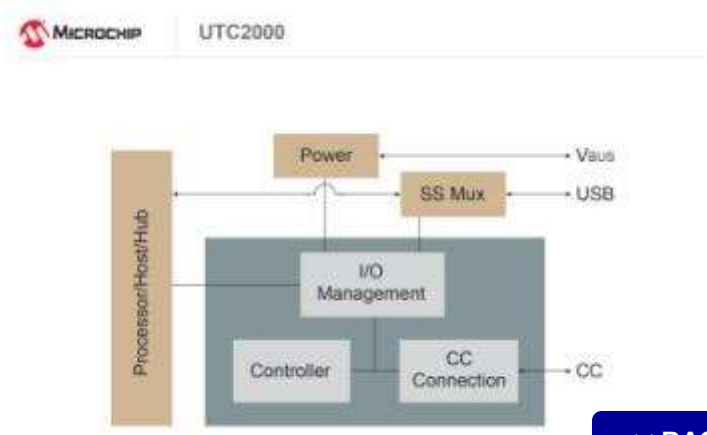

PART NUMBER	GRADE	MEDIA
UTC2000T/MG	Commercial	Tape/Reel
UTC2000T-I/MG	Industrial	Tape/Reel
UTC2000T-E/MG	Extended	Tape/Reel
UTC2000T-E/MG042	Automotive	Tape/Reel
UTC2000-E/MG042	Automotive	Tube*

<< BACK

USB3.1 Gen1 Compliant Smart Hubs

Online Datasheet

- **More Intelligence - Smart Hub**
  - I/O Bridging
  - Host Role Swap (FlexConnect)
  - Host Switching (FlexConnect)
- **Easier to Design/Manufacture**
  - Improved Signal Integrity
  - Turnkey Solutions – Boot Strapping
  - Configuration/Production Tool - ProTouch2
- **Smallest QFN Package in the Industry (7x7mm)**
- **Supporting USB Type-C™ designs**

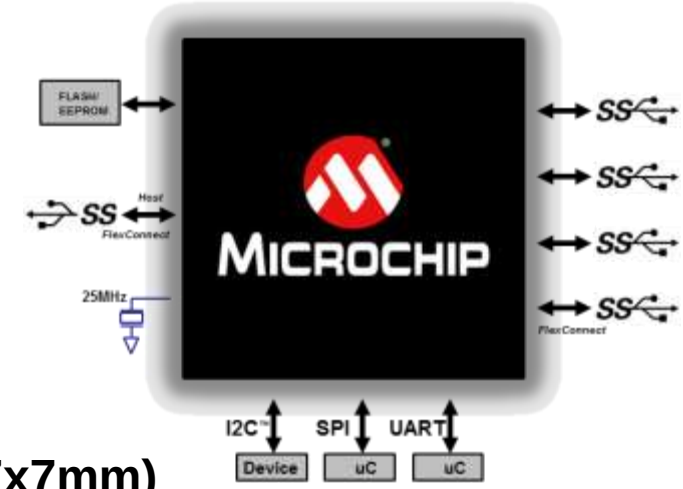

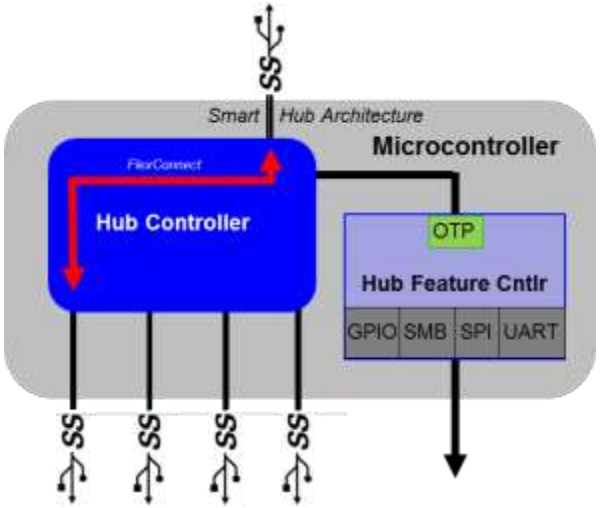

Part Number	Downstream	USB3 Logo
USB5734	4 Ports	TID 330000058
USB5744	4 Ports	TID 330000058

<< BACK

USB Transceiver Product Overview

Online Datasheet

USB PHY Products	USB3450	USB3500	USB3280 USB3290	USB3300	USB334x	USB333x
PHY Interface	UTMI+ (Device or Host)	UTMI+ (Device, Host, or OTG)	UTMI (Device)	ULPI (Device, Host, or OTG)	ULPI (Device, Host, or OTG)	ULPI (Device, Host, or OTG)
HS & FS USB	Yes	Yes	Yes	Yes	Yes	Yes
LS USB	Yes	Yes	No	Yes	Yes	Yes
Data Interface	8 bit Bidir	8 bit Bidir	8 bit Bidir	8 bit Bidir	8 bit Bidir	8 bit Bidir
Internal Reg	Yes	Yes	Yes	Yes	Yes	Yes
Package Body size (mm)	40 QFN (6x 6 x 0.9)	56 QFN (8 x 8 x 0.9)	36 QFN (6 x 6 x 0.9) 40 VFBGA (4 x 4 x 0.9)	32 QFN (5 x 5 x 0.9)	24 QFN (4 x 4 x 0.9) 25 BGA (3 x 3 x 0.8)	25 WLCSP (1.9 x 1.9 x 0.5)

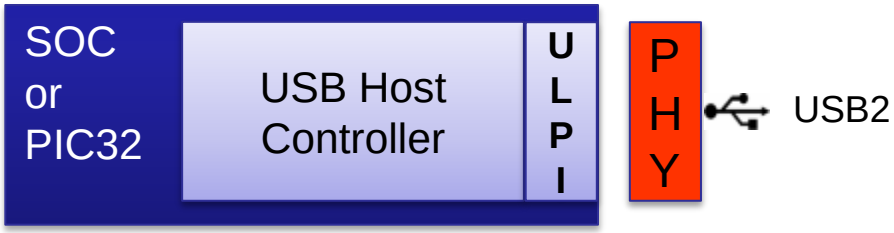

<< BACK

USB3740

Online Datasheet

Features:

- High-bandwidth USB 2.0 Switch with Dual Enables
  - For high-speed USB 2.0 data
- Multiplex differential outputs from a USB host device to one of two corresponding outputs
  - Enable DP/DM multiplexing
  - Flexible solution for embedded applications
- Ultra-low Current Consumption
  - Active (switch ON) = 5 uA (Vcc = 3V)
  - Standby (switch OFF) = 0.01 uA (Vcc = 3V)
- Competitive USB 2.0 Switch Specifications
  - Designed to pass USB signals from 0 to 3.3V
  - USB Mux on resistance < 6 ohms
  - USB Mux off leakage < 0.5 uA
  - Off isolation < -40 dB
  - On capacitance < 6 pF
  - High bandwidth: 1 GHz
- Extreme ESD Protection ± 15 kV (IEC)
- Package:
  - 10-lead 1.3 mm x 1.8 mm QFN with 0.4 mm pitch
  - 10-lead 1.6 mm x 2.1 mm QFN with 0.5 mm pitch

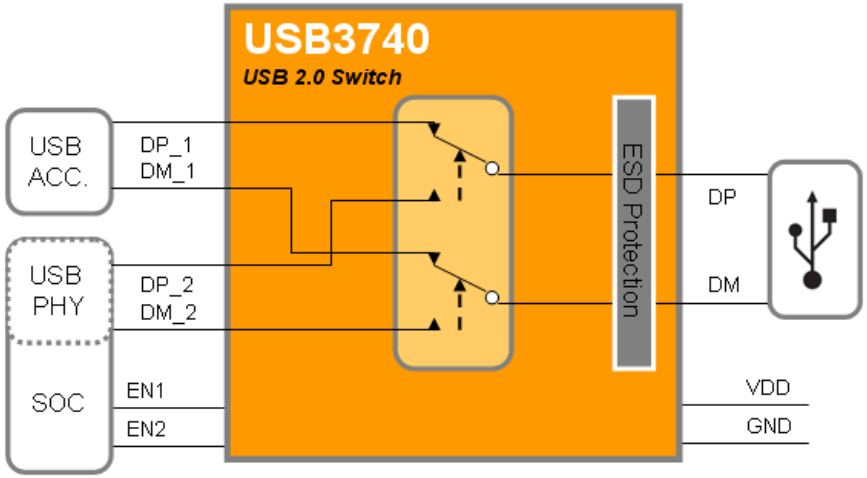

<< BACK

USB375X

Online Datasheet

Features:

- Integrated and Flexible USB Port Protection and Detection with Hi-Speed USB Switch
- ESD Protection: Up to ± 15 kV
- VBUS Overvoltage Protection
  - Low resistance switch for high current pass-through
  - Up to 28V of protection
- High-speed USB Switch for Port Sharing
  - Enable DP/DM multiplexing
  - Flexible solution for embedded applications
- Complete Battery Charger Detection Capability
  - USB-IF 1.1 battery charging (up to 1.5A)
  - Dedicated charging port (DCP*) i.e. Wall A/C adapter*
  - Charging downstream port (CDP) *i.e. USB-IF BC 1.1 port*
  - Standard downstream port (SDP) *i.e. PC or hub*
  - Supports detection of majority of USB (SE1) chargers
- Optional I^2C Inteferface
- Package:
  - 16-lead 3x3 QFN

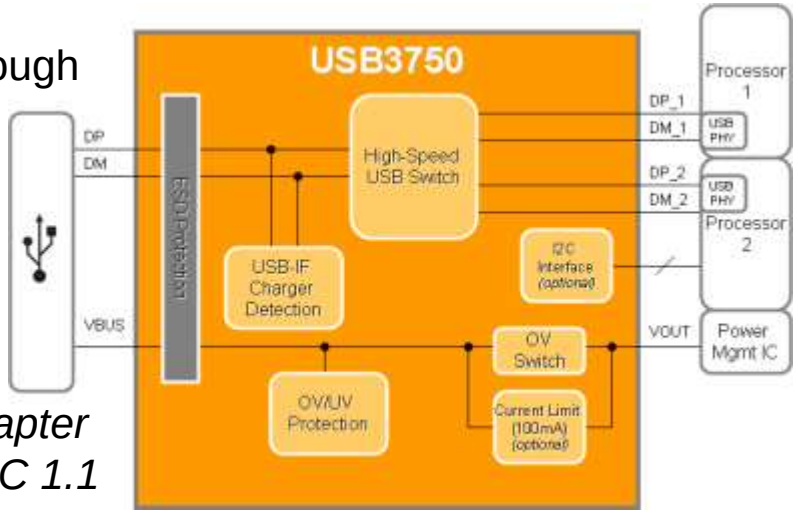

<< BACK

MCP2003/4
MCP2003A/4A

Online Datasheet

Features:

- Compliant with LIN Bus Specifications 1.3, 2.0, and 2.1 and are compliant to SAE J2602
- MCP2003/3A is industry standard pin-out
- MCP2004/4A supports Fault/TXE pin (Fault Output/Transmitter Enable)
- Support Baud Rates up to 20 Kbaud
- 43V load dump protected
- Very low EMI meets stringent OEM requirements
- Very high ESD immunity
  - >20kV on VBB (IEC 61000-4-2)
  - >14kV on LBUS (IEC 61000-4-2)
- Very high immunity to RF disturbances: Meets stringent OEM requirements
- Wide supply voltage, 6.0V - 18.0V continuous
- Extended Temperature Range: -40 to +125°C
- Interface to PIC® EUSART and standard USARTs
- Local Interconnect Network (LIN) bus pi
- Automatic thermal shutdown
- Low-power mode: ≅ 5 µA
- Software Library support for most

MCP2003 Block Diagram

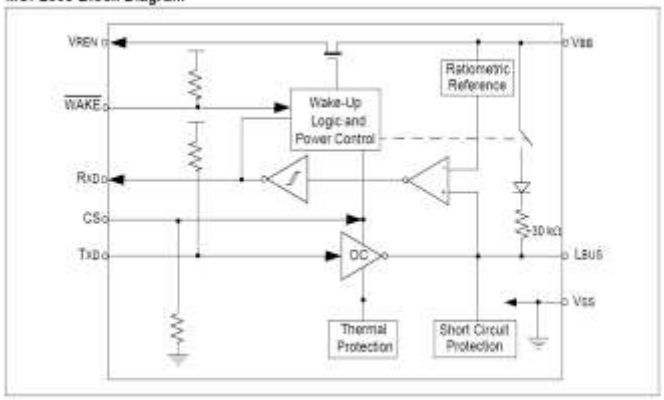

MCP2004 Block Diagram

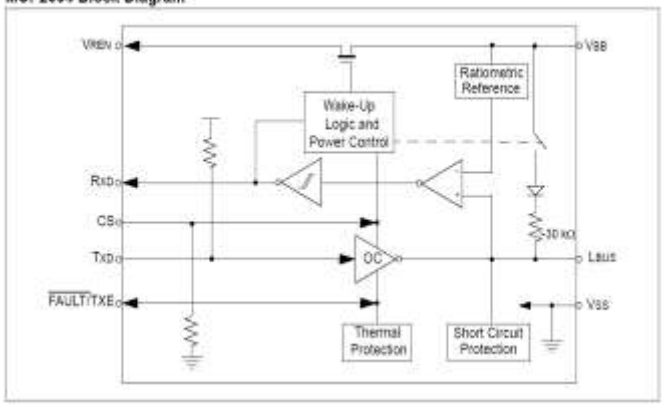

<< BACK

MCP2003B

Online Datasheet

Features:

- Compliant with Local Interconnect Network (LIN) Bus Specifications 1.3, 2.0, 2.1, 2.2, SAE J2602, and ISO17987
- Up to 20 Kbaud with LIN-Compatible Output Driver
- 60V Load Dump Protected
- Very High Electromagnetic Immunity (EMI) Meets Stringent OEM Requirements
- Direct Capacitor Coupling Robustness without Transient Voltage Suppressor (TVS):
  - ±35V on LBUS (SAE J2962-1)
  - ±85V on LBUS (SAE J2962-1)
- High Electrostatic Discharge (ESD) Immunity without TVS:
  - >25kV on LBUS (SAE J2962-1)
  - >15kV on VBB (IEC 61000-4-2)
  - >6 kV on LBUS (IEC 61000-4-2)
- Very High Immunity to RF Disturbances Meets Stringent OEM Requirements
- Wide Supply Voltage: 5.5V – 30.0V Continuous
- Extended (E) Temperature Range: -40°C to +125°C
- High (H) Temperature Range: -40°C to +150°C
- Automatic Thermal Shutdown
- Low-Power Mode:
  Receiver monitoring bus and transmitter off (~5 µA)

MCP2003B
SOIC

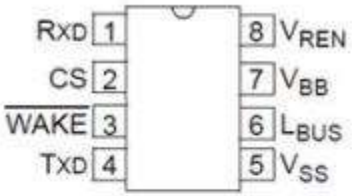

MCP2003B
2x3 DFN*

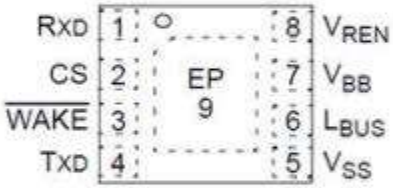

MCP2003B
3x3 DFN*

<< BACK

MCP23008 / 23S08

Online Datasheet

Features:

- 8-bit Remote Bidirectional I/O Port
- High-speed I²C™ Interface (MCP23008): 100kHz, 400kHz and 1.7MHz Modes
- High-speed SPI Interface (MCP23S08): 10MHz
- Hardware Address pins:
  - Three for the MCP23008 to allow up to Eight Devices on the bus
  - Two for the MCP23S08 to allow up to Four Devices using the same chip-select
- Configurable Interrupt Output Pin: Active-high, Active-low or Open-drain
- Configurable interrupt source
- Polarity Inversion Register to Configure the Polarity of the Input Port Data
- External Reset Input
- Low standby current: 1µA (max.)
- Operating voltage: 1.8V to 5.5V

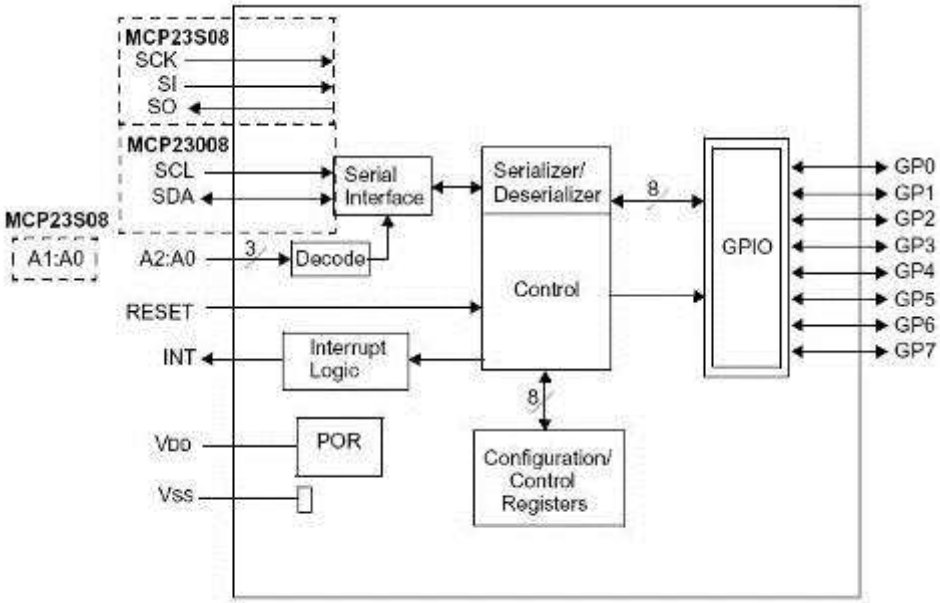

<< BACK

MCP23009 / 23S09

Online Datasheet

Features:

- 8-bit remote bidirectional I/O port:
  - I/O pins default to input
- Open-drain outputs:
  - 5.5V tolerant, 25mA sink capable (per pin), 200 mA total
- High-speed I²C™ interface: (**MCP23009**)
  - 100 kHz, 400 kHz, 3.4MHz
- High-speed SPI interface: (**MCP23S09**)
  - 10MHz
- Single hardware address pin: (**MCP23009**)
  - Voltage input to allow up to eight devices on the bus
- Configurable interrupt output pins:
  - Configurable as active-high, active-low or open-drain
- Configurable interrupt source:
  - Interrupt-on-change from configured defaults or pin change
- Polarity inversion register to configure the polarity, of the input port data
- External reset input
- Low standby current as low as 1µA
- Operating voltage: 1.8V to 5.5V

Packages: 16-pin 3x3 QFN, 18-pin PDIP,18-pin SOIC, 20-pin SSOP

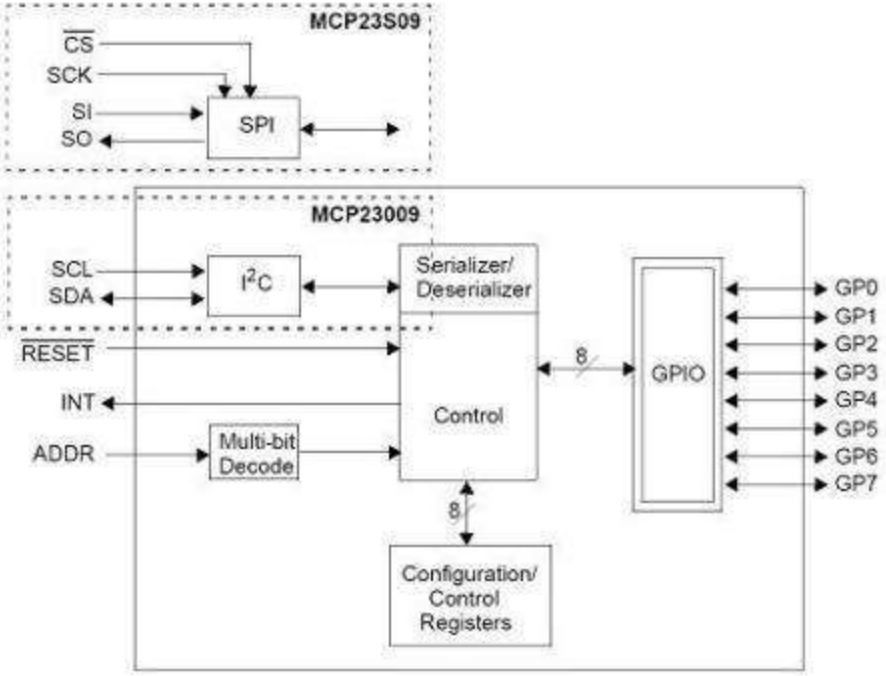

<< BACK

MCP23017 / 23S17

Online Datasheet

Features:

- 16-bit remote bidirectional I/O Port:
- High-speed I²C™ interface (MCP23017): 100kHz, 400kHz and 1.7MHz modes
- High-speed SPI interface (MCP23S17): 10MHz (max.)
- Three Hardware Address Pins to allow up to Eight Devices on the Bus
- Configurable Interrupt Output Pins: Configurable as Active-high, Active-low or Open-drain
- INTA and INTB can be Configured to Operate Independently or Together
- Configurable Interrupt Source:
  - Interrupt-on-change from configured register defaults or pin changes
- Polarity Inversion Register to Configure the Polarity of the Input Port Data
- External Reset Input
- Low standby current: 1µA (max.)
- Operating voltage: 1.8V to 5.5V
- Packages: 28-pin PDIP, SOIC, SSOP and QFN

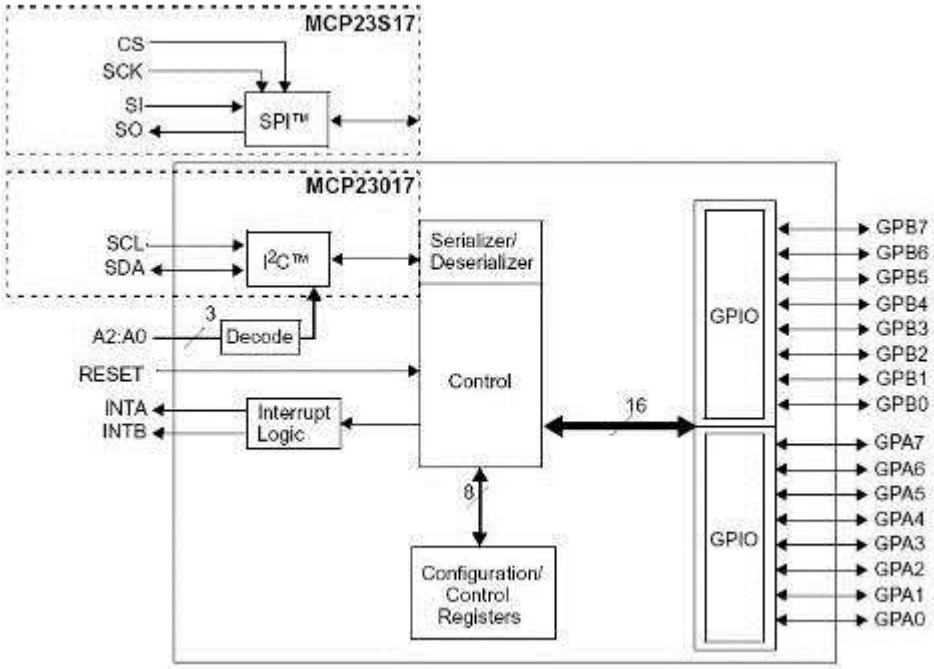

<< BACK

MCP23018 / 23S18

Online Datasheet

Features:

- 16-bit remote bidirectional I/O port:
  - I/O pins default to input
- Open-drain outputs:
  - 5.5V tolerant, 25mA sink capable (per pin), 400mA total
- High-speed I²C™ interface: (MCP23018)
  - 100kHz, 400kHz, 3.4MHz
- High-speed SPI interface: (MCP23S18)
  - 10MHz: 2.7V ≤ V_{DD} ≤ 5.5V
- Single hardware address pin: (MCP23018)
  - Voltage input to allow up to eight devices on the bus
- Configurable interrupt output pins:
  - Configurable as active-high, active-low or open-drain
- Configurable interrupt source:
  - Interrupt-on-change from configured defaults or pin change
- Polarity inversion register to configure the polarity of the input port data
- External reset input
- Low standby current: 1µA (-40°C ≤ T_A ≤ +85°C)
  6µA (+85°C ≤ T_A ≤ +125°C)
- Operating voltage: 1.8V to 5.5V
- Packages: 28-pin PDIP, 28-pin SOIC (300 mil), 24-pin QFN, 24-pin SSOP (MCP23018 only)

Block Diagram

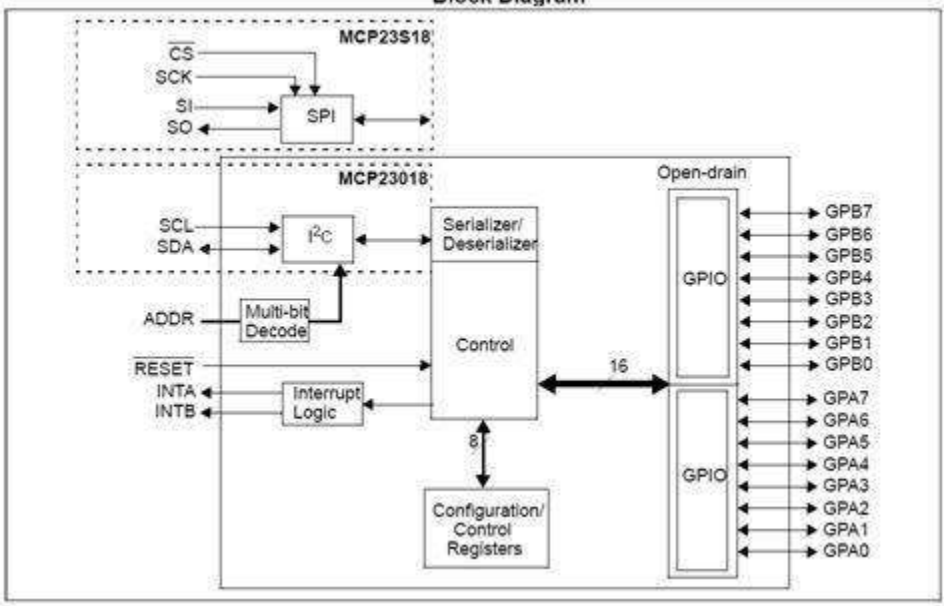

<< BACK

MCP23016

Online Datasheet

Features:

- 16-Bit Remote Bidirectional I/O Port
- Fast I²C™ bus Clock Frequency (0 to 400 kbits/s)
- Three Hardware Address Pins allow use of up to Eight Devices
- High-current Drive Capability per I/O: ±25mA
- Open-drain interrupt output on input change
- Interrupt Port Capture Register
- Internal Power-On Reset (POR)
- Polarity Inversion Register to Configure the Polarity of the Input Port Data
- Compatible with most Microcontrollers
- Industrial temperature range: -40°C to +85°C

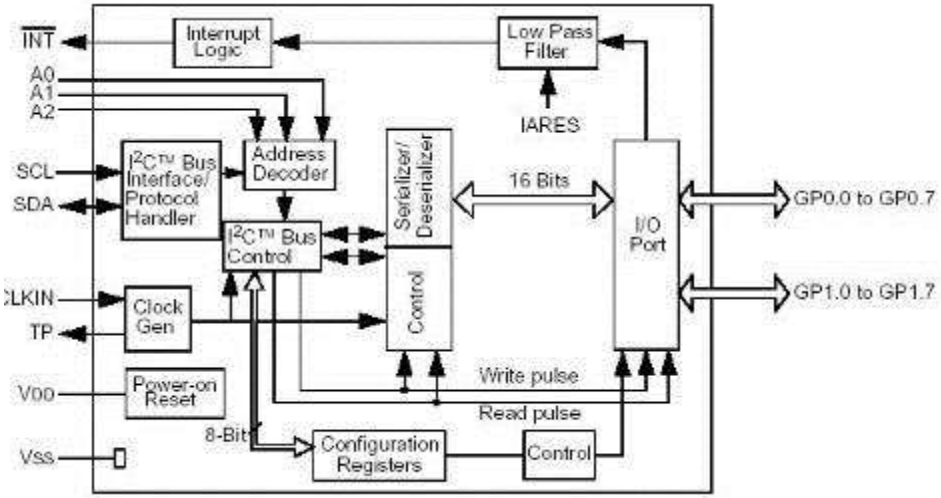

<< BACK

RE46C100

Online Datasheet

Features:

- Low Quiescent Current (<100nA)
- Low Driver R_{ON}: 20Ω (typ.) at 9V
- Wide Operating Voltage Range
- 8-pin PDIP and SOIC Packages
- Available inRoHS Compliant Pb-free Packaging

Typical Application

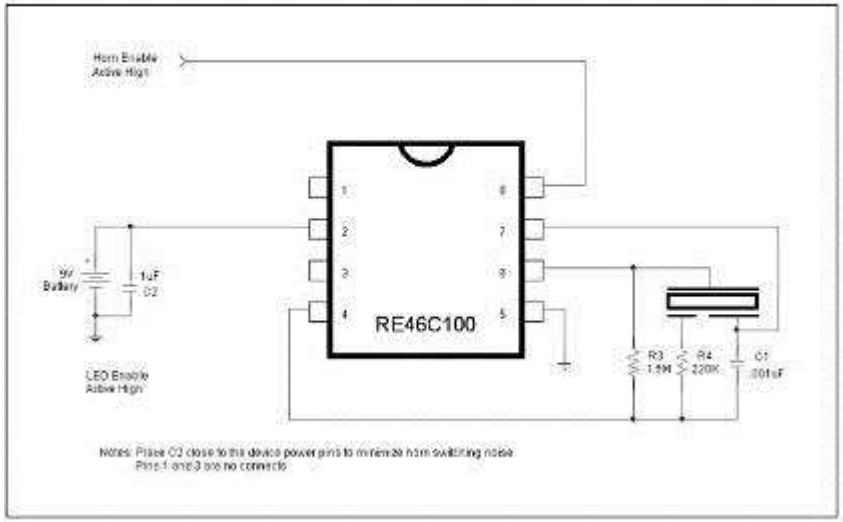

Functional Block Diagram

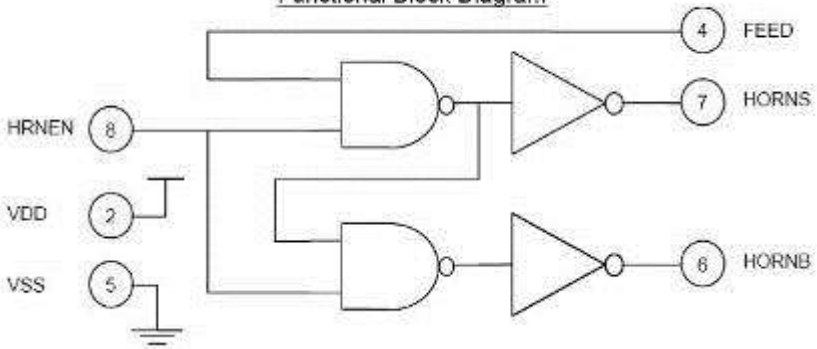

<< BACK

RE46C101

Online Datasheet

Features:

- Low Quiescent Current (<100nA)
- Low Driver R_{ON}: 20Ω (typ.) at 9V
- Wide Operating Voltage Range
- 8-pin PDIP and SOIC Packages
- Available in RoHS Compliant Pb-free Packaging

Typical Application

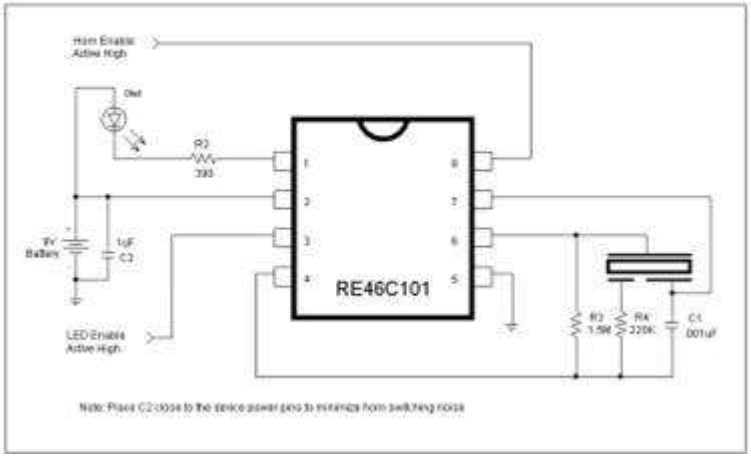

Functional Block Diagram

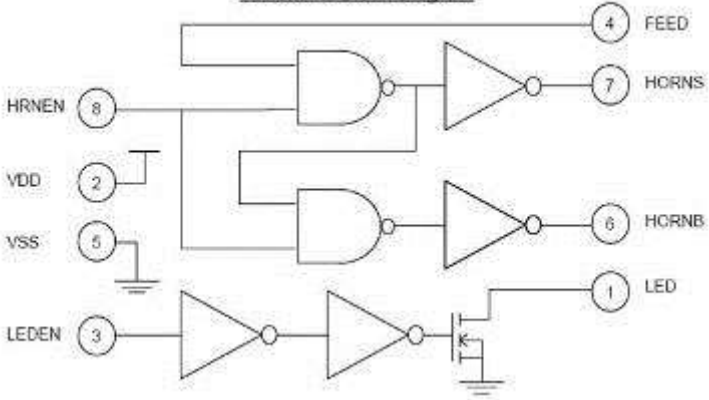

<< BACK

RE46C104

Online Datasheet

Features:

- Low Quiescent Current
- Low Driver R_{ON}
- Wide Operating Voltage Range
- Available in RoHS Compliant Pb Free Packaging

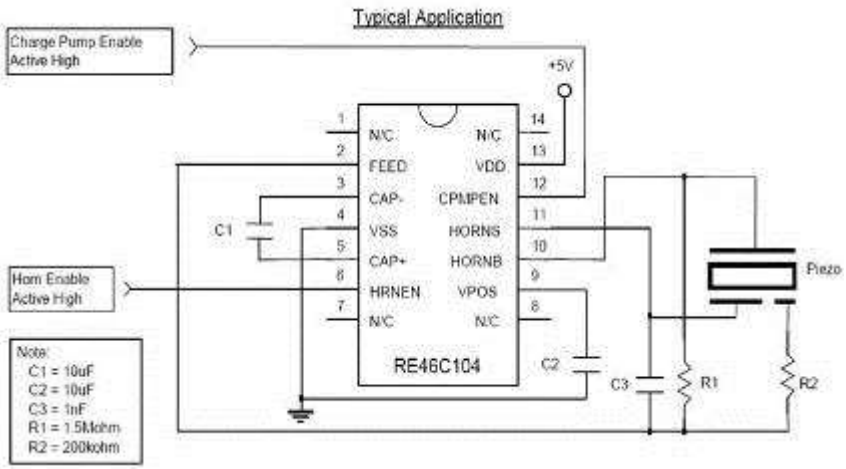

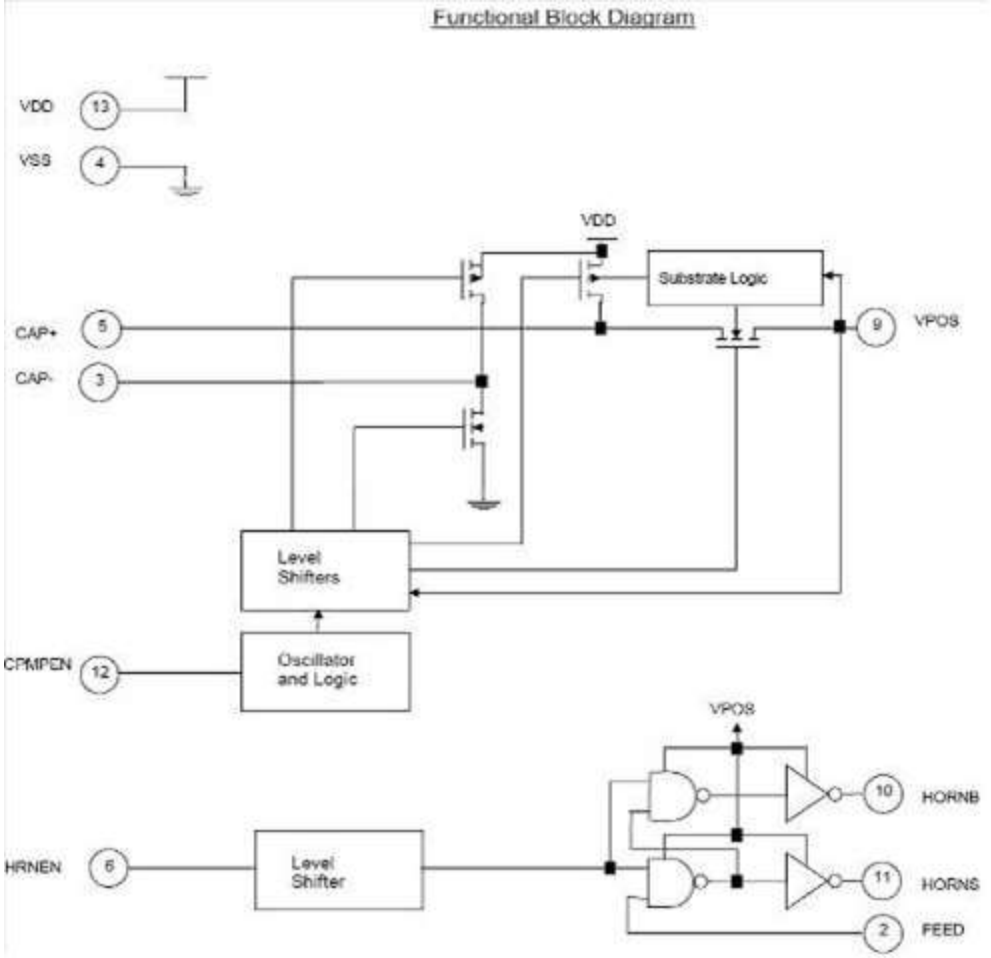

<< BACK

RE46C105

Online Datasheet

Features:

- Low Quiescent Current
- Low Horn Driver R_{ON}
- Voltage Regulation to 3.3V or 5V
- Low Battery Detection
- Available in PDIP and SOIC packaging

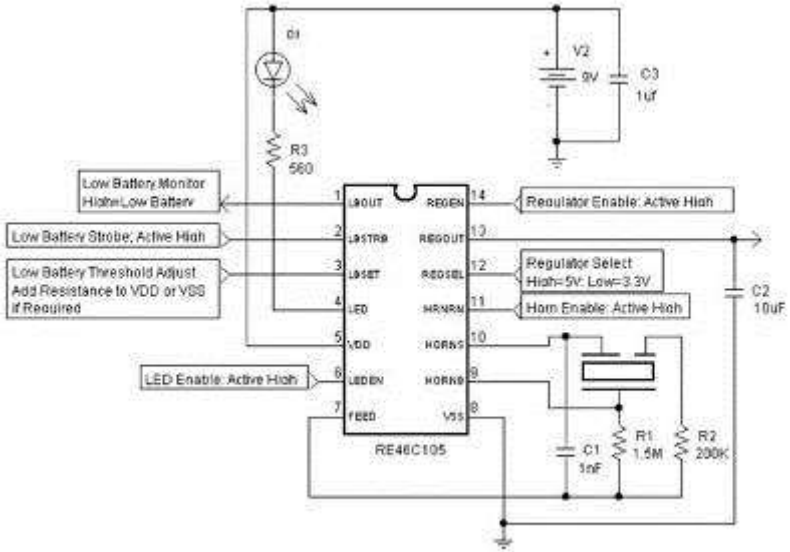

Typical Application Using Self Resonating Piezoelectric Horn

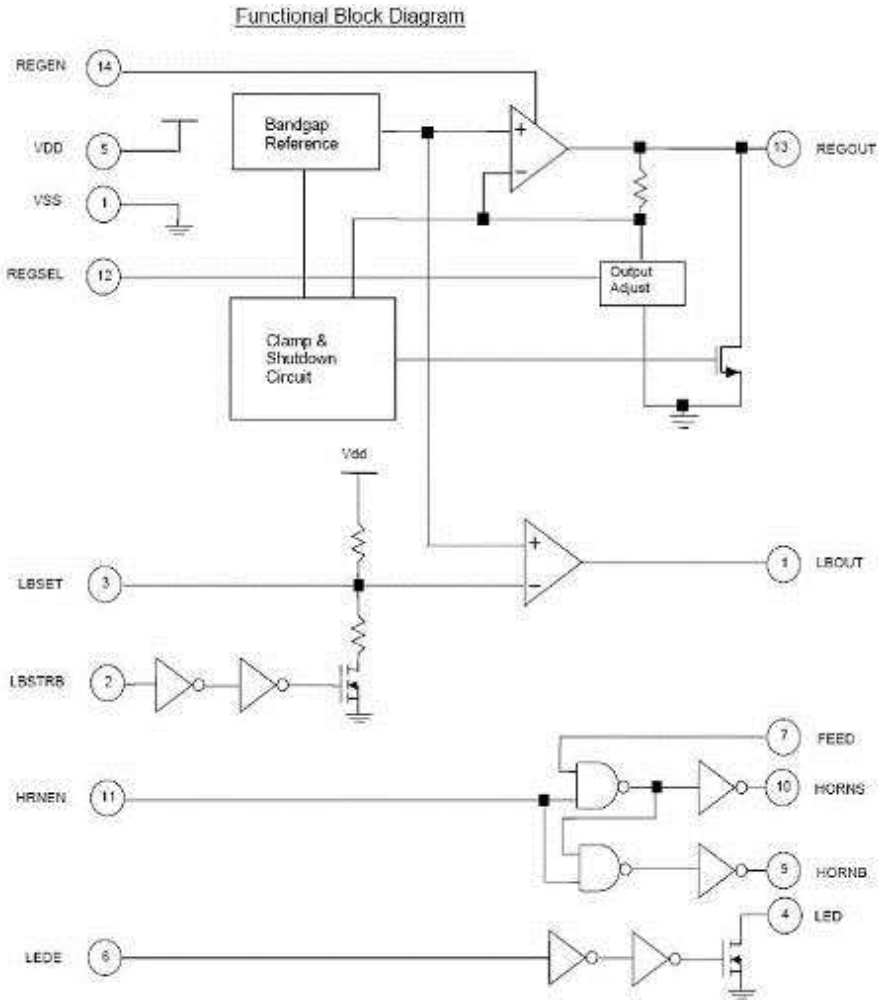

<< BACK

RE46C107

Online Datasheet

Features:

- Low Quiescent Current
- 10V Up Converter
- Low Horn Driver R_{ON}
- Voltage Regulation to 3.0V or 3.3V
- Low Battery Detection

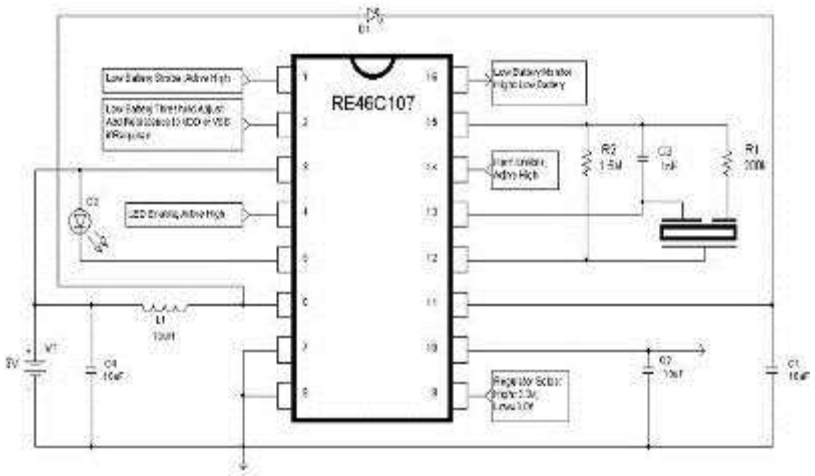

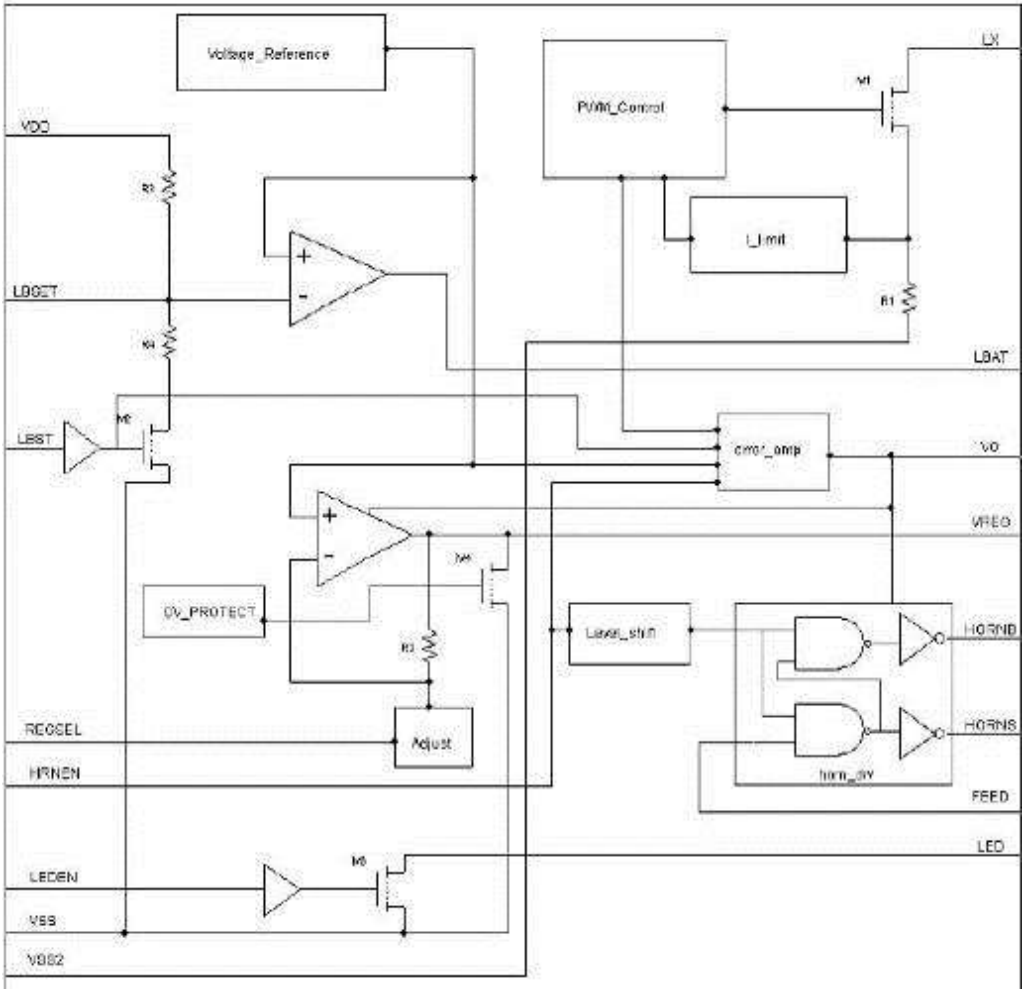

<< BACK

RE46C108

Online Datasheet

Features:

- Low Quiescent Current
- Low Horn Driver R_{ON}
- Voltage Regulation to 3.3V or 5V
- Available in PDIP and SOIC packages

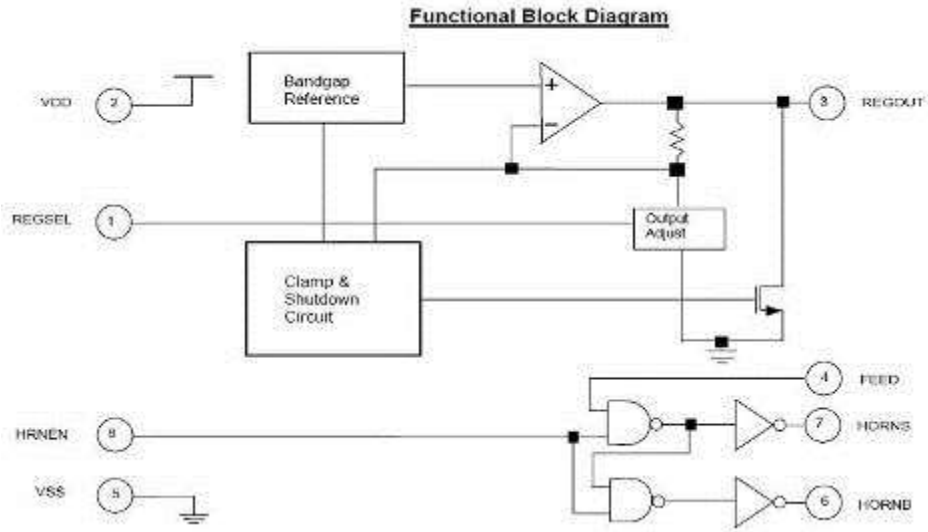

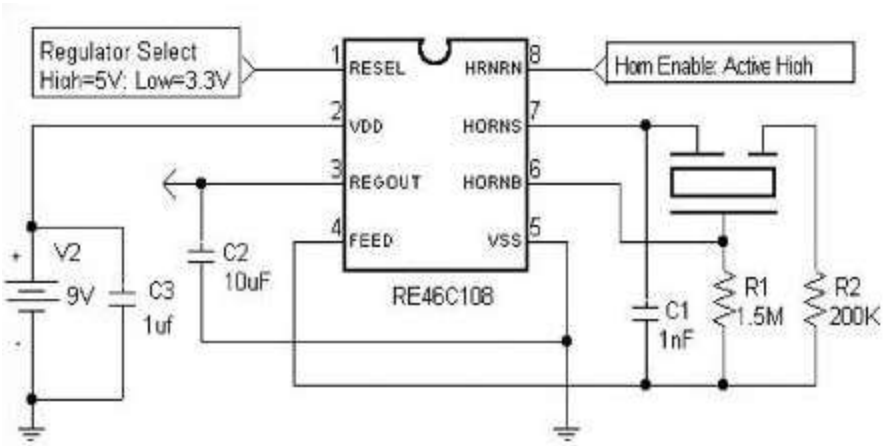

Typical Application Using Self Resonating Piezoelectric Horn

<< BACK

RE46C109

Online Datasheet

Features:

- Low Quiescent Current
- 12V Boost Regulator
- Low Horn Driver R_{ON}
- 3V Regulator, other Options Available
- Low Battery Detection Interface
- Power Good and Brownout Circuits
- Device interconnection
- Available in PDIP and SOIC packages

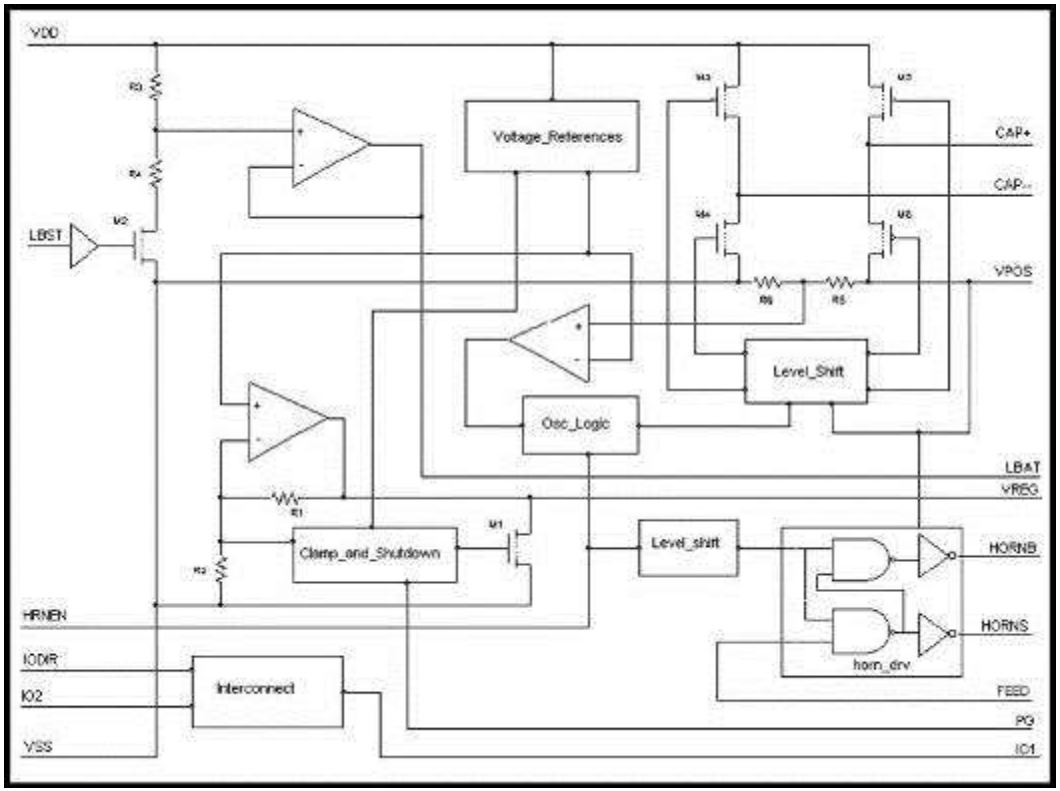

Typical Application Circuit

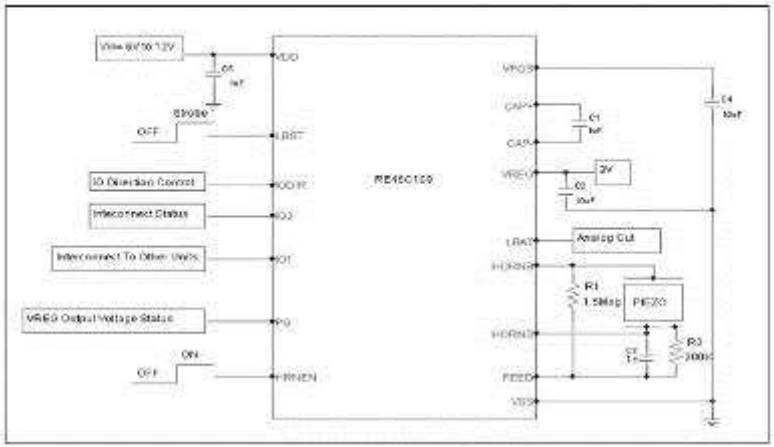

<< BACK

RE46C117

Online Datasheet

Features:

- Low Quiescent Current
- 10V Up Converter
- Low Horn Driver R_{ON}
- Available in PDIP and SOIC Packages

Typical Application Circuit

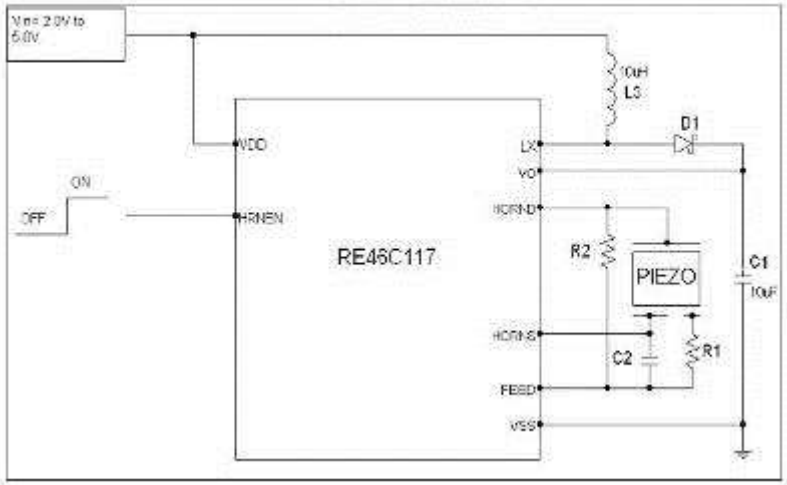

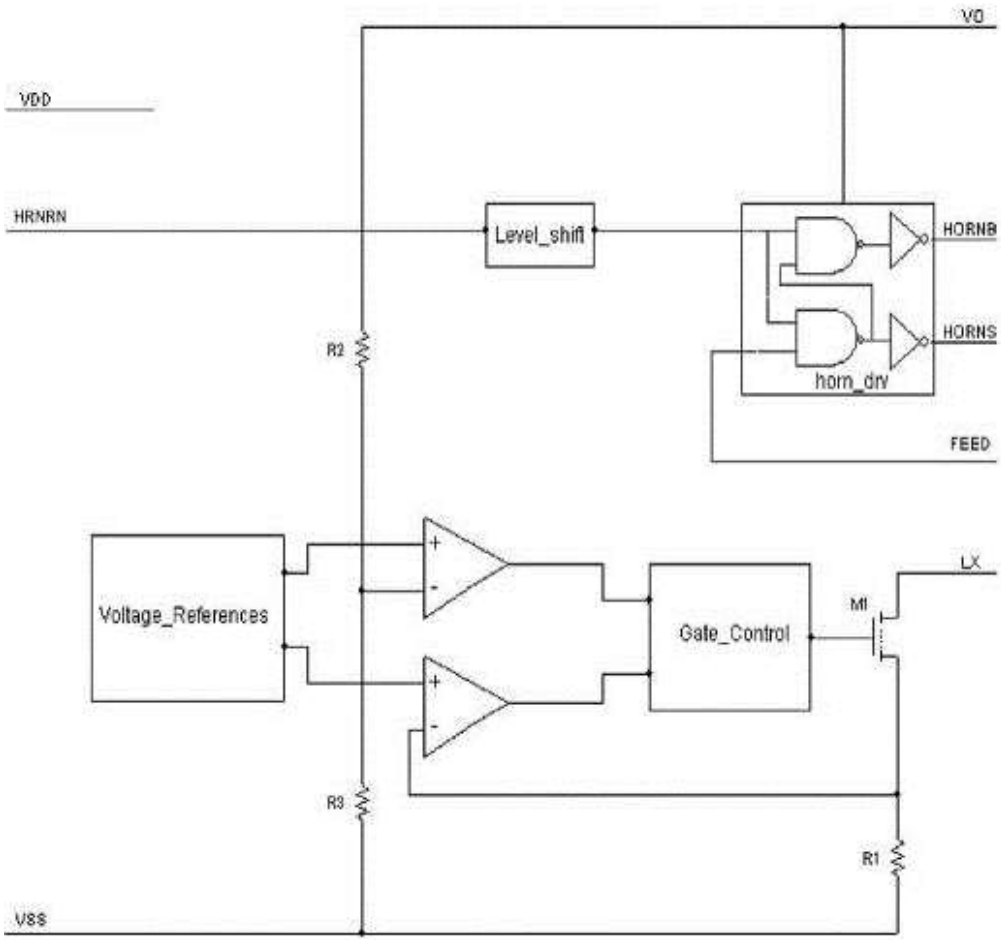

<< BACK

RE46C119

Online Datasheet

Features:

- Low Quiescent Current
- 12V Boost Regulator
- Low Horn Driver R_{ON}
- 3V Regulator, other Options Available
- Low Battery Detection Interface
- Power Good Circuit
- Device interconnection
- Available in PDIP and SOIC packages

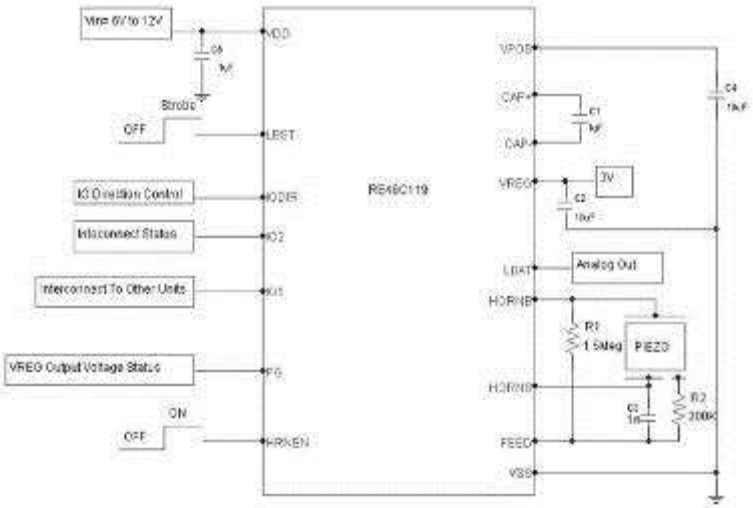

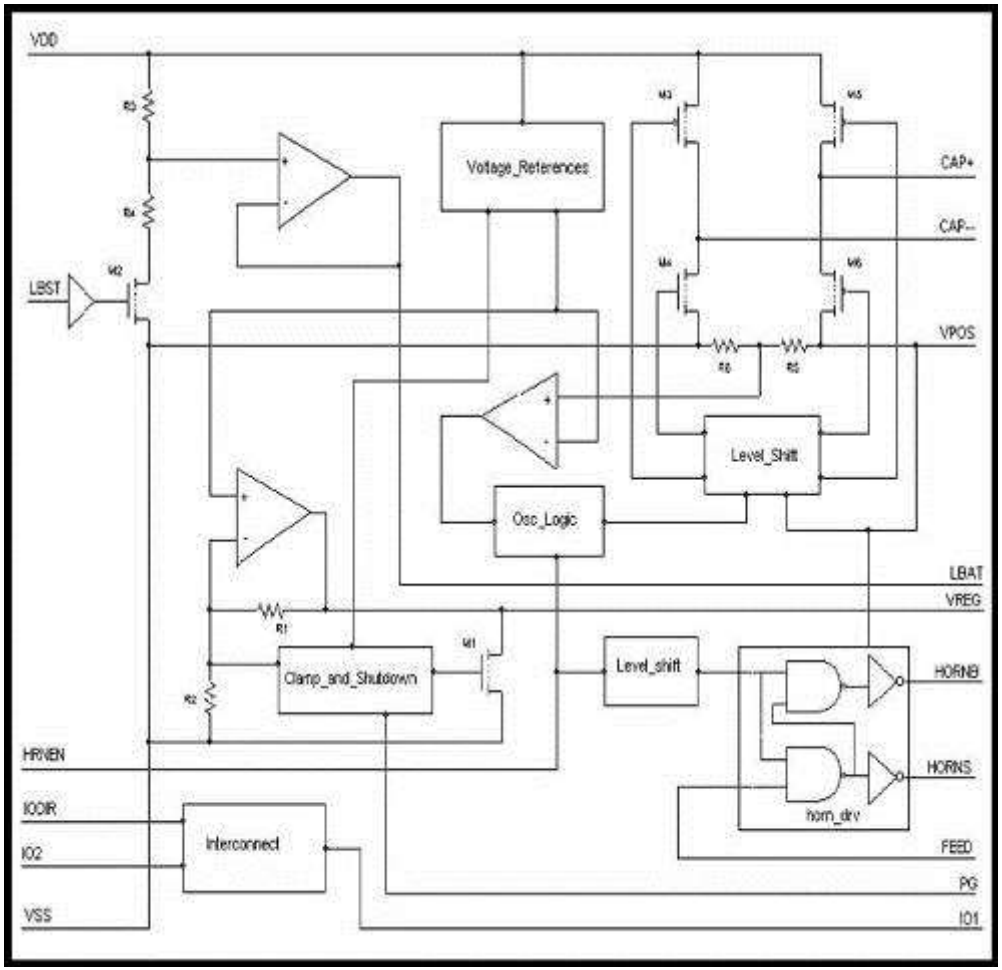

<< BACK

RE46C317/8

Online Datasheet

Features:

- 3V Operation
- Low Quiescent Current
- 10V Up Converter
- Low Horn Driver R_{ON}
- Horn Enable
  - RE46C317: Three states
  - RE46C318: Two states
- Compatible with RE46C117
- Available in 8-lead PDIP and SOIC

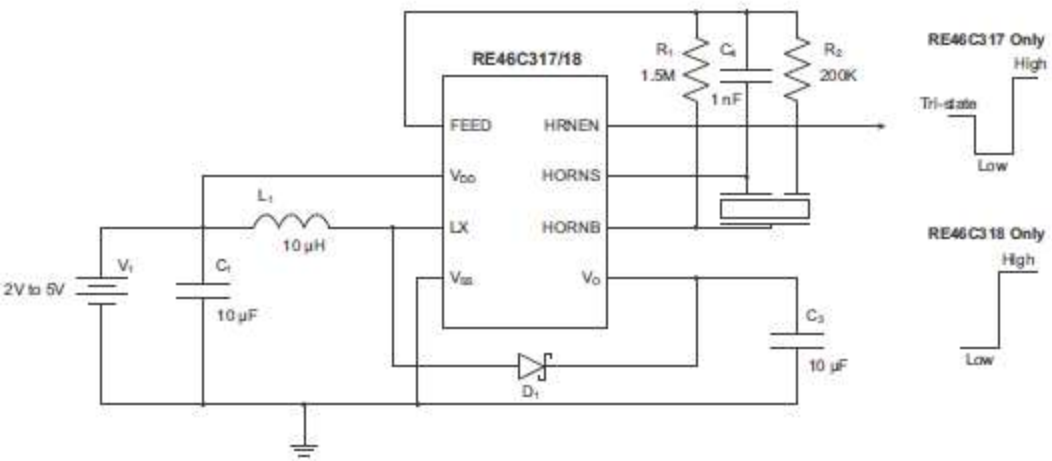

<< BACK

RE46C120

Online Datasheet

Features:

- Guard Outputs for Ion Detector Input
- ±0.75pA Detect Input Current
- Internal Reverse Battery Protection
- Internal Low Battery Detection
- Pin Selectable Horn Pattern
- Low Quiescent Current Consumption (<6.5µA)
- 16-lead PDIP
- ESD Protection on all Pins

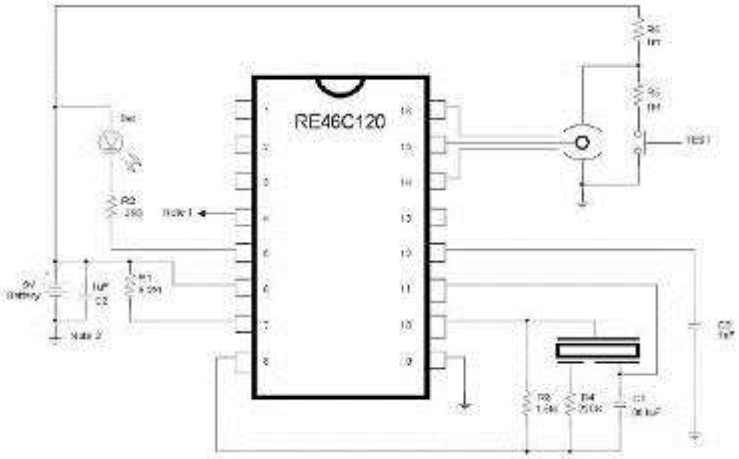

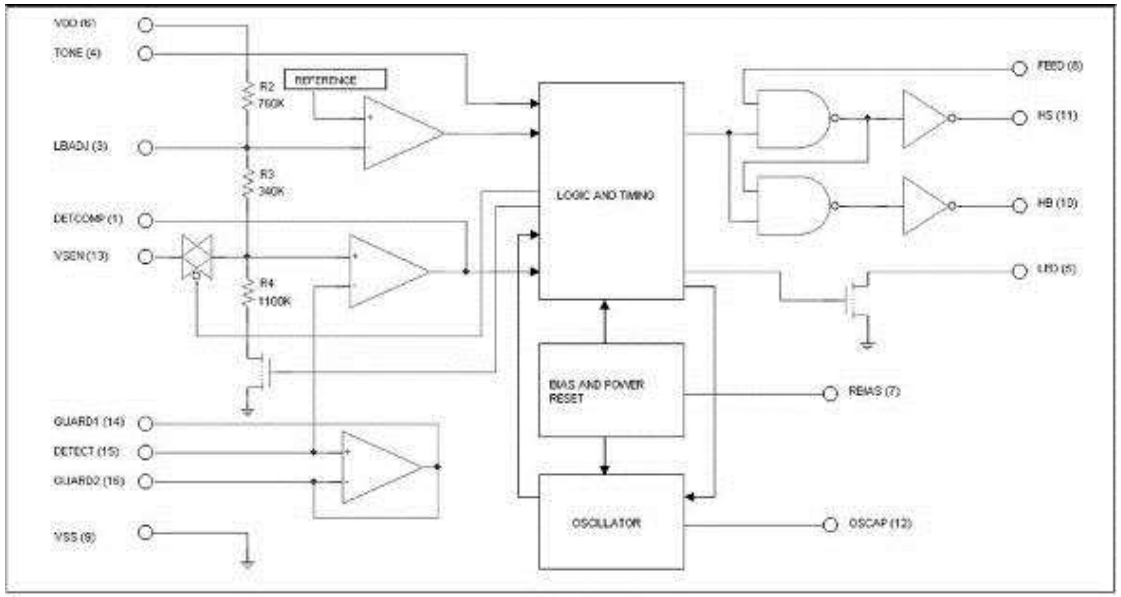

<< BACK

RE46C121

Online Datasheet

Features:

- Guard Outputs for Ion Detector Input
- ±0.75pA Detect Input Current
- Internal Reverse Battery Protection
- Internal Low Battery Detection
- Low Quiescent Current Consumption (<6.5µA)
- Available in 16-lead PDIP or 16-lead SOIC
- ESD Protection on all Pins
- Interconnect up to 40 Detectors

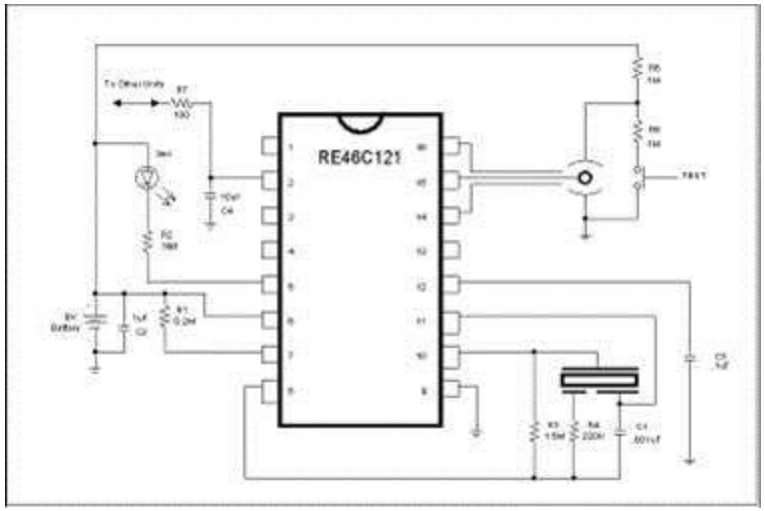

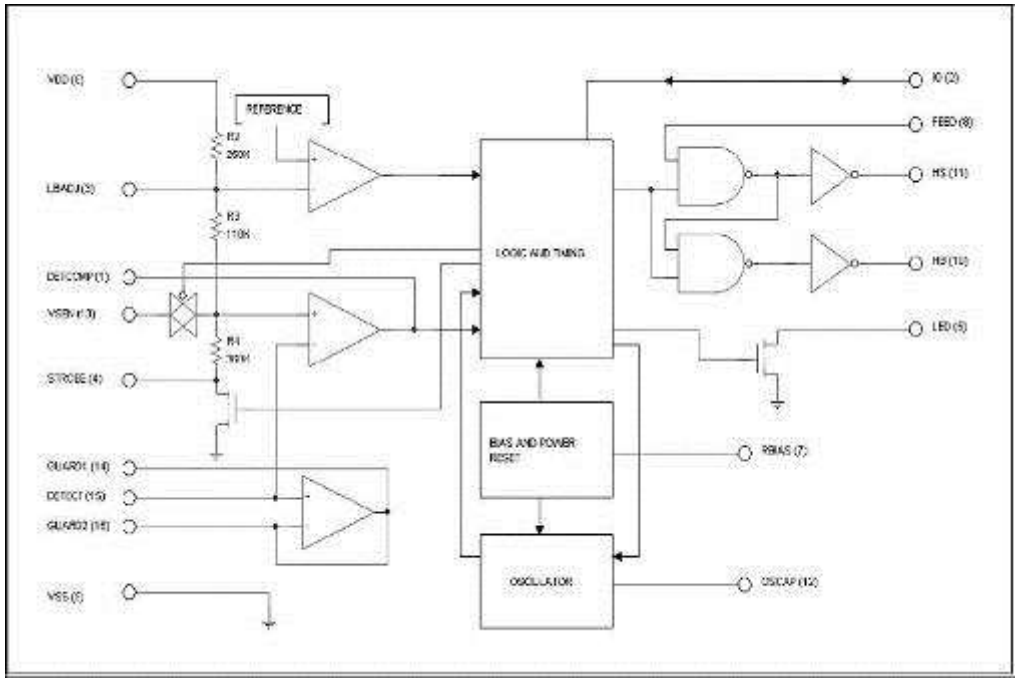

<< BACK

RE46C122

Online Datasheet

Features:

- >1500V ESD Protection (HBM) on all Pins
- Guard Outputs for Ion Detector Input
- ±0.75pA Detect Input Current
- Internal Reverse Battery Protection
- Low Quiescent Current Consumption (<6.5µA)
- Available in 16-lead PDIP or 16-lead SOIC
- Internal Low Battery Detection
- Power Up Low Battery Test
- Interconnect up to 40 Detectors
- 10 Minute Timer for Sensitivity Control

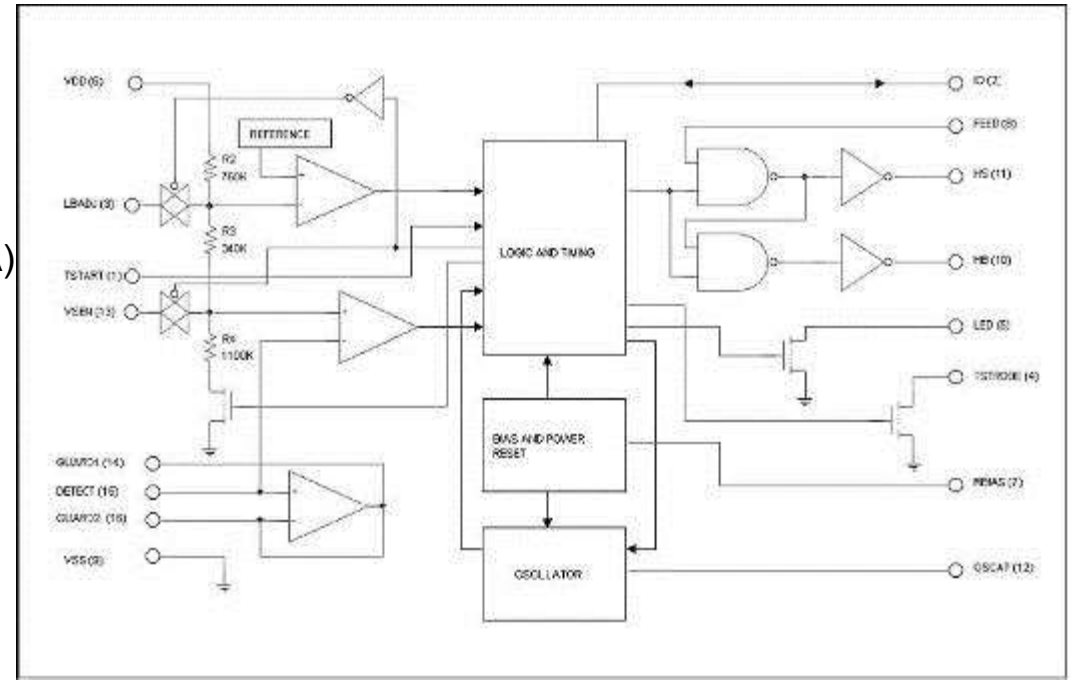

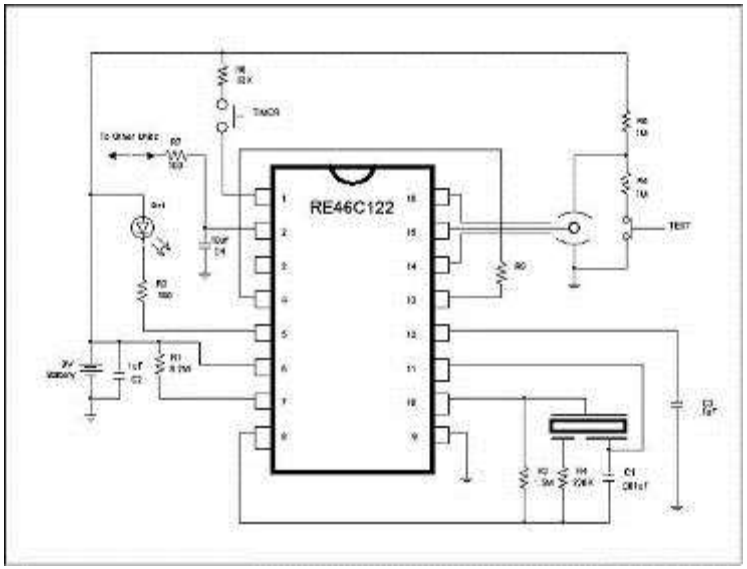

<< BACK

RE46C126

Online Datasheet

Features:

- Guard Outputs for Ion Detector Input
- ±0.75pA Detect Input Current
- Internal Reverse Battery Protection
- Internal Low Battery Detection
- Low Quiescent Current Consumption (<6.5µA)
- Available in 16-lead PDIP or 16-lead SOIC
- ESD Protection on all Pins
- Interconnect up to 40 Detectors

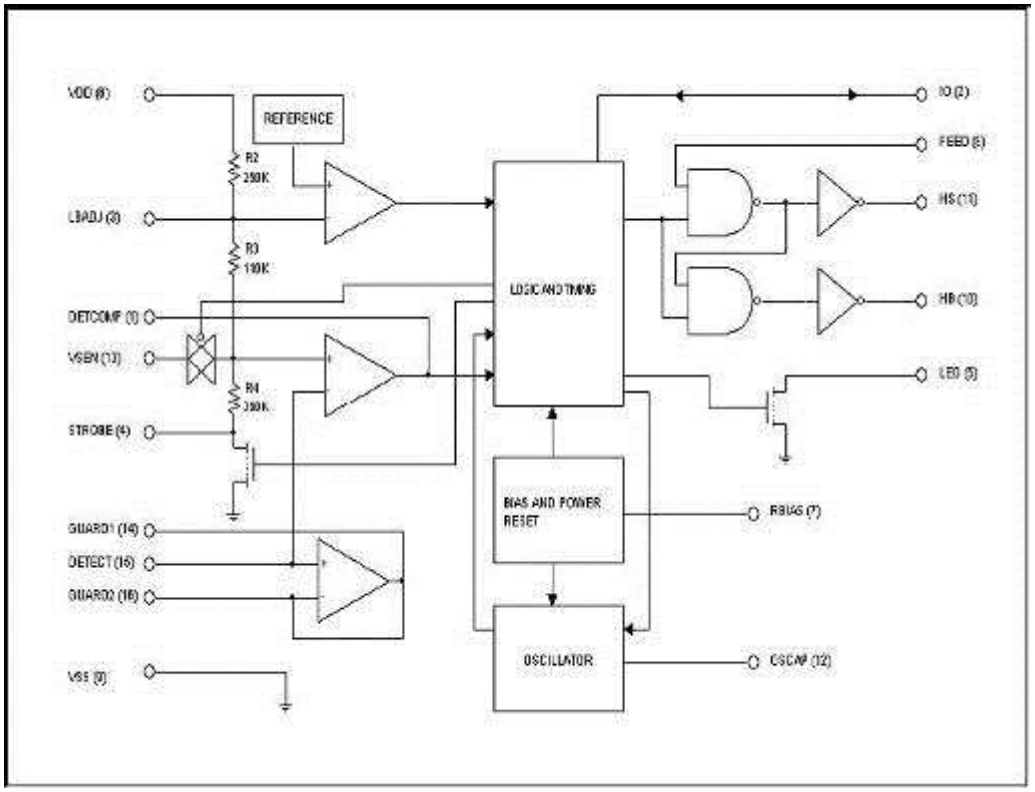

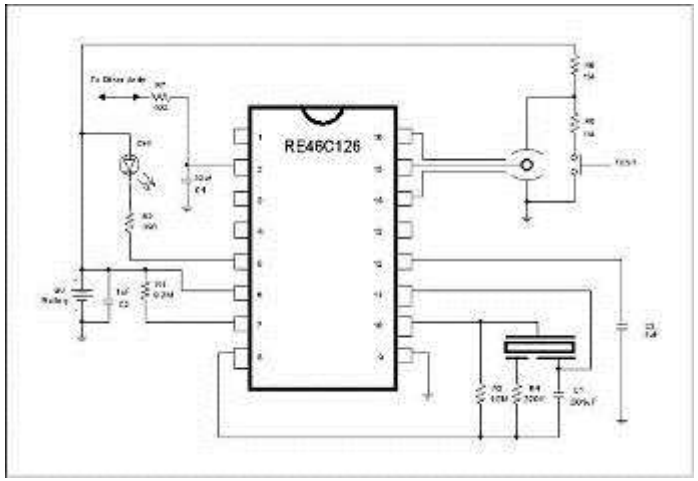

<< BACK

RE46C127

Online Datasheet

Features:

- Guard Outputs for Ion Detector Input
- ±0.75pA Detect Input Current
- Internal Reverse Battery Protection
- Low Quiescent Current Consumption (<6.5µA)
- Available in 16-lead PDIP or 16-lead SOIC
- ESD Protection on all Pins
- Internal Low Battery Detection
- Interconnect up to 40 Detectors
- 8 Minute Timer for Sensitivity Control

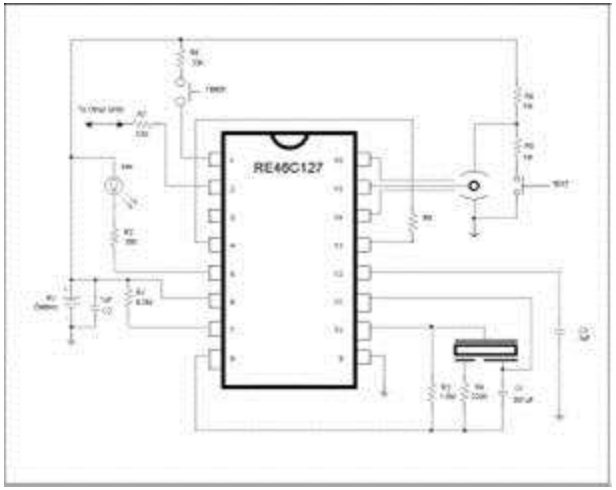

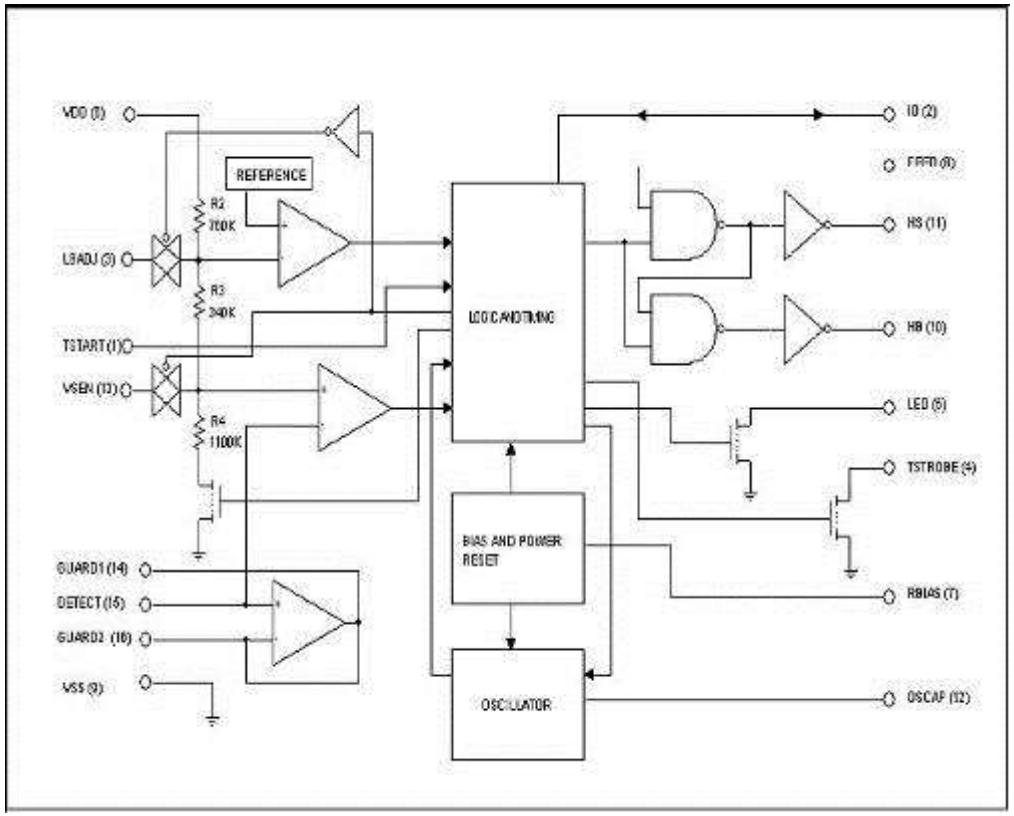

<< BACK

RE46C165/6/7/8

Online Datasheet

Features:

- Temporal Horn Pattern or Continuous Tone
- Alarm Memory
- Sensitivity Control Times:
  - 9 minutes (RE46C165/6)
  - 1.2 minutes (RE46C167/8)
- I/O Filter and Charge Dump
- Interconnect up to 40 Detectors
- Internal Power-on Reset
- >2000V ESD Protection (HBM) on All Pins
- Low Quiescent Current Consumption (<8 µA)
- Internal Low Battery Detection and Chamber Test
- RoHS Compliant Lead-Free Packaging: PDIP, SOIC

Functional Block Diagram

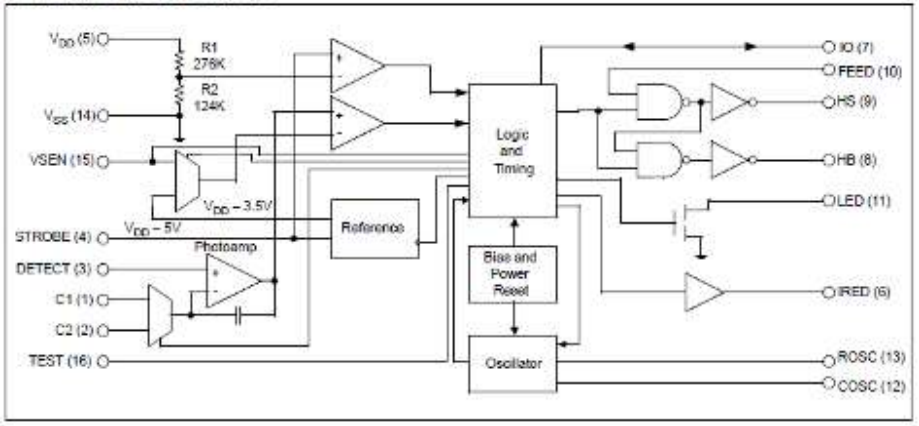

Typical Application

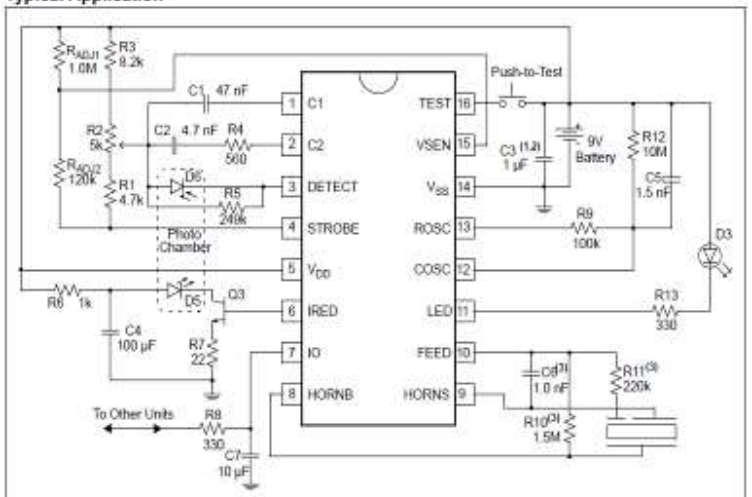

Note 1: C3 should be located as close as possible to the device power pins.

2: C3 is typical for an alkaline battery. This capacitance should be increased to 4.7 µF or greater for a carbon battery.

3: R10, R11 and C6 are typical values and may be adjusted to maximize sound pressure.

<< BACK

RE46C162/3

Online Datasheet

Features:

- Pin Selectable Horn Patterns:
  Temporal or Continuous Horn Patterns
- Alarm Memory
- Sensitivity Control Timer:
  - 8 minute Timer for RE46C162
  - 1 minute Timer for RE46C163
- >1500V ESD Protection (HBM) on All Pins
- Guard Outputs for Ion Detector Input
- ±0.75 pA Detect Input Current
- Internal Reverse Battery Protection
- Low Quiescent Current Consumption (<6.5 µA)
- I/O Filter and Charge Dump
- Internal Low Battery Detection
- Power-up Low Battery Test
- Interconnect up to 66 Detectors
- RoHS Compliant, Lead Free Packaging: PDIP

RE46C162 Typical Application – Temporal Horn Pattern

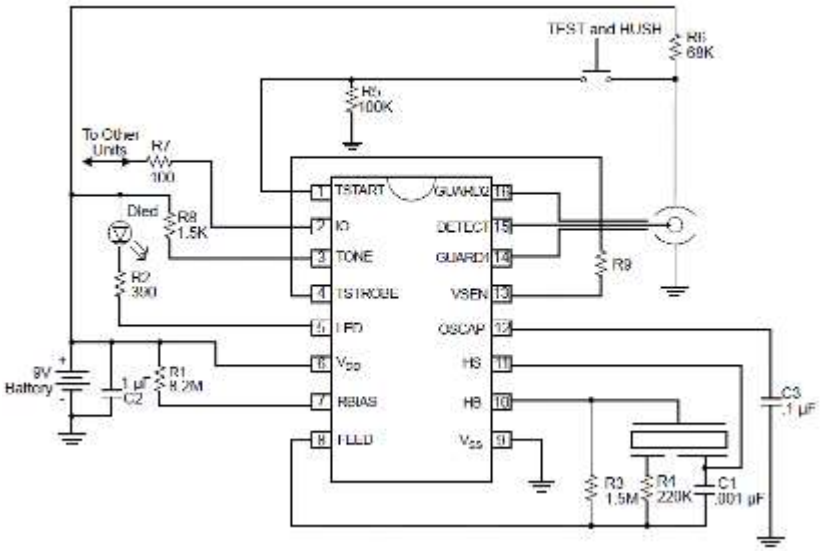

Functional Block Diagram

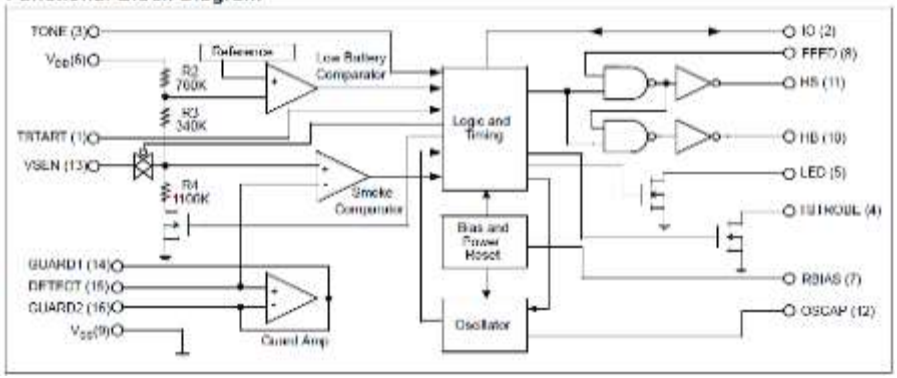

<< BACK

RE46C129

Online Datasheet

Features:

- Guard Outputs for Ion Detector Input
- ±0.75pA Detect Input Current
- Internal Reverse Battery Protection
- Low Quiescent Current Consumption (<6.5µA)
- Available in 16-lead PDIP or 16-lead SOIC
- ESD Protection on all Pins
- Internal Low Battery Detection
- Interconnect up to 40 Detectors

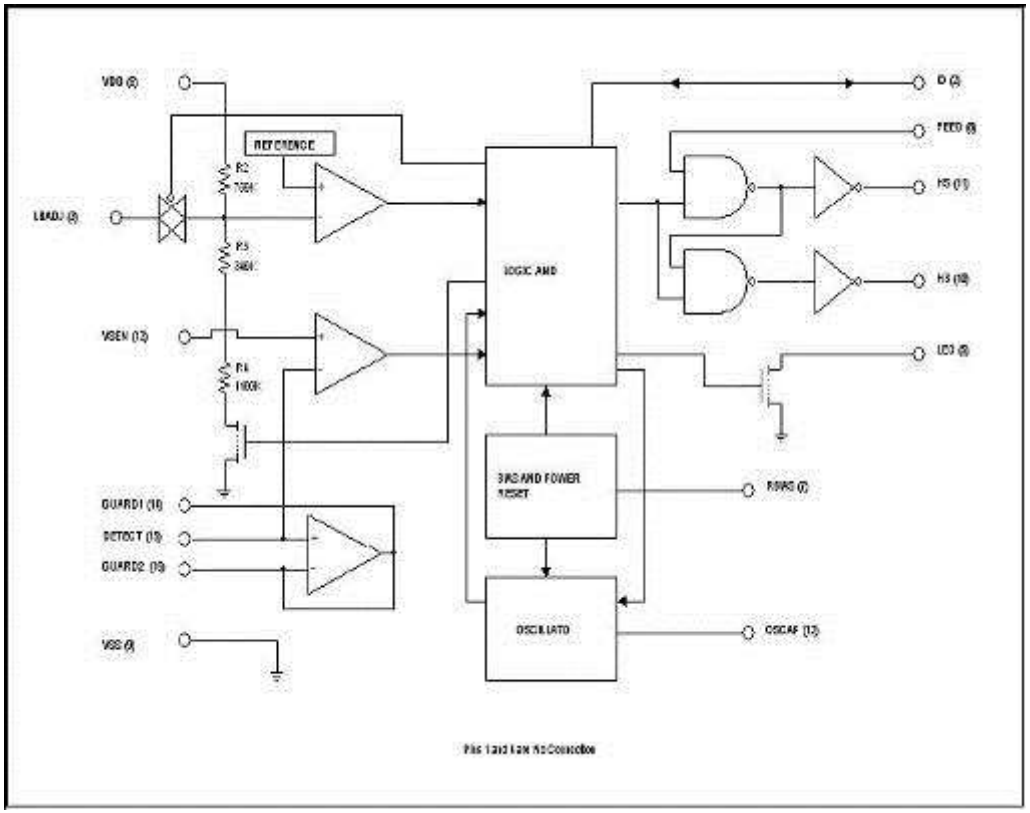

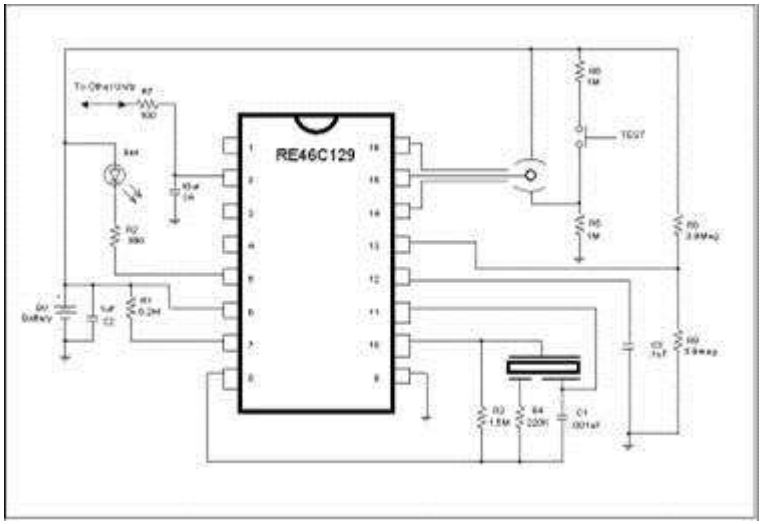

<< BACK

RE46C152

Online Datasheet

Features:

- >1500V ESD Protection (HBM) on all Pins
- Guard Outputs for Ion Detector Input
- ±0.75pA Detect Input Current
- Internal Reverse Battery Protection
- Low Quiescent Current Consumption (<6.5µA)
- Available in 16-lead PDIP package
- Internal Low Battery Detection
- Power Up Low Battery Test
- Interconnect up to 40 Detectors
- Pin selectable horn patterns
- 8 Minute Timer for Sensitivity Control

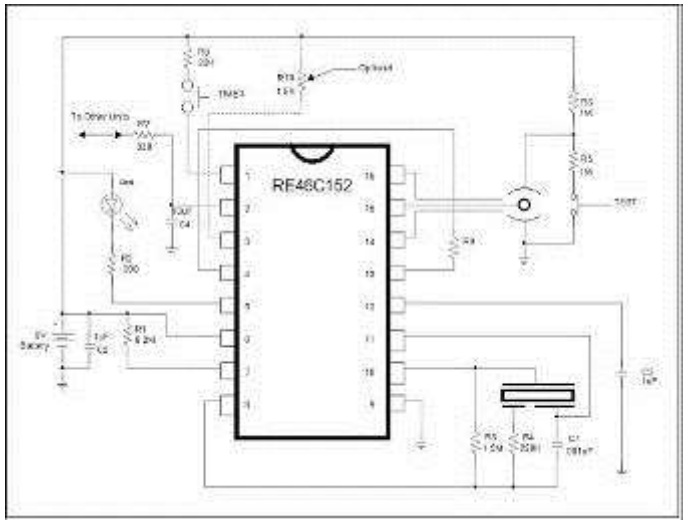

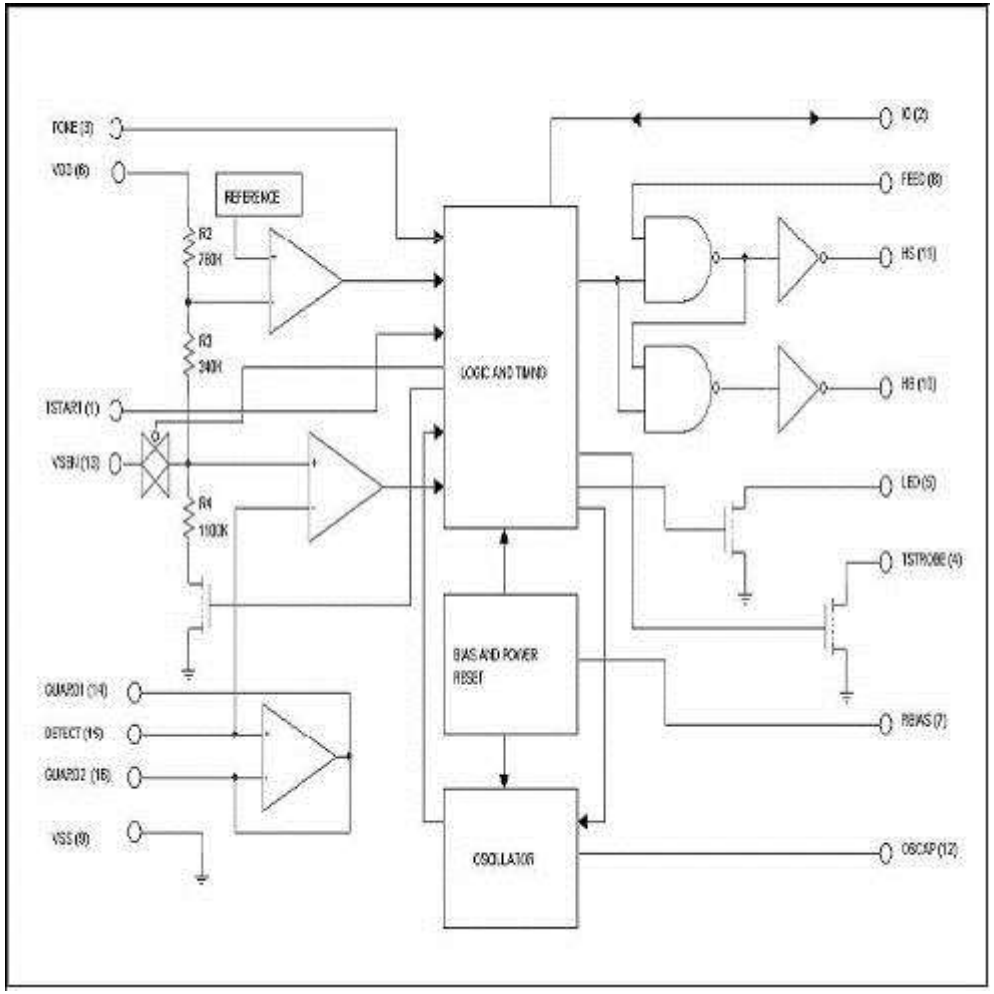

<< BACK

RE46C112

Online Datasheet

Features:

- Guard Outputs for Ion Detector Input
- ±0.75pA Detect Input Current
- Microprocessor A/D Compatible Analog Output
- Low Quiescent Current Consumption (<10µA)
- Available in 8-lead PDIP or 8-lead SOIC
- 2000V ESD Protection (HBM)

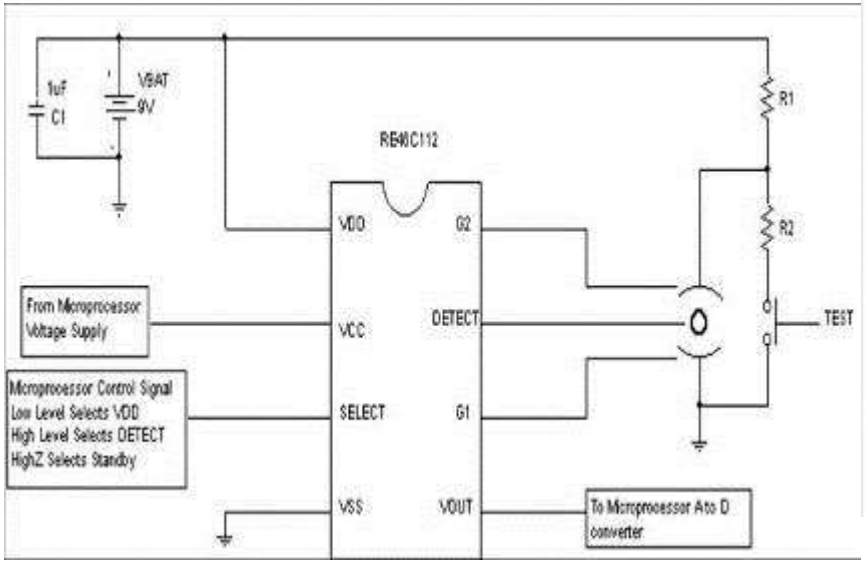

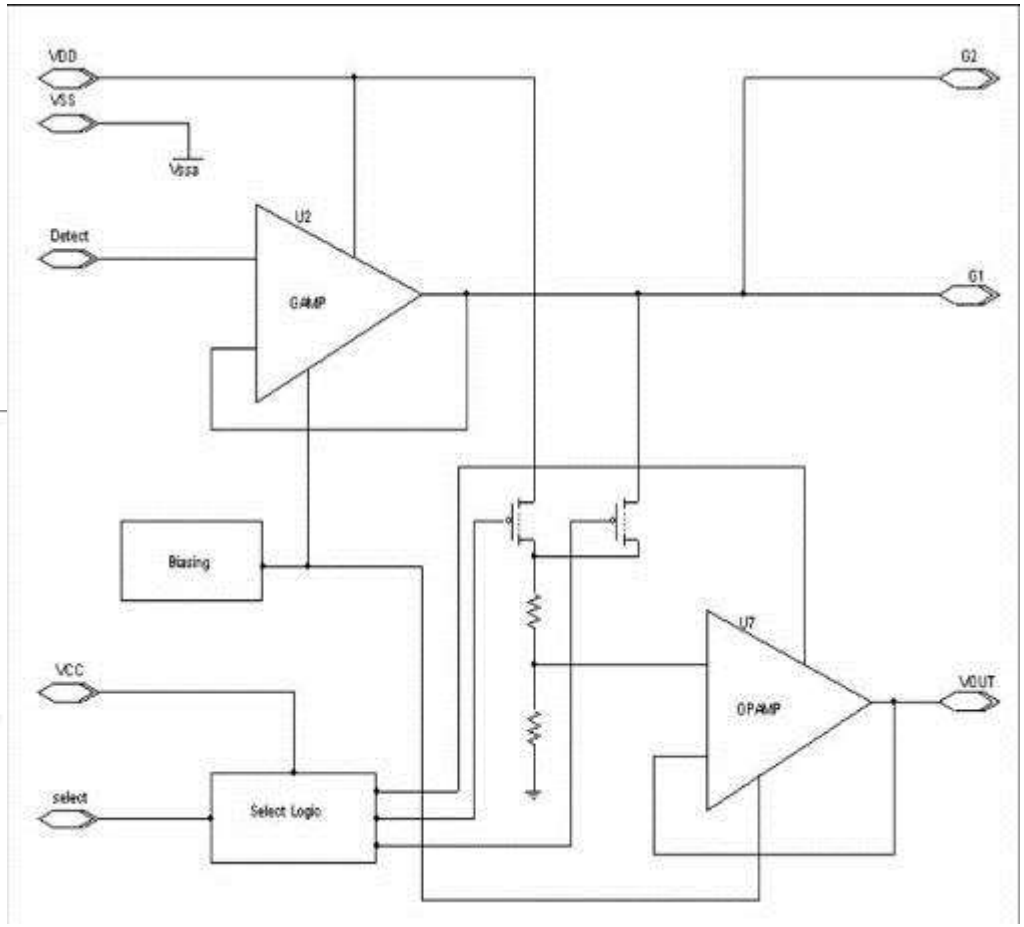

<< BACK

RE46C114

Online Datasheet

Features:

- Guard Outputs for Ion Detector Input
- ±0.75pA Detect Input Current
- Microprocessor A/D Compatible Analog Output
- Low Quiescent Current Consumption (<10µA)
- Available in 8-lead PDIP or 8-lead SOIC
- 2000V ESD Protection (HBM)

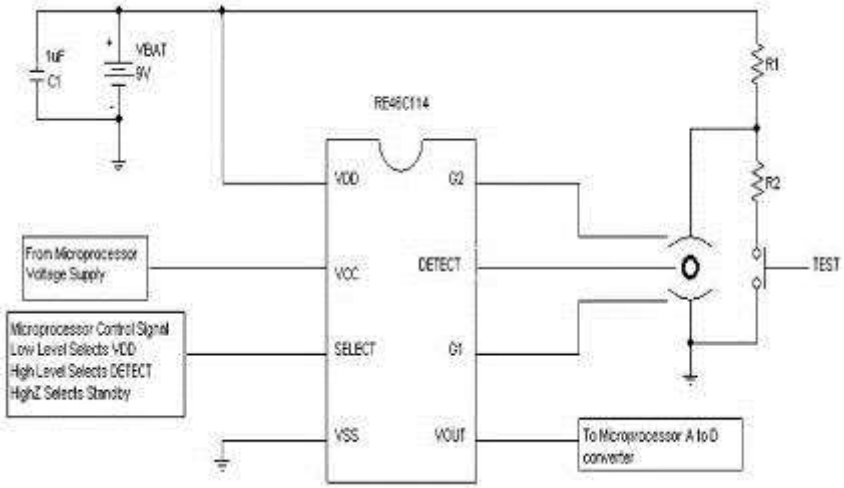

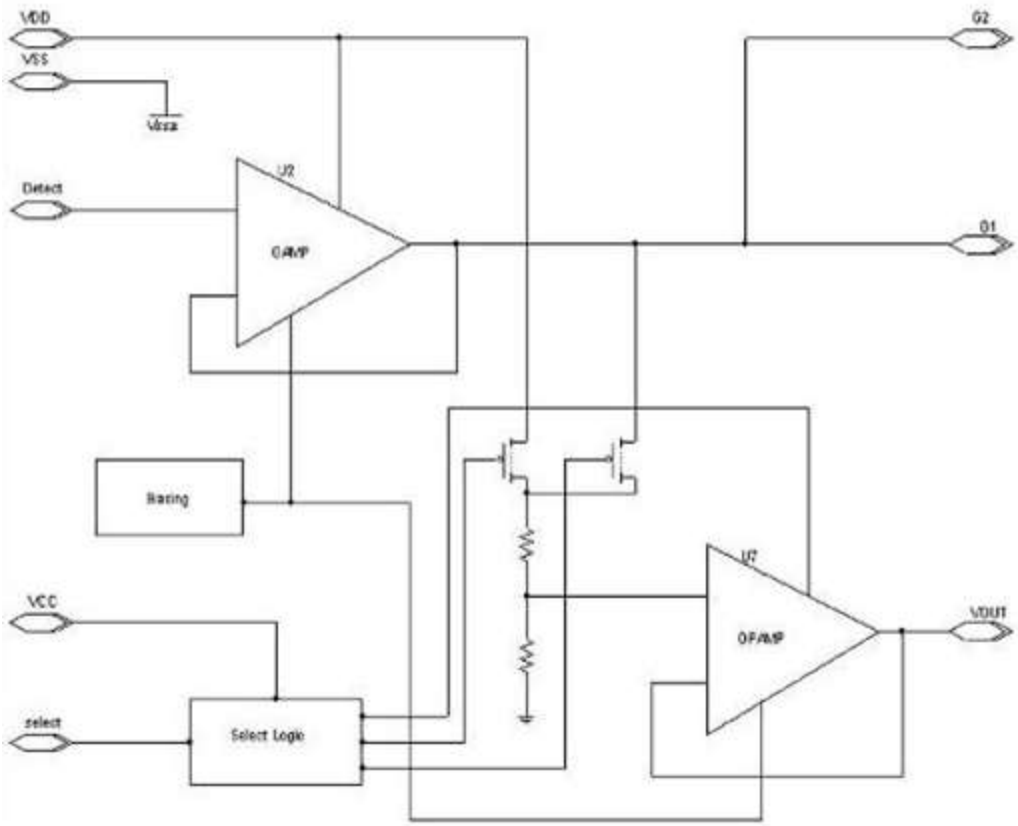

<< BACK

RE46C311/12

Online Datasheet

Features:

- Low Quiescent Current: 600 nA/Amplifier (typical)
- Rail-to-Rail Input/Output
- Gain Bandwidth Product: 10 kHz (typical)
- Wide Supply Voltage Range: 1.8V to 5.5V
- Unity Gain Stable
- Temperature Ranges: -10°C to +60°C
- Single: RE46C311
- Dual: RE46C312

Typical Application

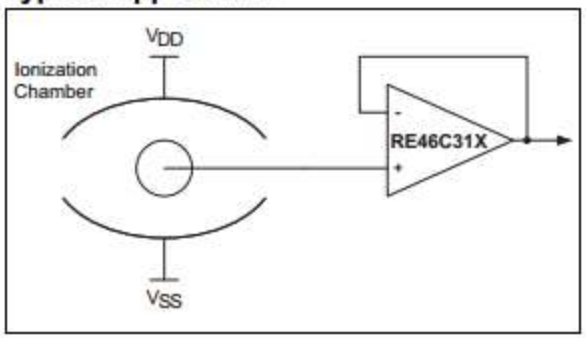

Package Types

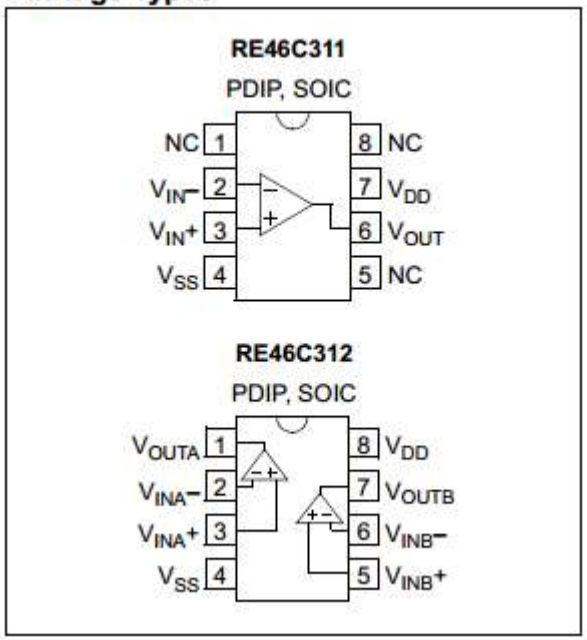

<< BACK

RE46C140

Online Datasheet

Features:

- Internal Power On Reset
- Low Quiescent Current Consumption
- Available in 16-lead PDIP or SOIC
- ESD Protection on all Pins
- Interconnect up to 40 Detectors
- 10 Minute Timer for Sensitivity Control
- Temporal Horn Pattern
- Internal Low Battery and Chamber Test

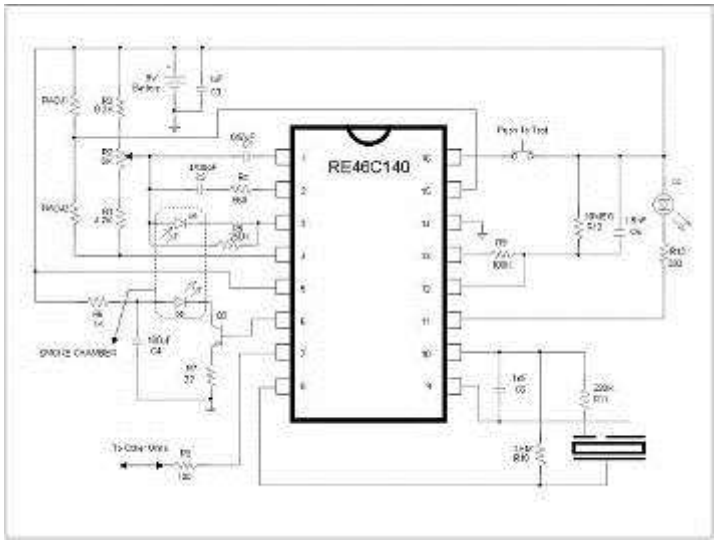

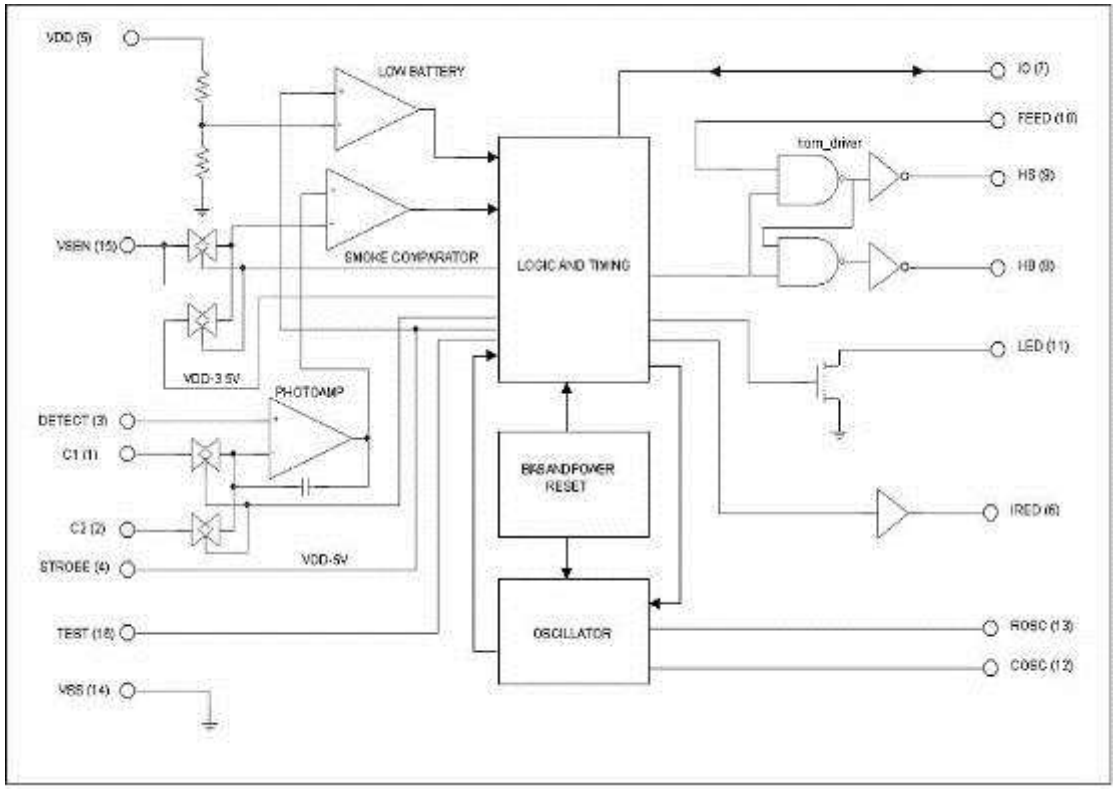

<< BACK

RE46C141

Online Datasheet

Features:

- Internal Power On Reset
- Low Quiescent Current Consumption
- Available in 16-lead PDIP or SOIC
- ESD Protection on all Pins
- Interconnect up to 40 Detectors
- Temporal Horn Pattern
- Low Battery and Chamber Test

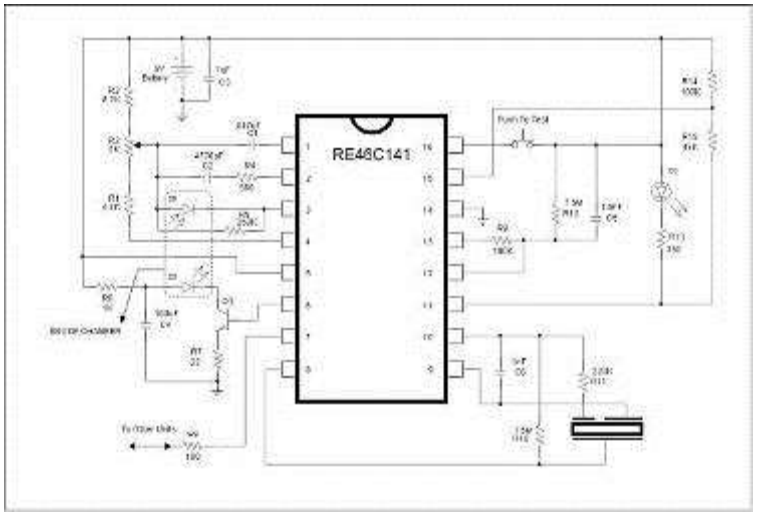

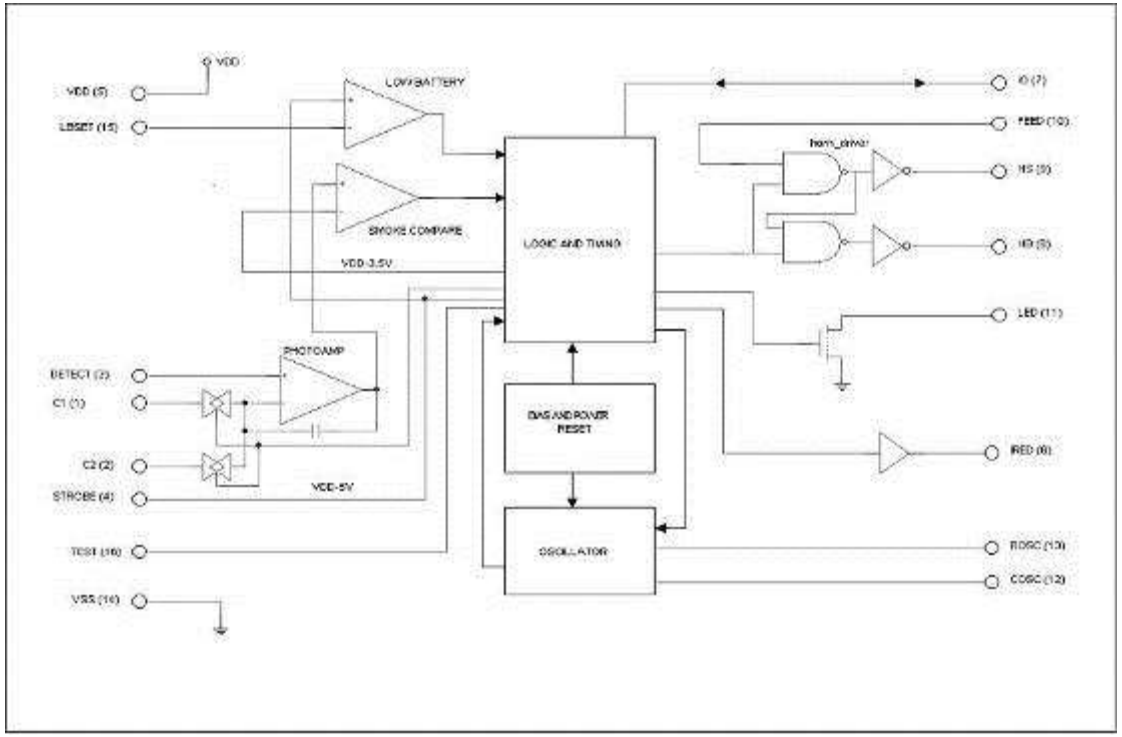

<< BACK

RE46C143

Online Datasheet

Features:

- Internal Power On Reset
- Low Quiescent Current Consumption
- Available in 16-lead PDIP or SOIC
- ESD Protection on all Pins
- Interconnect up to 40 Detectors
- Continuous Horn Pattern
- Low Battery and Chamber Test

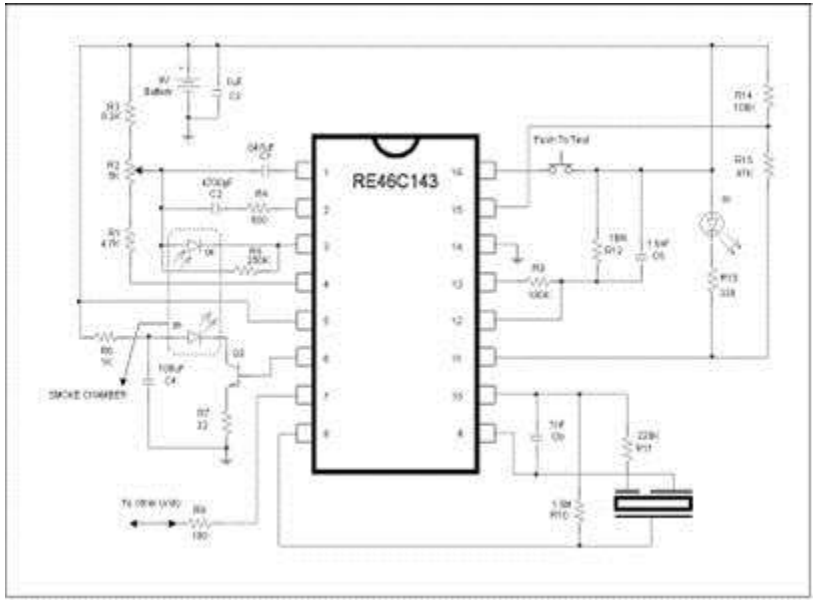

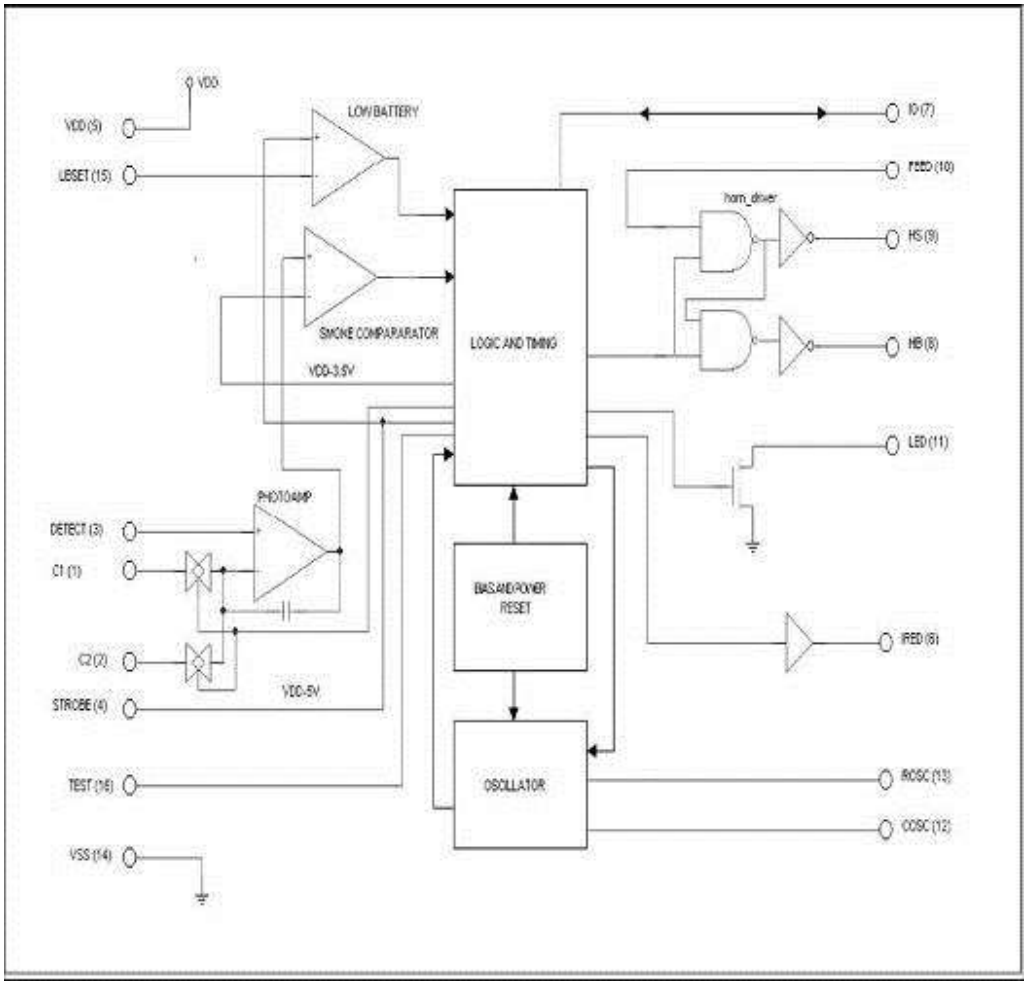

<< BACK

RE46C144

Online Datasheet

Features:

- Internal Power On Reset
- Low Quiescent Current Consumption
- Available in 16-lead PDIP or SOIC
- ESD Protection on all Pins
- Interconnect up to 40 Detectors
- 10 Minute Timer for Sensitivity Control
- Continuous Horn Pattern
- Internal Low Battery and Chamber Test

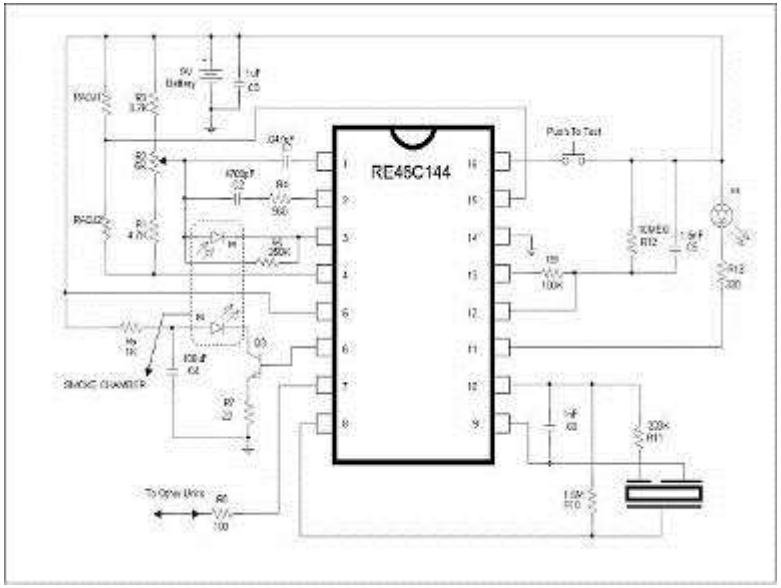

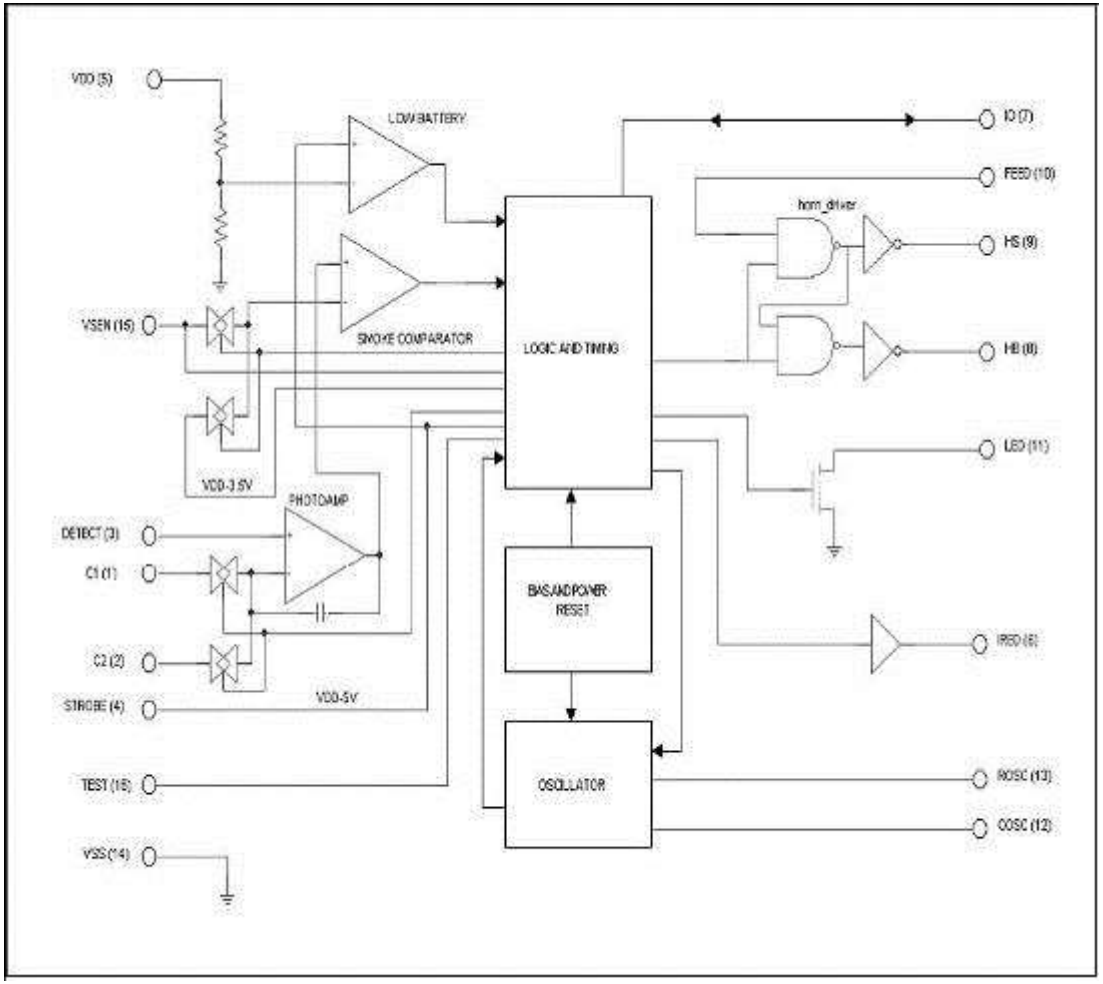

<< BACK

RE46C145

Online Datasheet

Features:

- Internal Power On Reset
- Low Quiescent Current Consumption
- Available in 16-lead PDIP or SOIC
- ESD Protection on all Pins
- Interconnect up to 40 Detectors
- 10 Minute Timer for Sensitivity Control
- Temporal Horn Pattern
- Internal Low Battery and Chamber Test
- Alternate Diagnostic Mode

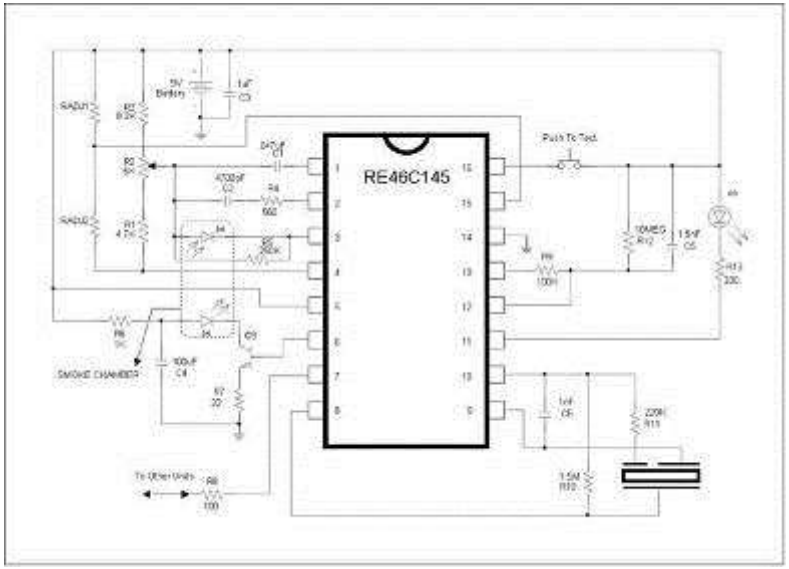

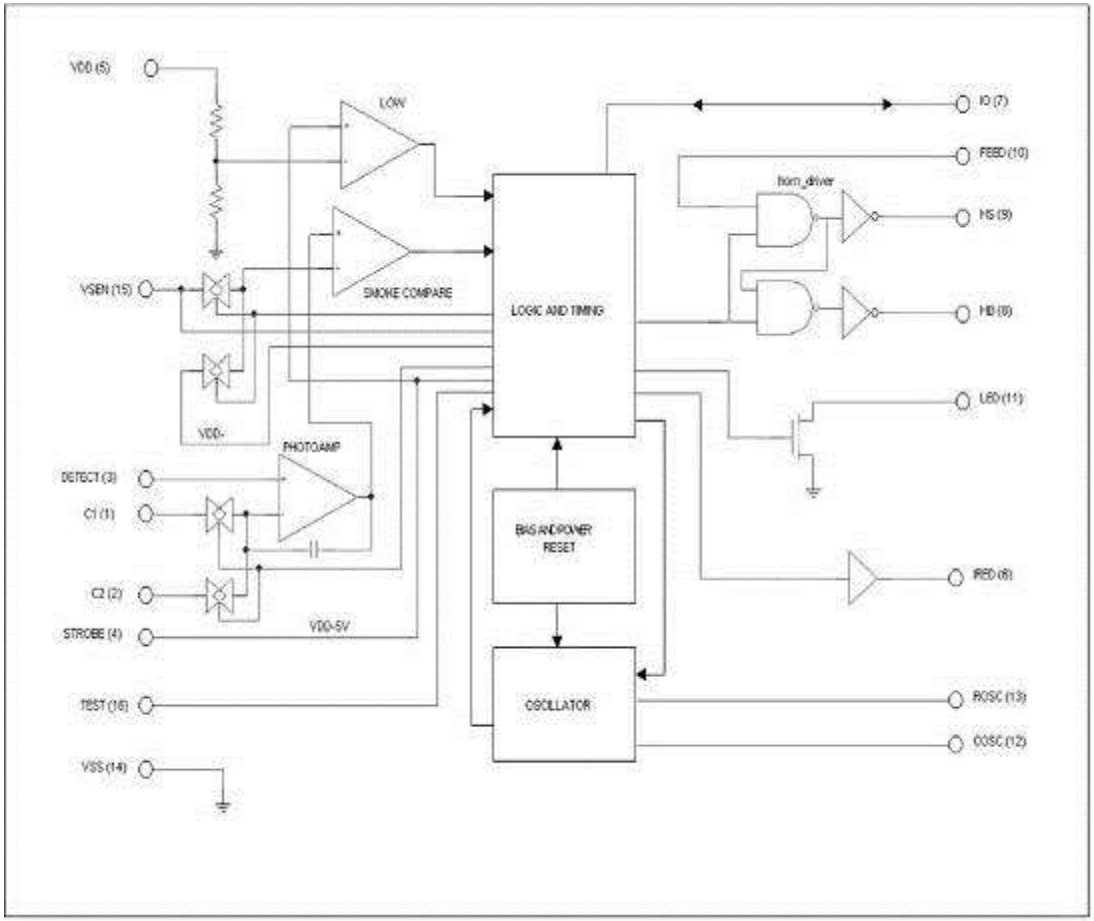

<< BACK

RE46C191

Contact Marketing

Features:

- Two AA battery Operation
- Low Quiescent Current Consumption
- Programmable IRED Current
- Programmable Photo Amplifier
- 6-Bit ADC
- Programmable Smoke Alarm Levels
- Long Term Drift Adjustment
- 9 Minute Timer for Sensitivity Control
- Chamber Test with Programmable Alarm Level
- Low Battery Test with Programmable Threshold
- Interconnect up to 40 Detectors
- Local Alarm Memory
- Temporal or Continuous Horn Pattern
- 10 Year End of Life Indicator
- Pin-for-Pin Compatible with the RE46C190
- Contact MSLD Marketing datasheet and additional information

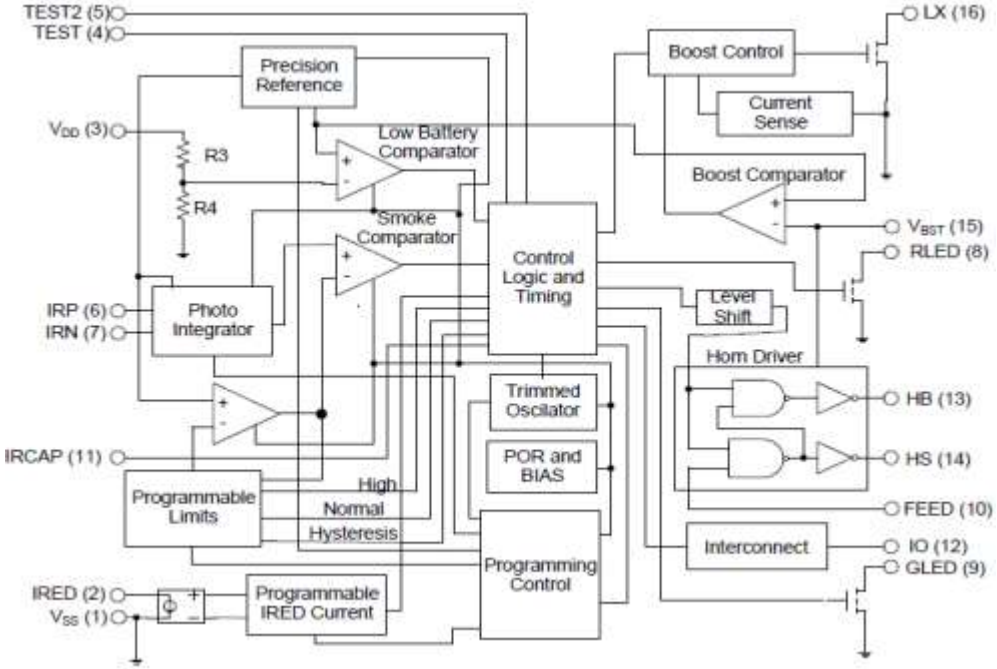

<< BACK

RE46C200

Contact Marketing

Features:

- 6.5 - 12V Operation
- Low Quiescent Current
- Programmable IRED Current
- Programmable Photo Amplifier
- Programmable Alarm Levels
- 6-Bit ADC
- Long Term Drift Adjustment
- Programmable Low Battery Test
- Programmable Low Battery Hush
- Programmable Horn Pattern
- Horn Synchronization
- Automatic Alarm Locate
- 10-year End-of-Life Indication
- Local Alarm Memory
- Smart IO for CO alarm option
- 9 Minute or 80 Second Hush Timer
- Smart HUSH option
- Contact MSLD Marketing datasheet and additional information

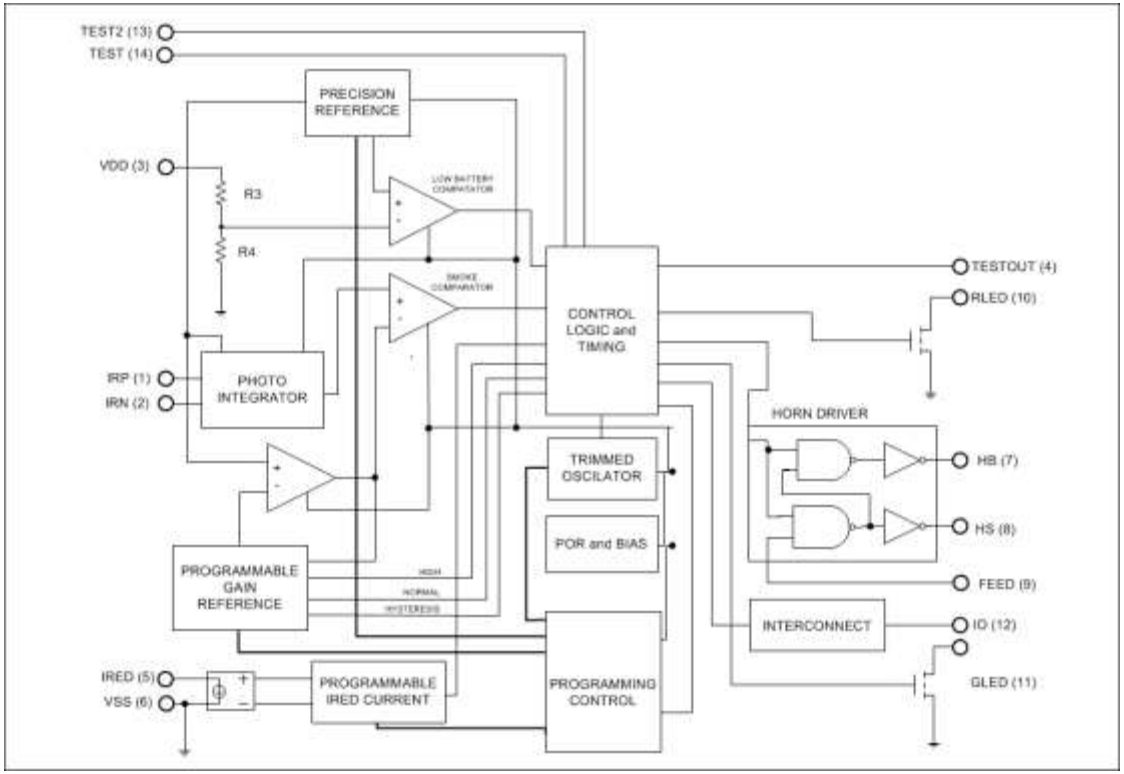

<< BACK

RE46C180

Online Datasheet

Features:

- 6 – 12V Operation
- Low Quiescent Current Consumption
- Programmable Standby Sensitivity
- Programmable HUSH Sensitivity
- Programmable Hysteresis
- Programmable Chamber Voltage for Push-to-Test (PTT) and Chamber Test
- Programmable ±150 mV Low Battery Set Point
- Internal Ionization Chamber Test
- Internal Low Battery Test
- Internal Power-On Reset and Power-up Low
- Alarm Memory
- Auto Alarm Locate
- Horn Synchronization
- IO Filter and Charge Dump
- Smart Interconnect, up to 40 Detectors
- ±5% All Internal Oscillator
- 9 Minute or 80 Second Timer for Sensitivity Control
- Temporal or Continuous Horn Pattern
- Guard Outputs for Ion Detector Input
- ±0.75 pA Detect Input Current
- 10-year End-of-Life Indication

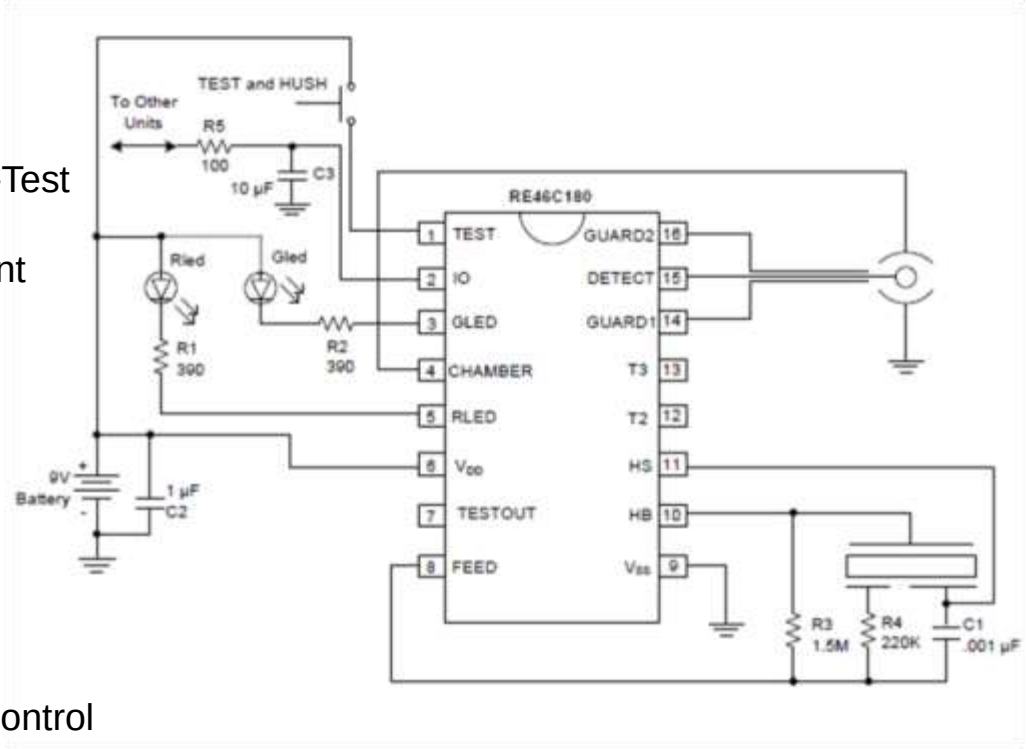

<< BACK

RE46C800

Online Datasheet

Features:

- Low Quiescent Current
- Operation from 2V to 12V
- 9.8V Boost Regulator
- Horn Driver
- LED Driver
- Bidirectional Interconnect
- 3.3V Regulator
- Internal Operation Amplifiers
  - ±1mV Input Offset
  - Rail to Rail Input and Output
  - 10kHz Gain Bandwidth Product
  - Unity Gain Stable
- Package: 20-lead SSOP

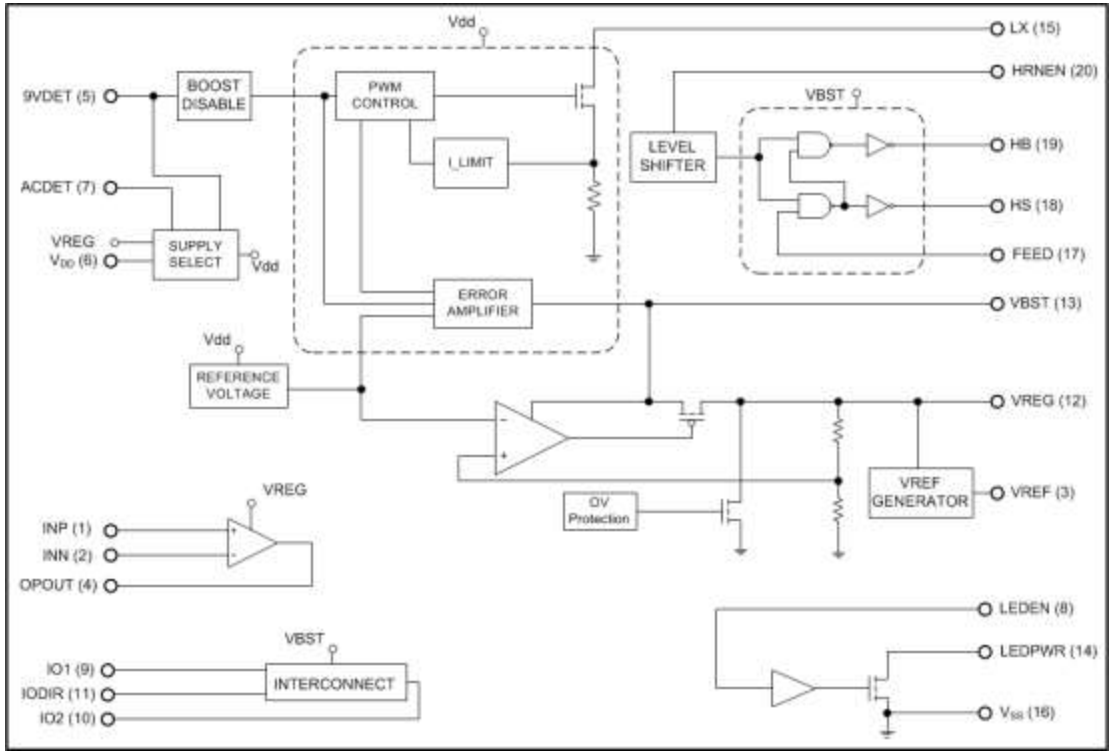

<< BACK

MTS62C19A/MTS2916A

Online Datasheet

Features:

- Able to drive both windings of a bipolar stepper motor
- Load voltage supply range: 10V to 40V
- Output current upto 750mA (each bridge)
- Internal fixed Toff time PWM current control
- Built-in protection diodes
- Internal thermal shutdown
- Under-voltage lockout
- LS-TTL compatible logic inputs with pull up resistors
- Low Ron output resistance
- Low quiescent current

Typical Application

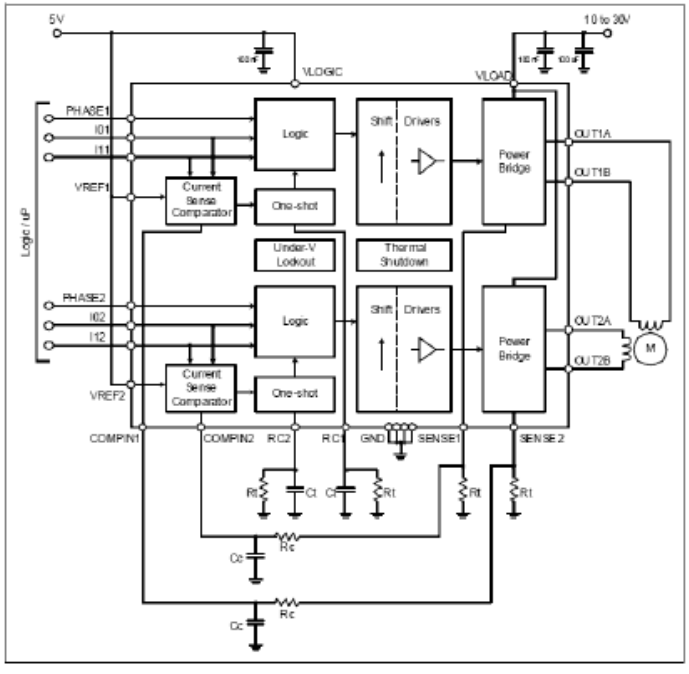

SOP-24

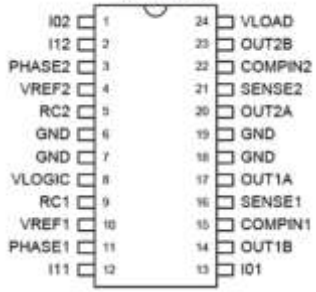

SOP-24

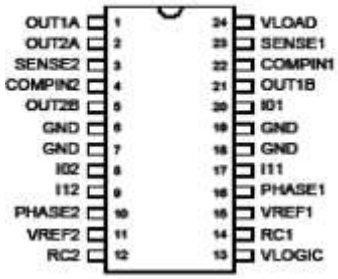

<< BACK

MTD6501C/D/G

Online Datasheet

Features:

- Position sensorless BLDC drivers (no Hall sensor required)
- 180° sinusoidal drive, for high efficiency and low acoustic noise
- Support 2V to 14V power supplies
- Speed control through PAM and/or PWM
- Built-in frequency generator
- Built-in lockup protection and automatic recovery circuit (external capacitor not necessary)
- Built-in over current limitation and short circuit protection
- Built-in thermal shutdown protection
- No external tuning required
- Boost Mode (Optional BEMF Pre-Amplification in MTD6501D)
- 20 kHz (MTD6501C/D), 23 kHz (MTD6501G)

Typical Application – Fan Motor Driver Using the MTD6501D

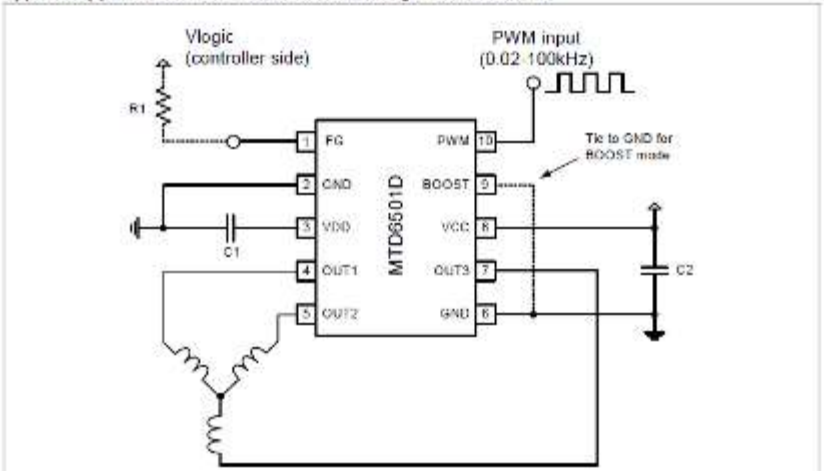

Recommended External Components for Typical Application

Element	Type/Value	Comment
C1	≥1 µF	Connect as close as possible to IC input pins
C2	≥1 µF	Connect as close as possible to IC input pins
R1	≥10 kΩ	Connect to Vlogic on controller side

MTD6501C, MTD6501G
SOP-8

MTD6501D
MSOP

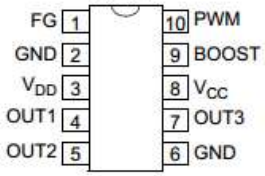

<< BACK

MTD6502B

Online Datasheet

Features:

- Position Sensorless BLDC Drivers (No Hall Sensor Required)
- 180° Sinusoidal Drive for High Efficiency and Low Acoustic Noise
- Support 2V to 5.5V Power Supplies
- Direction Control:
- - Forward direction: connect DIR pin to GND or leave floating
- - Reverse direction: connect DIR pin to VDD
- Speed Control through Power Supply Modulation (PSM) and/or Pulse-Width Modulation (PWM)
- Built-in Frequency Generator (FG Output Signal)
- Built-in Lock-up Protection and Automatic
- Recovery Circuit (External Capacitor not Necessary)
- Built-in Over Current Limitation
- Built-in Thermal Shutdown Protection
- No External Tuning Required
- 10-lead 3x3 TDFN
- Extended Temperature Range: -40°C to +125°C

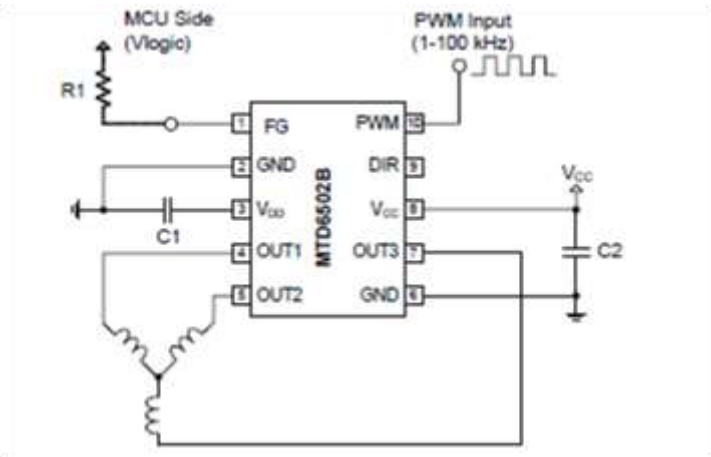

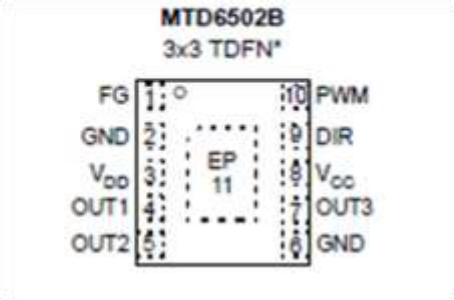

<< BACK

MTD6505

Online Datasheet

Features:

- 180° Sinusoidal Drive
  - high efficiency and low acoustic noise
- Position Sensorless BLDC Drivers
- Integrated Power Transistors
- Supports 2V to 5.5V Power Supplies
- Programming Resistor (RPROG) setting to fit motor constant (Km) range from 3.25 mV/Hz to 52 mV/Hz
- Direction Control:
- Speed Control through Power Supply Modulation (PSM) and/or Pulse-Width Modulation (PWM)
- Built-in Frequency Generator (FG Output Signal)
- Built-in Lockup Protection and Automatic Recovery Circuit
- Built-in Overcurrent Limitation
- Built-in Thermal Shutdown Protection
- Built-in Over Voltage Protection
- No External Tuning Required
- Extended Temperature Range: -40°C to +125°C
- 10-Lead 3mm x 3mm UDFN

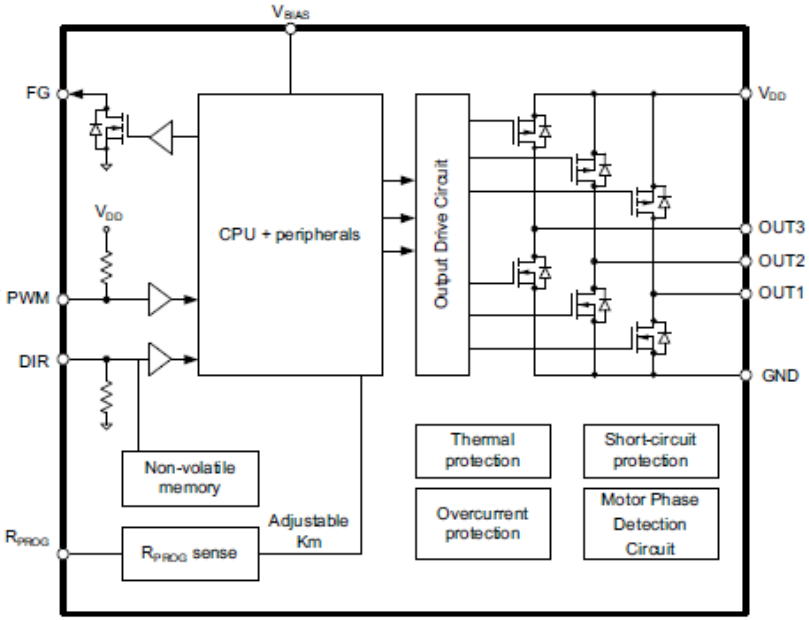

MTD6505
3x3 UDFN*

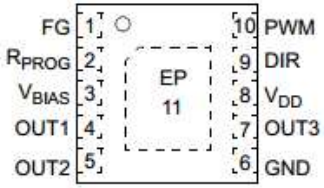

<< BACK

MTD6508

Online Datasheet

Features:

- Start-up output current controlled by PWM
- Output PWM Slew Rate Control (Adj. version)
- Phase Target Selection for Regulation (Adj. Version)
- Start-up Strength Selection (Adj. Version)
- 180° Sinusoidal Drive
  - High efficiency and low acoustic noise
- Position Sensorless BLDC Drivers
  - No Hall-effect sensor required)
- Integrated Power Transistors
- 2V to 5.5V Operating Voltage
- Programming Resistor (RPROG) setting to fit motor constant (Km), from 3.25 mV/Hz to 52 mV/Hz
- Direction Control
- Speed Control through Power Supply Modulation (PSM) and/or Pulse-Width Modulation (PWM)
- Frequency Generator (FG Output Signal)
- Lockup Protection and Automatic Recovery Circuit
- Overcurrent Limitation
- Thermal Shutdown Protection

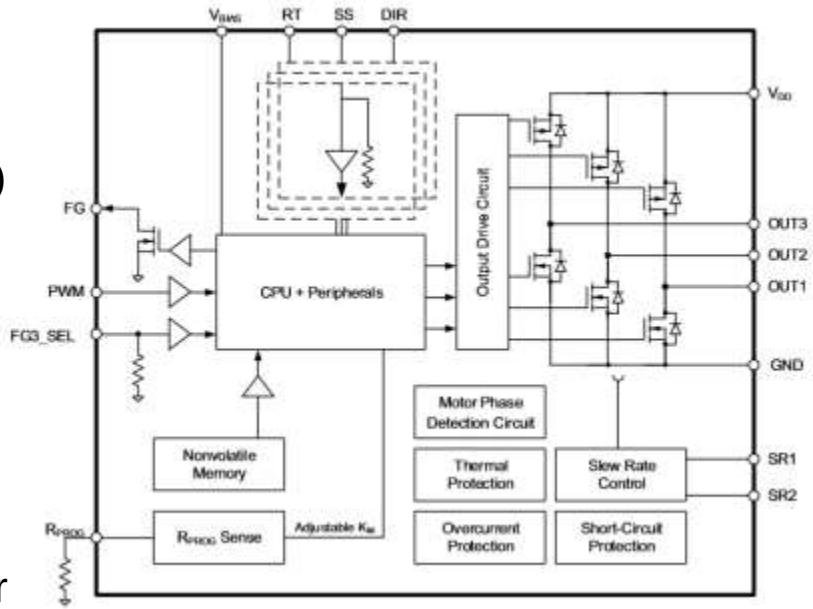

MTD6508
3x3 UDFN-10*

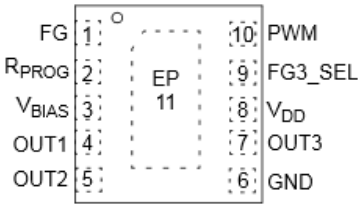

MTD6508
4x4 UQFN-16*

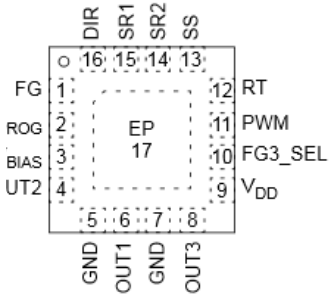

<< BACK

MCP8024

Online Datasheet

Features:

- Three Half-bridge Drivers Configured to Drive External High-Side NMOS and Low-Side NMOS MOSFETs:
  - Independent input control for high-side NMOS and low-side NMOS MOSFETs
  - Peak output current: 0.5A @ 12V
  - Shoot-through protection
  - Overcurrent and short circuit protection
- Adjustable Output Buck Regulator (750 mW)
- Two LDOs: 5V @ 20 mA / 12V @ 20 mA
- Internal Bandgap Reference
- Three Operational Amplifiers for Motor Phase Current Monitoring and Position Detection
- Overcurrent Comparator and Thermal Shutdown
- Two Level Translators
- Input Voltage Range: 6 - 40V
- Operational Voltage Range: 6 - 28V
- Undervoltage Lockout (UVLO): 6V
- Overvoltage Lockout (OVLO): 28V
- Transient (100 ms) Voltage Tolerance: 48V
- Temperature Range: -40 to +150°C (H-Temp)

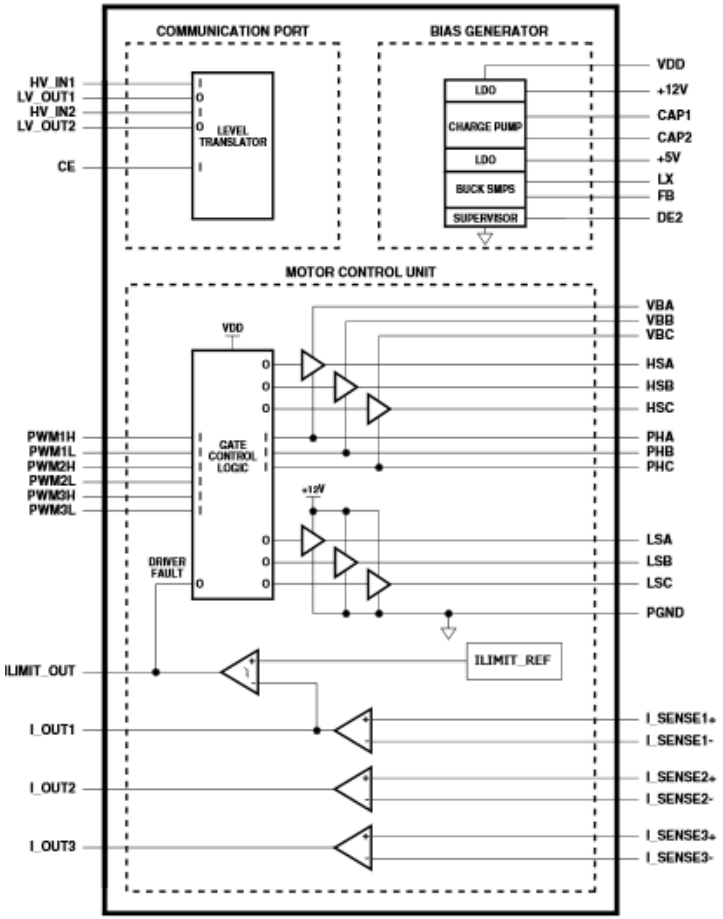

<< BACK

MCP8025

Online Datasheet

Features:

- LIN Transceiver Interface: Compliant with LIN Bus Specifications 1.3, 2.2, and SAE J2602
- Three Half-bridge Drivers Configured to Drive External High-Side NMOS and Low-Side NMOS MOSFETs:
  - Independent input control for high-side NMOS and low-side NMOS MOSFETs
  - Peak output current: 0.5A @ 12V
  - Shoot-through protection
  - Overcurrent and short circuit protection
- Adjustable Output Buck Regulator (750 mW)
- Two LDOs: 5V @ 30 mA / 12V @ 30 mA
- Buck Regulator Undervoltage Lockout: 4.0V
- One Operational Amplifiers for Motor Phase Current Monitoring and Position Detection
- Overcurrent Comparator and Thermal Shutdown
- Operational Voltage Range: 6 - 19V
- Undervoltage Lockout (UVLO): 5.5V
- Overvoltage Lockout (OVLO): 20V
- Transient (100 ms) Voltage Tolerance: 48V
- Temperature Range: -40 to +150°C

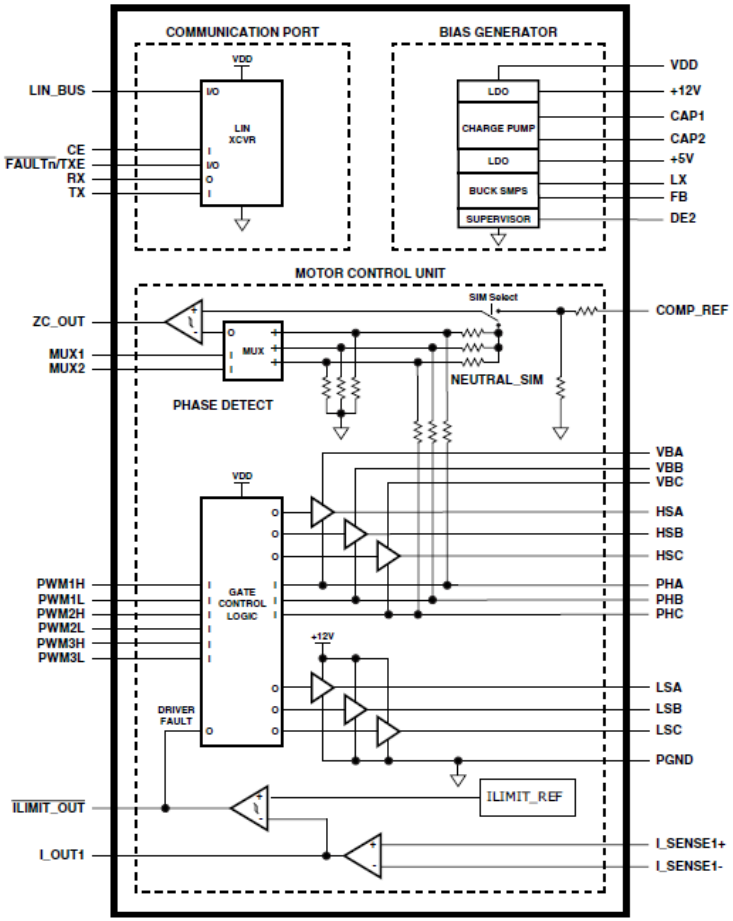

<< BACK

MCP8026

Online Datasheet

Features:

- Three Half-bridge Drivers Configured to Drive External High-Side NMOS and Low-Side NMOS MOSFETs:
  - Independent input control for high-side NMOS and low-side NMOS MOSFETs
  - Peak output current: 0.5A @ 12V
  - Shoot-through protection
  - Overcurrent and short circuit protection
- Adjustable Output Buck Regulator (750 mW)
- Two LDOs: 5V @ 30 mA / 12V @ 30 mA
- Internal Bandgap Reference
- Buck Regulator Undervoltage Lockout: 4.0V
- Three Operational Amplifiers for Motor Phase Current Monitoring and Position Detection
- Overcurrent Comparator and Thermal Shutdown
- Two Level Translators
- Operational Voltage Range: 6 - 28V
- Undervoltage Lockout (UVLO): 5.5V
- Overvoltage Lockout (OVLO): 32V
- Transient (100 ms) Voltage Tolerance: 48V
- Temperature Range: -40 to +150°C

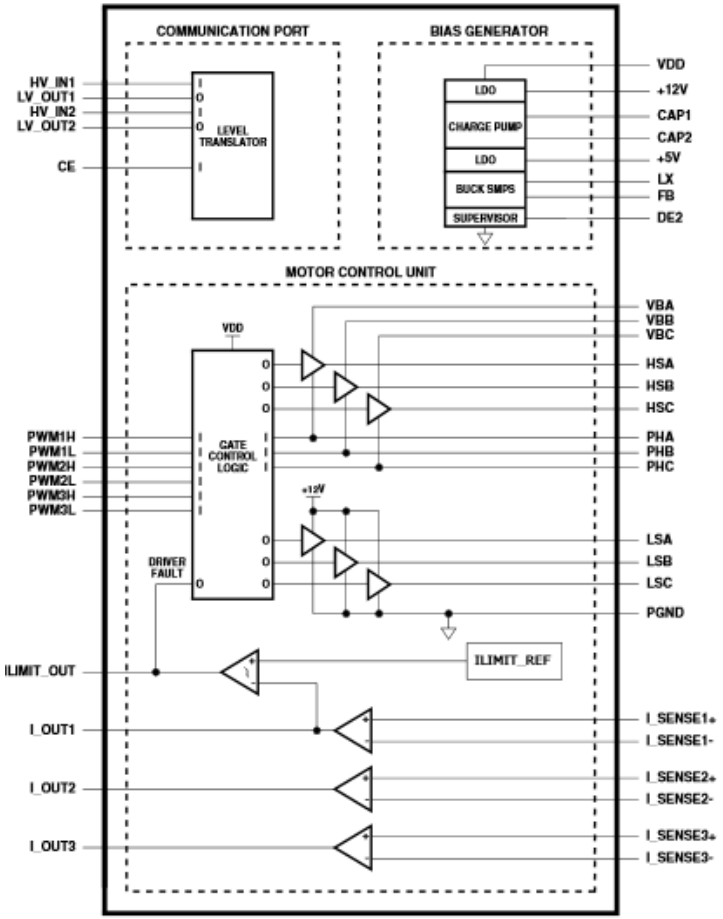

<< BACK

MCP8063

Online Datasheet

Features:

- Automotive AEC-Q100 Qualified
- Position Sensorless BLDC Drivers
  - No Hall Sensor Required
- 23 kHz PWM Output Frequency
- 180° Sinusoidal Drive
  - High Efficiency And Low Acoustic Noise
- Support 2V to 14V Power Supplies
- Speed Control Through Power Supply and/or PWM
- Built-in 1.5A Over Current Limitation
- Built-in Frequency Generator (FG Output Signal)
- Built-in Lock-up Protection and Automatic Recovery Circuit
- Built-in Thermal Shutdown Protection
- No External Tuning Required
- 8-lead 4x4 DFN
- Extended Temperature Range: -40 to +125°C

Functional Block Diagram

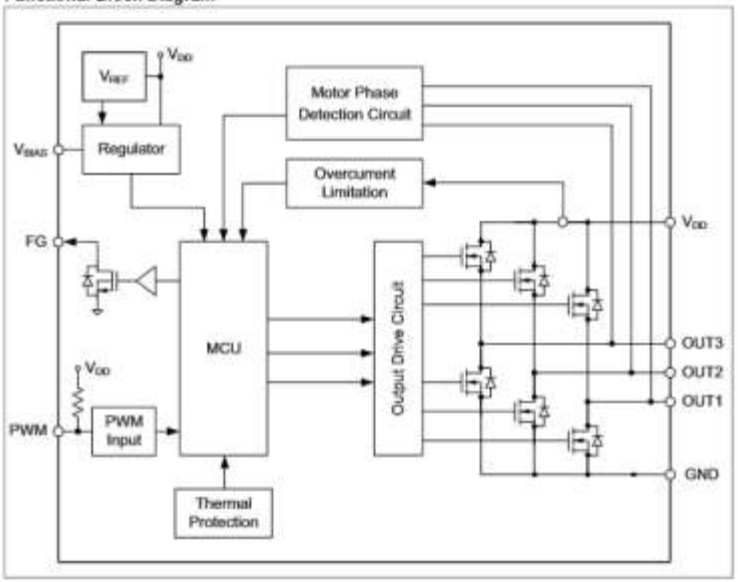

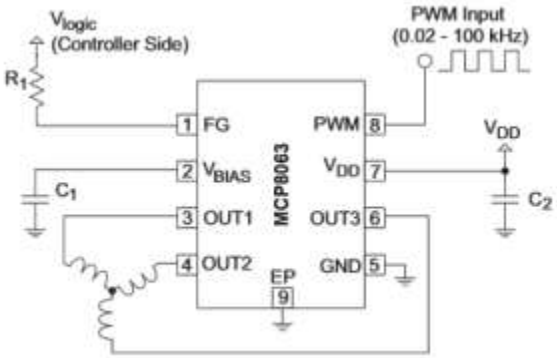

<< BACK

ATA6826C

Online Datasheet

Features:

- Three half-bridge outputs
- Typical loads DC motors, relays, …
- Supply voltage up to 40V
- RDSon typically 0.8Ω, Max 1.5Ω at 150°C
- Up to 1.0A output current
- No shoot-through current
- Quiescent current IS < 2µA
- Outputs short-circuit protected
- Over-temperature protection and pre-warning for each switch
- Undervoltage protection
- Diagnostic: Short circuit, open-load, over-temperature and power-supply fail detection
- SPI, daisy chain capable, up to 2MHz clock frequency
- SO14 package

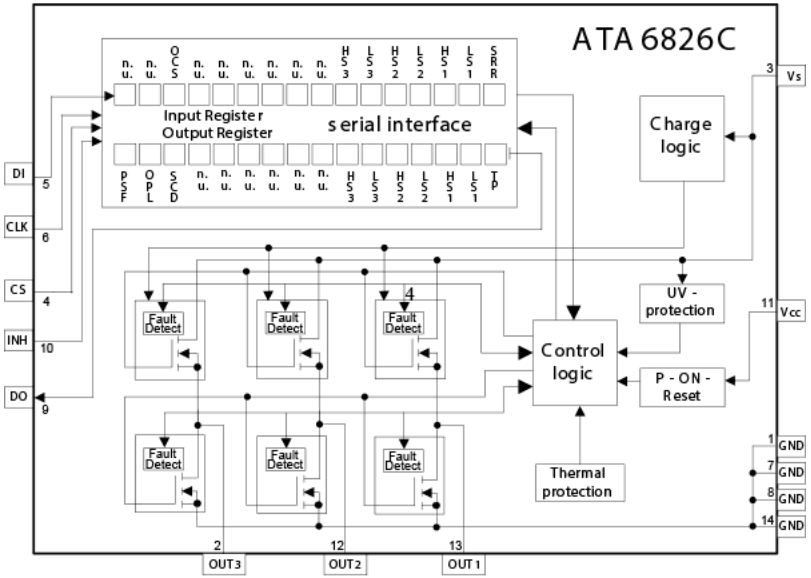

ATA6826C
SO14

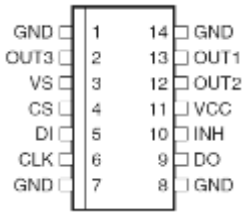

<< BACK

ATA6831C/32C

Online Datasheet

Features:

- Three half-bridge outputs
- Typical loads DC motors, Relays, …
- PWM capability up to 25kHz
- Supply voltage up to 40V
- RDSon typically 0.8Ω, Max 1.5Ω at 150°C
- ATA6832C: High temperature, max Tj 200°C, RDSon Max 1.8Ω at 200°C
- Up to 1.0A output current
- No shoot-through current
- Quiescent current IS < 2µA
- Outputs short-circuit protected
- Over-temperature protection and pre-warning for each switch
- Under-voltage protection
- Diagnostic: Short circuit, open-Load, over-temperature and power-supply fail detection
- SPI, daisy chain capable, up to 2MHz clock frequency
- QFN18 package

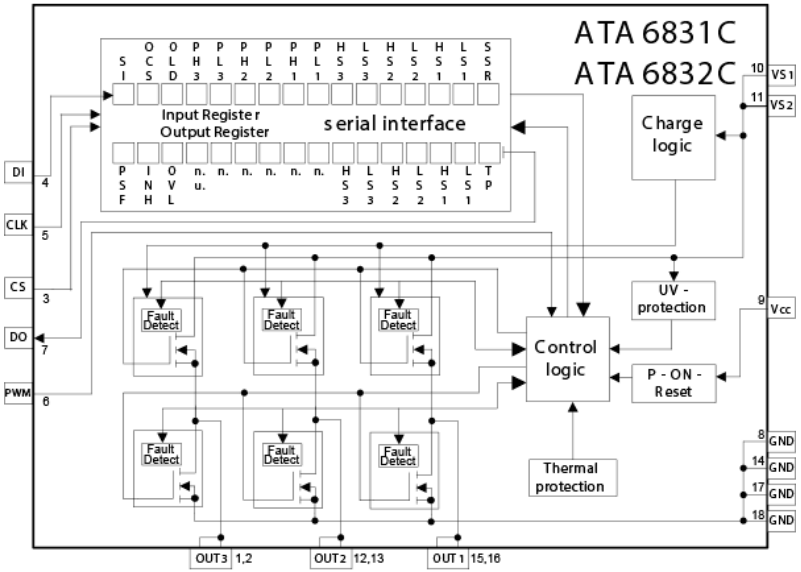

ATA6831C
ATA6832C
QFN18-4x4

<< BACK

ATA6836C/38C

Online Datasheet

Features:

- Six half-bridge outputs
- Typical loads DC motors, relays, …
- Supply voltage up to 40V
- RDSon typically 1.0Ω, Max 1.8Ω at 150°C
- Up to 650mA output current each
- ATA6838C: Up to 950mA output current each
- No shoot-through current
- Quiescent current IS < 2µA
- Outputs short-circuit protected
- Over-temperature protection and pre-warning for each switch
- Under-voltage protection
- Diagnostic: Short circuit, open-load, over-temperature and power-supply fail detection
- SPI, daisy chain capable, up to 2MHz clock frequency
- SO28 or QFN24 power package

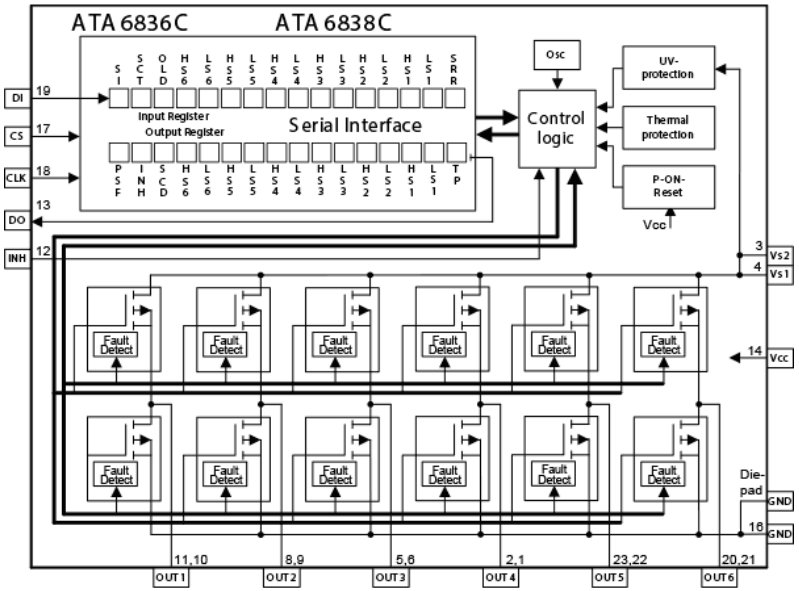

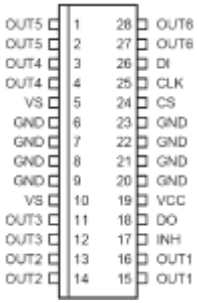

SO28

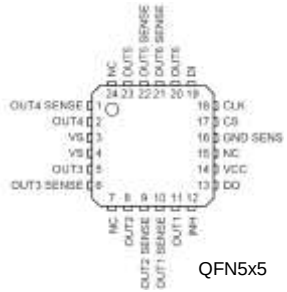

QFN5x5

<< BACK

ATA6823C

Online Datasheet

Features:

- H-bridge motor driver SBC
- PWM and direction control
- Motor operation 7V – 21V
- Integrated charge pump
  - for driving 4 external NMOS transistors
  - for driving reverse protection NMOS transistor
- 5V / 3.3V LDO with current limitation
- Sleep mode current < 45µA
- Wake up via LIN or ignition key (KL15)
- Programmable window watchdog
- Battery over- and under-voltage detection / protection
- Over-temperature warning / protection
- LIN2.1 compliant
- QFN32 package

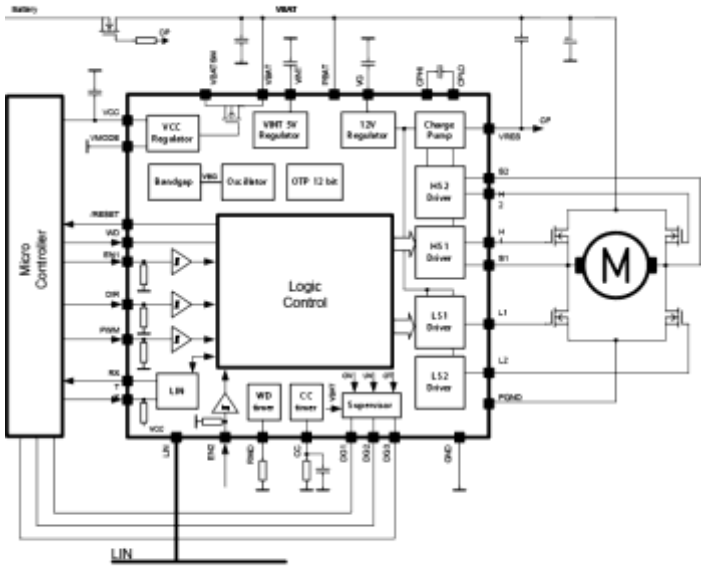

ATA6823C
QFN32-7x7

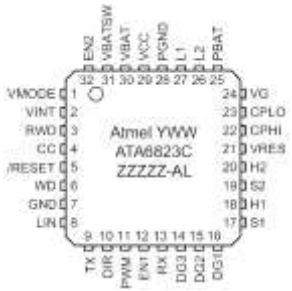

<< BACK

ATA6824C

Online Datasheet

Features:

- H-bridge motor driver SBC
- High temperature max. Tj=200°C
- PWM and direction control
- Motor operation 7V – 21V
- Integrated charge pump
  - for driving 4 external NMOS transistors
  - for driving reverse protection NMOS transistor
- 5V / 3.3V LDO with current limitation
- Programmable window watchdog
- Battery over- and under-voltage detection / protection
- Over-temperature warning / protection
- High voltage serial interface (SIO)
- QFN32 package

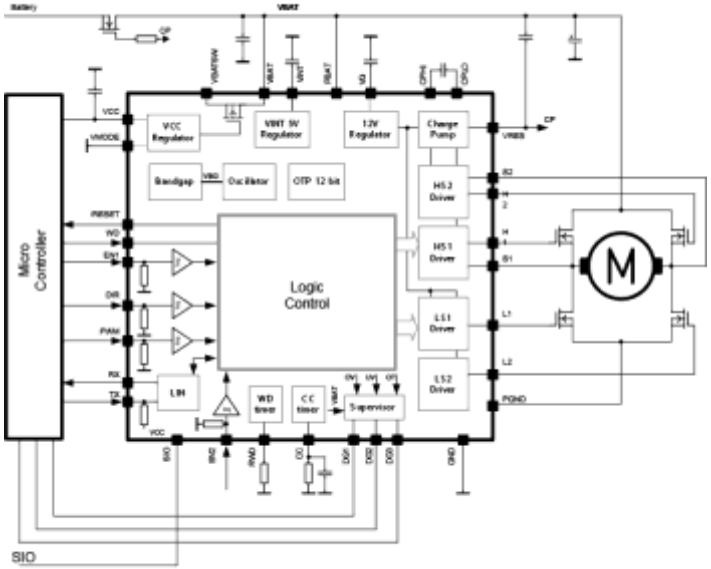

ATA6824C
TQFP32-7x7

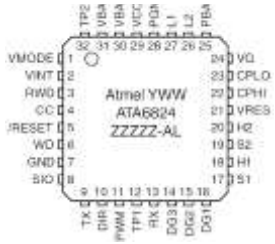

<< BACK

ENC28J60

Online Datasheet

Features:

- IEEE 802.3 compatible Ethernet Controller
- Integrated MAC and 10BASE-T PHY
- Supports one 10BASE-T port with Automatic Polarity Detection and Correction
- Supports Full and Half-Duplex modes
- Programmable Automatic Retransmit on Collision
- Programmable Padding and CRC Generation
- Programmable Automatic Rejection of Erroneous Packets
- SPI Interface: Clock Speeds up to 20MHz

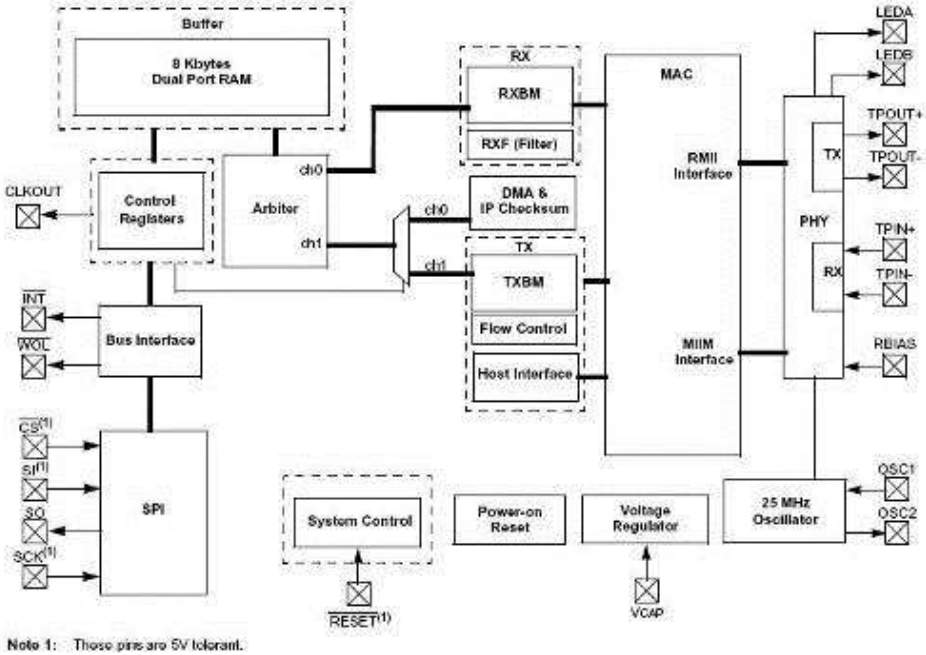

<< BACK

ENC424J600/ENC624J600

Online Datasheet

Features:

- IEEE 802.3™ Compliant Fast Ethernet Controller - Integrated
- MAC and 10/100Base-T PHY - Hardware Security
- Acceleration Engines
- Factory Preprogrammed Unique MAC Address - Supports
- one 10/100Base-T Port with Automatic Polarity Detection and
- Correction
- Supports Auto-Negotiation
- Support for Pause Control Frames, including Automatic
- Transmit and Receive Flow Control
- Supports Half and Full-Duplex Operation
- Programmable Automatic Retransmit on Collision

Available MCU Interfaces:

- 14 Mbit/s SPI interface with enhanced set of opcodes
- 8-bit multiplexed parallel interface

Security Engines:

- High-performance, modular exponentiation engine with up to
- 1024-bit operands
- Supports RSA® and Diffie-Hellman key exchange algorithms
- Fast MD5 hash computations
- Fast SHA-1 hash computations
- **Package**: 44-Pin (TQFP and QFN)

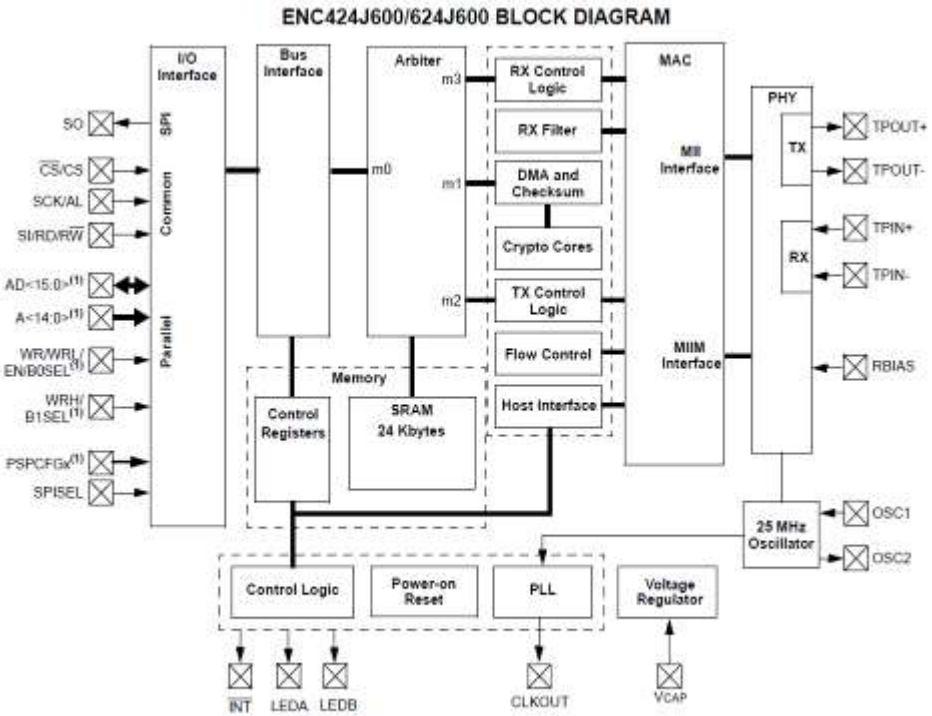

Note 1: A<14:0>, AD15, WRL/B0SEL, WRH/B1SEL and PSPCFG<4:1> are available on 64-pin devices only. PSPCFG0 is available on 44-pin devices only.

<< BACK

LAN8710A/20A

10/100 Ethernet Physical Layer

Online Datasheet

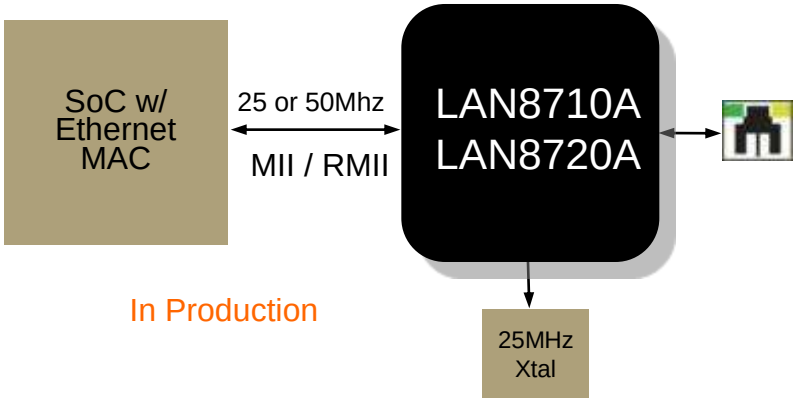

In Production

	Other Solutions	SMSC Solutions
	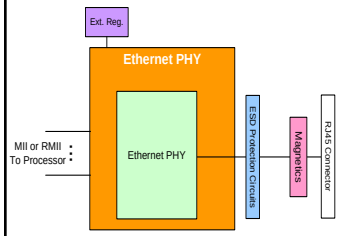	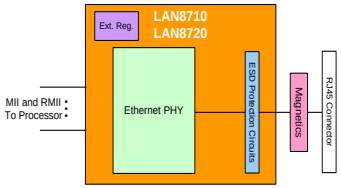
Ethernet PHY	Discrete	Single Solution!
Regulator	Discrete	
ESD protection	External	
Passive	30+	20

Features

- Excellent ESD Protection levels without any external protection devices
  - *Meets / exceeds IEC requirements*
- Integrated DSP with adaptive equalizer
- Integrated 1.2V Linear Regulator
- Incorporates SMSC flexPWR®
  - *Flexible I/O voltage down to 1.8V*
  - *Extremely low energy detect standby mode*
- Uses a low cost 25MHz xtal for RMII
- Lead free ROHS compliant packages:
  - *LAN8710: 32QFN 5x5mm (MII/RMII)*
  - *LAN8720: 24QFN 4x4mm (RMII only)*
- Commercial (0 to +70C) and Industrial (-40 to +85C) temperature supported

LAN8710A/20A Solution Integrates Functions 3-To-1 !!

<< BACK

LAN8740A/1A/2A

Enhanced Ethernet PHY

Online Datasheet

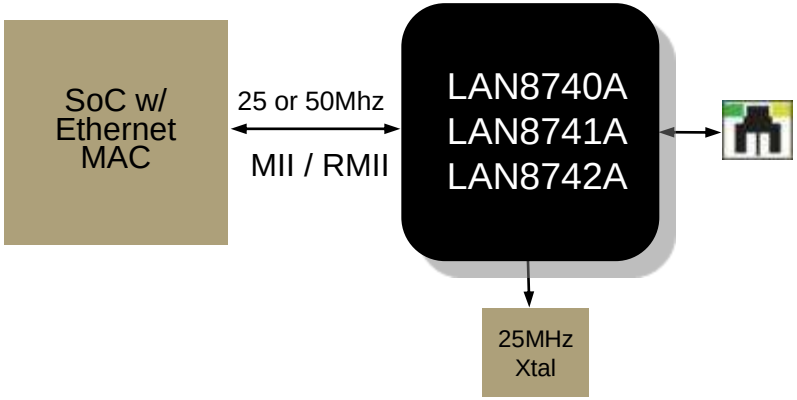

Features

- Energy Efficient Ethernet 802.3az
- Wake On LAN support (WoL)
- Cable Diagnostics
- HP Auto-MDIX
- Compliant with IEEE 802.3/802.3u
- Integrated DSP with adaptive equalizer
- Integrated 1.2V Linear Regulator
- Uses a low cost 25MHz xtal for RMII
- Lead free ROHS compliant packages:
  - LAN8740A/41A: 32QFN (MII/RMII)
  - LAN8742A: 24QFN (RMII only)

Target Applications

- PC Docking
- Port Replicators
- USB to eNet Dongle
- Digital Signage
- Networked Printers
- Netbook/Tablet
- PVR, STB
- Digital TV
- SoC Reference Platforms

Commercial (0 to +70C) and Industrial (-40 to +85C) temperature supported

LAN8740A/41A/42A Pin compatible with LAN8710A/20A!

<< BACK

KSZ8061

10/100BASE-TX PHY

Online Datasheet

- **Quiet-WIRE™ Enhanced EMI performance**
  - Automotive & Industrial
- **EtherGREEN™ PHY technology**
  - 150mW total power consumption
  - IEEE 802.3az Energy Efficient Ethernet (EEE)
  - Ultra-Low Power Standby with signal detect wakeup (<1uA)
- **Deterministic**
  - Fixed latency / Fast link up (<20ms)
- **LinkMD+™ Link Quality Indicator**
- **32-Pin QFN (5mmx 5mm) package**
- **-40 ^{0}C to 105^{0}C ambient**

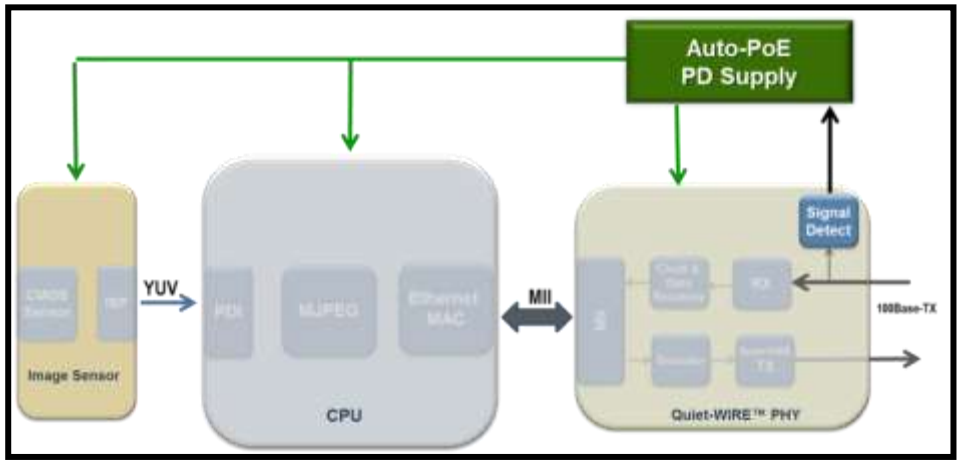

<< BACK

KSZ8081

Single-port 10/100 PHY Transceiver

Online Datasheet

- **Green Fast Ethernet**
  - Low Power (~50% power reduction vs. KSZ8041)
- **Key Features**
  - DSP-based design with Baseline Wander correction
  - MAC Interface: MII / RMII
  - Management: MDC/MDIO, Interrupt output
  - LED outputs
  - LinkMD cable diagnostics
- **Reduced System BOM cost**
  - On-chip line termination
  - Flexible VDDIO: 1.8V, 2.5V, 3.3V
- **I Temp Support**
- **Package**
  - 24-QFN: Smallest 10/100 PHY Package
  - 32-QFN, 48-LQFP

32-pin QFN (5x5 mm)

24-pin QFN (4x4 mm)

<< BACK

KSZ8091

Energy Efficient 10/100 PHY Transceiver

Online Datasheet

- **Pin compatible with KSZ8081**
- **Green Fast Ethernet**
  - Low Power
  - Energy Efficient Ethernet (IEEE 802.3az)
  - Wake on LAN (WoL)
- **Key Features**
  - DSP-based design with Baseline Wander correction
  - MAC Interface: MII / RMII
  - Management: MDC/MDIO, Interrupt output
  - LED outputs
  - LinkMD cable diagnostics
- **Reduced System BOM cost**
  - On-chip line termination
  - Flexible VDDIO: 1.8V, 2.5V, 3.3V
- **I Temp Support**
- **Package**
  - 24-QFN: Smallest 10/100 PHY Package with EEE
  - 32-QFN, 48-LQFP

32-pin QFN (5x5 mm)

24-pin QFN (4x4 mm)

<< BACK

KSZ9031

Low Power Single-port 10/100/1000 PHY

Online Datasheet

- **Green Gigabit Ethernet**
  - Lowest Power GigE PHY
  - Energy Efficient Ethernet (IEEE 802.3az)
  - Wake on LAN (WoL)
- **Flexible I/O Voltages**
  - 1.8V, 2.5V, 3.3V
- **Pin & Package Compatible with KSZ9021**
  - Functional drop in replacement
  - EEE function enabled by firmware
  - WoL function enabled by firmware and strapping option pins (MODE0..3)

KSZ9031RN
(7x7 mm QFN)

KSZ9031GN
(8x8 mm QFN)

Small GigPHY package

<< BACK

LAN92XX 10/100

Online Datasheet

Features:

- Ethernet Controller Family
- High performance 16/32-bit local bus Ethernet controllers
- Support HP Auto MDIX™
- Minimizes dropped packets
  - Internal buffer memory can store over 200 packets
  - Automatic PAUSE and back-pressure flow control
- Reduced host CPU MIPS consumption
- Reduced-power modes
  - Numerous power management modes
  - Wake on LAN
  - Magic packet wakeup
  - Wakeup indicator event signal
  - Link status change
- Flexible address filtering modes
- Full Driver Support for popular OS

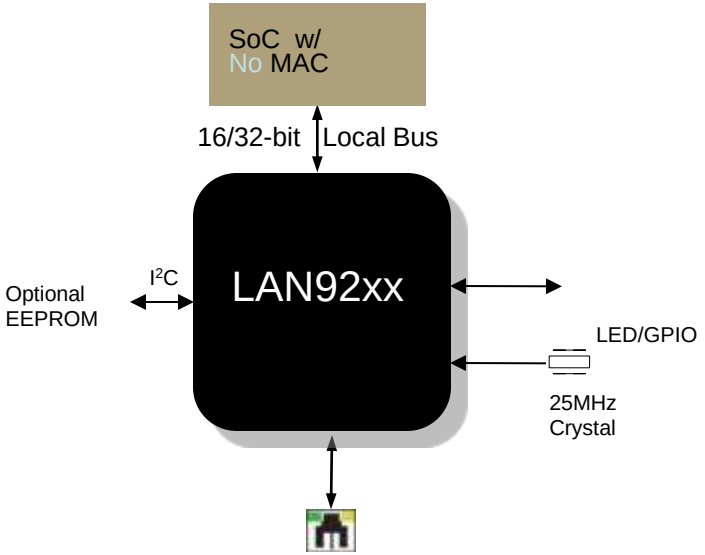

	LAN9221	LAN9220	LAN9217	LAN9218
Bus Interface	16-bit	16-bit	16-bit	32-bit
I/O voltage supported	1.8v to 3.3v	1.8v to 3.3v	3.3v	3.3v
Performance	High	Standard	High	High
External MII			◆	
Mixed Endian	◆	◆		
Industrial Temp available	◆			◆
Checksum Offload Engine	◆	◆		
Package	56 QFN	56 QFN	100 TQFP	**100 TQFP**

<< BACK

LAN9250 10/100

Online Datasheet

Features:

- Industrial Ethernet Controller:
  - 16/32-bit local bus Ethernet controllers
  - IEEE1588v2 Support
- Minimizes dropped packets:
  - Internal buffer memory can store over 200 packets
  - Automatic PAUSE and back pressure flow control
- Reduced host CPU MIPS consumption
- Reduced-power modes:
  - Powermanagement modes including Energy Efficient Ethernet (IEEE802.3az)
  - Wake on LAN
  - Magic packet wakeup
  - Wakeup indicator event signal
  - Link status change
- Flexible address filtering modes
- Full Driver Support for popular OS

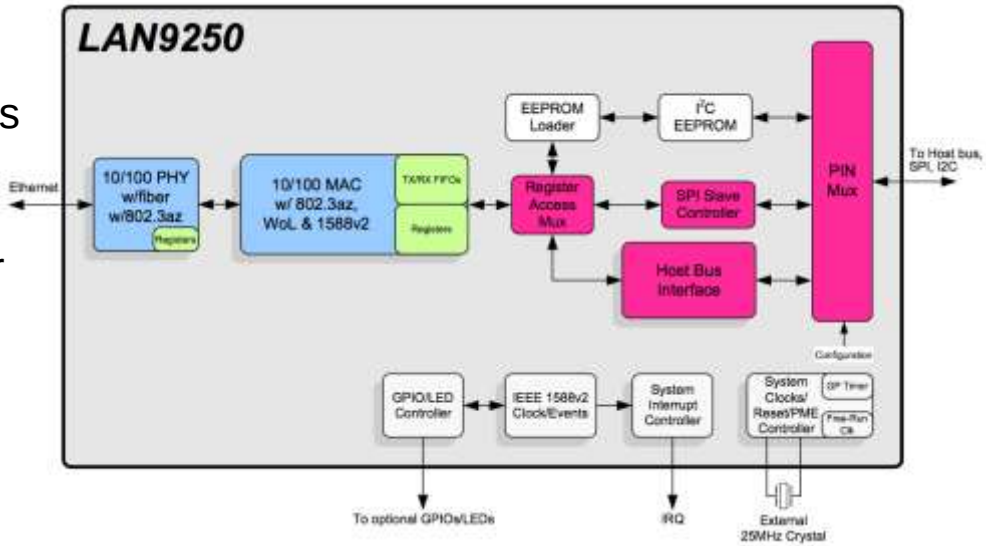

<< BACK

LAN9252

Online Datasheet

Features:

- 2/3-port EtherCAT slave controller
  - 3 Field Bus Memory management Units
  - 4 Sync managers
- Interfaces 8/16/32-bit embedded controllers
  - SPI/SQI PIC32MX
- Dual integrated 10/100 PHY's
  - Auto-MDIX
- Low power mode
- 1.6V to 3.6V variable I/O voltage
- IEEE 802.3u 100Base-FX Fiber Interface
- Cable Diagnostics: Open, Short, Cable length detection
- Integrated 1.2V regulator enables 3.3V supply
- Commercial (0 to +85C), Industrial (-40 to +85C) and Extended temp. (-40 to +105C) supported
- Packaging: 64-pin QFN / TQFP-EP

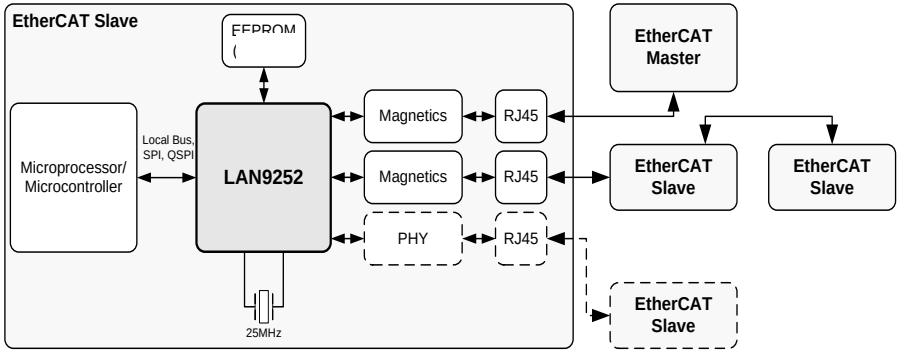

Applications

- Motor Motion Control
- Process / Factory Automation
- Communication Modules
- Interface cards
- Sensors
- Hydraulic & Pneumatic Valve systems
- Robotics

<< BACK

KSZ8851

1-Port 10/100 Controller

Online Datasheet

- **Low Power**
  - <280 mW @ VDD= 3.3 V
  - Advanced power management
  - VDDIO: 1.8/2.5/3.3V options
- **Qualified for wide range of environments**
  - Commercial, Industrial, Extended Temperature (125˚C)
- **Flexible host interfaces**
  - 8/16/32-bit Generic Bus
  - SPI (40 MHz) version
  - 32-pin package for low-end apps.
- **High-Performance**
  - Queue Management Unit achieves >80 Mbps throughput
  - 4 x HD Video Streaming
  - HBM 6KV ESD rating

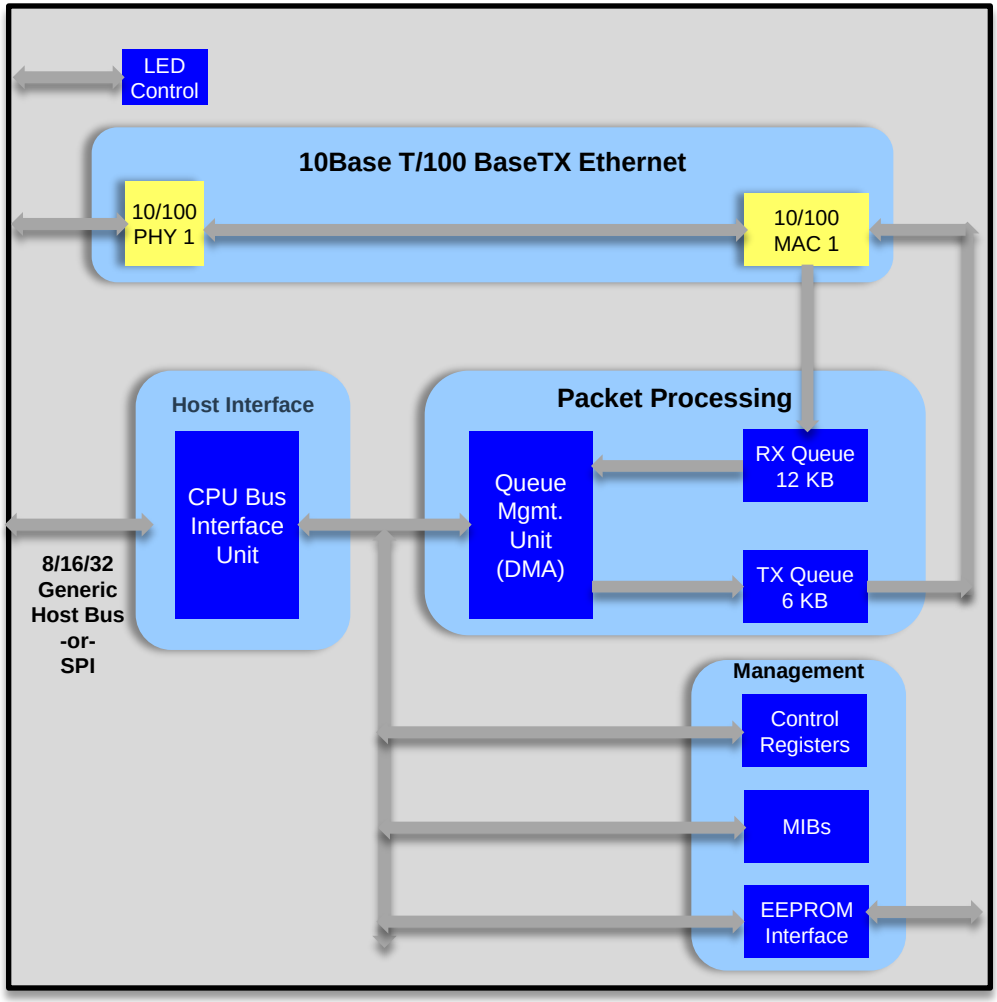

<< BACK

KSZ8863/73

Compact 3-Port 10/100 Switch

Online Datasheet

- **Low power, Highly compact 3-port 10/100 switch**
  - 48-pin LQFP (7 x 7mm)*
  - 64-pin LQFP (10x 10mm)**
  - 3.3 V single supply (< 250 mw)
- **2x Integrated MAC/PHYs**
  - **10/100BASE-TX/FX support**
- **Flexible MAC interfaces**
  - MII/RMII
  - Internal 50 MHz clock eliminates expensive oscillator
- **Distributed Topology support**
  - Bypass mode
  - Source address filtering

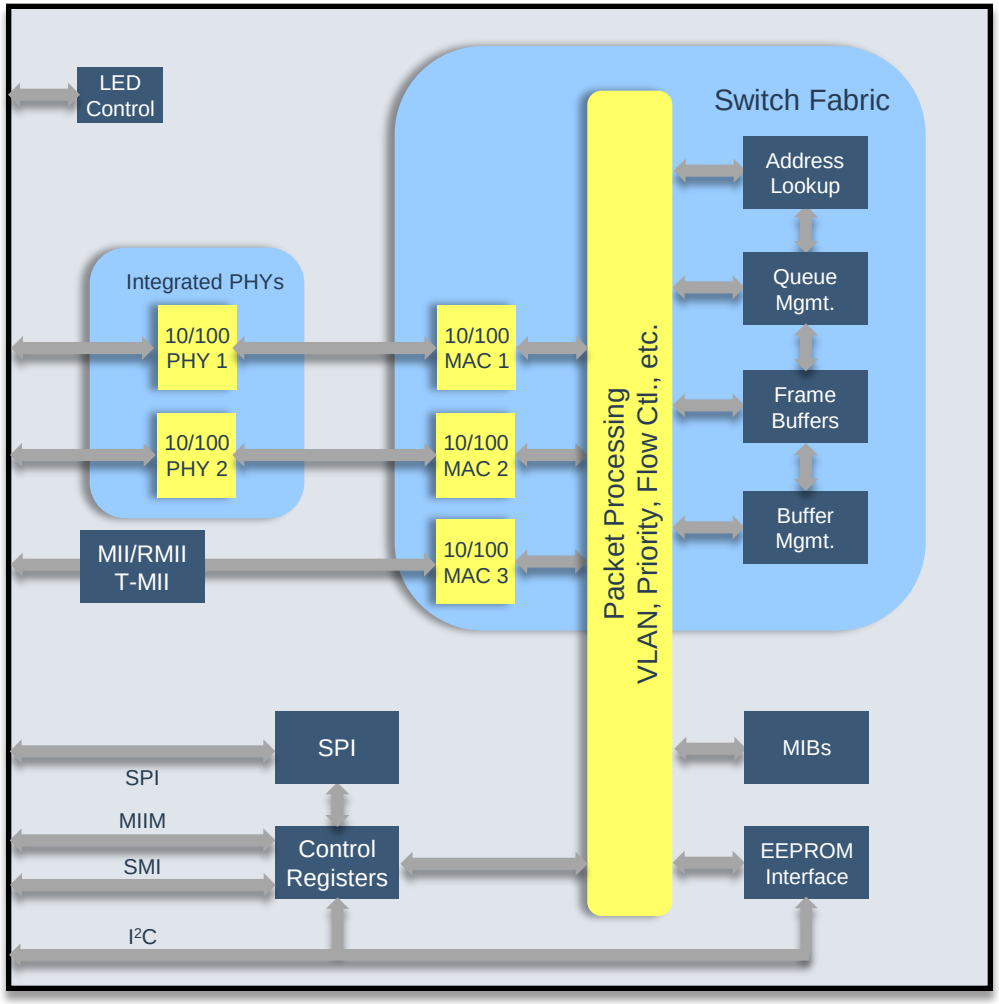

* KSZ8863
**KSZ8873

<< BACK

KSZ8462/3

IEEE 1588 3-port Switch

Online Datasheet

- **802.1AS / IEEE 1588v2**
  - Flexible timing modes
    - MC,SC,TC / E2E, P2P
  - Superior PTP* operations
    - One-step TC h/w corrections
    - Two-step also supported
  - Precision GPIO
  - 802.1AS/PTP software stack
- **Highly integrated**
  - 3-port, 10/100 switch w/ integrated **EEE** PHYs
  - Supports Copper & Fiber PHY ports
  - Ring topology filtering support
  - MII/RMII or 16-bit Host interface
  - <300mW total power consumption
  - 64-pin LQFP (10mm x 10mm)

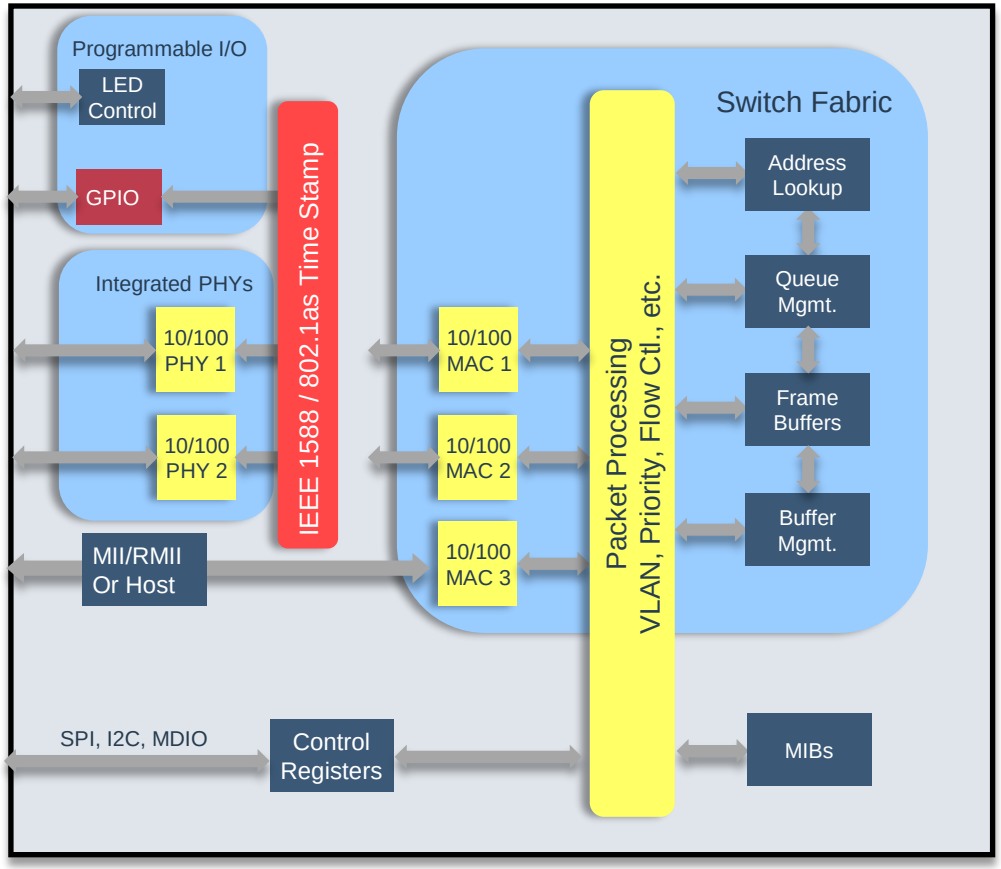

<< BACK

KSZ8864 4-Port

10/100BASE-TX Switch

Online Datasheet

- **Unique 4-Port Switch**
  - 2x copper PHYs (Ports 1&2)
  - 2x MAC interfaces (Ports 3&4)
  - **64-pin QFN package**
- **Cable Diagnostics**
  - LinkMD cable diagnostics
- **Flexible MAC interfaces**
  - MII/RMII selectable by strap pin
  - PHY/MAC modes configurable by register
  - 50MHz input/25MHz input (RMII) configurable by strap pin
- **EtherGREEN™**
  - **<500mW total power consumption**

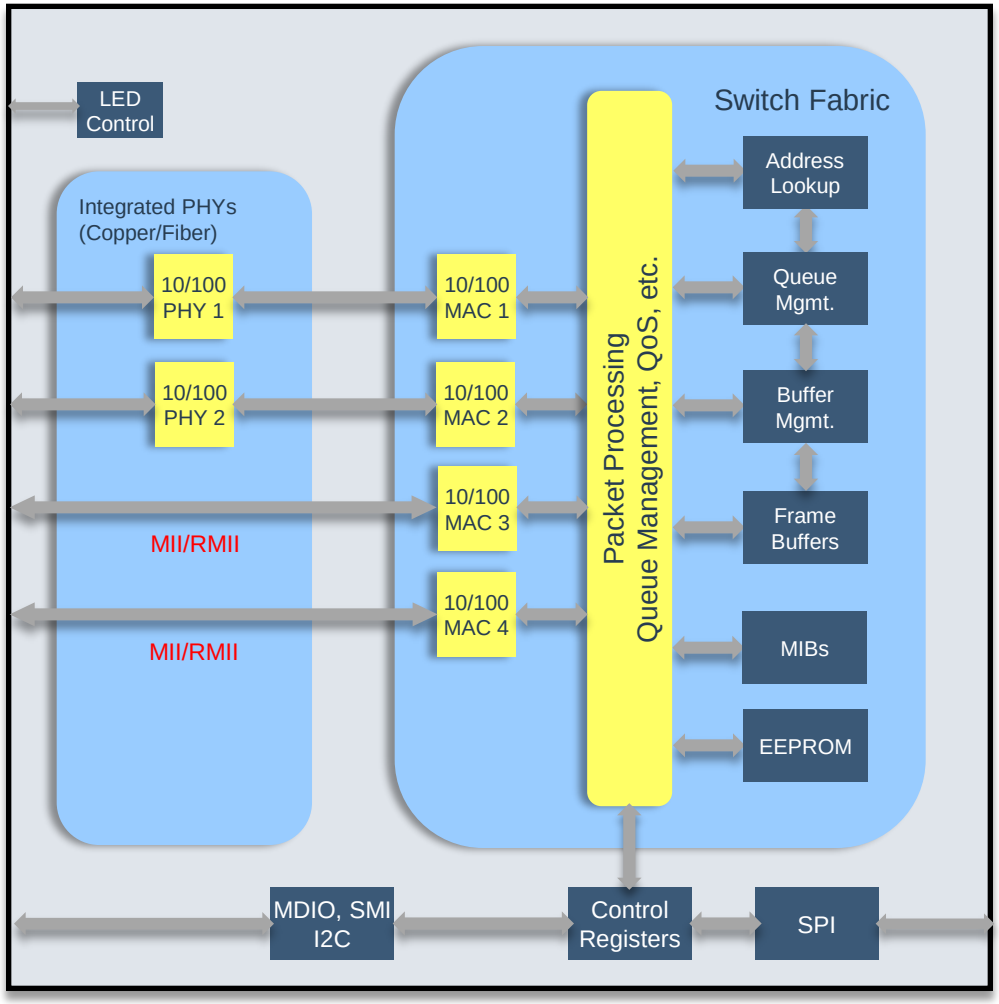

<< BACK

KSZ8895 5-Port

10/100BASE-TX Switch

Online Datasheet

- **Unique 4-Port Switch**
  - 2x copper PHYs (Ports 1&2)
  - 2x MAC interfaces (Ports 3&4)
  - **64-pin QFN package**
- **Cable Diagnostics**
  - LinkMD cable diagnostics
- **Flexible MAC interfaces**
  - MII/RMII selectable by strap pin
  - PHY/MAC modes configurable by register
  - 50MHz input/25MHz input (RMII) configurable by strap pin
- **EtherGREEN™**
  - **<500mW total power consumption**

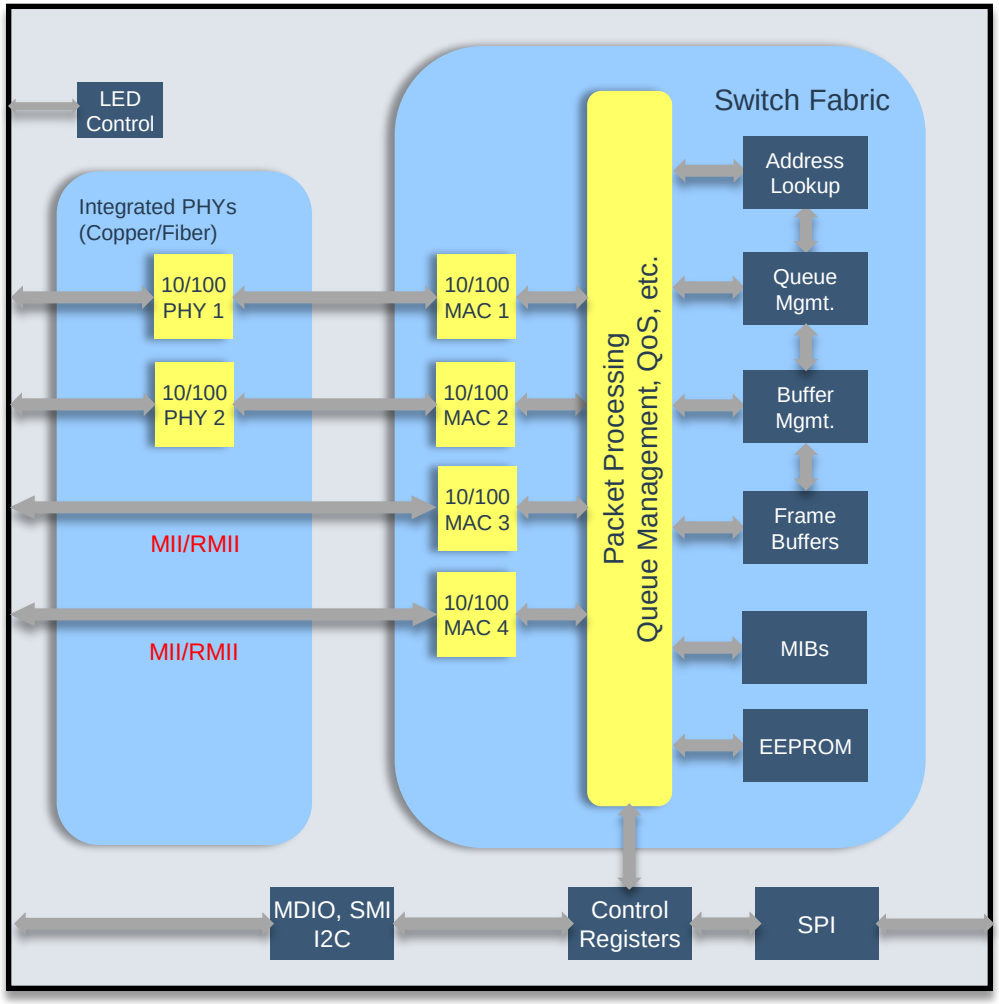

<< BACK

KSZ87xx

5-Port 10/100 Switch w/ Gigabit Uplink

Online Datasheet

- **Green Ethernet Design**
  - 1.8/2.5/3.3V VDDIO
  - < 500mW (typical)
  - Energy Efficient Ethernet (IEEE802.3az)
  - Wake on LAN (WoL)
- **Advanced QoS functions**
  - Bi-directional rate limiting packet/sec
  - 16-entry ACL for packet control
  - QoS with 4 queues priority
- **Small Footprint**
  - 80-LQFP (10x10) for KSZ8795/8775/8765
  - 64-QFN (8x8) for KSZ8794

	PHY	MAC
KSZ8795	4x 10/100 TX	1xGMII/RGMII/MII/RMII
KSZ8775	3x 10/100 TX	1x MII/RMII 1x RGMII/RMII/MII
KSZ8794	3x 10/100 TX	1x RGMII/MII/RMII
KSZ8765	2x 10/100 TX 2x 100 FX	1xGMII/RGMII/MII/RMII

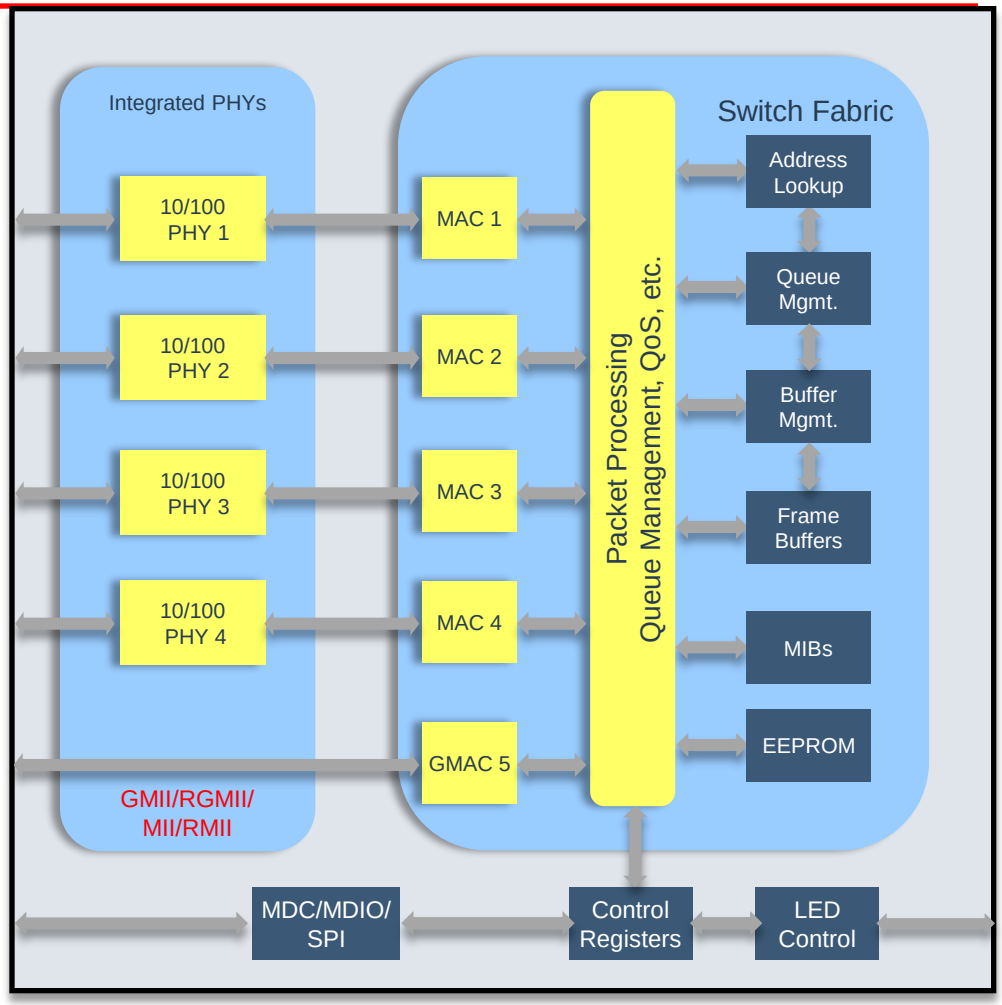

<< BACK

KSZ856x

5/7-Port AVB 10/100 Switch

Online Datasheet

Features:

- EtherGREEN™:
  - Low-power 10/100 PHY design
  - Flexible IO supply (1.8/2.5/3.3V)
  - Advanced Power Management
  - Energy Efficient Ethernet
  - Wake-on-LAN (WoL)
- AVB / Real-Time:
  - Full Ethernet AVB Support
  - Time Aware Scheduler w/ Cut-through
  - EtherSynch™ IEEE1588v2 PTP, Precision GPIO
- Flexible MAC interfaces
  - GMII/MII/RGMII/RMII/SGMII/SerDes
- Package:
  - 128-pin LQFP, 14x14 mm
- I & V Temp Support

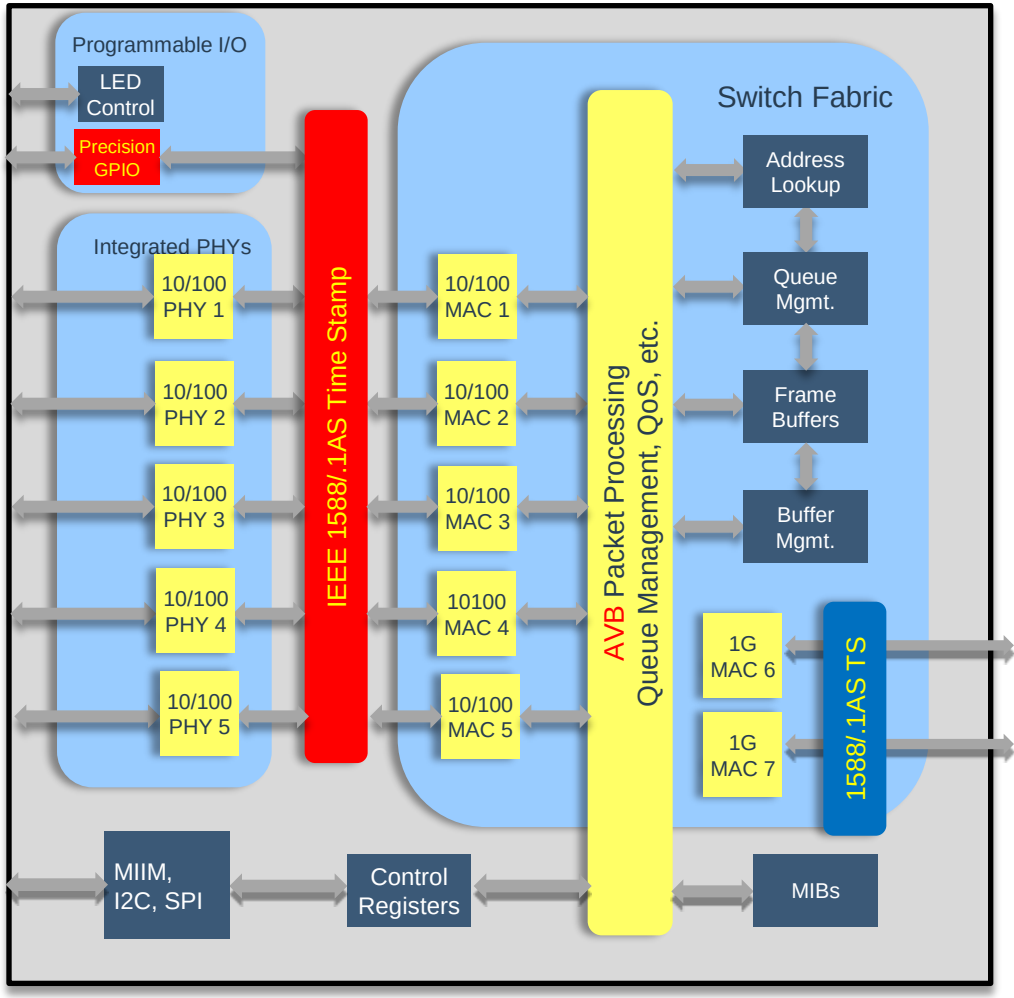

<< BACK

KSZ989x

6/7-Port Gigabit Switch

Online Datasheet

Features:

- EtherGREEN™:
  - Low-power GE PHY design
  - Flexible IO supply (1.8/2.5/3.3V)
  - Advanced Power Management
  - Energy Efficient Ethernet (IEEE802.3az)
  - Wake-on-LAN (WoL)
- Fully Managed Switch:
  - VLAN / Priority based QoS
  - ACL rule-based packet processing
  - IEEE802.1x Authentication
- Flexible MAC interfaces:
  - GMII / MII
  - RGMII / RMII
  - SGMII / SerDes (7-Port only)
- Package:
  - 128-pin LQFP, 14x14 mm
- I Temp Support

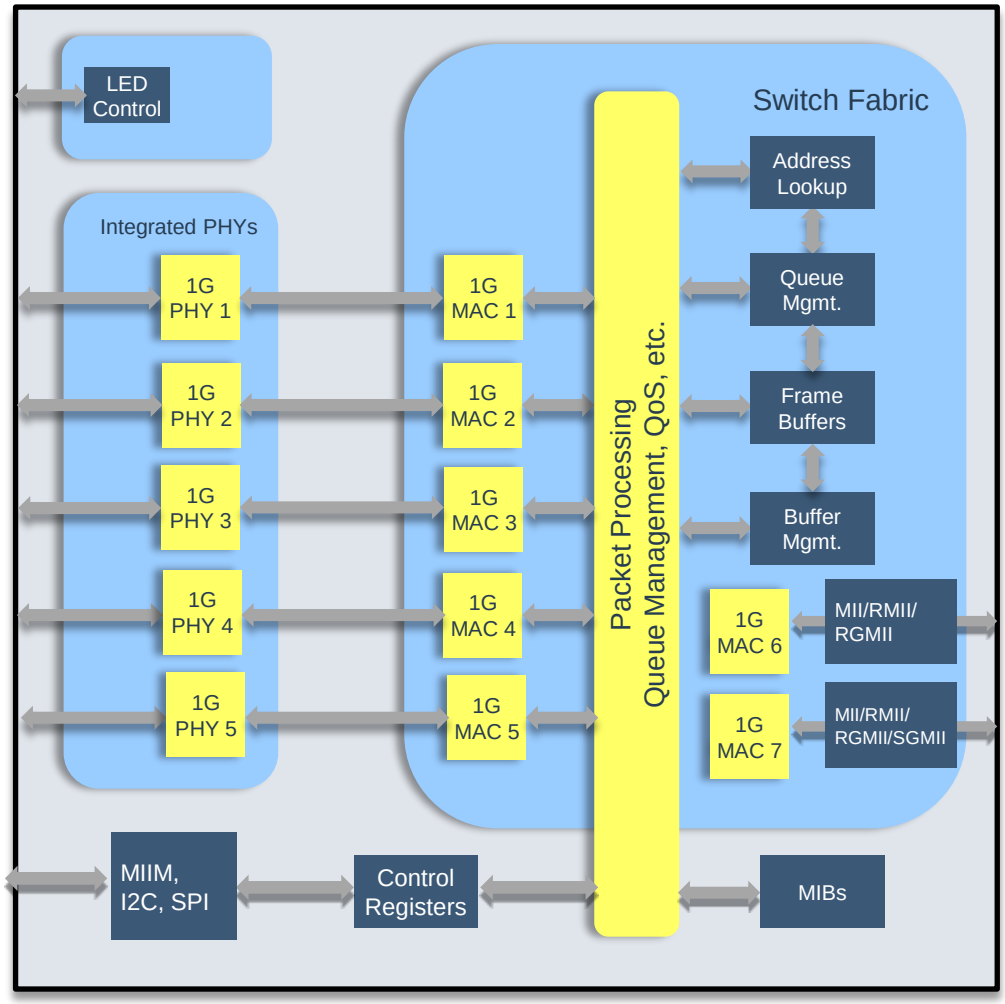

<< BACK

KSZ9567

7-Port AVB Gigabit Switch

Online Datasheet

Features:

- EtherGREEN™:
  - Low-power GE PHY design
  - Flexible IO supply (1.8/2.5/3.3V)
  - Advanced Power Management
  - Energy Efficient Ethernet
  - Wake-on-LAN (WoL)
  - AVB / Real-Time
  - Full Ethernet AVB Support
  - Time Aware Scheduler w/ Cut-through
  - EtherSynch™ IEEE1588v2 PTP, -- Precision GPIO
- Flexible MAC interfaces:
  - GMII/MII/RGMII/RMII/SGMII/SerDes
- Package:
  - 128-pin LQFP, 14x14 mm
- I Temp Support

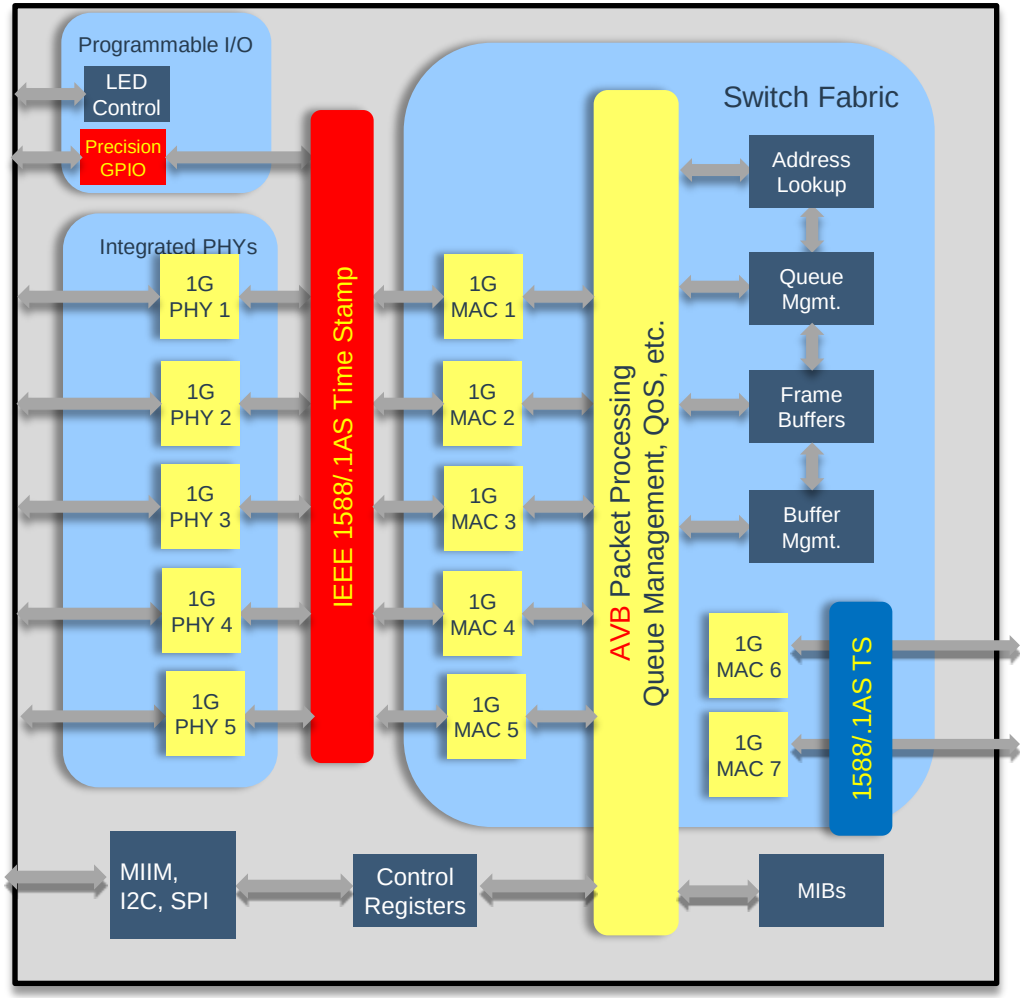

<< BACK

KSZ9477

7-Port Industrial Gigabit Switch

Online Datasheet

Features:

- Pin & Functionally Compatible to –
  - KSZ9567
- Same features as KSZ9567 plus:
  - Network Fault Recovery:
    - Hardware-assisted HSR & DLR
- Flexible MAC interfaces:
  - GMII / RGMII / SGMII / MII / RMII
- 128-Pin LQFP
- I Temp support

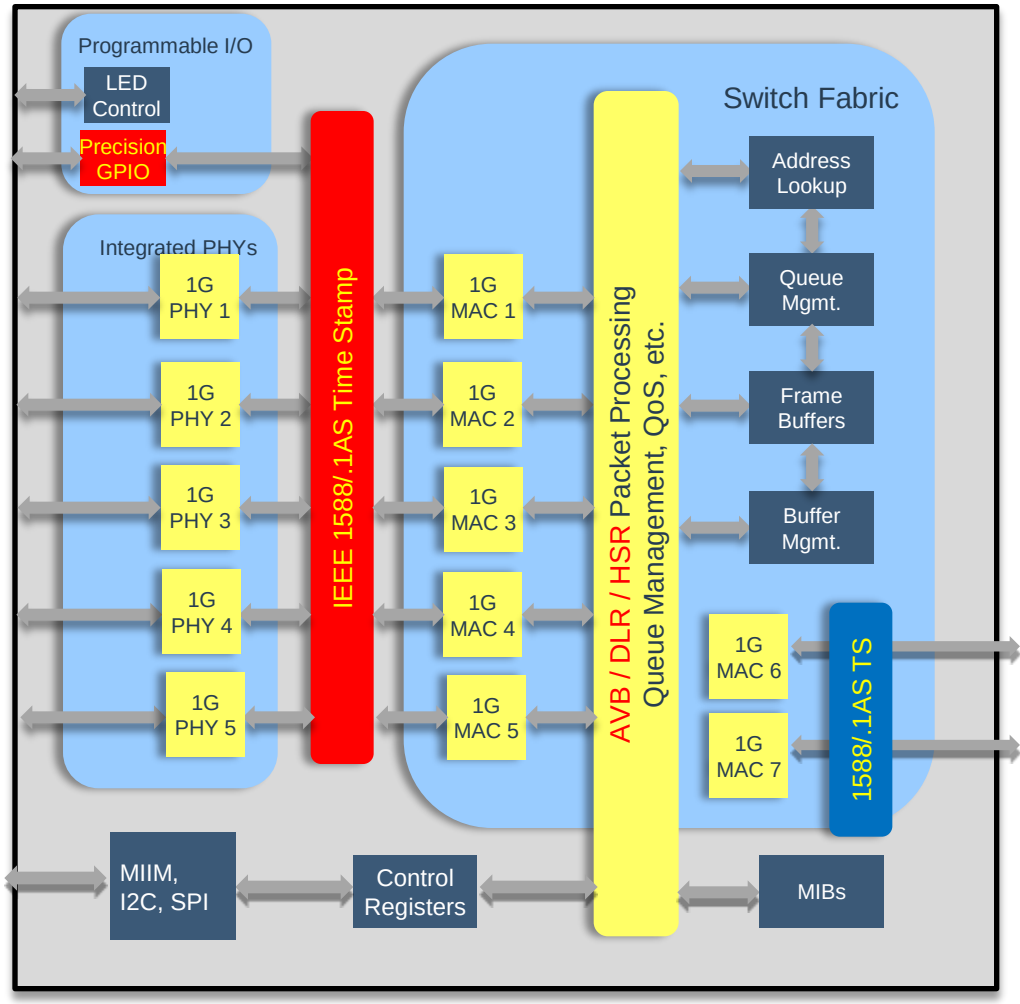

<< BACK

KSZ856x

7-Port 10/100 Switch w/ Gigabit Uplink

Online Datasheet

- **Green Ethernet Design**
  - 1.8/2.5/3.3V VDDIO
  - Energy Efficient Ethernet (IEEE802.3az)
  - Wake on LAN (WoL)
- **Advanced functions**
  - Audio Video Bridging (AVB)
  - IEEE 1588 v2 Precision Time Protocol
  - 802.1X Authentication
  - ACL Filtering
  - Full VLAN and QoS support
  - Flexible management options
    - SPI, I2C, In-Band, MIIM
- **Packaging**
  - 128-Pin TQFP-EP (14mm x 14mm)

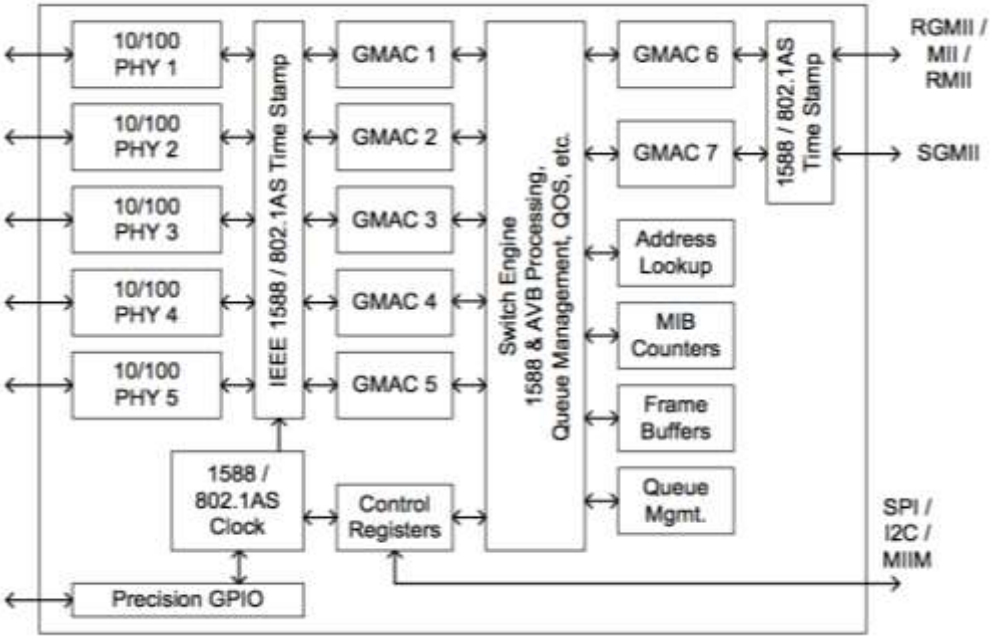

	PHY	MAC
KSZ8563	2 x 10/100 TX	1 x RGMII/MII/RMII
KSZ8565	5 x 10/100 TX	1 x RGMII/MII/RMII
KSZ8567	5 x 10/100 TX	2 x RGMII/RMII/MII

<< BACK

EQCO875SC

Online Datasheet

Features:

- Supports full duplex bi-directional Ethernet speeds up to 100Mbps
- Transmit and receive signal up to 180m (based on application) over 75Ω coax
- Supports auto-mute functionality for lowest application power
- Supports simultaneous power-over-coax (PoC)

Coax Interface	
Connectors	BNC True 75Ω
Cable Impedance	75Ω ± 3Ω
Connector/Coax Return Loss	Return Loss > 25 dB @ 1–200 MHz
Data Throughput	200 Mbps (Simultaneous 100 Mbps in both directions (for all cable lengths)
Aux Interface	
Connector (Head End)	RJ45 (PoE Device Compliant)
Connector (Camera Side)	RJ45 (PoE PSE Compatible)
Cable Type	Category 5 or above, Straight through or cross over (Auto MDI/MDIX)
Rates Supported	100Base-T/10Base-T, full/half duplex. Virtual wire operation with AutoNegotiation to match best capabilities of network equipment at each end
Power Supply Input (Head End Input)	
PoE via RJ45	Fully IEEE 802.3af Power over Ethernet Standard Compliant, nominal 48 V
DC Feed via Aux Power Connector	Min. 12 Vdc, Max. 48 Vdc (inner positive) PoE on RJ45 is disconnected if DC power applied via Aux Power rst Min. 24V recommended if camera is to be powered
Power Supply Output (Camera Side Output)	
PoE via RJ45	PoE Compatible, Vin @ Head End −2V-Coax DC drop (varies with cable type/length)
DC Feed via Coax	Vin @ Head End −2V-Coax DC drop per hop (varies with cable type/length) PoE on RJ45 is disconnected when DC output is used
Environmental	
Operating Temperature	0°C to +50°C
Relative Humidity	Up to 85% non-condensing
Storage Temperature	−20°C to +70°C

<< BACK

EQCO875SC.3-HS

Online Datasheet

Features:

- Supports full duplex bi-directional Ethernet speeds up to 1.25Gbps.
- Transmit and receive signal up to 70m (based on application) over 75Ω coax
- Supports auto-mute functionality for lowest application power
- Supports simultaneous power-over-coax (PoC)

Coax Interface	
Connectors	BNC True 75Ω
Cable Impedance	75Ω ± 3Ω
Connector/Coax Return Loss	Return Loss > 25 dB @ 1–200 MHz
Data Throughput	200 Mbps (Simultaneous 100 Mbps in both directions (for all cable lengths)
Aux Interface	
Connector (Head End)	RJ45 (PoE Device Compliant)
Connector (Camera Side)	RJ45 (PoE PSE Compatible)
Cable Type	Category 5 or above, Straight through or cross over (Auto MDI/MDIX)
Rates Supported	100Base-T/10Base-T, full/half duplex. Virtual wire operation with AutoNegotiation to match best capabilities of network equipment at each end
Power Supply Input (Head End Input)	
PoE via RJ45	Fully IEEE 802.3af Power over Ethernet Standard Compliant, nominal 48 V
DC Feed via Aux Power Connector	Min. 12 Vdc, Max. 48 Vdc (inner positive) PoE on RJ45 is disconnected if DC power applied via Aux Power rst Min. 24V recommended if camera is to be powered
Power Supply Output (Camera Side Output)	
PoE via RJ45	PoE Compatible, Vin @ Head End −2V-Coax DC drop (varies with cable type/length)
DC Feed via Coax	Vin @ Head End −2V-Coax DC drop per hop (varies with cable type/length) PoE on RJ45 is disconnected when DC output is used
Environmental	
Operating Temperature	0°C to +50°C
Relative Humidity	Up to 85% non-condensing
Storage Temperature	−20°C to +70°C

<< BACK

EQCO850SC.3

Online Datasheet

Features:

- Supports full duplex bi-directional Ethernet speeds up to 100Mbps
- Transmit and receive signal up to 80m (based on application) over 50Ω coax
- Supports auto-mute functionality for lowest application power
- Supports simultaneous power-over-coax (PoC)

Coax Interface	
Connectors	BNC True 75Ω
Cable Impedance	50Ω ± 3Ω
Connector/Coax Return Loss	Return Loss > 25 dB @ 1–200 MHz
Data Throughput	200 Mbps (Simultaneous 100 Mbps in both directions (for all cable lengths)
Aux Interface	
Connector (Head End)	RJ45 (PoE Device Compliant)
Connector (Camera Side)	RJ45 (PoE PSE Compatible)
Cable Type	Category 5 or above, Straight through or cross over (Auto MDI/MDIX)
Rates Supported	100Base-T/10Base-T, full/half duplex. Virtual wire operation with AutoNegotiation to match best capabilities of network equipment at each end
Power Supply Input (Head End Input)	
PoE via RJ45	Fully IEEE 802.3af Power over Ethernet Standard Compliant, nominal 48 V
DC Feed via Aux Power Connector	Min. 12 Vdc, Max. 48 Vdc (inner positive) PoE on RJ45 is disconnected if DC power applied via Aux Power rst Min. 24V recommended if camera is to be powered
Power Supply Output (Camera Side Output)	
PoE via RJ45	PoE Compatible, Vin @ Head End −2V-Coax DC drop (varies with cable type/length)
DC Feed via Coax	Vin @ Head End −2V-Coax DC drop per hop (varies with cable type/length) PoE on RJ45 is disconnected when DC output is used
Environmental	
Operating Temperature	0°C to +50°C
Relative Humidity	Up to 85% non-condensing
Storage Temperature	−20°C to +70°C

<< BACK

EQCO850SC.3-HS

Online Datasheet

Features:

- Supports full duplex bi-directional Ethernet speeds up to 1.25Gbps
- Transmit and receive signal up to 40m (based on application) over 50Ω coax
- Supports auto-mute functionality for lowest application power
- Supports simultaneous power-over-coax (PoC)

Coax Interface	
Connectors	BNC True 75Ω
Cable Impedance	50Ω ± 3Ω
Connector/Coax Return Loss	Return Loss > 25 dB @ 1–200 MHz
Data Throughput	200 Mbps (Simultaneous 100 Mbps in both directions (for all cable lengths)
Aux Interface	
Connector (Head End)	RJ45 (PoE Device Compliant)
Connector (Camera Side)	RJ45 (PoE PSE Compatible)
Cable Type	Category 5 or above, Straight through or cross over (Auto MDI/MDIX)
Rates Supported	100Base-T/10Base-T, full/half duplex. Virtual wire operation with AutoNegotiation to match best capabilities of network equipment at each end
Power Supply Input (Head End Input)	
PoE via RJ45	Fully IEEE 802.3af Power over Ethernet Standard Compliant, nominal 48 V
DC Feed via Aux Power Connector	Min. 12 Vdc, Max. 48 Vdc (inner positive) PoE on RJ45 is disconnected if DC power applied via Aux Power rst Min. 24V recommended if camera is to be powered
Power Supply Output (Camera Side Output)	
PoE via RJ45	PoE Compatible, Vin @ Head End −2V-Coax DC drop (varies with cable type/length)
DC Feed via Coax	Vin @ Head End −2V-Coax DC drop per hop (varies with cable type/length) PoE on RJ45 is disconnected when DC output is used
Environmental	
Operating Temperature	0°C to +50°C
Relative Humidity	Up to 85% non-condensing
Storage Temperature	−20°C to +70°C

<< BACK

LAN9303 Enhanced

10/100 3 Port Switch

Online Datasheet

Features:

- High-performance, full-featured 3 port switch
  - IEEE 802.1Q VLAN support
- IGMP snooping for multicast packet filtering
- Up to 200Mbps network speed via Turbo MII interface
- Optional EEPROM or external CPU serial management support via I2C interface
- Unique virtual PHY feature simplifies software development by mimicking multiple switch ports as a single-port PHY
- Integrated reg enables single 3.3V supply
- +/- 8kV/15kV per port ESD protection
- Lead free ROHS compliant packages
  - LAN9303: 56-pin QFN 8x8mm
  - LAN9303M: 72-pin QFN 10x10mm
- Commercial (0 to +70C) and Industrial (-40 to +85C) temperature supported

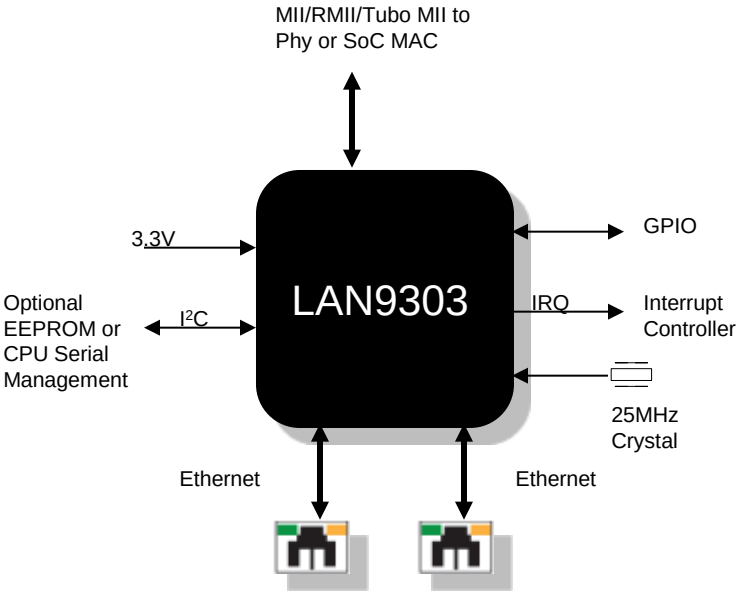

<< BACK

LAN9353/54/55

Online Datasheet

Features:

- Enhanced 2/3 Port Switches
- IEEE 1588-2008 Compliant
  - Supports UDP/IPv4/IPv6 and layer 2
  - Transparent and Boundary clocks,
  - Smaller packet size & Increased update rate
- IEEE 802.3u 100Base-FX Fiber Interface
- IEEE 802.3az Energy Efficient Ethernet
- WoL for additional system power savings
- Cable Diagnostics: detection of Open, Short and Cable length
- Optional EEPROM or external SoC serial management support via I2C interface
- Virtual PHY support to simplify s/w development
- Integrated reg enables single 3.3V supply
- Packaging:
  - LAN9353M/2xRMII: 64-pin QFN/ 64 pin QFP-EP
  - LAN9354 RMII: 56-pin QFN
  - LAN9355/2xMII: 88-pin QFN/ 80-pin QFP-EP

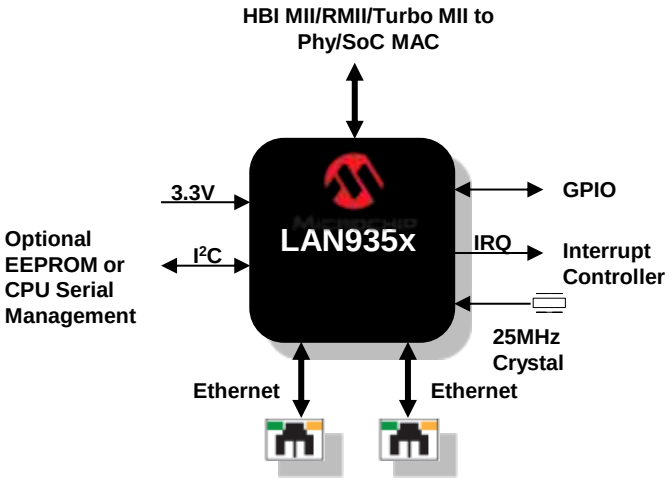

Applications

- Industrial PC
- VoIP gateway
- SOHO/SMB router
- Telecom
- Financial Transactions
- Industrial Networks
- Power Grid/Meter
- Security / Surveillance
- Transportation
- Mill/Aero

<< BACK

LAN9730

HSIC to 10/100 Ethernet

Online Datasheet

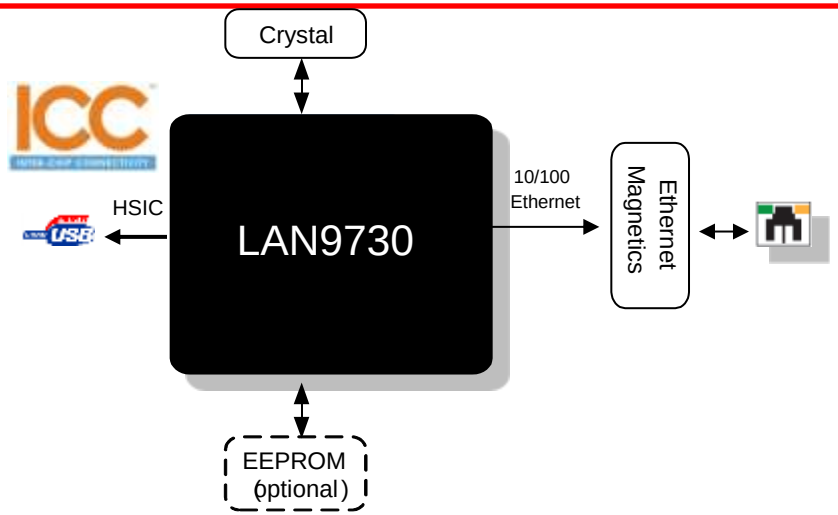

Features

- Software compatibility - Transparent to USB software stack and device drivers
- Fully supports IEEE 802.3/802.3u standards
- Power savings - Eliminate two USB PHY's in on-board USB chip-to-chip connection
  - 2-pin interface: Clock, Data
- Implements WoL support for reduced system power consumption
- Supports EEPROM-less operation for reduced BOM costs
- UniClock Technology requires single 25 MHz crystal for USB & Ethernet
- Lead free ROHS compliant packages

  LAN9730: 56-pin QFN 8x8mm

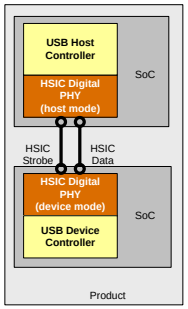

Target Applications

- IP TV Players
- Set Top Box
- Digital TV
- Docking (wireless)
- Digital Signage
- Netbook/Tablet
- SoC Reference Platforms
- TI OMAP5, Nvidia Tegra, Marvell

What is HSIC - USB chip-to-chip interconnect. HSIC removes the analog transceivers found in normal USB. HSIC is meant to be a point to point connection between a host and device on the same PCB.

Commercial (0 to +70C) and Industrial (-40 to +85C) temperature supported

<< BACK

LAN7800/01/50

USB3.1 Gen1/USB2.0/HSIC to 10/100 Ethernet

Online Datasheet

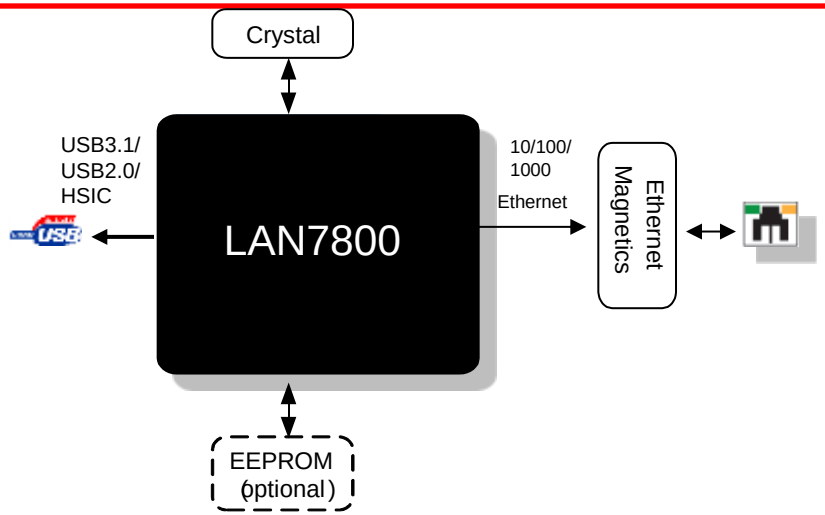

Target Applications

- PC Docking
- Port Replicators
- USB to eNet Dongle
- Digital Signage
- Networked Printers
- Netbook/Tablet
- PVR, STB
- Digital TV
- SoC Reference Platforms

Features

- Three product SKUs
  - LAN7800 – USB3.1 Gen1 to GigE
  - LAN7801 – USB3.1 Gen1 to RGMII (use with external PHY)
  - LAN7850 – HSIC to GigE
- Software compatibility - Transparent to USB software stack and device drivers
- Fully supports IEEE 802.3/802.3u standards
- Implements NetDetach™ and WoL support for reduced system power consumption
- Supports EEPROM-less operation for reduced BOM costs
- UniClock Technology requires single 25 MHz crystal for USB & Ethernet
- Temperature range: Commercial (0 to +70C) and Industrial (-40 to +85C)

What is HSIC - USB chip-to-chip interconnect. HSIC removes the analog transceivers found in normal USB. HSIC is meant to be a point to point connection between a host and device on the same PCB.

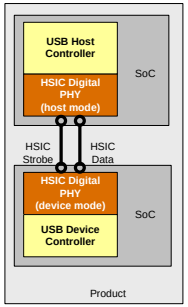

<< BACK

LAN7500 USB to

Gigabit Ethernet

Online Datasheet

Features:

- Fully supports IEEE 802.3/802.3u/802.3ab standards
- Implements NetDetach™ for reduced system power consumption
- Excellent ESD Protection levels without any external protection device
  - ±8kV / ±15kV for contact/air discharge mode per IEC61000-4-2
- Supports EEPROM-less operation for reduced BOM costs
- UniClock Technology requires single 25 MHz crystal for both USB and Ethernet
- Package:
- 56-pin QFN 8x8mm
- Commercial (0 to +70C) and Industrial (-40 to +85C) temperature supported

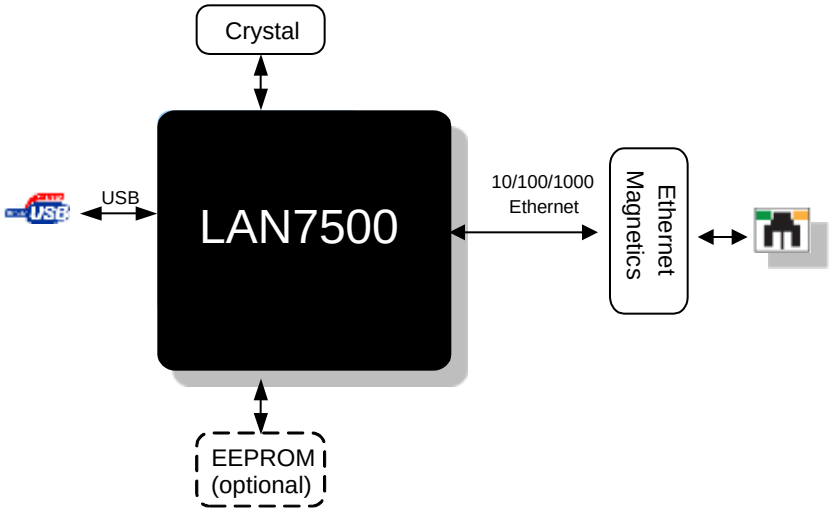

Target Applications

- PC Docking
- Port Replicators
- USB to eNet Dongle
- Digital Signage
- Networked Printers
- Netbook/Tablet
- PVR, STB
- Digital TV
- SoC Reference Platforms

<< BACK

LAN951X USB 2.0 Hub

10/100 Ethernet Combo

Online Datasheet

Features:

- USB to Ethernet controller with USB2.0 hub integrated
  - 1st in the industry !
  - 2, 3 or 4 additional USB downstream ports and 10/100 Ethernet
    - LAN9512 → 2 downstream ports
    - LAN9513 → 3 downstream ports
    - LAN9514 → 4 downstream ports
- Unique BOM cost saving features
  - Only a single 25MHz crystal needed for both USB and Ethernet
  - Built in 8kv/15kv contact/air discharge ESD protection
  - 24MHz clock out provided to connect additional SMSC USB hub if needed
- Extensive power management features
  - WOL, Magic Packet, GPIO assertion, Link Status Change
- Package: 64QFN 9x9mm Package

Integrated 3 Port USB Hub

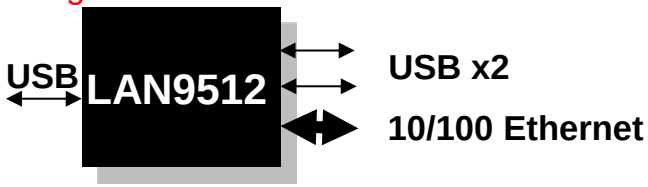

Integrated 4 Port USB Hub

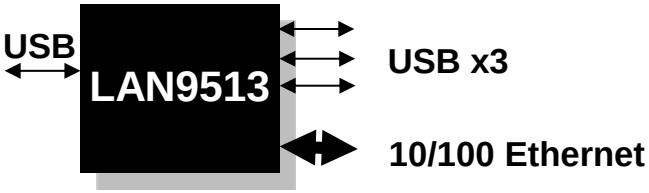

Integrated 5 Port USB Hub

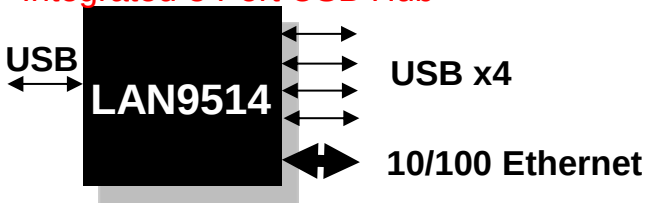

Target Applications

- PC Docking
- Port Replicators
- USB to eNet Dongle
- Digital Signage
- Networked Printers
- Netbook/Tablet
- PVR, STB
- Digital TV
- SoC Reference Platforms

<< BACK

ARCnet Controllers COM20019i/20i/22i

Online Datasheet

Features:

- ANSI Standard 878.1
- ***Deterministic*** protocol based on Token Passing.
  - Perfect for Automation and Process applications
- 3.3v Power Supply
- Low software overhead
- Simple address & data interface
  - Compatible with any SoC
  - 8/16 bit bus
- COM20019 312Kbps data rate
- COM20020 5Mbps data rate
- COM20022 10Mbps data rate
- Devices come in either 28PLCC or 48TQFP
  - COM20022 48TQFP only
- Commercial (0 to +70C) and Industrial (-40 to +85C) temperature supported

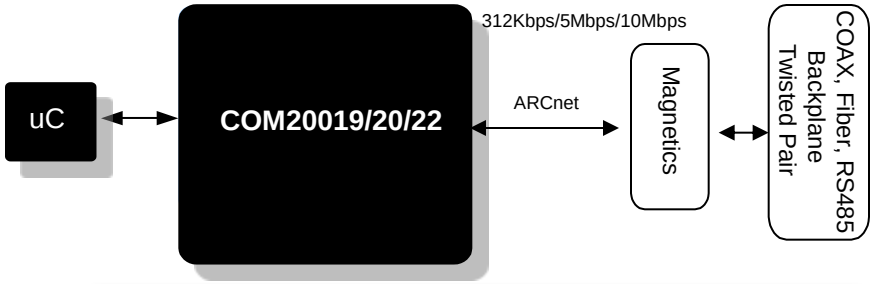

Additional information available at the ARCnet Trade Association WEB site www.arcnet.com

Target Applications

- Transportation
- Gaming
- Photo Development Equipment
- Medical Equipment
- Process Equipment
- Building Automation
- ATM's
- Robotics
- Power generation

<< BACK

LANCheck
Design Review Service

LANCheck Online Review is a personalized, value-added service available at no charge to customers who have selected our Ethernet offerings for their application design-in. LANCheck will support your design process by providing guidance through the complete design cycle – from initial schematic design to PCB design.

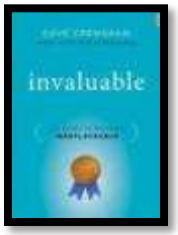

Benefits:

- Accelerated design cycle, reduced design risk & improves time-to-market
- Savings in PCB costs by reducing spins
- Address EMI and ESD compliance requirements early on in the design cycle
- “Heads-up” provided in the LANCheck feedback on subtle specifications for companion parts (magnetics, crystals, oscillators)
- On-line documentation allows the customer to “help themselves” and eliminates any back-and-forth between the factory, saving time

<< BACK

MCP2030

Online Datasheet

Features:

- Three input pins for analog input signals
- High input detection sensitivity: 3mV$_{P-P}$ (typ.)
- High modulation depth sensitivity (as low as 8%)
- Three output selections:
  Demodulated data, Carrier clock, RSSI
- Input carrier frequency: 125kHz (typ.)
- Input data rate: 10 kbps, maximum
- 8 internal Configuration registers
- Bidirectional transponder communication (LF talk back)
- Programmable antenna tuning capacitance (up to 63pF, 1pF/step)
- Programmable output enable filter
- Low standby current: 4µA (typ.) with 3 channels enabled
- Low operating current:
  13µA (typ.) with 3 channels enabled
- Serial Peripheral Interface (SPI™) with external devices
- Supports Battery Back-Up mode and battery-less operation with external circuits
- Industrial Temperature Range:
  -40°C to +85°C (industrial)

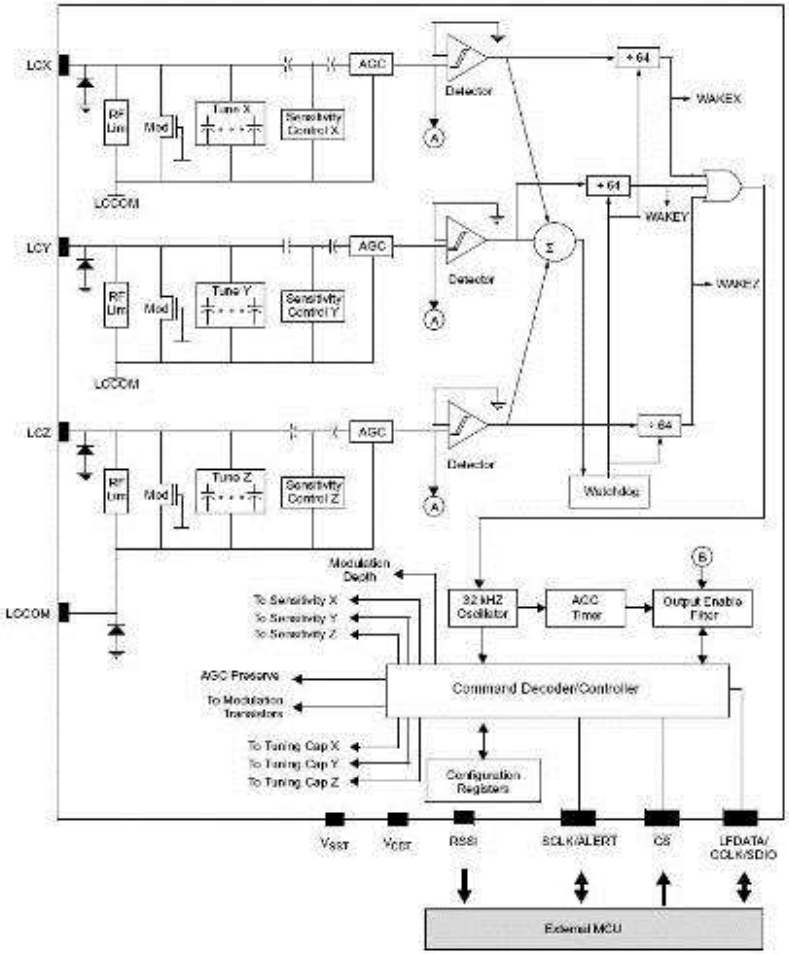

<< BACK

MCP2035

Online Datasheet

Features:

- Single Analog Input Pin for Signal Detection
- High Input Detection Sensitivity (3 mVPP, typical)
- High Modulation Depth Sensitivity (as low as 8%)
- Three Output Type Selections:
  - Demodulated Data
  - Carrier Clock
  - Received Signal Strength Indicator (RSSI)
- Input Carrier Frequency: 125 kHz, typical
- Input Data Rate: 10 Kbps, maximum
- 8 Internal Configuration Registers
- Bidirectional Transponder Communication via the same input pin (LF talk-back)
- Programmable Antenna Tuning Capacitance (up to 63 pF, 1 pF/step)
- Programmable Output Enable Filter
- Low Standby Current: 2 µA, typical
- Low Operating Current: 10 µA, typical
- Serial Peripheral Interface (SPI) with external devices
- Industrial Temperature Range: -40°C to +85°C
- 14-lead TSSOP

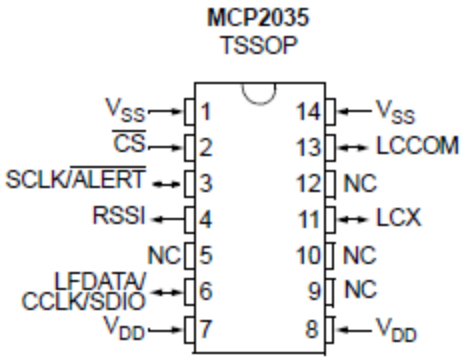

<< BACK

ATA5831/32/33

RF Transceiver

Online Datasheet

Features:

- AVR® microcontroller core
- ATA5831: 20Kbyte user flash
- ATA5832: 20Kbyte user ROM
- ATA5833: No user memory
- Supported frequency ranges
  - Low-band 310…318 MHz, 418…477 MHz
  - High-band 836…956 MHz
  - 315.00/433.92/868.30/915.00 MHz with one 24.305 MHz crystal
- Low current consumption
- Typical OFF Mode current of 5nA
- Programmable output power –12dBm to +14.5dBm
- Supply voltage ranges 1.9V to 3.6V and 2.4v to 5.5v
- Temperature range –40°C to +105°C
- ESD protection at all pins (±4kV HBM, ±200V MM, ±750V FCDM)
- Small 5x5mm QFN32 package

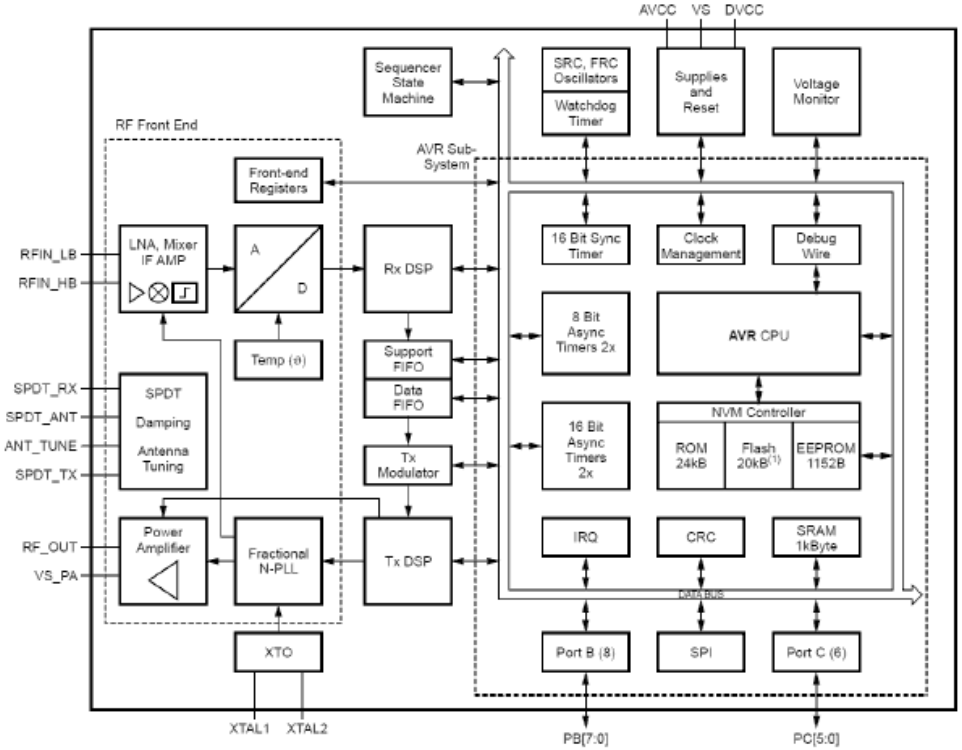

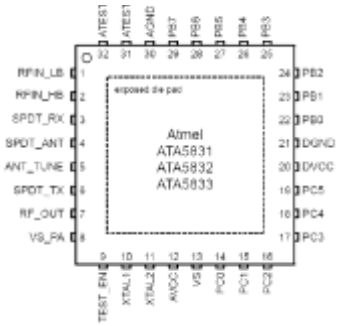

<< BACK

ATA5781/82/83

RF Receiver

Online Datasheet

Features RF Receiver:

- AVR® microcontroller core
- ATA5782: 20Kbyte of user flash
- ATA5783: 20Kbyte of user ROM
- ATA5781: No user memory
- Supported frequency ranges
  - Low-band 310…318 MHz, 418…477 MHz
  - High-band 836…956 MHz
  - 315.00/433.92/868.30/915.00 MHz with one 24.305 MHz crystal
- Low current consumption
- Typical OFF Mode current of 5nA
- Blocking (BWIF = 165kHz) 64dBc at frequency offset = 1MHz and 48dBc at 225kHz
- Supply voltage ranges 1.9V to 3.6V and 2.4V to 5.5V
- Temperature range –40°C to +105°C
- ESD protection at all pins (±4kV HBM, ±200V MM, ±750V FCDM)
- Small 5x5mm QFN32 package

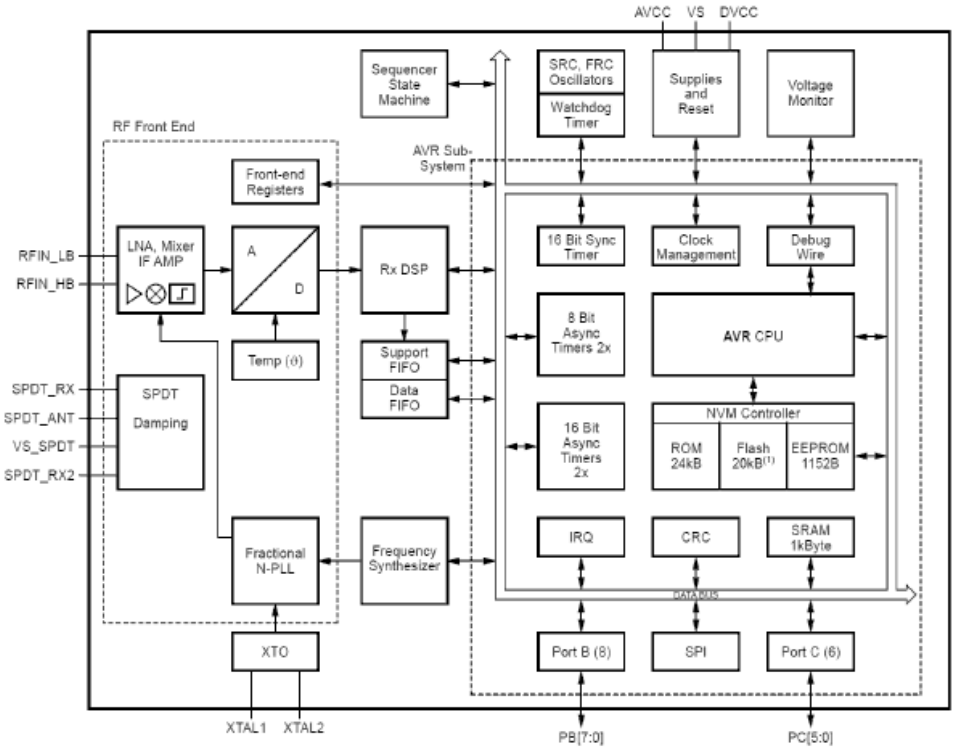

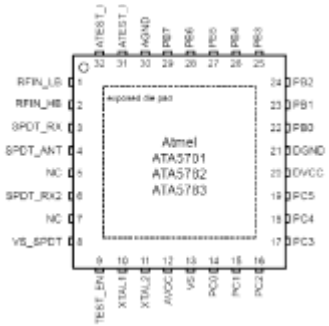

<< BACK

T5750C
RF Transmitter

Online Datasheet

Features:

- Transmitting frequency range is 868 MHz to 928 MHz
- Integrated PLL loop filter
- ESD protection also at ANT1/ANT2 (3kV HBM/150V MM; except pin 2: 3kV HBM/100V MM)
- High output power with low supply current
- Modulation scheme ASK/FSK
- FSK modulation is achieved by connecting an additional capacitor between the XTAL load capacitor and the open drain output of the modulating microcontroller
- Easy to design-in due to excellent isolation of the PLL from the PA and Power supply
- Single Li-cell for power supply
- Supply voltage 2.0V to 4.0V in the temperature range of –40°C to +85°C/+125°C
- Package TSSOP8L
- Single-ended antenna output with high efficient power amplifier
- CLK output for clocking the microcontroller
- One-chip solution with minimum external circuitry

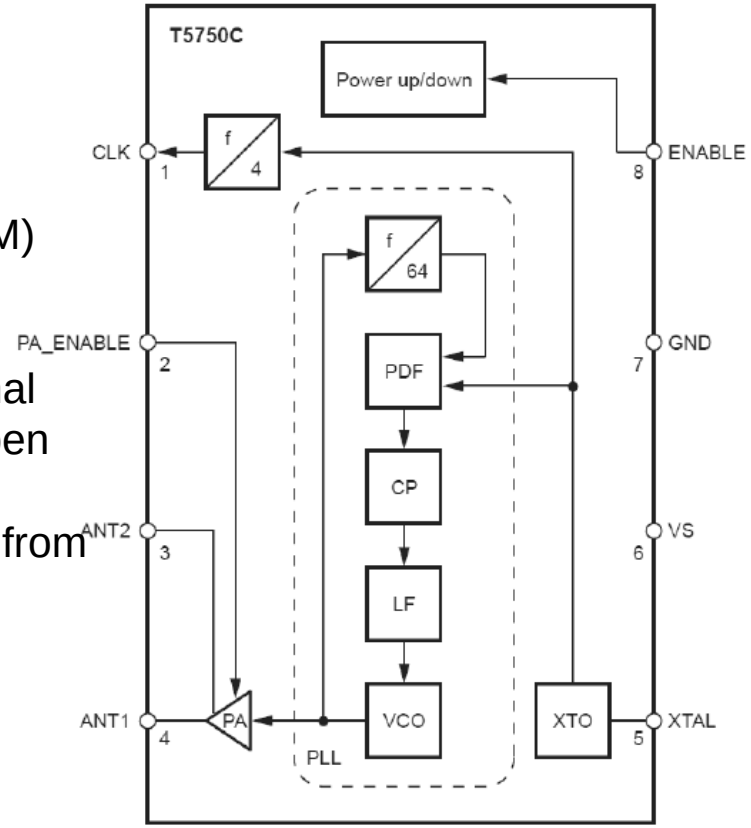

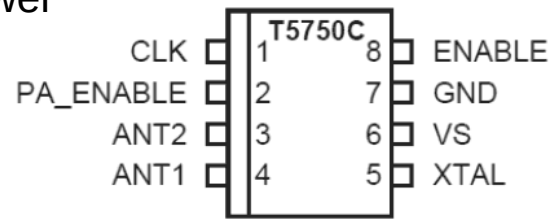

<< BACK

T5753C
RF Transmitter

Online Datasheet

Features RF:

- Transmitting frequency range is 310MHz to 350MHz
- Integrated PLL loop filter
- ESD protection also at ANT1/ANT2 (3kV HBM/150V MM; except pin 2: 3kV HBM/100V MM)
- High output power with low supply current
- Modulation scheme ASK/FSK
- FSK modulation is achieved by connecting an additional capacitor between the XTAL load capacitor and the open drain output of the modulating microcontroller
- Easy to design-in due to excellent isolation of the PLL from the PA and Power supply
- Single Li-cell for power supply
- Supply voltage 2.0V to 4.0V in the temperature range of –40°C to +85°C/+125°C
- Package TSSOP8L
- Single-ended antenna output with high efficient power amplifier
- CLK output for clocking the microcontroller
- One-chip solution with minimum external circuitry

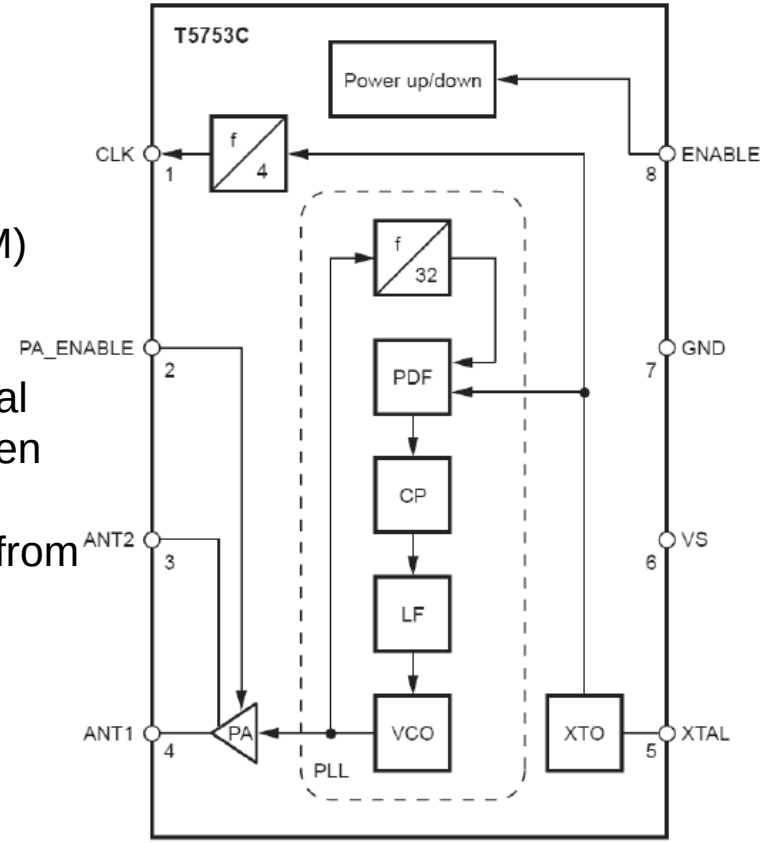

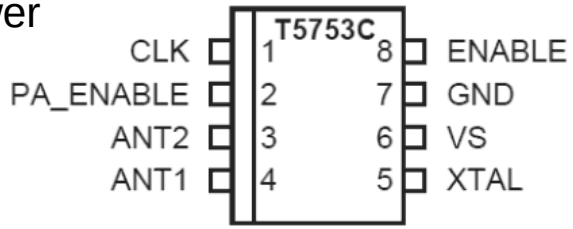

<< BACK

T5754C
RF Transmitter

Online Datasheet

Features:

- Transmitting frequency range is 429MHz to 439MHz
- Integrated PLL loop filter
- ESD protection also at ANT1/ANT2 (3kV HBM/150V MM; except pin 2: 3kV HBM/100V MM
- High output power with low supply current
- Modulation scheme ASK/FSK
- FSK modulation is achieved by connecting an additiona capacitor between the XTAL load capacitor and the ope drain output of the modulating microcontroller
- Easy to design-in due to excellent isolation of the PLL f the PA and Power supply
- Single Li-cell for power supply
- Supply voltage 2.0V to 4.0V in the temperature range of –40°C to +85°C/+125°C
- Package TSSOP8L
- Single-ended antenna output with high efficient power amplifier
- CLK output for clocking the microcontroller
- One-chip solution with minimum external circuitry

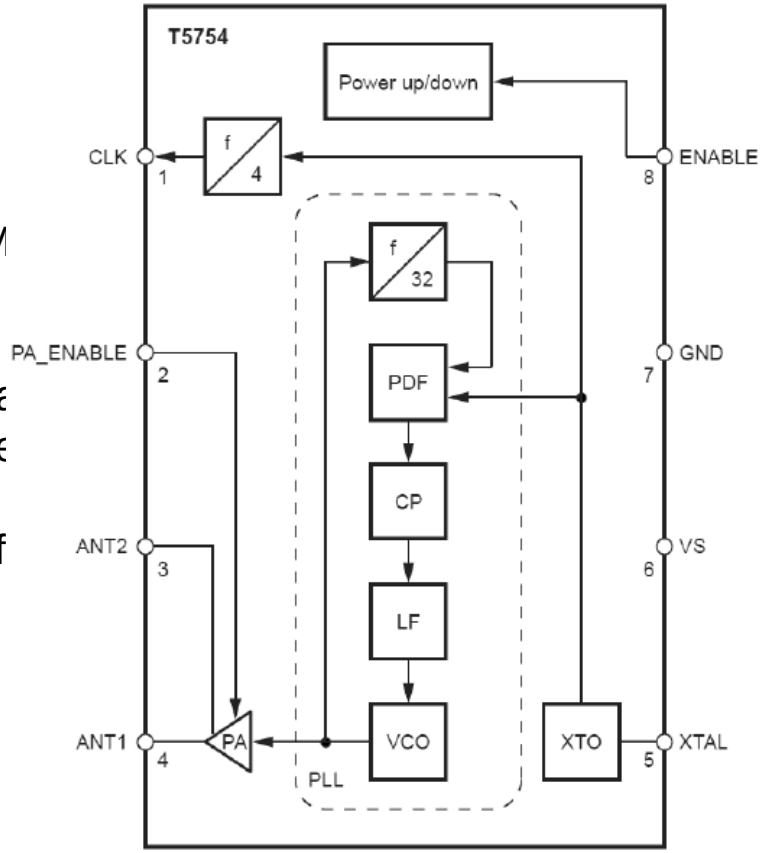

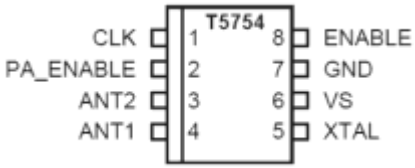

<< BACK

ATA5291

LF Transmitter

Online Datasheet

Features:

- 4 integrated LF drivers, programmable peak current up to $1A_p$, adjustable in 20 steps
  - Support of $2A_p$ per Antenna
- Integrated mux (4 int., 4 ext.) with the ability to drive any 2 coils simultaneously
- Independent, integrated LF Transceiver for immobilizer; stand-alone or shared
- Digital filter with excellent noise suppression for remote antenna system
- Operating supply: 7-16.5V
- Jump Start: 7V-28V; Immo down to 5V
- Integrated Boost Converter control
- Programmable carriers (sinus/square/ custom) for best EMC
- Autonomous polling mode
- Fast 2Mbit/s SPI interface
- Temperature Range: -40C to 125C
- Full diagnostic coverage for all channels Short to GND, VCC, other Coils, Open detection
- Package QFN48 (7x7)

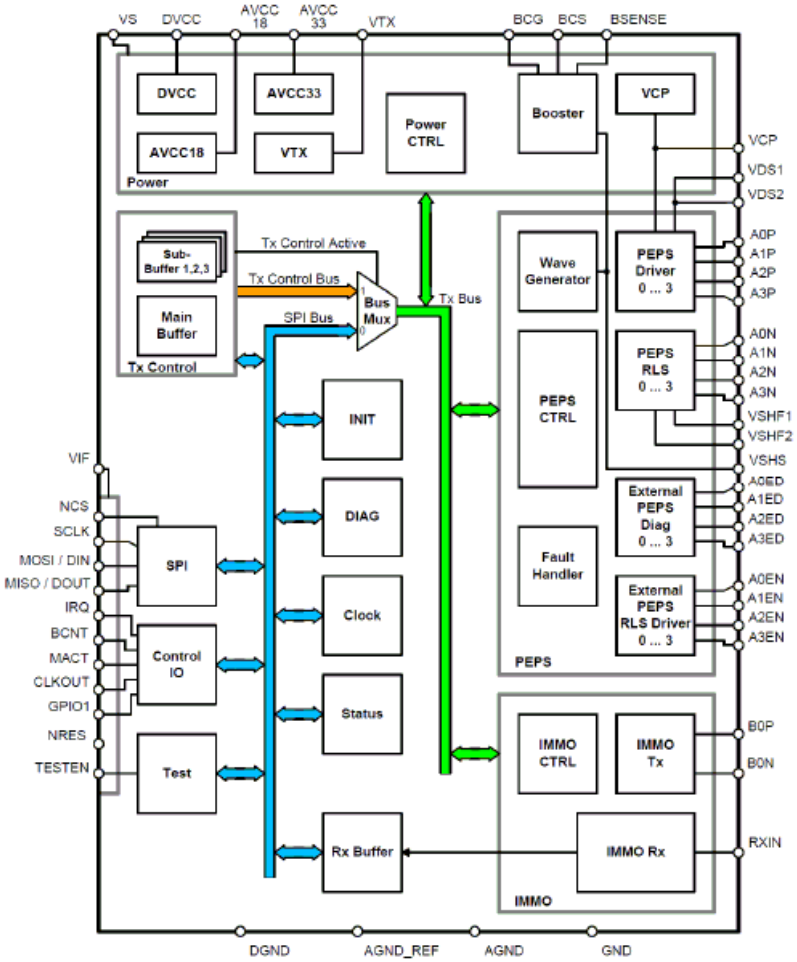

<< BACK

ATA5279C
LF Transmitter

Online Datasheet

Features:

- 6-channel antenna driver for 100…150kHz Passive Entry/Passive Start systems
- OOK modulation up to 5.7 kbps (Manchester coded)
- SINE wave generation to improve EMC
- Current regulation loop for stable RSSI measurement
- Programmable drive current, 20 steps
- Embedded command set in a buffer & timing generation to reduce host CPU load
- 2Mbit/s SPI for communication & programming
- Fault protection and reporting
- Diagnostic mode & output driver stage protection against overload and overheat
- Package QFN48 (7x7)

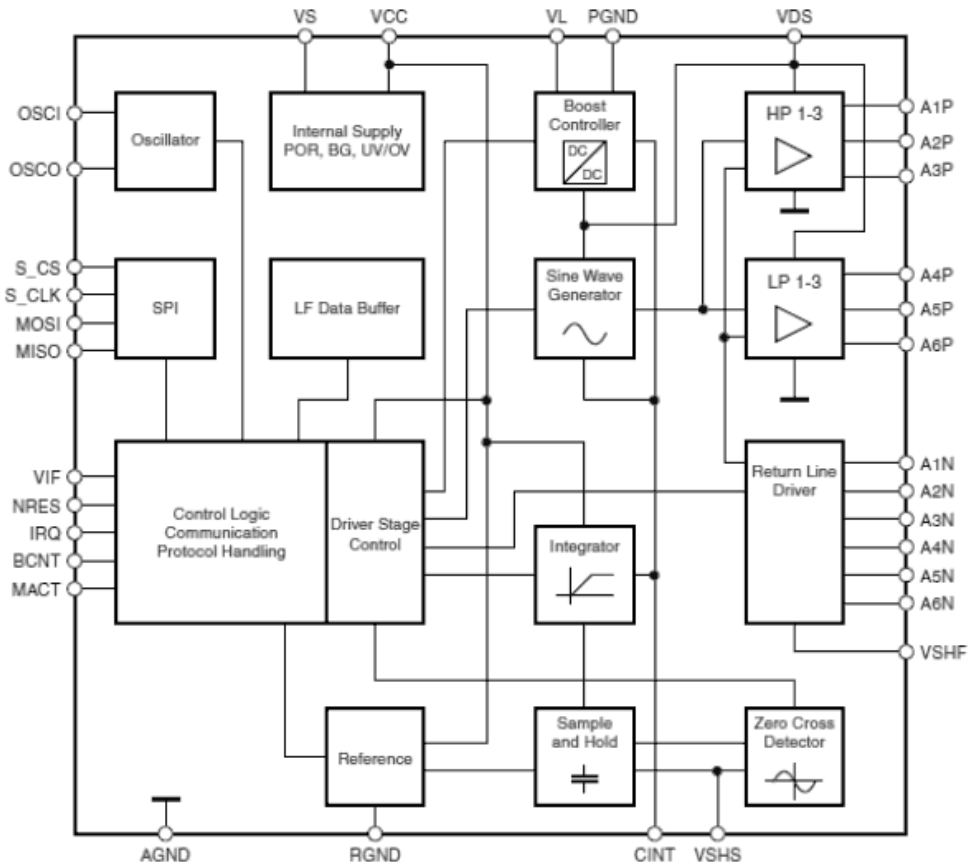

<< BACK

ATA5702

LF/RF Keyfob IC

Online Datasheet

Features:

- PEPS/Immobilizer keyfob IC with AES128 for 100…150 kHz
- 3D Immobilizer and 3D LF wake-up
- Resonance and Q trimming for 3D antenna
- Data rates: 1.95/3.9/7.8 kbit/s
- Programmable sensitivity: 100/250/500µVpp
- Current @3.9kbit/s: 5.4/4.7/4.7 µA
- Conversion time of 1 ms
- Integrated Codec's: BPLM, QPLM (Downlink), Manchester (Uplink)
- Programmable Immobilizer Stack
- Programmable Frac-N PLL UHFTransmitter
- Support 3 UHF bands with single 24.3MHz crystal
- Programmable RF Output Power: -12…14.5dBm
- UHF modulations: ASK, FSK, GFSK
- Supply voltage: 1.9V to 4.2V
- AVR core, 32kB User Flash/2 KB User EEPROM
- 19 GPIOs incl. debug wire, SPI, TWI
- Internal SRC (125kHz), MRC (1 MHz), FRC (6 MHz) oscillators
- Timers: 2 async. 8bit, 2 async. 16bit, sync. 16bit and watchdog
- Package QFN35 (5x7)

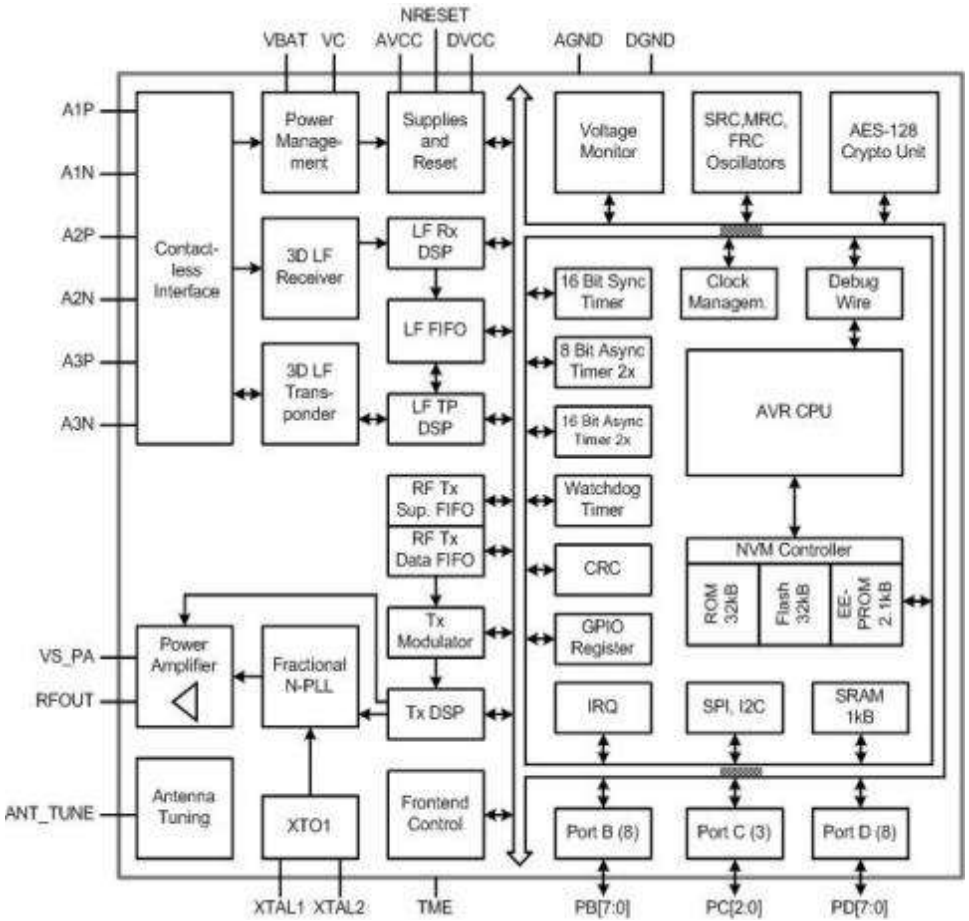

<< BACK

ATA5700

LF/RF Keyfob IC

Online Datasheet

Features:

- PEPS/Immobilizer keyfob IC with AES128 for 100…150 kHz
- 3D Immobilizer and 3D LF wake-up
- Resonance and Q trimming for 3D antenna
- Data rates: 1.95/3.9/7.8 kbit/s
- Programmable sensitivity: 100/250/500µVpp
- Current @3.9kbit/s: 5.4/4.7/4.7 µA
- Conversion time of 1 ms
- Integrated Codec's: BPLM, QPLM (Downlink), Manchester (Uplink)
- Programmable Immobilizer Stack
- Supply voltage: 1.9V to 4.2V
- AVR core, 32kB User Flash/2 KB User EEPROM
- 19 GPIOs incl. debug wire, SPI, TWI
- Internal SRC (125kHz), MRC (1 MHz), FRC (6 MHz) oscillators
- Timers: 2 async. 8bit, 2 async. 16bit, sync. 16bit and watchdog
- Package QFN35 (5x7)

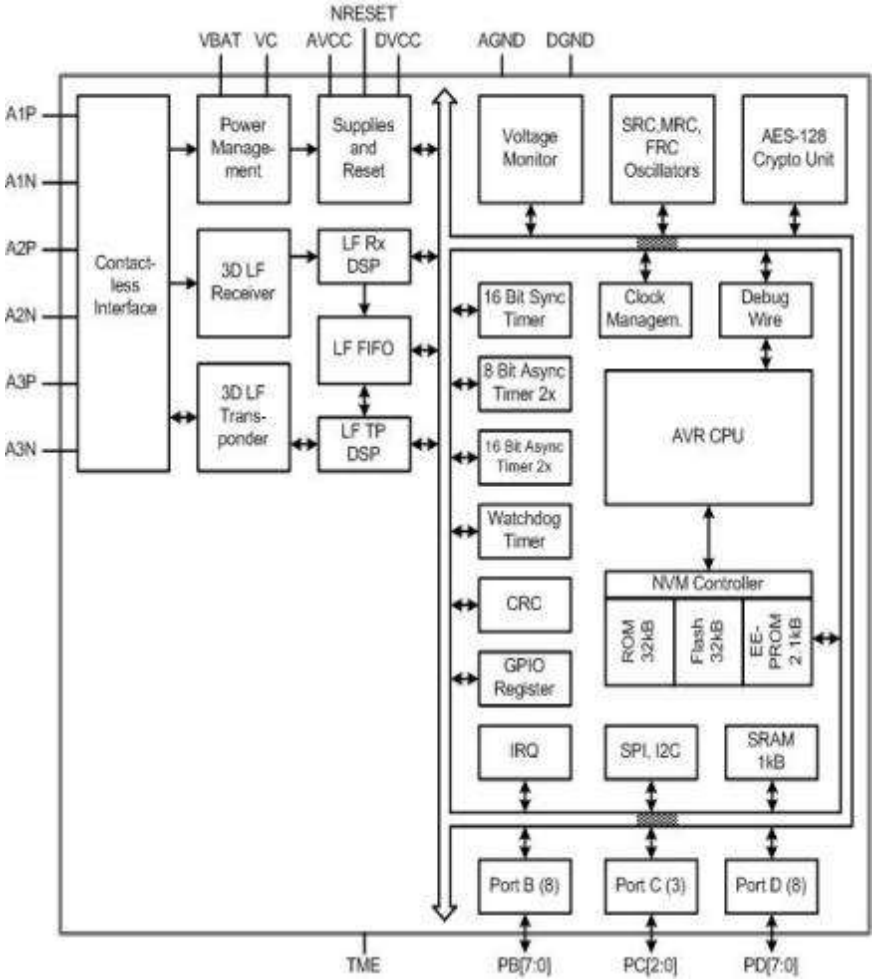

<< BACK

WILC1000

Online Datasheet

Features:

- IEEE®802.11 b/g/n 20MHz (1x1) solution
- Single spatial stream in 2.4GHz ISM band
- Integrated PA and T/R Switch
- Superior Sensitivity and Range via advanced PHY signal processing
- Advanced Equalization and Channel Estimation
- Advanced Carrier and Timing Synchronization
- Wi-Fi Direct and Soft-AP support
- Supports IEEE 802.11 WEP, WPA, WPA2 Security
- Superior MAC throughput via hardware accelerated two-level A-MSDU/A-MPDU frame aggregation and block acknowledgement
- On-chip memory management engine to reduce host load
- SPI and SDIO host interfaces
- 2/3 wire Bluetooth coexistence interface
- Operating temperature range of -40°C to +85°C
- Power save modes:
- <1µA Power Down mode typical @3.3V I/O
- 380µA Doze mode with chip settings preserved (used for beacon monitoring)
- On-chip low power sleep oscillator
- Fast host wake-up from Doze mode by a pin or host I/O transaction

Description:

The ATWILC1000-MR110PB is a low-power consumption 802.11 b/g/n IoT (Internet of Things) module, which is specifically optimized for low power IoT applications. The highly integrated module features small form factor (21.5mmx14.5mmx2.1mm) while fully integrating Power Amplifier, LNA, Switch, Power Management, and PCB antenna. With advanced security, it could be interoperable with various vendors' 802.11b/g/n Access Points in wireless LAN. The module provides SPI and SDIO to interface to host controller.

<< BACK

MRF24WN0MA

Online Datasheet

Features:

- IEEE 802.11b/g/n compliant transceiver
- 2.4 GHz IEEE 802.11n Single Stream 1x1
- SPI Interface to Host Controller (4-wire including interrupt)
- Works with Microchip's MPLAB® Harmony Integrated Software Framework
- Fully integrated wireless module with voltage regulation, crystal, RF matching circuitry, PA, LNA, and PCB trace antenna
- Integrated PCB trace antenna
- Compact surface mount module: 0.700" x 1.050" x 0.085 inch (17.8 mm x 26.7 mm x 2.2 mm)
- Castellated surface mount pads for easy and reliable PCB mounting

Description:

The MRF24WN0MA is a low-power, 2.4 GHz, IEEE 802.11n-compliant, surface mount module with all associated RF components: crystal oscillator, bypass and bias passives with integrated MAC, baseband, RF and power amplifier, and built-in hardware support for encryption..

The integrated module design frees the designer from RF and antenna design tasks and regulatory compliance testing, ultimately providing quicker time to market.

The MRF24WN0MA module is designed to be used with Microchip's MPLAB® Harmony Integrated Software Framework. The integrated framework implements the Application Programming Interface (API) that is used for command and control, for management, and data packet traffic. The MPLAB Harmony basic framework is free to download at http://www.microchip.com/harmony.

<< BACK

MRF24WG0MA/MB

Online Datasheet

Features:
•EEE 802.11-compliant RF transceiver
• Serialized unique MAC address
• Data rate: 1 to 11 Mbps for 802.11b / 6 to 54 Mbps for 802.11g
• Compatible with IEEE 802.11b/g/n networks
• Small size: 21 mm x 31 mm 36-pin Surface Mount module
• Integrated PCB antenna (MRF24WG0MA)
• External antenna option (MRF24WG0MB) with ultra-miniature coaxial (U.FL) connector
• Easy integration into final product – accelerates product development, provides quicker time to market
• Radio regulation certification for United States (FCC), Canada (IC), and Europe (ETSI)
• Designed for use with Microchip microcontroller families (PIC18, PIC24, dsPIC33, and PIC32) with downloadable Microchip TCP/IP Stack

RF/Analog Features:
• ISM Band 2.400 to 2.484 GHz operation
• Channels 1-11
• DSSS/OFDM modulation
• Application throughput: 4500 kbps
• -95 dBm Typical sensitivity at 1 Mbps
• +18 dBm Typical 802.11b TX power with control
• +16 dBm Typical 802.11g TX power with control
• Integrated low phase noise VCO, RF frequency synthesizer, PLL loop filter and PA
• Integrated RSSI ADC and I/Q DACs, RSSI readings available to hos

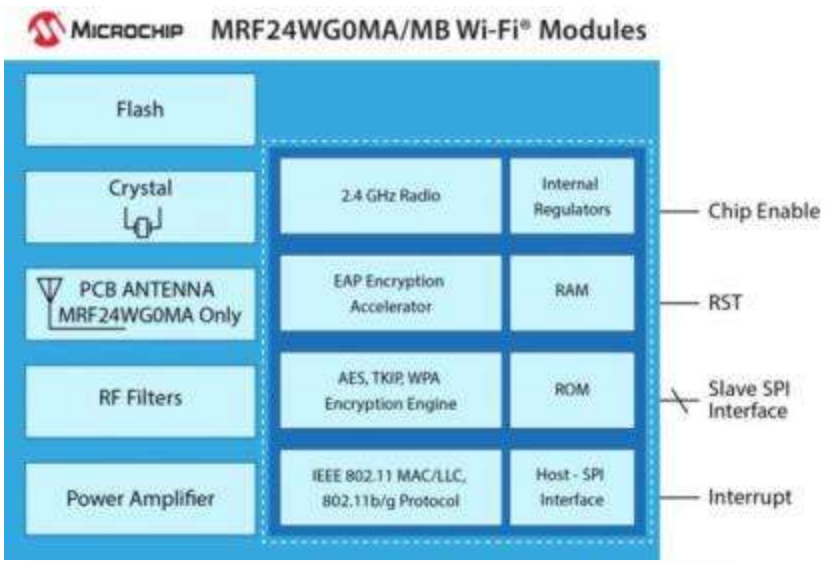

<< BACK

ATWINC1500

Online Datasheet

Features:

- Fully-certified single-band 2.4GHz b/g/n Wi-Fi module
- Extreme low power
- Compact footprint: 21.5 x 14.5 x 2.1 mm
- Integrated PCB antenna
- Operating voltage: 3.0V to 4.2V
- Serial host interface: SPI or UART
- Security protocols supported: WPA/WPA2 Personal, TLS, SSL
- Network services: DHCP, DNS, TCP/IP (IPv4), UDP, HTTP, HTTPS
- Wi-Fi Direct and SoftAP support
- WINC1500 SoC available in small QFN package

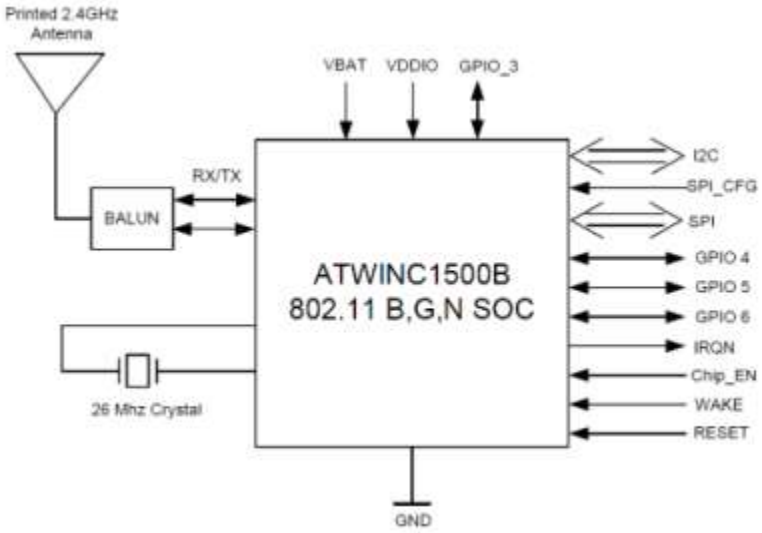

Description:

Microchip's WINC1500-MR210PB is a low-power consumption 802.11 b/g/n IoT (Internet of Things) module, which is specifically optimized for low power IoT applications. This highly integrated module features small form factor (21.5mm x 14.5mm x 2.1mm) while fully integrating Power Amplifier, LNA, Switch, Power Management, and PCB antenna. With seamless roaming capabilities and advanced security, it is inter-operable with various vendors' 802.11b/g/n Access Points in wireless LAN. The module provides SPI and UART to interface to the host controller.

<< BACK

RN1723

Online Datasheet

Features:

- Ultra-low power for years of battery life
- Firmware configurable transmit power: 0dBm to +12dBm
- Hardware interfaces: UART and SPI Slave
- Supports SoftAP and Infrastructure networking modes
- RF pad for external antenna
- Advanced SSL/TLS security running on external PIC® MCU
- Full on-board TCP/IP/UDP stack (no external drivers required)
- Efficient active and standby modes:
    - 4µ Sleep mode
    - 15mA DOZE (Standby) mode
    - 40mA Receive
    - 120mA Transmit

RN1723 Low-Power Wi-Fi® Module
(Part # RN1723)

Description:

The RN1723 is a small form factor, ultra-low power embedded TCP/IP/UDP Wi-Fi module measuring only 27 x 18 x 3.1 mm. The RN1723 is a full-featured 802.11 b/g surface mount module that is footprint compatible with the RN171 Wi-Fi module. With an impressive 4µA Sleep mode, and a new power-saving DOZE mode, the RN1723 is extremely power efficient, making it ideal for a vast range of applications that require many years of battery life.

Additionally, the RN1723 offers advanced SSL/TLS security that runs on an external PIC32 MCU enabling highly secure client/server communication. The RN1723 is configured via simple ASCII commands for ease of development and quick time to market.

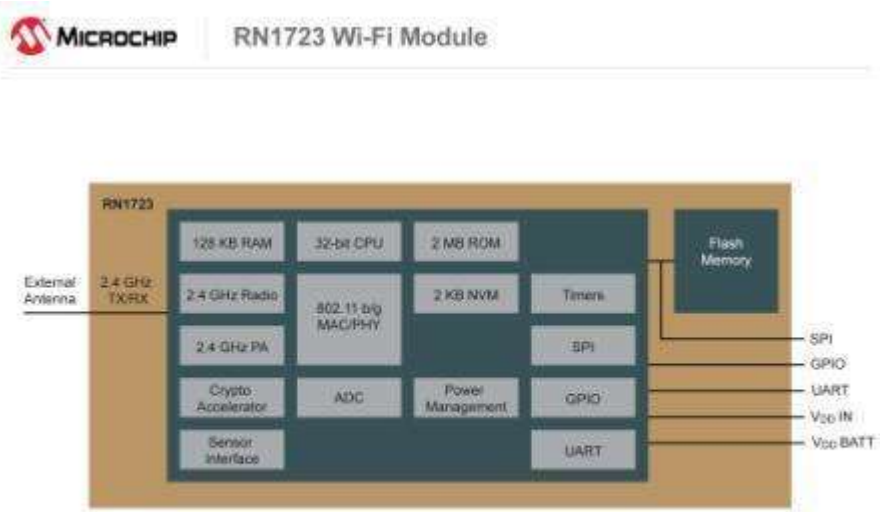

<< BACK

SAMW25

Online Datasheet

Features:

- IEEE 802.11 b/g/n (1x1) for up to 72 Mbps
- Includes a SAMD21 ARM® Cortex®-M0+ for user application
- Integrated PA and T/R switch
- Superior sensitivity and range via advanced PHY signal processing
- Wi-Fi Direct, station mode and SoftAP support
- Supports IEEE 802.11 WEP, WPA
- On-chip memory management engine to reduce host load
- 4 Mbit internal flash memory with OTA firmware upgrade
- Serial host interface SPI or UART
- TCP/IP protocol stack (client/server) sockets applications
- Security protocols; WPA/WPA2 Personal, TLS, and SSL
- Network services; DHCP, DNS, TCP/IP (IPv4), UDP, HTTP, and HTTPS
- Operates without a host in most applications
- Compact footprint: 33.86 x 14.88 mm
- FCC, CE, IC, and TELEC Certified

Description:

Microchip's SmartConnect SAMW25 is a low-power Wi-Fi certified module. This highly integrated module offers the ideal solution for designers seeking Wi-Fi connectivity. The SAMW25 integrates 802.11 IP stack on top of the Wi-Fi core and fully covers RF certifications.

The SAMW25 opens the door to the Internet of Things for a vast array of battery-powered devices and applications requiring the integration of WLAN connectivity without compromising on cost and power consumption. The SAMW25 module is based on Microchip's industry-leading WINC1500 Wi-Fi core combined with the latest ARM® Cortex®-M0+ based microcontroller technology. This turnkey system provides an integrated software solution with application and security protocols such as TLS and integrated network services (TCP/IP stack).

<< BACK

SAMB11-MR210CA

Online Datasheet

Features:

- BLE 4.1 compliant SoC and protocol stack
- Lowest BLE power consumption in industry
- ARM Cortex-M0 with 128KB RAM, 256KB flash
- Small package format: 22.88 x 15.36 mm
- Wide operating voltage range: 2.3V – 3.6V
- Fully-certified (FCC, ETSI/CE, TELEC)
- RoHS compliant
- SAMB11 SoC available in small QFN package

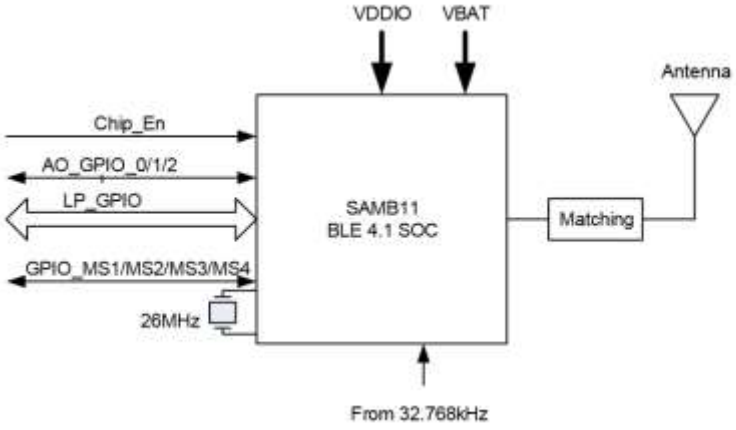

Description:

The SAMB11-MR210CA is an ultra-low power Bluetooth® SMART (BLE 4.1) module with Integrated MCU, Transceiver, Modem, MAC, PA, TR Switch, and Power Management Unit (PMU). It is a standalone Cortex®-M0 applications processor with embedded Flash memory and BLE connectivity.

The qualified Bluetooth Smart protocol stack is stored in dedicated ROM, the firmware includes L2CAP service layer protocols, Security Manager, Attribute protocol (ATT), Generic Attribute Profile (GATT),and the Generic Access Profile (GAP). Additionally, application profiles such as Proximity, Thermometer, Heart Rate, Blood Pressure, and many others are supported and included in the protocol stack.

The module contains all circuitry required including a ceramic high gain antenna, 26MHz crystal, and PMU circuitry. The customer simply needs to place the module on the board, provide power and a 32KHz Real Time Clock or crystal.

<< BACK

BTLC1000-MR110CA

Online Datasheet

Features:

- Ultra-low power Bluetooth SMART (BLE 4.1) module
- Lowest BLE power consumption in industry
- Small form factor (12.70 X 20.15 mm)
- Integrated chip antenna
- Optimized system cost - high level of integration on chip reduces external Bill of Material significantly
- Wide operating voltage range: 1.8 – 4.3V
- Parameter host interface: UART
- Fully-certified (FCC, ETSI/CE, TELEC)
- RoHS compliant
- BTLC1000 SoC available in small QFN or WLCSP package

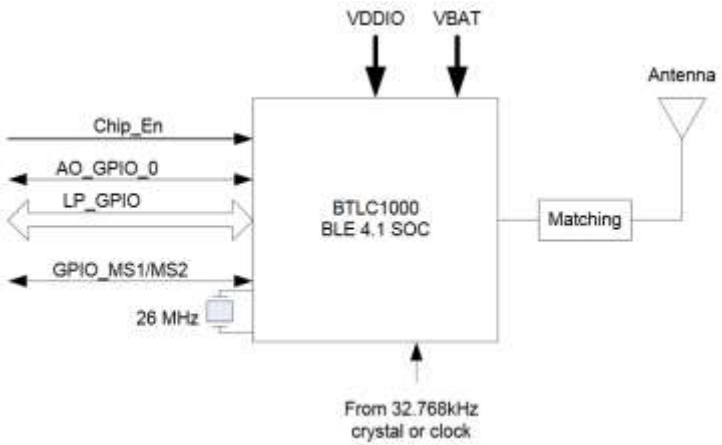

Description:

The BTLC1000-MR110CA is an ultra-low power Bluetooth® SMART (BLE 4.1) module with Integrated Transceiver, Modem, MAC, PA, TR Switch, and Power Management Unit (PMU). It can be used as a Bluetooth Low Energy link controller or data pump with external host MCU

The qualified Bluetooth Smart protocol stack is stored in dedicated ROM, the firmware includes L2CAP service layer protocols, Security Manager, Attribute protocol (ATT), Generic Attribute Profile (GATT),and the Generic Access Profile (GAP). Additionally, application profiles such as Proximity, Thermometer, Heart Rate, Blood Pressure and many others are supported and included in the protocol stack.

The module contains all circuitry required including a ceramic high gain antenna, 26MHz crystal,and PMU circuitry. The customer simply needs to place the module on his board and provide power and a 32KHz Real Time Clock or crystal.

<< BACK

RN4020

Online Datasheet

Features:

- Fully-certified Bluetooth® version 4.1 module
- On-board embedded Bluetooth low energy stack
- Simple ASCII command interface over UART
- Multiple IOs for control and status
- Secure AES128 encryption
- GAP,GATT,SM, L2CAP and integrated public profiles
- Create custom services using command API
- Data streaming with Microchip's Low Energy Data Profile (MLDP)
- Scripting for standalone module operation with analog and digital data collection
- 7 dBm transit power for 100m+ range
- Field-upgradeable via the UART interface or over-the-air
- Software configurable role as peripheral or central, client or server
- Compact form factor 11.5 x 19.5 x 2.5mm
- Low power modes
- UART interface, GPIO, ADC
- 64KB internal serial flash
- Castellated SMT pads for easy and reliable PCB mounting
- Environmentally friendly, RoHS compliant
- Certifications: FCC, IC, CE, QDID

Description:

The RN4020 is a fully-certified, Bluetooth Version 4.1 low energy module for designers who want to easily add low power wireless capability to their products. The small form factor, surface mount module has the complete Bluetooth stack on-board and is controlled via simple ASCII commands over the UART interface. The RN4020 also includes all Bluetooth SIG profiles, as well as MLDP (Microchip Low-energy Data Profile) for custom data. Developers can utilize the scripting feature to enable standalone operation without a host MCU or Processor. The RN4020 can be remote controlled by another module over a secure connection and can be updated via the UART interface or over-the-air. The module has a built-in high performance PCB antenna optimally tuned for long range, typically over 100 meters. The compact size, 11.5 x 19.5 x 2.5mm, enables ease of integration in size-constrained applications. The RN4020 can be used with any low cost microcontroller for intelligent Bluetooth Low Energy applications.

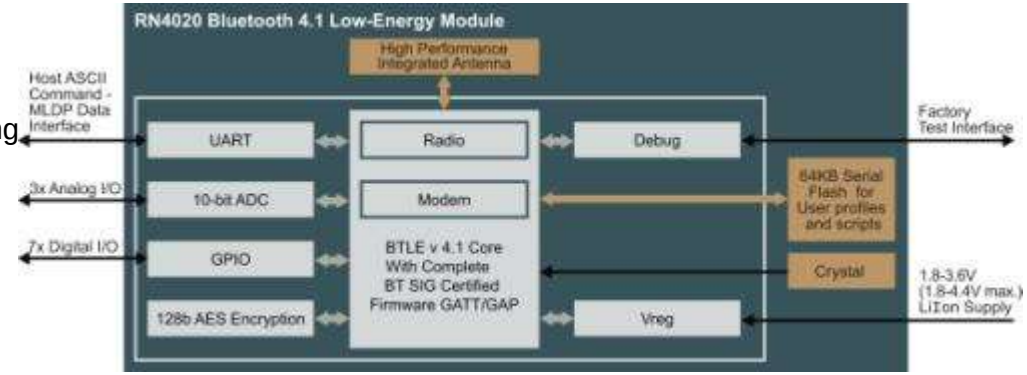

<< BACK

RN4870

Online Datasheet

Features:

- Bluetoooth® Smart 4.2 BLE compliant
- ASCII interface commands for communication with the host microcontroller
- Scripting features to allow for operation without a host microcontroller.
- Increased privacy features
- White list for determining connections
- MLDP compatibility with RN4020
- Remote configuration capability
- 1.9V~3.6V operating range
- Antenna: Ceramic chip Antenna or external antenna connection

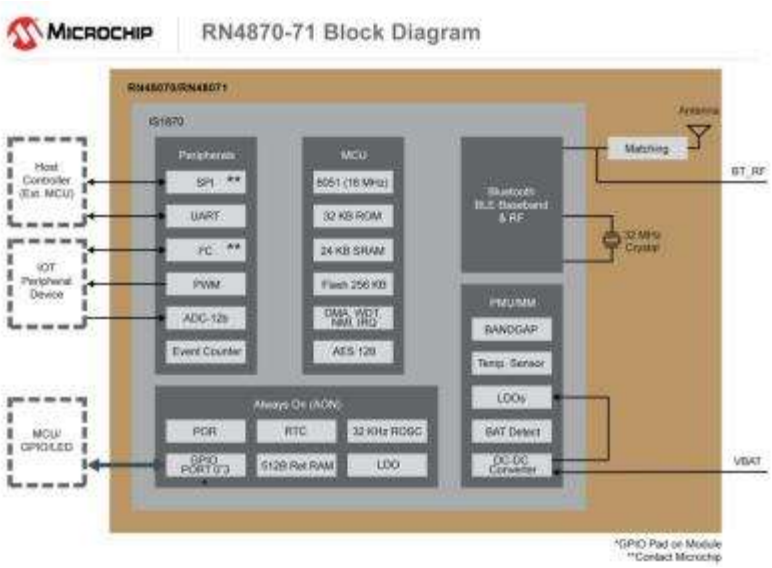

Description:

The RN4870 Bluetooth 4.2 Low-Energy module is designed for easy implementation into a broad range of applications. Supporting the latest Bluetooth standard, it delivers up to 2.5x throughput improvement and more secure connections vs. Bluetooth 4.1 based products. Developers can easily interface to the device via a standard UART interface, available on most Microcontrollers and Processors.

The RN4870 has a completely integrated Bluetooth software stack, and offers a shielded regulatory certified version with built-in antenna. Developers are freed from the complexities of Bluetooth Software and RF development and can simply utilize the RN4870 as a wireline replacement. Perfect for IoT (Internet of Things) applications, when interfaced to a BLE enabled smartphone or Bluetooth Internet Gateway, applications can be monitored, controlled and updated from anywhere in the world.

<< BACK

RN4678

Online Datasheet

Features:

- Fully-certified Bluetooth Version 4.2 Module
- Bluetooth Classic and Bluetooth Low-Energy Support
- Easy to use RN-style ASCII interface
- On-board embedded Bluetooth Stack (GAP, SDP, SPP, GATT)
- Easy to use transparent mode for data transfer via UART
- Multiple I/O pins for control and status
- Secure AES128 encryption
- +2 dBm Transmit Power
- Receiver Sensitivity -90 dBm (Classic); -92 dBm (LE)
- Firmware can be field upgradable via UART
- Compact surface mount module: 22 x 12 x 2.4 mm
- Temperature Range from -20°C to +70°C
- Operating Voltage: 3.3 – 4.3V
- Bluetooth SIG Certified
- Worldwide regulatory certifications

Description:

The RN4678 is a fully certified Bluetooth version 4.2 (BR/EDR/LE) Dual Mode module, which enables the designer to easily add classic Bluetooth and Bluetooth Smart capability to their products. Delivering local connectivity for the Internet of Things (IoT), the RN4678 bridges the product to Smart Phones and Tablets for convenient data transfer, control and access to cloud applications.

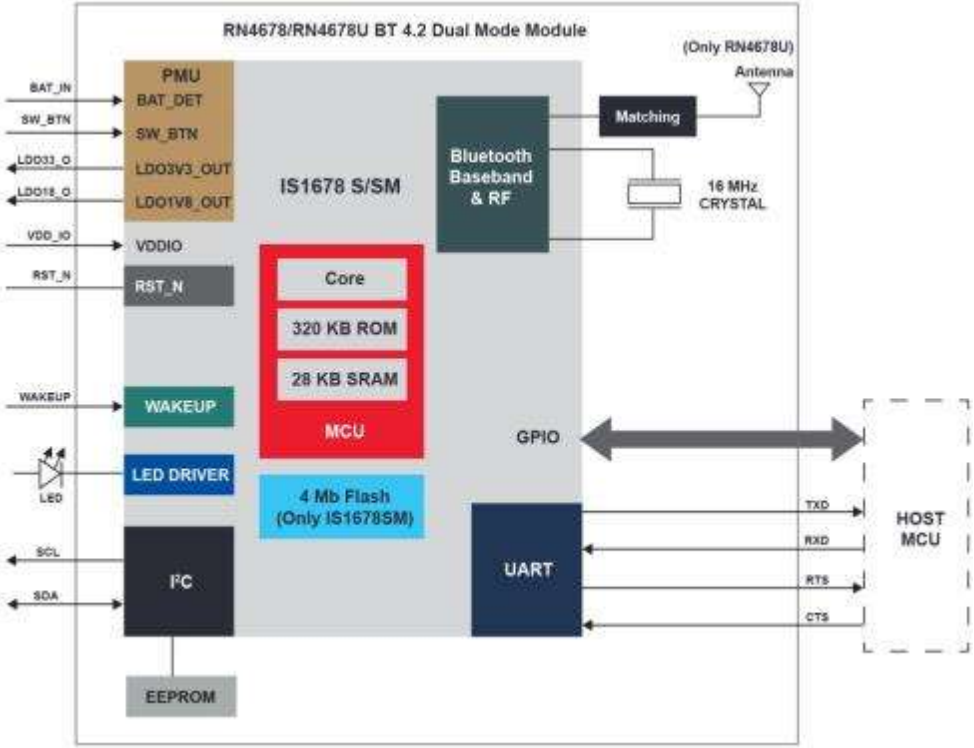

<< BACK

BM78

Online Datasheet

Features:

- Fully certified Bluetooth Version 4.2 Module (BM78SPPx5MC2-0002AA)
- Bluetooth Classic and Bluetooth Low-Energy Support
- Bluetooth SIG Certified
- On-board embedded Bluetooth Stack
- Easy to use transparent mode for data transfer via UART
- Easy to configure with Windows® GUI or direct by MCU
- Multiple I/O pins for control and status
- Secure AES128 encryption
- GAP, SDP, SPP, GATT profiles
- Firmware can be field upgradable via UART
- Compact surface mount module: 22 x 12 x 2.4 mm
- Castellated surface mount pads for easy and reliable host PCB mounting
- Worldwide regulatory certifications

Description:

The BM78 is a fully-certified Bluetooth® Version 4.2 (BR/EDR/LE) module for designers who want to easily add dual mode Bluetooth wireless capability to their products. Delivering local connectivity for the Internet of Things (IoT), the BM78 bridges your product to Smart Phones and Tablets for convenient data transfer, control and access to cloud applications.

FIGURE 1-1: INTERNAL BLOCK DIAGRAM OF BM78

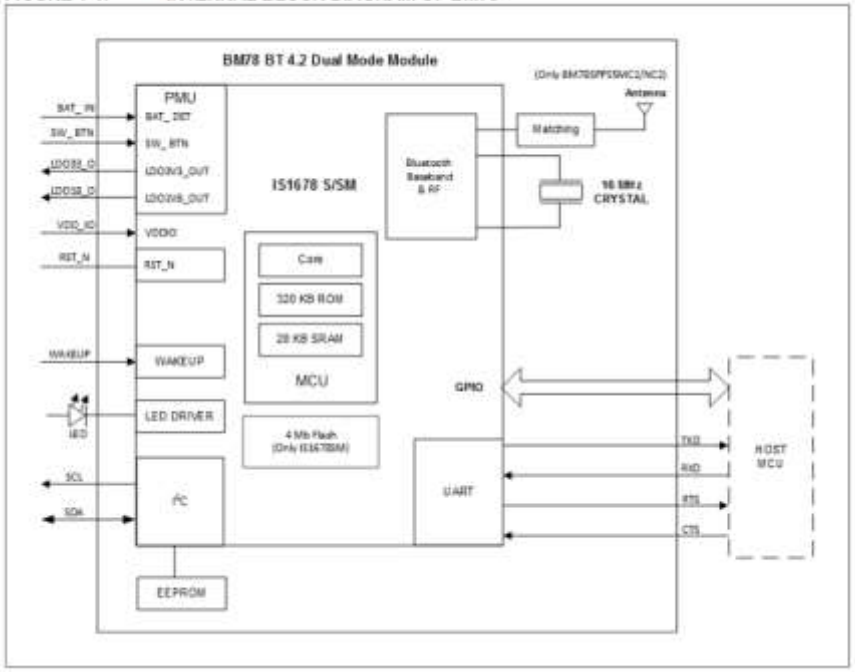

<< BACK

BM70

Online Datasheet

Description:

The BM70 Bluetooth 4.2 Low-Energy module is designed for easy implementation into a broad range of applications. Supporting the latest Bluetooth standard, it delivers up to 2.5x throughput improvement and more secure connections vs. Bluetooth 4.1 based products. Developers can easily interface to the device via a standard UART interface, available on most Microcontrollers and Processors.

The BM70 has a completely integrated Bluetooth software stack, and offers a shielded regulatory certified version with built-in antenna. Developers are freed from the complexities of Bluetooth Software and RF development and can simply utilize the BM70 as a wireline replacement. Perfect for IoT (Internet of Things) applications, when interfaced to a BLE enabled smartphone or Bluetooth Internet Gateway, applications can be monitored, controlled and updated from anywhere in the world.

Features:

- Bluetooth® Smart 4.2 BLE compliant
- 1.9V~3.6V operating range
- UART/ I2C/ SPI interface supported
- 3 x PWM supported
- Main Crystal : 32MHz
- Temperature sensor supported
- 12 bits ADC supported for 8CH input ports and battery voltage detection
- Wake up by any GPIO
- Peak current: TX 13mA/RX 13mA with Buck,@ VBAT=3.0V
- RSSI Monitor

RF/Analog Features:

- ISM Band 2.402 to 2.480 GHz operation
- Channels 0-39
- Rx Sensitivity: -90 dBm@ BLE, in typical
- Tx Power: +2 dBm
- RSSI monitor

Antenna:

- Ceramic Chip Antenna (BM70BLES1FC2/BM71BLES1FC2)
- External Antenna Connection (BM70BLE01FC2/BM71BLES1FC2)

<< BACK

RN41 / RN42

Online Datasheet

Features:

•Fully certified Class 1 (RN41), Class 2 (RN42) Bluetooth 2.1 + EDR module
•Onboard embedded Bluetooth stack (no host processor required)
•UART (SPP or HCI) and USB (HCI only) data connection hardware interfaces
•Supports Bluetooth data link to iPhone/iPad/iPod Touch
•Supports HID profile for making accessories such as keyboards, mouse, pointing devices
•Programmable low power modes
•Secure communications, 128 bit encryption
•Error correction for guaranteed packet delivery
•UART local and over-the-air RF configuration
•Auto-discovery/pairing requires no software configuration (instant cable replacement)
•Castellated SMT pads for easy and reliable PCB mounting
•The standard part number (RN41-I/RM / RN42-I/RM) supports SPP and DUN profiles
•Available in multiple configurations: Apple-compatible firmware (RN4xAPL-I/RM), HCI mode (RN4xHCI-I/RM), HID mode (RN4xHID-I/RM), USB mode (RN4xU-I/RM), and socket module (RN4xSM-I/RM)
•Available without antenna (RN41N-I/RM)
•Bluetooth SIG qualified

Description:

The RN41 / RN42 is a small form factor, low power, simple to integrate Bluetooth radio for OEMs adding wireless capability to their products. The RN41 / RN42 is perfect for battery powered applications and by default is ready to use in the SPP (Serial Port Profile) configuration. It uses only 250 µA in sleep mode while still being discoverable and connectable. Multiple low power modes available allow you to dial in the lowest power profile for your application. The RN41 / RN42 supports multiple Bluetooth profiles, is fully certified, and is simple to design in, making it a complete embedded Bluetooth solution. The RN41 / RN42 is also available without antenna (RN41N / RN42N). This is useful when the application requires an external antenna. The RN41N / RN42N is form, function, and pin compatible with the RN41 / RN42.

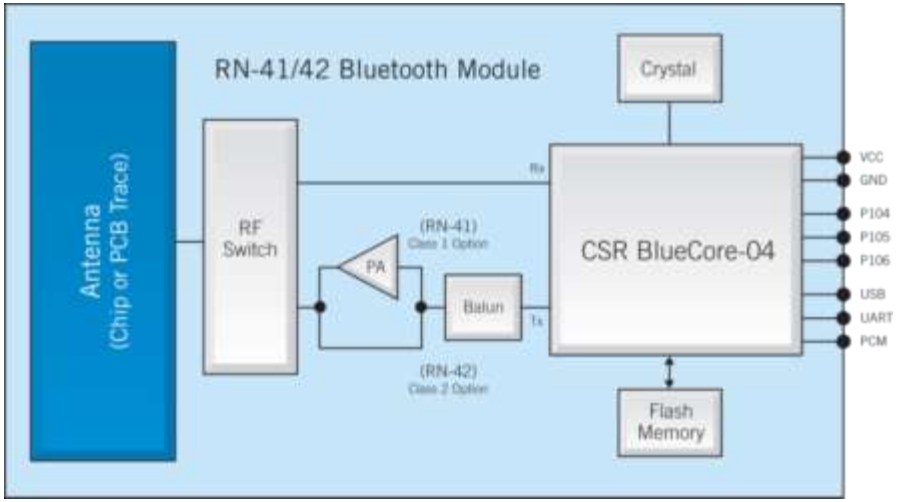

<< BACK

RN52

Online Datasheet

Features:

•Fully certified Bluetooth version 3.0 audio module, fully compatible with Bluetooth version 2.1+EDR, 1.2, and 1.1
•Software configurable through commands over UART console interface
•Embedded Bluetooth stack profiles: SPP, A2DP, HFP/HSP, and AVRCP
•Supports iAP profile discovery for iPhone® and iPod® Bluetooth accessories
•Available as an A2DP audio source or sink
•Postage-stamp-sized form factor, 13.5 x 26 x 2.7mm
•Dual-channel, differential audio input and output for highest quality audio
•External audio codecs supported via I2S and S/PDIF interface
•Castellated SMT pads for easy and reliable PCB mounting
•Additional support for codecs such as aptX®, AAC, MP3, and others
•Environmentally friendly, RoHS compliant

Description:

The RN52 Bluetooth audio module provides a fully integrated solution for delivering high-quality stereo audio in a small form factor. It combines a Class 2 Bluetooth radio with an embedded DSP processor, controlled and configured by simple ASCII commands and GPIO. It integrates RF, a baseband controller, and DSP, making it a complete Bluetooth audio wireless link. The RN52 supports HSP/HFP, A2DP, AVRCP, SPP, and iAP profiles and includes support for codecs such as SBC, aptX®, and AAC. It provides a UART interface, GPIO, stereo speaker outputs, stereo microphone inputs, and a USB port.

Bluetooth® Audio Module (Part # RN52-I/RM)

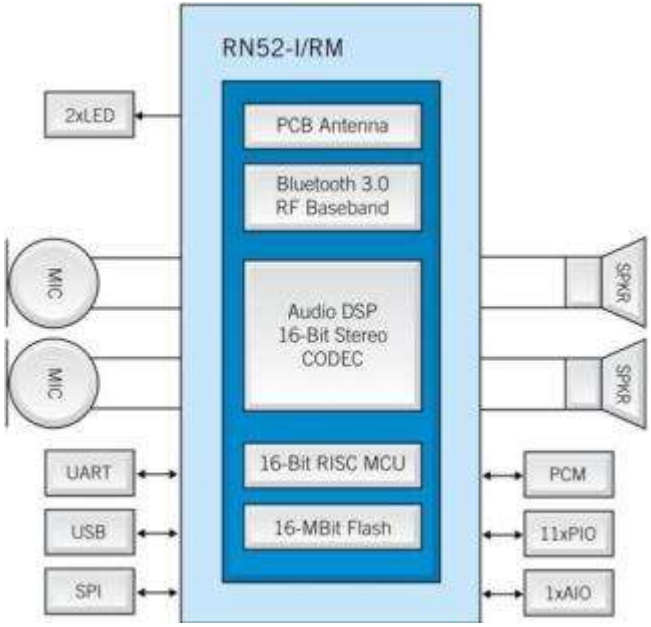

<< BACK

RN41XV / RN42XV

Online Datasheet

Features:

•Fully certified Bluetooth® version 2.1 module, supports version 2.1 + Enhanced Data Rate (EDR)
•Backwards-compatible with Bluetooth version 2.0, 1.2, and 1.1
•Pin compatible with widely used 2 x 10 (2mm) socket typically used for 802.15.4 applications
•Low power: 30 mA connected, < 10 mA sniff mode
•UART (SPP or HCI) and USB (HCI only) data connection interfaces
•Sustained SPP data rates: 240 Kbps (slave), 300 Kbps (master)
•HCI data rates: 1.5 Mbps sustained, 3.0 Mbps burst in HCI mode
Embedded Bluetooth stack profiles included (requires no host stack): GAP, SDP, RFCOMM, and L2CAP protocols, with SPP, HID and DUN profile support
•Bluetooth SIG certified
•Certifications: FCC, IC, CE
•Environmentally friendly, RoHS compliant
•2 antenna options available: Chip antenna (RN41XVC-I/RM)and U.FL connector for external antenna (RN41XVU-I/RM)

Description:

The RN41XV module provides drop-in, certified Bluetooth connectivity for existing systems using 802.15.4 modules. Based on the popular 2 x 10 (2mm) socket footprint often found in embedded applications, the RN41XV offers a complete wireless solution for customers looking to migrate to a standard protocol without modifying existing hardware. The RN41XV is built upon Roving's RN41 low power Bluetooth module. The module has an embedded Bluetooth stack and supports multiple interface protocols and profiles including the commonly used SPP and HID profiles.

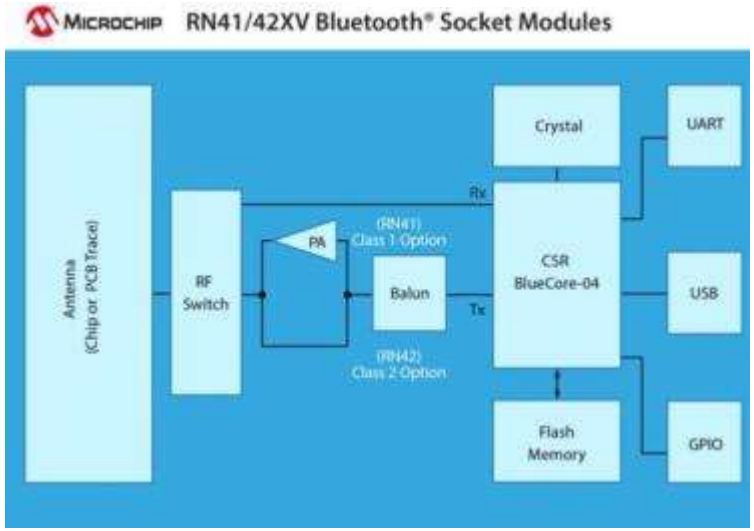

<< BACK

RN41SM / RN42SM

Online Datasheet

Features:

•Socket module with UART interface
• 3.3/5V logic CMOS I/O (RS-232 as well)
• Fully qualified Bluetooth 2.1/2.0/1.2/1.1 module
• Bluetooth v2.1+EDR support
• Low power *(8-30 mA connected, 2 mA idle)*
• UART supports baud rates from 1,200 to 3Mbit
• Sustained SPP data rates - 240Kbps (slave), 300Kbps (master)
• HCI data rates - 1.5Mbps sustained, 3.0Mbps burst in HCI mode
• HCI mode, or SPP/DUN software stacks available.
• Embedded Bluetooth stack profiles included *(requires no host stack): GAP, SDP, RFCOMM* and L2CAP, with SPP, DUN and HID profiles.
• RS232 on board with power enable on IO pin.
• Bluetooth SIG Qualified, End Product Listing
• Class 1 high power amplifier (RN41SM only) with on board ceramic RF chip antenna.
•Certifications: FCC, ICS, CE
•Environmentally friendly, RoHS compliant

Description:

The RN41SM / RN42SM is a though hole, low power, highly flexible Bluetooth socket module. This module supports SPP/DUN and HCI Bluetooth interface protocols, is simple to design in and fully certified. With its high performance on chip antenna and support for Bluetooth® Enhanced Data Rate (EDR), the RN41 / RN42 delivers up to 3 Mbps data rate for distances to 100M / 20M. The RN41/RN42 socket module is the perfect method for adding Bluetooth wireless capability to existing products without redesign, saving you significant time and money.

Block Diagram:

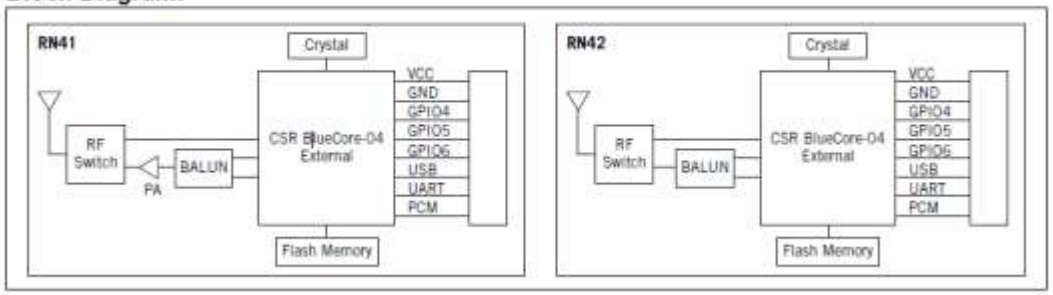

<< BACK

MRF89XA/M8A/M9A

Online Datasheet

Features:
- Fully integrated ultra low-power, sub-GHz transceiver
- Wide-band half-duplex transceiver
- Supports proprietary sub-GHz wireless protocols
- Simple 4-wire SPI-compatible interface
- CMOS/TTL-compatible I/Os
- On-chip oscillator circuit
- Dedicated clock output
- Operating voltage: 2.1V-3.6V
- Low-current consumption
- Supports Industrial temperature
- Complies with ETSI EN 300 220 and FCC part 15
- Small, 32-pin TQFN package

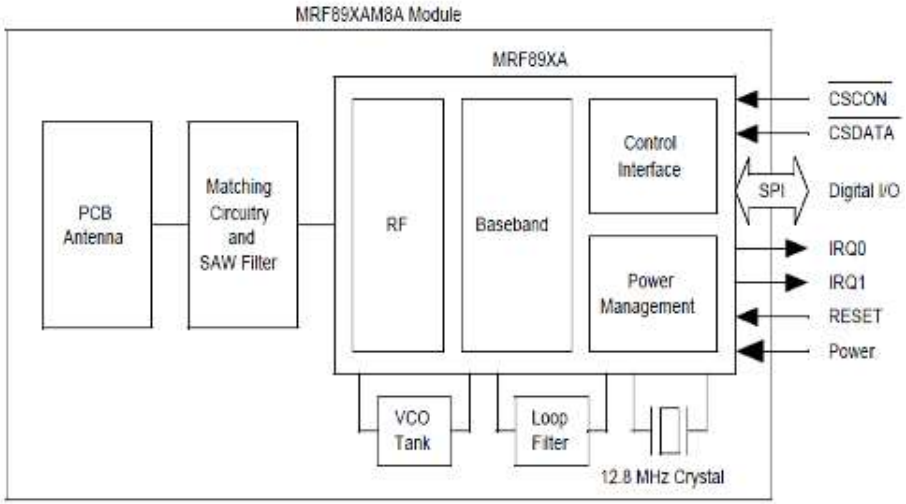

Module Features

•Module designed from the MRF89XA integrated ultra low-power, sub-GHz transceiver IC.
•The MRF89XAM8A is an 868 MHz radio transceiver module
•The MRF89XAM9A is a 915 MHz radio transceiver module
- Supports proprietary sub-GHz wireless protocols
- Simple, SPI Interface with Interrupts
- Small size: 0.7" x 1.1" (17.8 mm x 27.9 mm), surface mountable
- Integrated crystal, internal voltage regulator, matching circuitry and Printed Circuit Board (PCB) antenna
- Easy integration into final product
- Compatible with Microchip's Microcontroller families (PIC16, PIC18, PIC24, dsPIC33 and PIC32)
- Conforms to the following ETSI standards:

- EN 300 220-2 V2.3.1 (2001–02)
-EN 301 489-3 V1.4.1 (2002–08)

<< BACK

MRF49XA

Online Datasheet

Features:
- Fully Integrated Sub-GHz Transceiver
- Supports Proprietary Sub-GHz Wireless Protocols
- 4-Wire Serial Peripheral Interface (SPI)
- CMOS/TTL Compatible I/Os
- Clock and Reset Signals for Microcontroller
- Integrated 10 MHz Oscillator Circuitry
- Integrated Low Battery Voltage Detector
- Supports Power-Saving Modes
- Operating Voltage: 2.2V-3.8V
- Low-Current Consumption, Typically:
- 11mA in RX mode
- 15mA in TX mode
- 0.3ìA in Sleep mode
- Industrial Temperature Range
- 16-Pin TSSOP Package

RF/Analog Features
- Supports ISM Band Sub-GHz Frequency Ranges (433, 868 and 915 MHz)
- Modulation Technique: FSK with FHSS Capability
- Supports High Data Rates:
- Digital mode 115.2 kbps, max.
- Analog mode 256 kbps, max.
- Differential RF Input/Output:
- -110 dBm Typical Sensitivity with 0 dBm Maximum Input Level
- +7 dBm Typical Transmit Output Power
- High-Resolution Programmable PLL Synthesizer
- Integrated Power Amplifier
- Integrated Low Phase Noise VCO Frequency
- Synthesizer and PLL Loop Filter
- Automatic Frequency Control

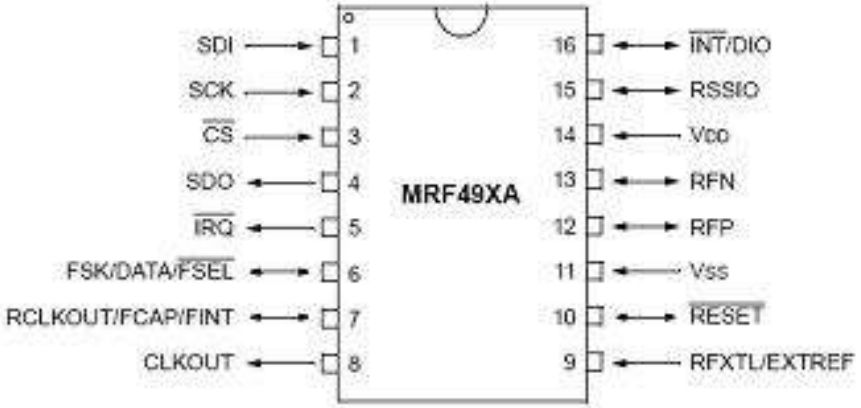

<< BACK

MRF24XA

Online Datasheet

MRF24XA is an IEEE 802.15.4™ Standard compliant 2.4 GHz RF transceiver with feature extensions. MRF24XA integrates the PHY and MAC functionality in a single chip solution. MRF24XA implements a low-cost, low-power, high data rate (125 kbps to 2 Mbps) Wireless Personal Area Network (WPAN) device.

Features:

IEEE 802.15.4™-2003 and IEEE 802.15.4-2006 Standard Compliant RF transceiver

- Multiple air data rates:
  - 250 kbps (IEEE 802.15.4)
  - 125, 500, 1000, 2000 kbps, co-existence with standard networks
- Configurable TX output power: -17.5 to 0 dBm
- Frame header duration scales with the selected data rate
- On-the-fly, per-frame air-data-rate detection (link-by-link independent air data rates)
- Inferred destination addressing (to further save on framing overheads; optional)

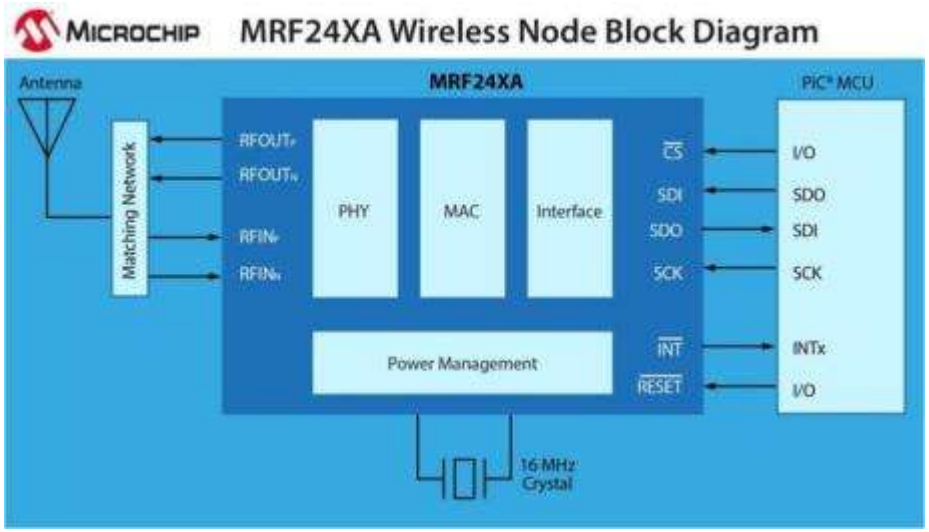

<< BACK

MRF24J40/MA/MD/ME

Online Datasheet

MRF24J40 is a complete IEEE 802.15.4 radio and operates in the 2.4GHz freq band. The MRF24J40 supports ZigBee™, MiWi™ protocols and proprietary protocols to provide an ideal solution for wireless sensor networks, home automation, building automation and consumer applications.

The MRF24J40MA/MD/ME are all modules built with the MRF24J40 chip

Module Features:

- IEEE Std. 802.15.4™ Compliant RF Transceiver
- Supports ZigBee®, MiWi™, MiWi™ P2P and Proprietary Wireless Networking Protocols
- Small Size: 0.7” x 1.1” (17.8 mm x 27.9 mm), Surface Mountable
- Integrated Crystal, Internal Voltage Regulator, Matching Circuitry and PCB Antenna
- Easy Integration into Final Product
- Radio Regulation Certification for United States (FCC), Canada (IC) and Europe (ETSI)
- Compatible with Microchip Microcontroller Families
- Up to 400m Range (outdoor, line-of-sight)

Operational:

- 20/10/5/2.5 MHz Clock Output:
- Operating Voltage: 2.4-3.6V (3.3V typ.)
- Temperature Range: -40°C to +85°C Industrial
- Simple, Four-Wire SPI Interface
- Low-Current Consumption:
  - RX mode: 19 mA (typ.), TX mode: 23 mA (typ.), Sleep: 2 µA (typ.)
- Supports Power Save mode

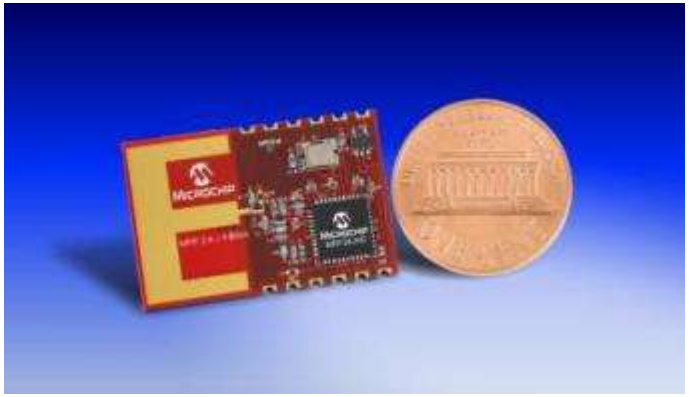

Module Part Numbers:

- MRF24J40MA (pictured) is a 2.4 GHz IEEE Std. 802.15.4™ RF Transceiver Module with PCB Antenna

- MRF24J40MD is a 2.4 GHz IEEE Std. 802.15.4 RF Transceiver Module with PA/LNA, PCB Antenna

- MRF24J40ME is a 2.4 GHz IEEE Std. 802.15.4 RF Transceiver Module with PA/LNA, External Antenna Connector: Ultra Miniature Coaxial (U.FL), 50Ω

<< BACK

MICRF114

Online Datasheet

The MICRF114 is a simple, low-cost OOK transmitter with programmable output power. It is primarily intended for command and control applications (for example, Remote Keyless Entry (RKE) and Garage Door Opener (GDO) systems, etc.). The transmitter is synthesizer based for high-frequency accuracy. It operates on a single frequency which is determined by the frequency of the crystal connected to the built-in reference oscillator. This frequency can be selected from a wide range. The more popular transmit frequencies require readily available crystal frequencies (for example, a 13.56 MHz crystal for a 433.92 MHz transmit frequency). The RF performance of the transmitter is compliant with FCC and IC regulations, and with some Japanese standards. European (ETSI) requirements can be met at low radiated power.

FIGURE 1-1: MICRF114 ARCHITECTURE BLOCK DIAGRAM

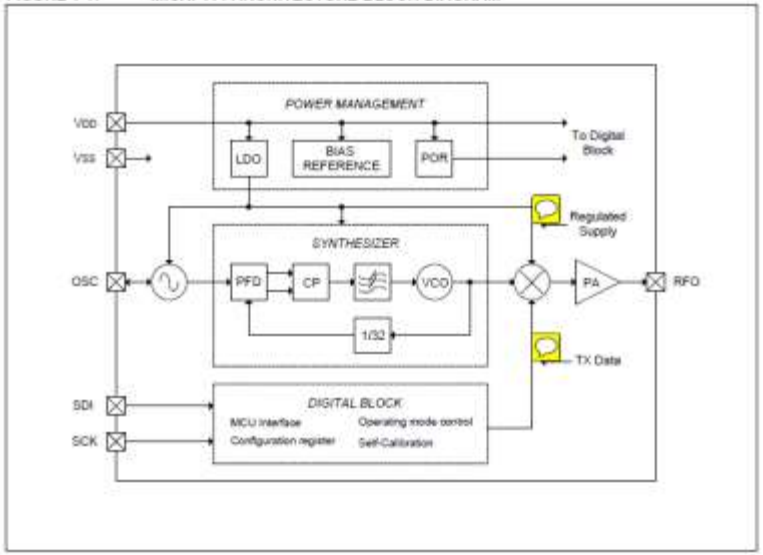

The MICRF114 is optimized for battery-powered applications that feature low current consumption and can operate over a wide supply voltage range. Internal circuits sensitive to supply voltage variations run from the on-chip Low Dropout (LDO) regulator. In order to reduce pin count and system Bill of Materials (BOM), the LDO regulator does not need an external capacitor for stability, and the single-pin reference oscillator has a programmable, integrated crystal load capacitor. The single-ended RF output allows easy matching to monopole antennas with a minimal number of external components.

Key Features:

- Fully Integrated Low-Power Sub-GHz RF Transmitter
- Single-Pin Crystal Oscillator with Integrated, Programmable Load Capacitor
- Wide Operating Voltage Range: 1.8V to 3.6V
- Industrial Temperature Range (-40°C to +85°C)
- Low Current Consumption: 0.2 µA in Sleep Mode, 11.7 mA in +10 dBm Transmit Mode
- Data Rate: up to 115.2 kbps NRZ, 57.6 kbps Manchester Encoded
- On-Off Keying (OOK) Modulation with Power Ramp-up Control
- Small Footprint 6-Pin SOT-23 Package

<< BACK

MICRF113

Online Datasheet

The MICRF113 is a high-performance, easy-to-use, single-chip ASK Transmitter IC for remote wireless applications in the 300MHz to 450MHz frequency band. This transmitter IC is a true "data-in, antenna-out" monolithic device.

MICRF113 has three strong attributes: power delivery, operating voltage and operating temperature. In terms of power, the MICRF113 is capable of delivering +10dBm into a 50Ω load. This power level enables a small form factor transmitter (lossy antenna) such as a key fob transmitter to operate near the maximum limit of transmission regulations. In terms of operating voltage, the MICRF113 operates from 1.8V to 3.6V. Many transmitter ICs in the same frequency band stop operating below 2.0V. The MICRF113 will work with most batteries to the end of their useful limits. In terms of operating temperature, the MICRF113 operates from -40°C to +85°C.

The MICRF113 is easy to use. It requires a reference frequency (RF carrier frequency divided by 32 times) generated from a crystal with a few additional external parts to create a complete versatile transmitter.

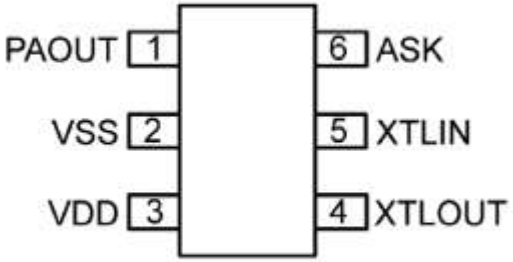

SOT23-6

The MICRF113 operates with Amplitude Shift Keying/On-Off Keyed (ASK/OOK) UHF receiver types from wide-band super-regenerative radios to narrow-band, high-performance super-heterodyne receivers. The MICRF113's maximum ASK bit rate is 20kbps (minimum pulse width of 50µs at ASK pin).

The MICRF113 transmitter solution is ideal for industrial and consumer applications where simplicity and form factor are important.

<< BACK

MICRF112

Online Datasheet

The MICRF112 is a high performance, easy to use, single chip ASK / FSK Transmitter IC for remote wireless applications in the 300 to 450MHz frequency band. This transmitter IC is a true "data-in, antenna-out" monolithic device.

MICRF112 is high performance in three areas: power delivery, operating voltage, and operating temperature. In terms of power, the MICRF112 is capable of delivering +10 dBm into a 50Ω load. This power level enables a small form factor transmitter (lossy antenna) such as a key fob transmitter to operate near the maximum limit of transmission regulations. In terms of operating voltage, the MICRF112 operates from 3.6V to 1.8V. Many transmitter ICs in the same frequency band stop operating below 2.0V. The MICRF112 will work with most batteries to the end of their useful limits. In terms of operating temperature, the MICRF112 operates from -40°C to +125°C. This wide operating temperature range makes MICRF112 an ideal candidate for the demanding applications such as a tire pressure monitoring system.

The MICRF112 is easy to use. One only needs a reference frequency (RF carrier frequency divided by 32 times) generated from a crystal with a few additional external parts to create a complete versatile transmitter.

The MICRF112 operates with ASK/OOK (Amplitude Shift Keying/On-Off Keyed) UHF receiver types from wide-band super-regenerative radios to narrow-band, high performance super-heterodyne receivers. The MICRF112's maximum ASK data rate is 50kbps (Manchester Encoding). It operates with FSK receivers as well. The chip is designed to support narrow band FSK (Frequency Shift Modulation) by switching an external capacitor in parallel with the reference crystal. The MICRF112's maximum FSK data rate is 10kbps.

Pin Configuration

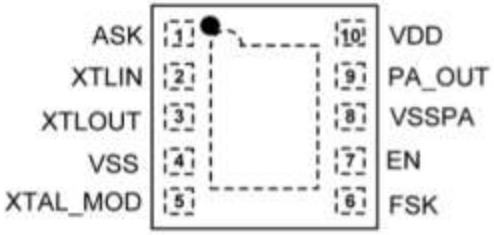

10-Pin Ultra-Thin DFN (MU)
(2mm x 2mm x 0.4mm)
Top View

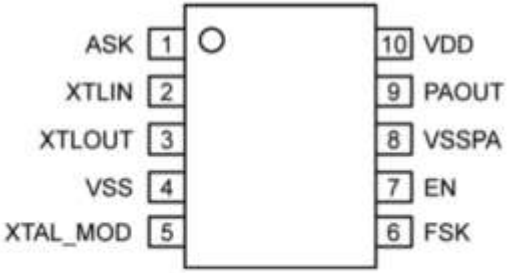

10-Pin MSOP (MM)
Top View

<< BACK

MICRF219A

Online Datasheet

The MICRF219A is a 300MHz to 450MHz super-heterodyne, image-reject, RF receiver with automatic gain control, ASK/OOK demodulator, analog RSSI output, and integrated squelch features. It only requires a crystal and a minimum number of external components to implement. The MICRF219A is ideal for low-cost, low-power, RKE, TPMS, and remote actuation applications.

The MICRF219A achieves -110dBm sensitivity at a bit rate of 1kbps with 0.1% BER. Four demodulator filter bandwidths are selectable in binary steps from 1625Hz to 13kHz at 433.92MHz, allowing the device to support bit rates up to 20kbps.

The device operates from a supply voltage of 3.0V to 3.6V, and typically consumes 4.3mA of supply current at 315MHz and 6.0mA at 433.92MHz. A shutdown mode reduces supply current to 0.1µA typical. The squelch feature decreases the activity on the data output pin until valid bits are detected while maintaining overall receiver sensitivity.

- -110dBm sensitivity at 1kbps with 0.1% BER
- Auto-polling mode with bit checking
- Supports bit rates up to 20kbps at 433.92MHz
- 25dB image-reject mixer
- No IF filter required
- 60dB analog RSSI output range
- 3.0V to 3.6V supply voltage range
- 4.3mA supply current at 315MHz
- 6.0mA supply current at 434MHz
- 13µA supply current in sleep mode
- 0.1µA supply current in shutdown mode
- 16-pin QSOP package (4.9mm x 6.0mm)
- -40°C to +105°C temperature range
- 3kV HBM ESD Rating

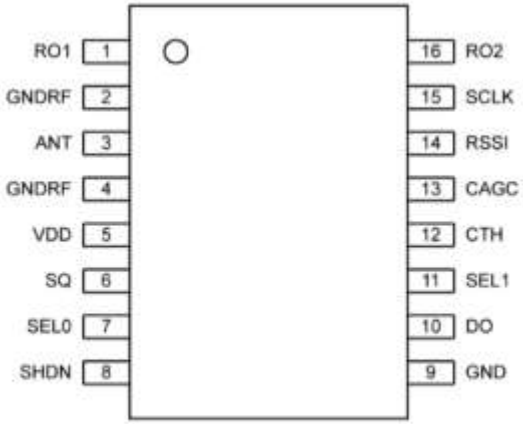

MICRF219AAYQS

<< BACK

MICRF220

Online Datasheet

The MICRF220 is a 300MHz to 450MHz super-heterodyne, image-reject, RF receiver with automatic gain control, ASK/OOK demodulator, analog RSSI output, and integrated squelch features. It only requires a crystal and a minimum number of external components to implement. The MICRF220 is ideal for low-cost, low-power, RKE, TPMS, and remote actuation applications.

The MICRF220 achieves -110dBm sensitivity at a bit rate of 1kbps with 0.1% BER. Four demodulator filter bandwidths are selectable in binary steps from 1625Hz to 13kHz at 433.92MHz, allowing the device to support bit rates up to 20kbps. The device operates from a supply voltage of 3.0V to 3.6V, and typically consumes 4.3mA of supply current at 315MHz and 6.0mA at 433.92MHz. A shutdown mode reduces supply current to 0.1µA typical. The squelch feature decreases the activity on the data output pin until valid bits are detected while maintaining overall receiver sensitivity.

- -110dBm sensitivity at 1kbps with 0.1% BER
- Supports bit rates up to 20kbps at 433.92MHz
- 25dB image-reject mixer
- No IF filter required
- 60dB analog RSSI output range
- 3.0V to 3.6V supply voltage range
- 4.3mA supply current at 315MHz
- 6.0mA supply current at 434MHz
- 0.1µA supply current in shutdown mode
- Data output squelch until valid bits detected
- 16-pin QSOP package (4.9mm x 6.0mm)
- -40°C to +105°C temperature range
- 3kV HBM ESD Rating

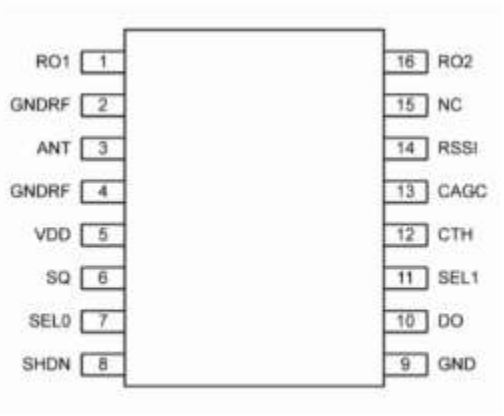

MICRF220AYQS

<< BACK

MRF39RA

Online Datasheet

The MRF39RA is a low power RF receiver capable of operation over a wide frequency range, including the 433, 868 and 915 MHz Sub-GHz frequency bands. It is a highly integrated circuit that minimizes external components while maintaining maximum design flexibility. All major RF communication parameters are programmable and most of them can be dynamically set. The MRF39RA offers the unique advantage of programmable narrow-band and wide- band communication modes without the need to modify external components while satisfying European ETSI and US FCC regulations. The MRF39RA is ideal for battery-powered applications due to its low power consumption, 100 nA in sleep mode (typ) and 16mA receive mode, and operating range from 3.6V down to 1.8V. Additionally, the high sensitivity of -120 dBm enables longer-range applications.

- Covers wide frequency range 290 to 1020 MHz
- FSK, GFSK, MSK, GMSK and OOK demodulation
- Fully integrated synthesizer with a resolution of 61 Hz
- Low current: Rx = 16 mA, 100 nA in sleep mode
- FSK Bit rates up to 300 kbps
- High Sensitivity: down to -120 dBm at 1.2 kbps
- >115 dB Dynamic Range RSSI
- Packet engine with CRC, AES-128 encryption and 66 byte FIFO
- Built-in temperature sensor and Low Battery indicator
- Wide Operating Voltage Range: 1.8 V to 3.6 V
- Small form factor 24 lead 5x5 mm QFN
- Complies with US (FCC) and Canada (IC) Standards

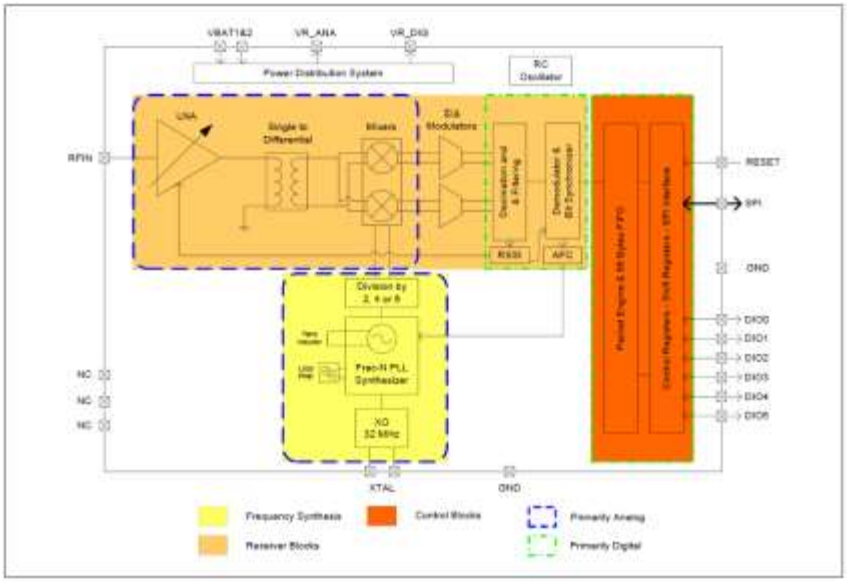

<< BACK

RN2483

Online Datasheet

The RN2483 is a fully-certified LoRa® Sub-GHz, 433/868 MHz module based on wireless LoRa technology. The RN2483 utilizes a unique spread spectrum modulation within the Sub-GHz band to enable long range, low power, and high network capacity.

The module's embedded LoRaWAN™ Class A protocol enables seamless connectivity to the pre-established LoRa network infrastructure. The module is specifically designed for ease of use, which shortens development time, speeding time to market. LoRa technology is ideal for battery-operated sensors and low power applications such as IoT, M2M, Smart City, Sensor networks, Industrial automation, and more.

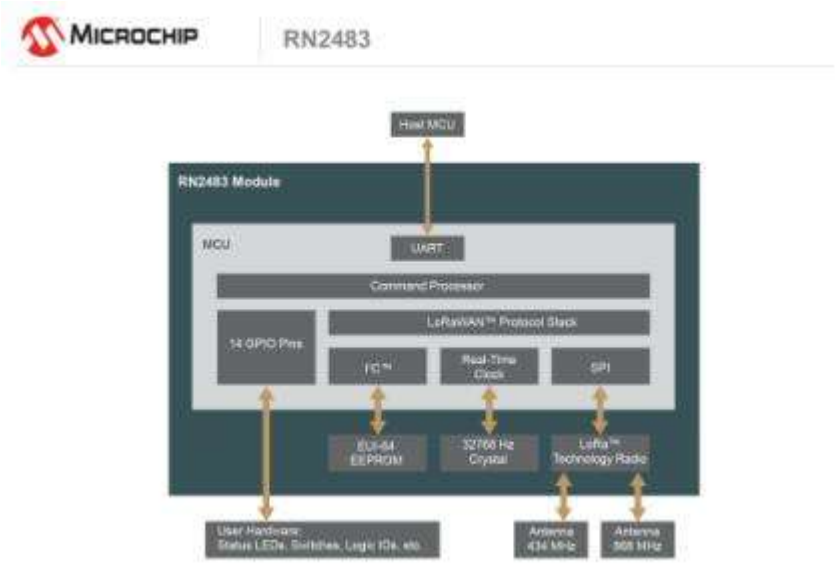

- Low-Power Long Range Transceiver operating in the 433 MHz and 868 MHz frequency bands
- High Receiver Sensitivity: down to -148 dBm
- TX Power: adjustable up to +14 dBm high efficiency PA
- FSK, GFSK, and LoRa Technology modulation
- IIP3 = -11 Db
- >15 km coverage at suburban and >5 km coverage at urban area
- On-board LoRaWAN™ Class A protocol stack
- ASCII command interface over UART
- Compact form factor 17.8 x 26.7 x 3 mm
- Castellated SMT pads for easy and reliable PCB mounting
- Device Firmware Upgrade (DFU) over UART
- 14 GPIO for control, status, and ADC
- Highly integrated module with MCU, crystal, EUI-64 Node Identity Serial EEPROM, Radio transceiver with analog front end, and matching circuitry
- Environmentally friendly, RoHS compliant
- European R&TTE Directive Assessed Radio Module

<< BACK

RN2903

Online Datasheet

The RN2903 is a fully-certified 915 MHz module based on wireless LoRa® technology. The RN2903 utilizes a unique spread spectrum modulation within the Sub-GHz band to enable long range, low power, and high network capacity.

The module's embedded LoRaWAN™ Class A protocol enables seamless connectivity to any LoRaWAN compliant network infrastructure, whether public or privately deployed. The module is specifically designed for ease of use, which shortens development time and speeds time to market. LoRa technology is ideal for battery-operated sensors and low power applications such as IoT, M2M, Smart City, Sensor networks, Industrial automation, and more.

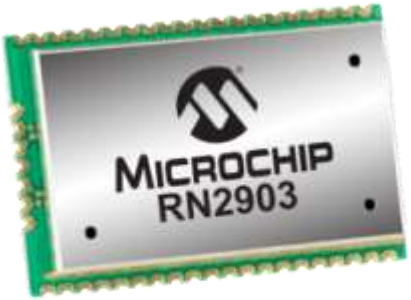

- On-board LoRaWAN™ Class A protocol stack
- ASCII command interface over UART
- Compact form factor 17.8 x 26.7 x 3 mm
- Castellated SMT pads for easy and reliable PCB mounting
- Device Firmware Upgrade (DFU) over UART
- 14 GPIO for control, status, and ADC
- Highly integrated module with MCU, crystal, EUI-64 Node Identity Serial EEPROM, Radio transceiver with analog front end, and matching circuitry
- Environmentally friendly, RoHS compliant
- FCC and IC Certified

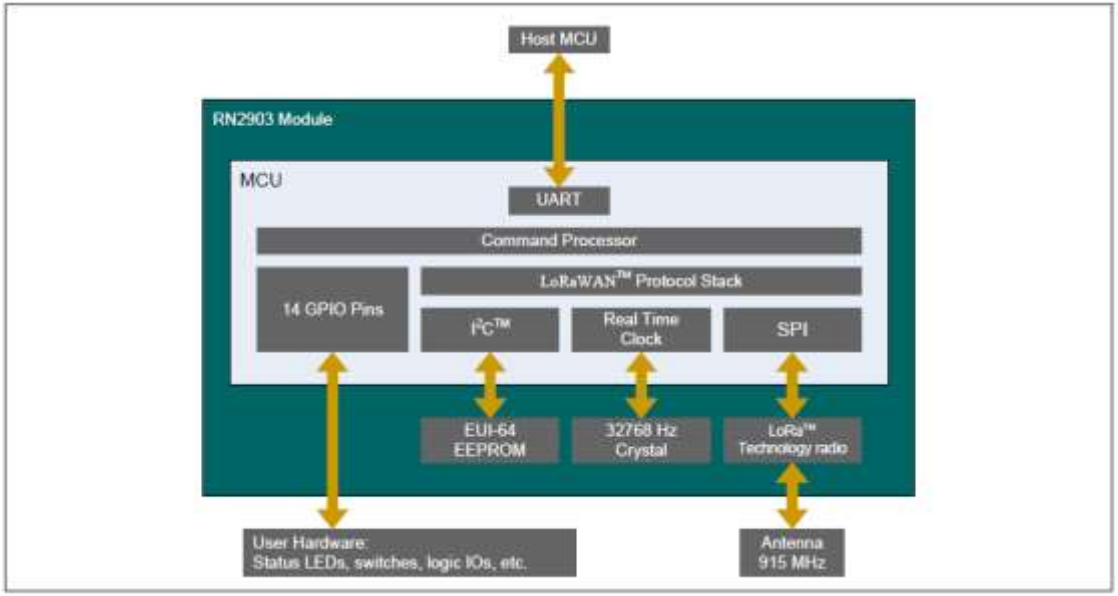

<< BACK

EQCO30T5.2 & EQCO30R5.D HD-CCTV

Online Datasheet

Features:

- 270Mbps to 3Gbps SDI Video Downlink
- Up to 5Mbps Uplink for camera control
- Supports distance up to 470m @ 270Mbps
- Supports distance up to 220m @3Gbps over RG-6 Coax
- Supports up to SMPTE 424M
- Supports 8b/10b coding up to 3.75Gbps
- Support power-over-coax (PoC) cable up to 900mA DC
- Operating Voltage: 3.15V to 3.45V
- Power Consumption: 150mW @ 1.2V
- Packaging: 16-lead 4x4 QFN
- Industrial Temperature Range: -40°C to +85°C

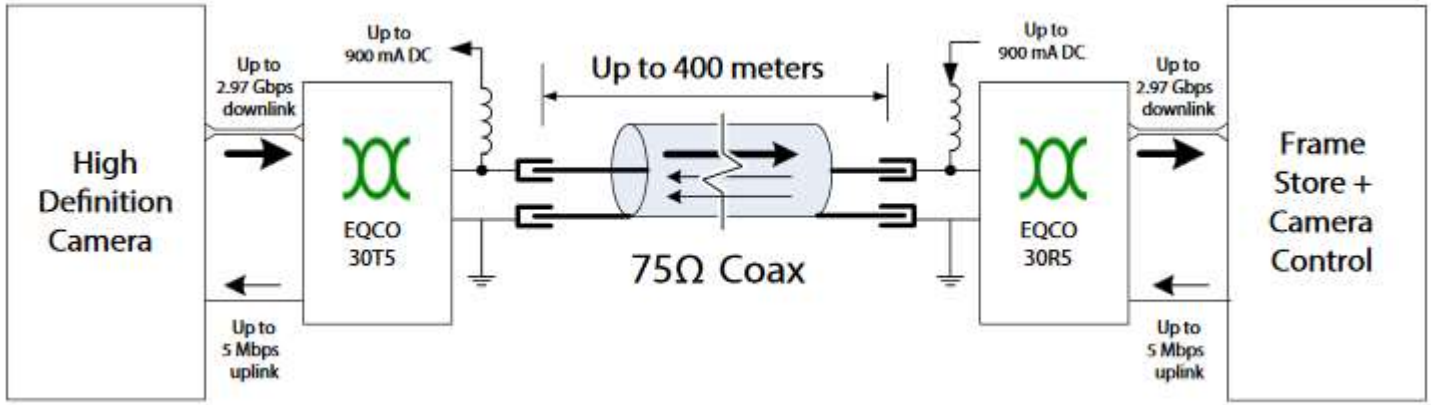

<< BACK

EQCO31T20.3 & EQCO31R20.3

Online Datasheet

Features:

- The EQCO31T/R20 are lower-speed versions of EQCO62T/R20
- 1.25 Gbps to 3.125 Gbps Video Downlink
- Up to 20Mbps Uplink for camera control
- Supports distance up to 380m @ 1.25Gbps
- Supports distance up to 100m @ 3.125Gbps over RG-6 Coax
- Enables nanosecond precise triggering for camera control
- Supports 8b/10b coding up to 3.125Gbps
- Supports power over coax cable up to 900mA DC
- Operating Voltage: 1.15V to 1.25V
- Power Consumption: <70mW @ 1.2V
- Packaging: 16-lead 4x4 QFN
- Industrial Temperature Range: -40°C to +85°C

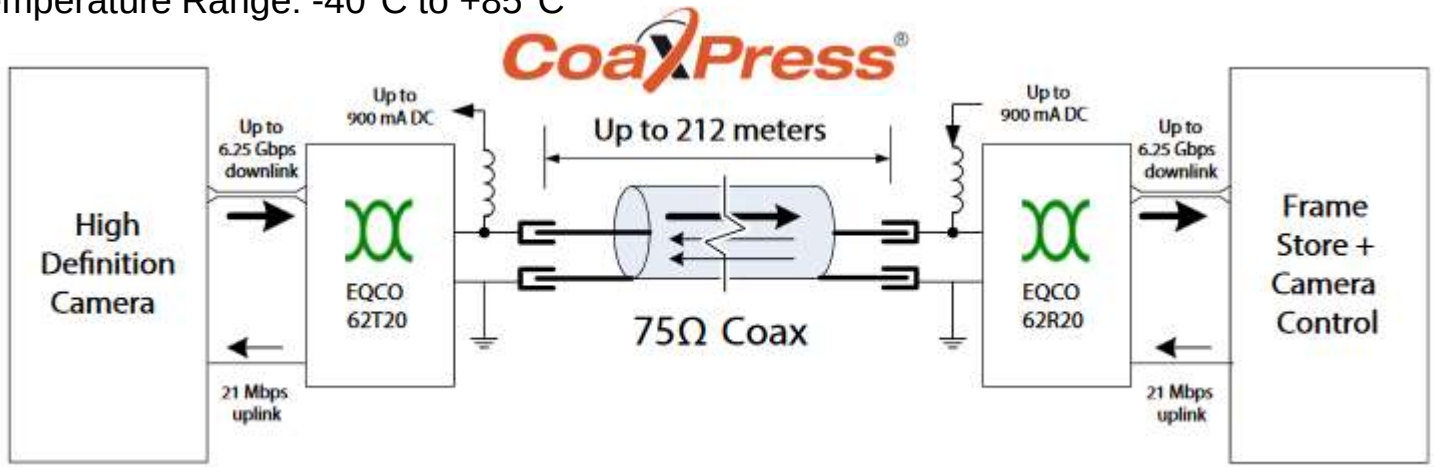

<< BACK

EQCO62T20.3 & EQCO62R20.3

Online Datasheet

Features:

- 1.25 Gbps to 6.25 Gbps Video Downlink
- Up to 20Mbps Uplink for camera control
- Supports distance up to 212m @ 1.25Gbps
- Supports distance up to 68m @ 6.25Gbps over RG-6 Coax
- Enables nanosecond precise triggering for camera control
- Also supports 8b/10b coding up to 6.25Gbps
- Support power over coax cable up to 900mA DC
- Operating Voltage: 1.15V to 1.25V
- Power Consumption: <70mW @ 1.2V
- Packaging: 16-lead 4x4 QFN
- Industrial Temperature Range: -40°C to +85°C

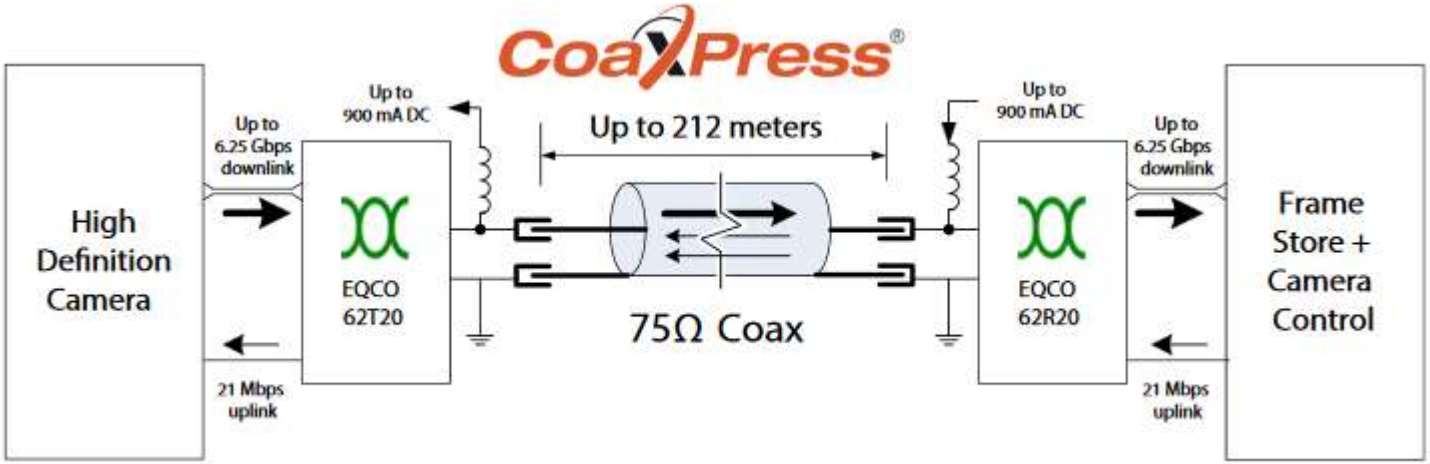

<< BACK

MCP79400/1/2

Online Datasheet

Features:

- Battery Backed Real-Time Clock/Calendar (RTCC):
  - Hours, Minutes, Seconds, Day of Week, Day, Month & Year
  - Dual Alarms
- On-Chip Digital Trimming/Calibration
- Open-Drain Output:
  - Selectable Frequency Clock Output
  - Alarm Output
- Power-Fail Time-Stamp
- Low-Power CMOS Technology:
  - Battery Backup Current: <700nA @ 1.8V
- 400 kHz I^{2}C™
- Packages: 8-Lead SOIC, TSSOP, 2x3 TDFN, MSOP
- Industrial Temperature Range: -40°C to +85°C

Memory:

- 64 Bytes Battery Backed SRAM
- Protected 64-Bit Unique ID memory space:
  - EUI-48™ or EUI-64™ MAC address
  - Custom ID Programming

Device Selection Table:

Part Number	Unique ID
MCP79400	Blank
MCP79401	EUI-48™
MCP79402	EUI-64™

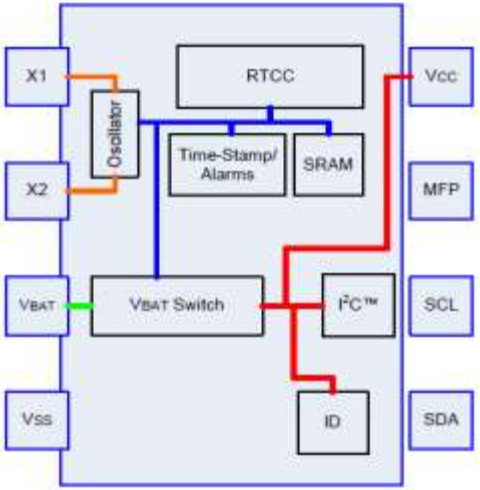

<< BACK

MCP7940M

Online Datasheet

Features:

- Real-Time Clock/Calendar (RTCC):
  - Hours, Minutes, Seconds, Day of Week, Day, Month & Year
  - Dual Alarms
- On-Chip Digital Trimming/Calibration
- Open-Drain Output:
  - Selectable Frequency Clock Output
  - Alarm Output
- 400 kHz I^2C™
- Packages: 8-Lead SOIC, TSSOP, 2x3 TDFN, MSOP, PDIP
- Industrial Temperature Range:
  - -40°C to +85°C (Industrial)

Memory:

- 64 Bytes SRAM

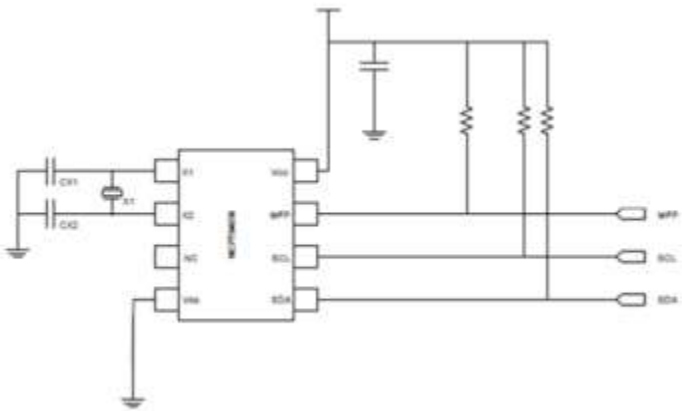

<< BACK

MCP7940N

Online Datasheet

Features:

- Battery Backed Real-Time Clock/Calendar (RTCC):
  - Hours, Minutes, Seconds, Day of Week, Day, Month &Year
  - Dual alarms
- On-Chip Digital Trimming/Calibration
- Open-Drain Output:
  - Selectable Frequency Clock Output
  - Alarm Output
- Power-Fail Time-Stamp
- Low-Power CMOS Technology:
  - Battery Backup Current: <700nA @ 1.8V
- 400 kHz I²C™
- Packages: 8-Lead SOIC, TSSOP, 2x3 TDFN, MSOP, PDIP
- Temperature Ranges:
  - -40°C to +85°C (Industrial)
  - -40°C to +125°C (Extended)

Memory:

- 64 Bytes Battery Backed SRAM

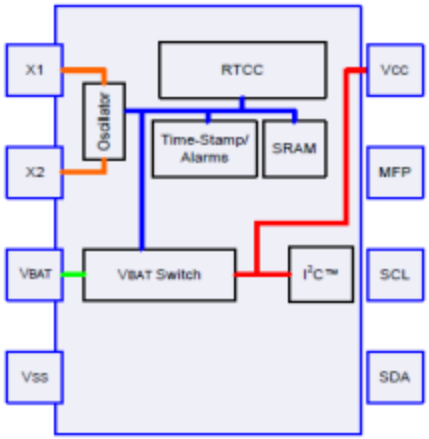

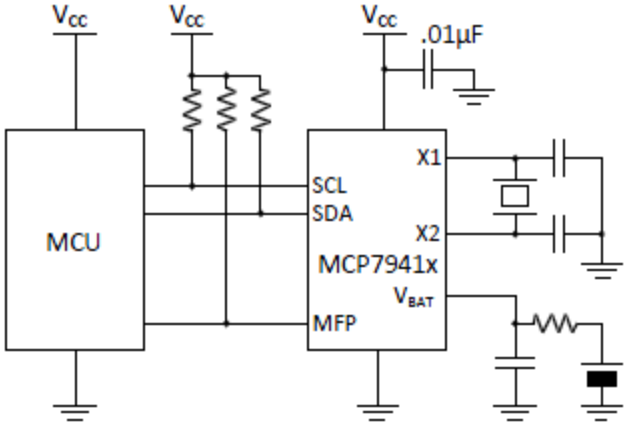

<< BACK

MCP79410/11/12

Online Datasheet

Features:

- Battery Backed Real-Time Clock/Calendar (RTCC):
  - Hours, Minutes, Seconds, Day of Week, Day, Month & Year
  - Dual alarms
- On-Chip Digital Trimming/Calibration:
- Open-Drain Output:
  - Selectable Frequency Clock Output
  - Alarm Output
- Power-Fail Time-Stamp
- Low-Power CMOS Technology:
  - Battery Backup Current: <700nA @ 1.8V
- 400 kHz I^2C™
- Packages: 8-Lead SOIC, TSSOP, 2x3 TDFN, MSOP
- Industrial Temperature Range:
  - -40°C to +85°C (Industrial)

Memory:

- 64 Bytes Battery Backed SRAM
- 1 Kbits EEPROM (128x8)
- Protected 64-Bit Unique ID memory space:
  - EUI-48™ or EUI-64™ MAC address
  - Custom ID programming

Device Selection Table:

Part Number	Unique ID
MCP79410	Blank
MCP79411	EUI-48™
MCP79412	EUI-64™

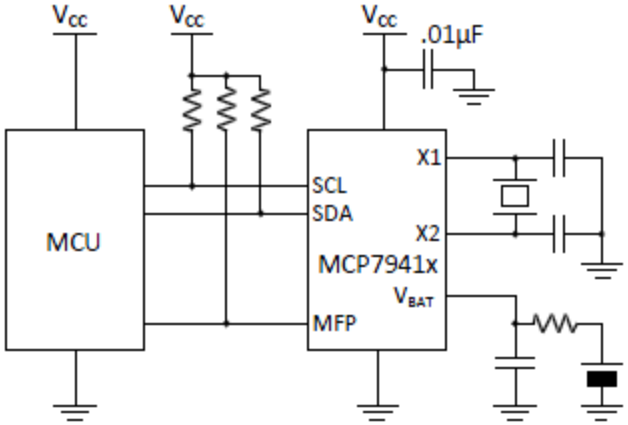

<< BACK

MCP79510/11/12 and MCP79520/21/22

Online Datasheet

Features:

- Battery Backed Real-Time Clock/Calendar:
  - Hours, Minutes, Seconds, Hundredth of Seconds, Day of Week, Month, Year & Leap Year
  - Dual Alarms
- Open-Drain Output:
  - Selectable Frequency Clock Output
  - Alarm Output
- On-Chip Digital Trimming/Calibration
- Power-Fail Time-Stamp
- 1.8V to 3.6V Operating Voltage
- Low Operating Current:
  - VBAT Timekeeping Current: <700nA @ 1.8V
- 5 MHz SPI
- 10-lead MSOP & TDFN
- Industrial Temperature Range:
  - -40°C to +85°C

Memory:

- 64-Byte Battery-Backed SRAM
- 2 Kbit and 1 Kbit EEPROM Memory
- Protected 128-Bit Unique ID memory space:
  - EUI-48™ or EUI-64™ MAC address
  - Custom ID programming

Device Selection Table:

Part Number	EEPROM (Kbits)	Unique ID
MCP79510	1	Blank
MCP79520	2	Blank
MCP79511	1	EUI-48™
MCP79521	2	EUI-48™
MCP79512	1	EUI-64™
MCP79522	2	EUI-64™

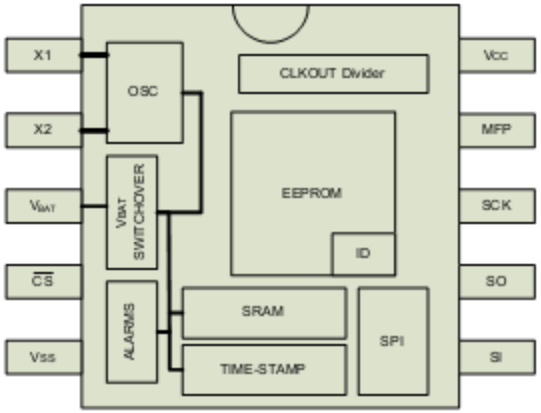

<< BACK

MCP795W10/11/12 and MCP795W20/21/22

Online Datasheet

Features:

- Battery Backed Real-Time Clock/Calendar:
  - Hours, Minutes, Seconds, Hundredth of Seconds, Day of Week, Month, Year & Leap Year
  - Dual Alarms
- Open-Drain Output:
  - Selectable Frequency Clock Output
  - Alarm Output
- On-Chip Digital Trimming/Calibration
- Power-Fail Time-Stamp
- 1.8V to 3.6V Operating Voltage
- Low Operating Current:
  - VBAT Timekeeping Current: <700nA @ 1.8V
- 10 MHz SPI
- 14-Lead SOIC & TSSOP
- Industrial Temperature Range:
  - -40°C to +85°C

Enhanced Features:

- Programmable Watchdog Timer with dedicated output pin
- High-Speed Digital Event Detect (EVHS) with transition count
- Debounced Low-Speed Event Detect (EVLS)

Device Selection Table:

Part Number	EEPROM (Kbits)	Unique ID
MCP795W10	1	Blank
MCP795W20	2	Blank
MCP795W11	1	EUI-48™
MCP795W21	2	EUI-48™
MCP795W12	1	EUI-64™
MCP795W22	2	EUI-64™

Memory:

- 64-Byte Battery-Backed SRAM
- 2 Kbit and 1 Kbit EEPROM Memory
- Protected 128-Bit Unique ID memory space:
  - EUI-48™ or EUI-64™ MAC address
  - Custom ID programming

MCP7951X/2X

<< BACK

MD0100DB1 Demo Board

Online Info

The MD0100DB1 demo board contains four MD0100DK6-G dual packages providing 8 T/R switches in the system. There are no other external components on the board. This demo board replaces 8 discrete diode bridge protection circuits. The input of the MD0100DB1 is called TX which is connected to the output of the transmitter, and the output is called RX which is connected to the input of the receiver. The TX and RX are interchangeable. The MD0100DB is especially laid out so that all the inputs are on one side and all the outputs are on other side of the board. It provides for easy replacement on the system for testing.

Products supported

- MD0100

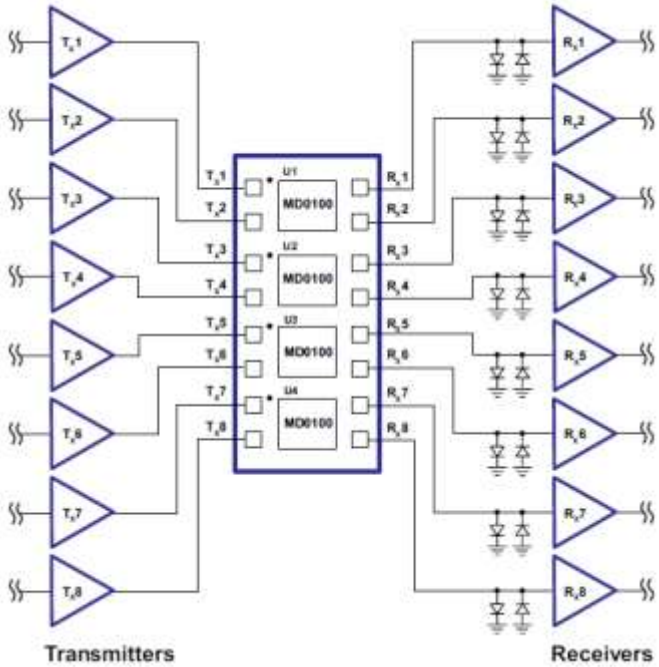

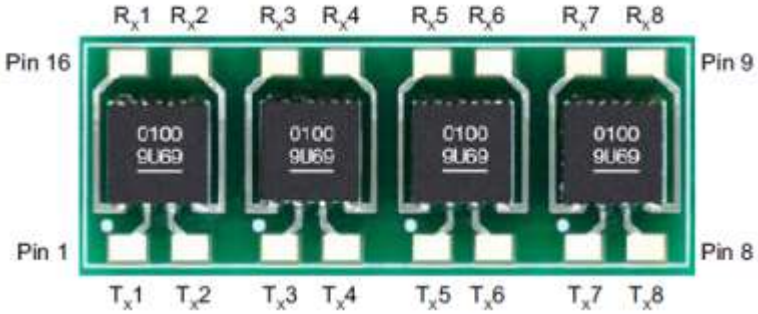

<< BACK

P/N: MD0100DB1

MD0101DB1 Demo Board

Online Info

The MD0101DB1 demoboard contains two MD0101 packages providing eight T/R switches in the system. This demoboard replaces eight discrete diode bridge protection circuits. The input of the MD0101DB1 is called TX, which is connected to the output of the transmitter, and the output is called RX, which is connected to the input of the receiver. The clamping diodes are integrated between the RX and RGND. There is a 0Ω resistor connected between the RGND and the ground plane of the board. If external diodes are desired, the 0Ω resistor has to be removed and the external diodes can then be connected between the RX and RGND. The MD0101DB1 is especially layed out so that all inputs are on one side and all outputs are on the other side of the board. This provides easy access and replacement on the system for testing.

Products supported

- MD0101

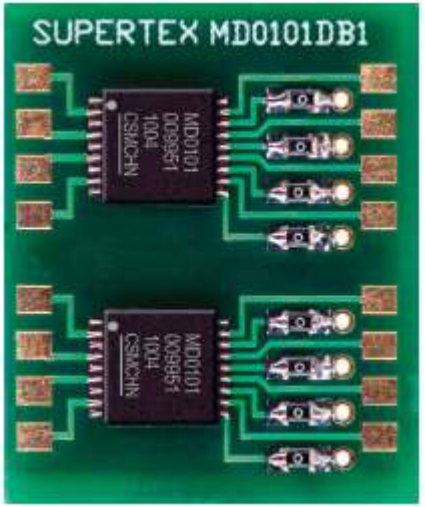

<< BACK

P/N: MD0101DB1

MCP37X3X-200
16-bit ADC Evaluation Board

Online Info

The MCP37X3X-200 16-bit VTLA ADC Evaluation Board (ADM00505) provides the opportunity to evaluate the performance of the MCP37X3X-200 16-bit device families. With the MCP37D31-200, 200Msps pipelined A/D converter on-board, the user can evaluate the functionality of the 200Msps A/D converters and the digital signal processing features. With the help of a compatible data capture card, the evaluation board can provide the user with performance analysis features through the PC GUI.

For proper operation, this evaluation board must be used with a compatible data capture card (ADM00506).

Products supported

- MCP37D31-200
- MCP3421
- MCP1727

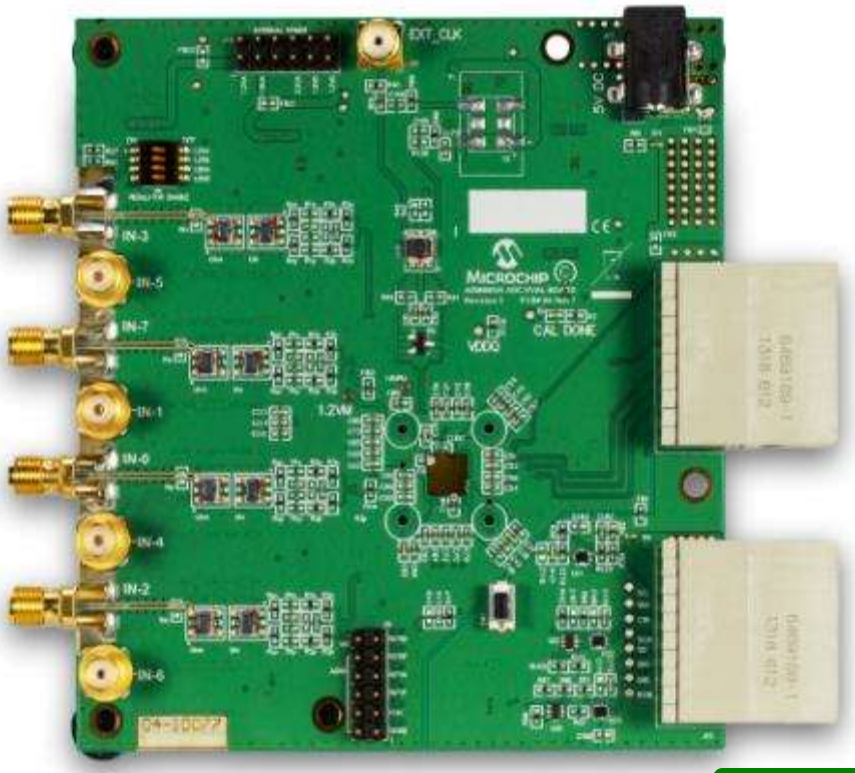

<< BACK

P/N: ADM00505

MCP37X1X-200
12-bit ADC Evaluation Board

Online Info

The MCP37X1X-200 12-bit VTLA ADC Evaluation Board (ADM00619) provides the opportunity to evaluate the performance of the MCP37X1X-200 12-bit device families. With the MCP37D11-200, 200Msps pipelined A/D converter on-board, the user can evaluate the functionality of the 200Msps A/D converters and the digital signal processing features. With the help of a compatible data capture card, the evaluation board can provide the user with performance analysis features through the PC GUI.

For proper operation, this evaluation board must be used with a compatible data capture card (ADM00506).

Products supported

- MCP37D11-200
- MCP3421
- MCP1727

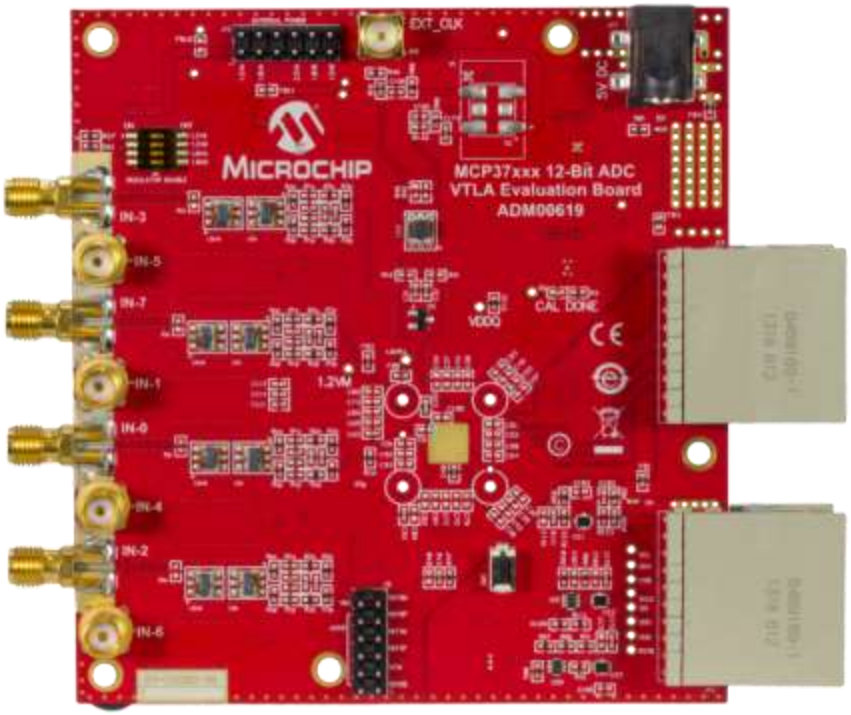

<< BACK

P/N: ADM00619

MCP37XXX-200
14-bit ADC Evaluation Board

Online Info

The MCP37XX0-200, 14-bit 200 Msps ADC VTLA Evaluation Board (ADM00652) provides the opportunity to evaluate the performance of the MCP37XX0-200 Device Family. With the MCP37D20-200, 14-bit 200 Msps single channel pipelined A/D converter on-board, the user can evaluate the functionality of the 14-bit (or 12-bit) 200 Msps A/D converters and the digital signal processing features. With the help of a compatible data capture card, the evaluation board can provide the user with performance analysis features through the PC GUI.

For proper operation, this evaluation board must be used with a compatible data capture card (ADM00506).

Products supported

- MCP37XX0-200
- MCP3421
- MCP1727

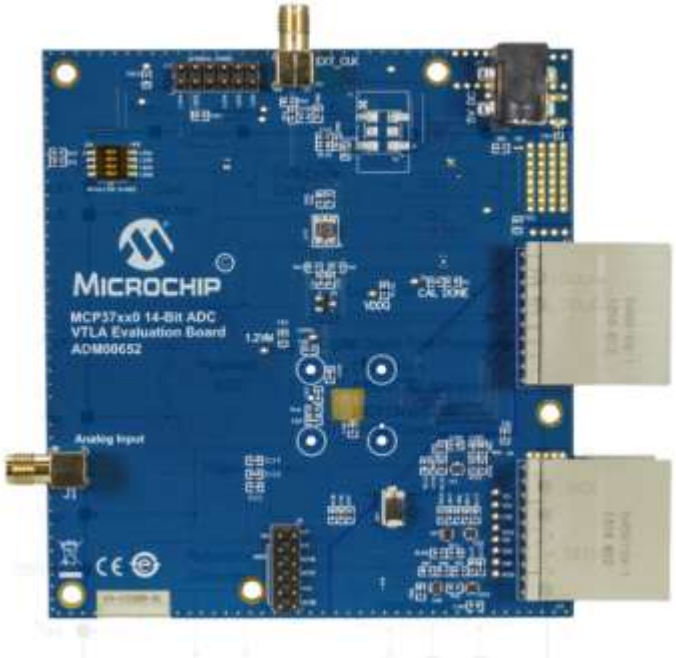

<< BACK

P/N: ADM00652

MCP37XXX
Data Capture Card

Online Info

The MCP37xxx Data Capture Card (ADM00506) is an FPGA-based memory buffer for the digital data received from the Analog to Digital Converter (ADC) on board the MCP37xxx Evaluation Boards. The data capture card connects to a PC via a USB cable, providing the user with two functionalities:

- The ability to send user commands directly to the MCP37xxx device using the PC GUI.
- The ability to collect data from the Evaluation Board and send it to the PC GUI.

For proper operation, this data capture card must be used with a compatible evaluation board.

Products supported

- MCP37XXX

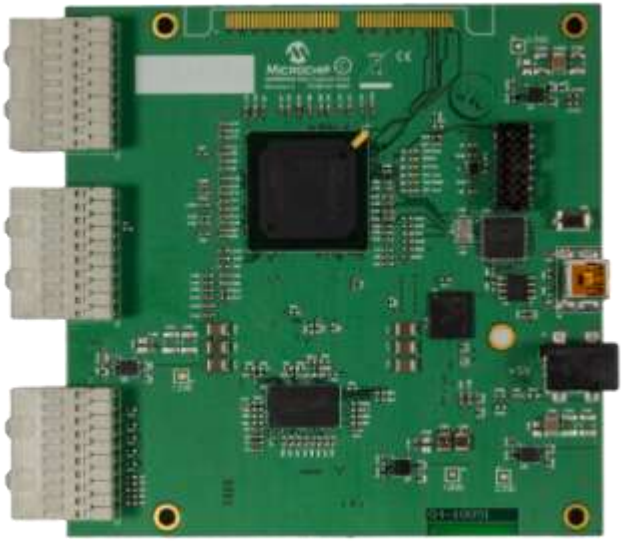

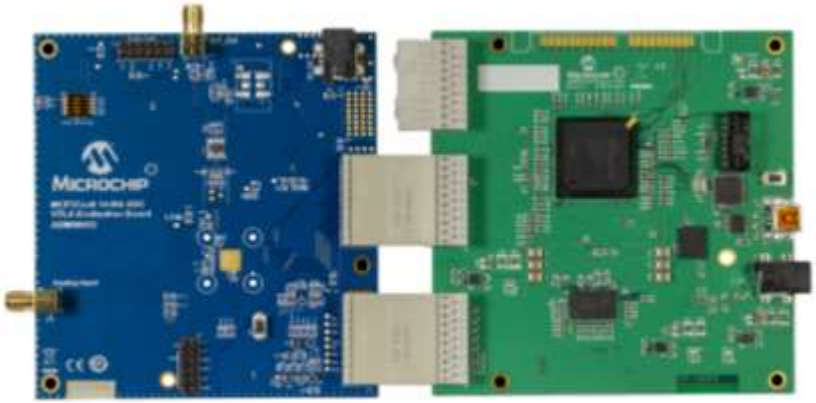

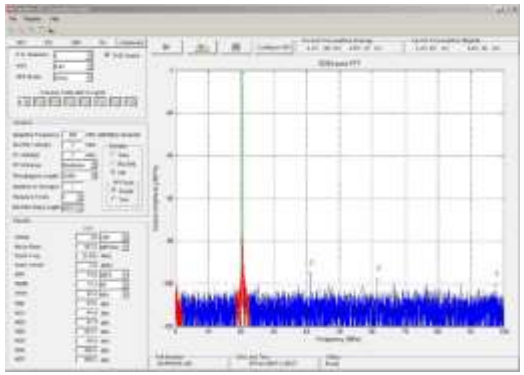

<< BACK

P/N: ADM00506

SR086DB1 Demo Board

Online Info

The SR086DB1 demoboard is an inductorless switching power supply intended for operation directly from a 120/230VAC line. Two outputs, 12.6V and 3.3V are provided. The operating principle is to turn on a pass transistor when the rectified AC input is below the output voltage, and to turn it off when the output storage capacitor is charged up to the regulation point. Since the output capacitor charges up on the rising edge of a sine wave, reasonable efficiencies can be obtained without the use of magnetics.

Products supported

- SR086

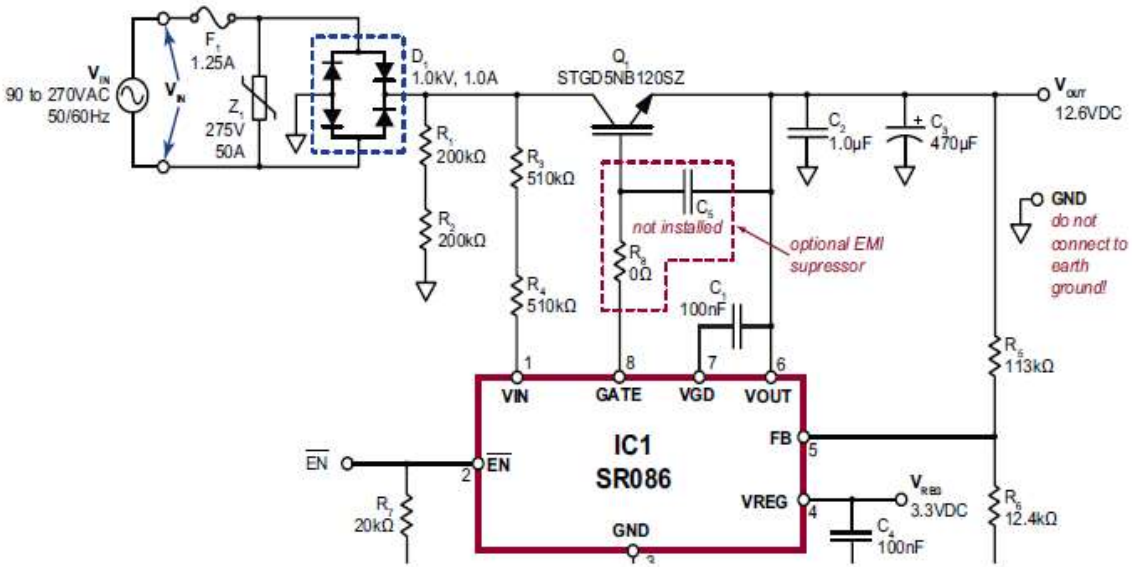

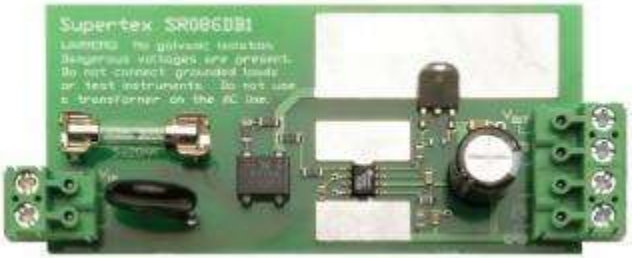

<< BACK

P/N: SR086DB1

SR087DB1 Demo Board

Online Info

The SR087DB1 demoboard is an inductorless switching power supply intended for operation directly from a 120/230VAC line. Two outputs, 12.6V and 5.0V are provided. The operating principle is to turn on a pass transistor when the rectified AC input is below the output voltage, and to turn it off when the output storage capacitor is charged up to the regulation point. Since the output capacitor charges up on the rising edge of a sine wave, reasonable efficiencies can be obtained without the use of magnetics.

Products supported

- SR087

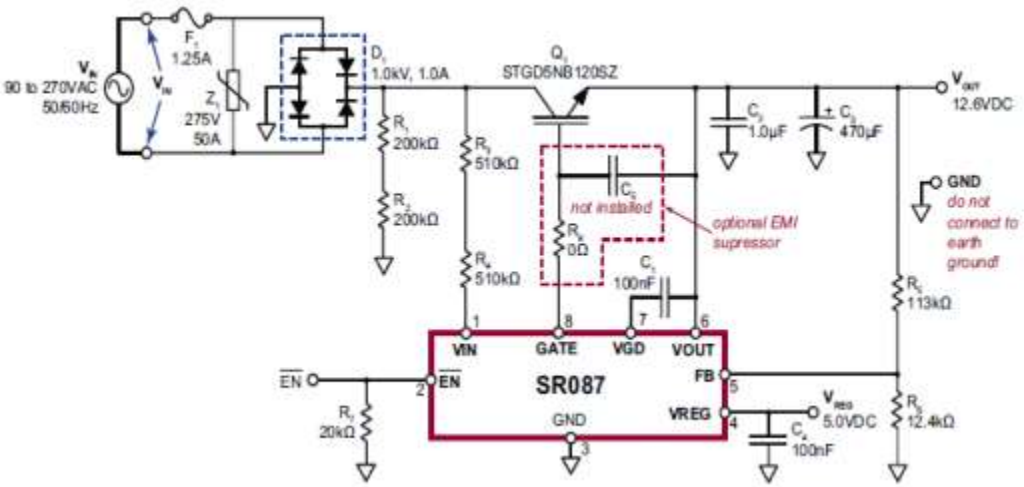

<< BACK

P/N: SR087DB1

SR10DB1 Demo Board

Online Info

The SR10 is an inductorless switching power supply controller intended for operation directly from a rectified 120/240VAC line. Due to the capacitor-coupled, switched shunt topology (CCSS), it exhibits low standby power and good efficiency while employing no magnetics nor high voltage electrolytic capacitors. To meet a wide variety of applications, the SR10DB1 is highly configurable. Many components are socketed. Half or full-wave rectification is jumper-selectable. Output voltage is jumper-selectable to 3 fixed voltages or may be set anywhere in the range of 6 - 28V using an on-board feedback divider.

Products supported

- SR10

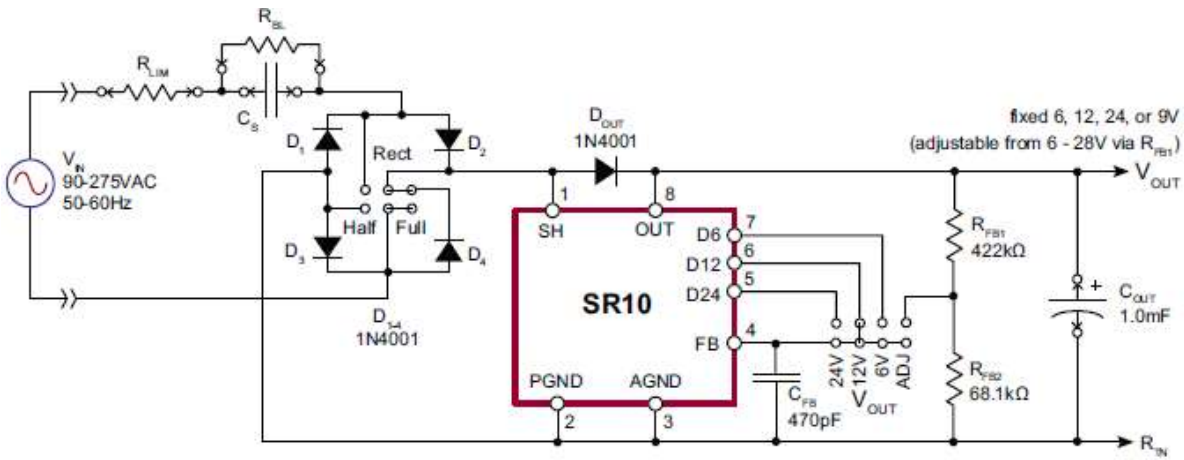

<< BACK

P/N: SR10DB1

MD1213DB1 Demo Board

Online Info

The MD1213DB1 can drive a transducer as a single channel transmitter for ultrasound and other applications. The demoboard consists of one MD1213 combined with TC6320. Logic control inputs INA, INB and OE of the MD1213 are controlled via the six-pin head connector on the board. Due to the fast signal rise and fall time requirement, every ground wire of the ribbon cable must be used to connect from the logic signal source. When OE is enabled, it should receive the same voltage as the logic source circuit's power supply.

Products supported

- MD1213K6-G

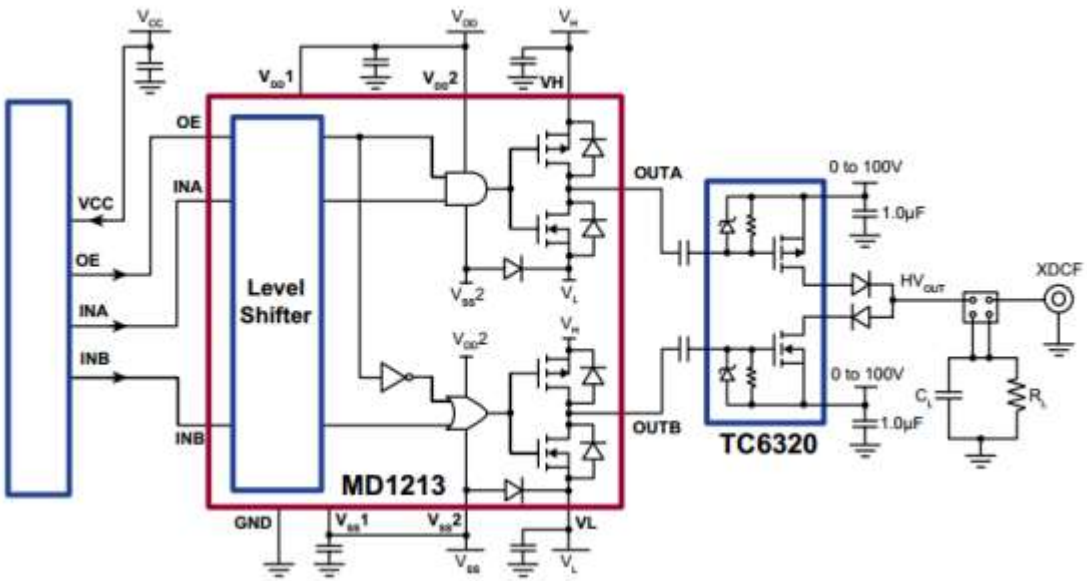

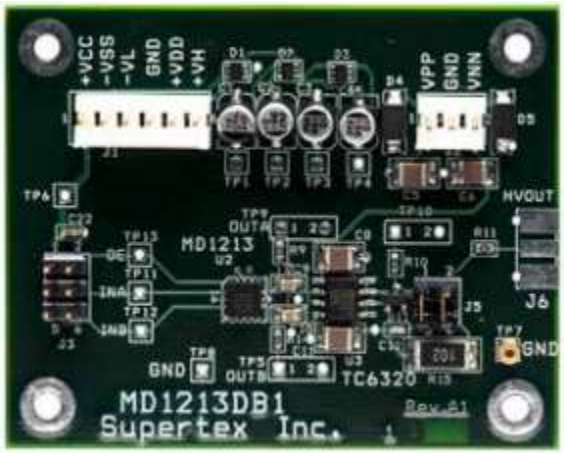

<< BACK

P/N: MD1213DB1

MD1822DB1 Demo Board

Online Info

The MD1822DB1 is a demoboard for the three level ±100V 2.5A pulser chip-set of the MD1822 MOSFET driver and the TC7920 MOSFET. The demoboard consists of one MD1822 in the 3x3 QFN-16 package driving the TC7920 which has two pairs of high speed and high voltage complementary P- and N-Channel MOSFETs in one 4x4 DFN-8 package. This circuit is an ideal, cost-optimized, high voltage and high current RTZ ultrasound transmit pulser.

Products supported

- MD1822
- TC7920

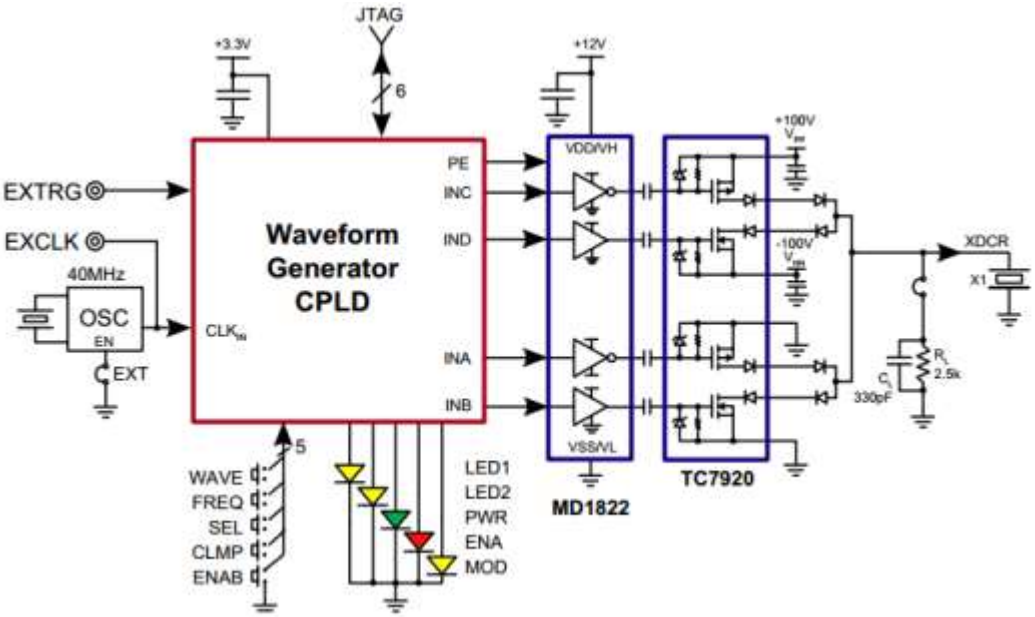

<< BACK

P/N: MD1822DB1

MD1822DB2 Demo Board

Online Info

The MD1822DB2 is a demoboard for the three level ±100V 2.5A pulser chip-set of the MD1822 MOSFET driver and the TC6320 MOSFET. The demoboard consists of one MD1822 in a 3x3mm, 16-lead QFN package driving the TC6320, which has one pair of high speed and high voltage complementary P- and N-Channel MOSFETs in one 4x4mm, 8-lead DFN package. This circuit is an ideal, cost-optimized, high voltage and high current RTZ ultrasound transmit pulser.

Products supported

- MD1822
- TC6320

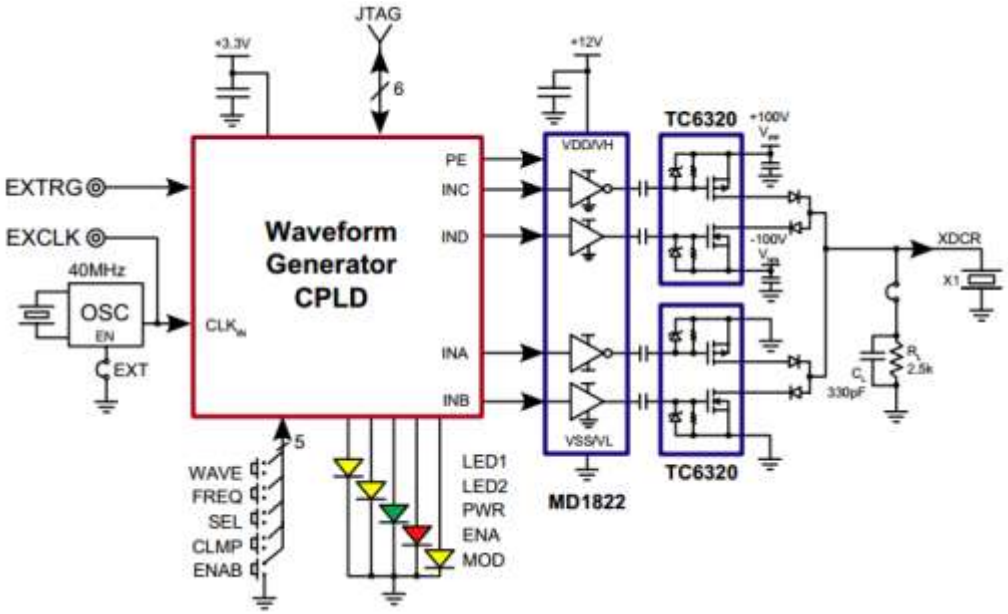

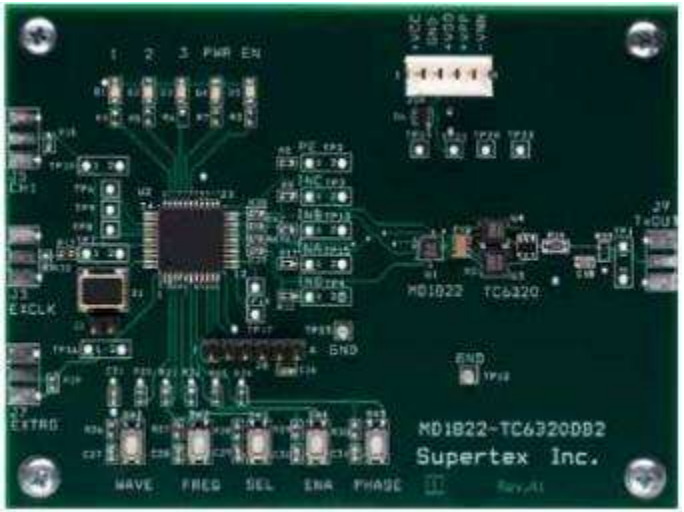

<< BACK

P/N: MD1822DB2

MD1822DB3 Demo Board

Online Info

The MD1822DB3 is a demoboard for the three level ±100V 2.5A pulser chip-set of the MD1822 MOSFET driver and the TC8220 MOSFET. The demoboard consists of one MD1822 in the 3x3mm 16-lead QFN package driving the TC8220 which has two pairs of high speed and high voltage complementary P- and N-MOSFETs in in one 4x4mm, 8-lead DFN package. This circuit is an ideal, cost-optimized, high voltage and high current RTZ ultrasound transmit pulser.

Products supported

- MD1822
- TC8220

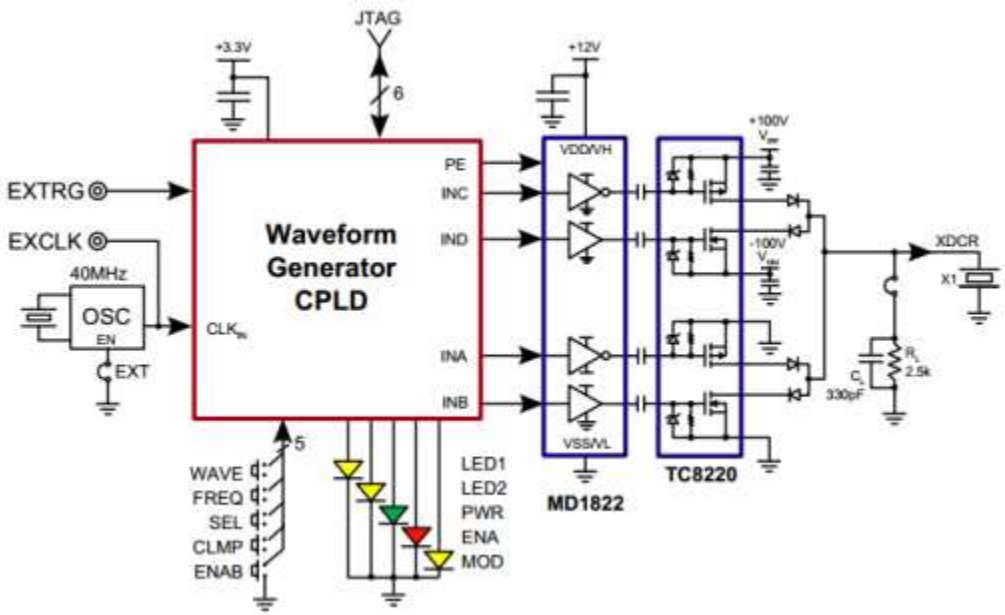

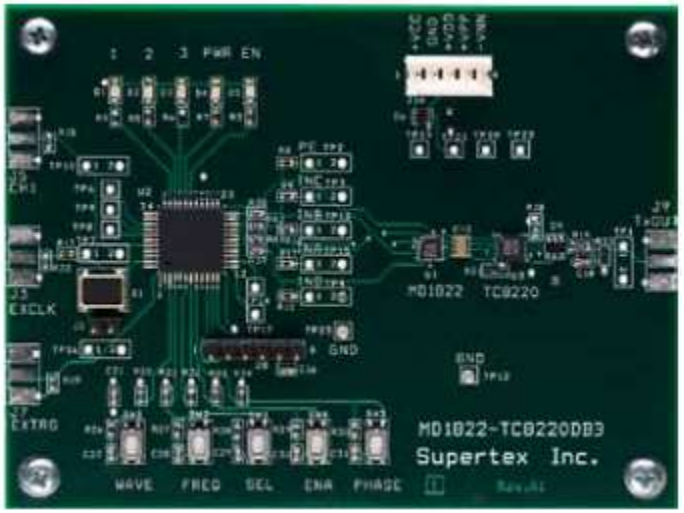

<< BACK

P/N: MD1822DB3

MD1711DB2 Demo Board

Online Info

The MD1711DB2 demoboard is as a five-level, dual-channel, +/-100V, 2.0A, return-to-zero pulser. It can directly drive two 50 or 75Ω impedance transducers for 1.0MHz to 20MHz medical ultrasound imaging or NDT applications.

The MD1711DB2 consists of one MD1711 in a 48-Lead LQFP package driving six TC6320 complementary high voltage MOSFET pairs in 8-Lead SOIC packages. The external logic signal connector, J13, connects all the input control signals of the MD1711 to the user's logic control source via a short ribbon cable. In typical two-, three- or five-level bipolar pulsing, PW or CW waveforms can be generated by the proper input control signal listed below. Jumpers are provided for the output, such that it can drive either the on-board RC load 220pF capacitor in parallel with a 1.0KΩ resistor or with an external load of cable to the user's ultrasound testing transducer.

Products supported

- MD1711
- TC6320

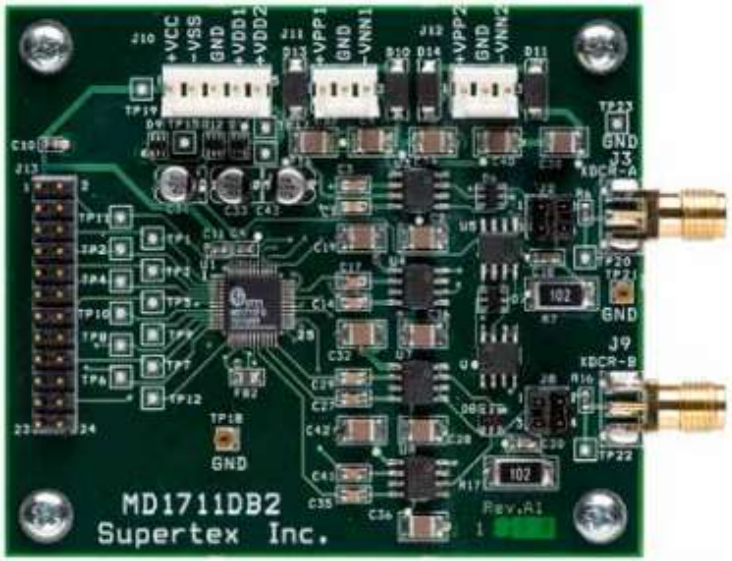

<< BACK

P/N: MD1711DB2

MD1715DB2 Demo Board

Online Info

The MD1715DB2 demoboard can drive two transducers as a five-level, two channel transmitter for ultrasound and other applications.

The demoboard consists of one MD1715 in a 6x6mm 40-lead QFN package driving 12 high voltage FETs in six TC8020s in one 8x8mm 56-lead QFN package. The CPLD programmable logic circuit 40MHz crystal oscillator generates accurate timing high-speed waveforms on a separate CPL board. There are multiple frequencie and waveform combinations that can be selected as bipolar pulse waveforms. External clock input can be used if the on board oscillator is disabled. The external trigger input can be used to synchronize the output waveforms. There are five push buttons for selecting the demo waveform, frequency, phase, mode selection functions. Color LEDs indicate the demo selection states. Jumpers on board for select the SMA connector to the external loads or the 220pF//1k on board dummy load.

Products supported

- MD1715
- TC8020

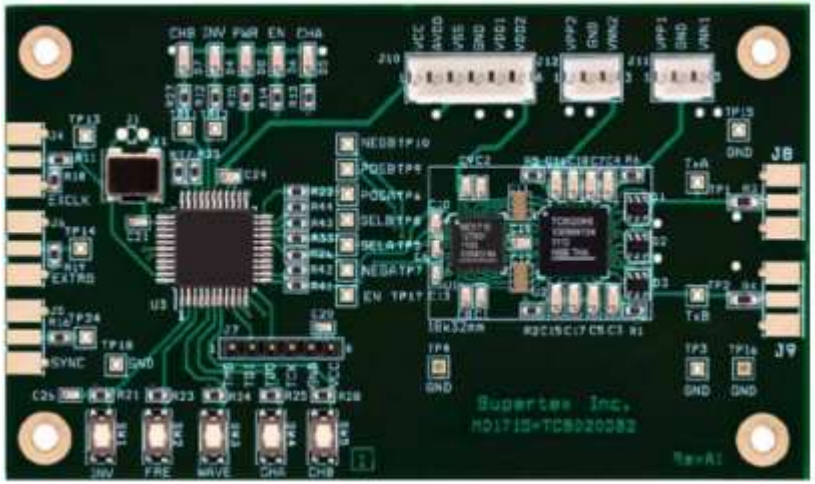

<< BACK

P/N: MD1715DB2

MD2131DB1 Demo Board

Online Info

The MD2131DB1 demoboard is to used to generate the ultrasound transmit beamforming waveform with the Gaussian profile, and the adjustable frequency, amplitude and phase angle. The MD2131DB1 circuit uses two depletion-mode MOSFETs in the push-pull mode to drive the center tapped, wide band, ultrasound output transformer. The sources of the MOSFETs are directly driven by the MD2131's two outputs, whose maximum peak sinking current is up to 3.0A. These current source outputs are controlled by the MD2131's internal angular vector switch matrix and the in-phase and quadrature PWM input signals.

Products supported

- MD2131

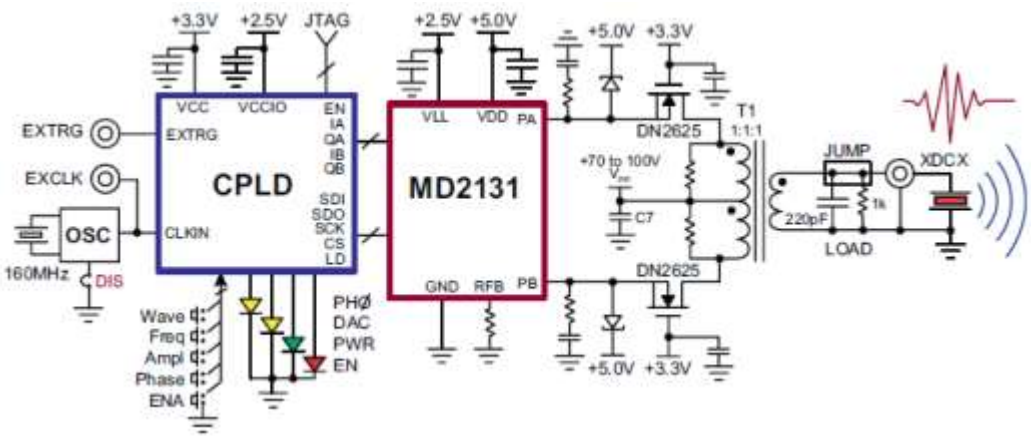

<< BACK

P/N: MD2131DB1

MD2131DB2 Demo Board

Online Info

The MD2131DB2 demoboard is to used to generate the ultrasound transmit beamforming waveform with the Gaussian profile, and the adjustable frequency, amplitude and phase angle. It also provides information about how to design a user application circuit and PCB using the Supertex MD2131 and DN2625 devices. The MD2131DB2 circuit uses two depletion-mode MOSFETs in the push-pull mode to drive the center tapped, coupled, RF power inductor. The sources of the MOSFETs are directly driven by the MD2131's two outputs, whose maximum peak sinking current is up to 3.0A. These current source outputs are controlled by the MD2131's internal angular vector switch matrix and the in-phase and quadrature PWM input signals.

Products supported

- MD2131

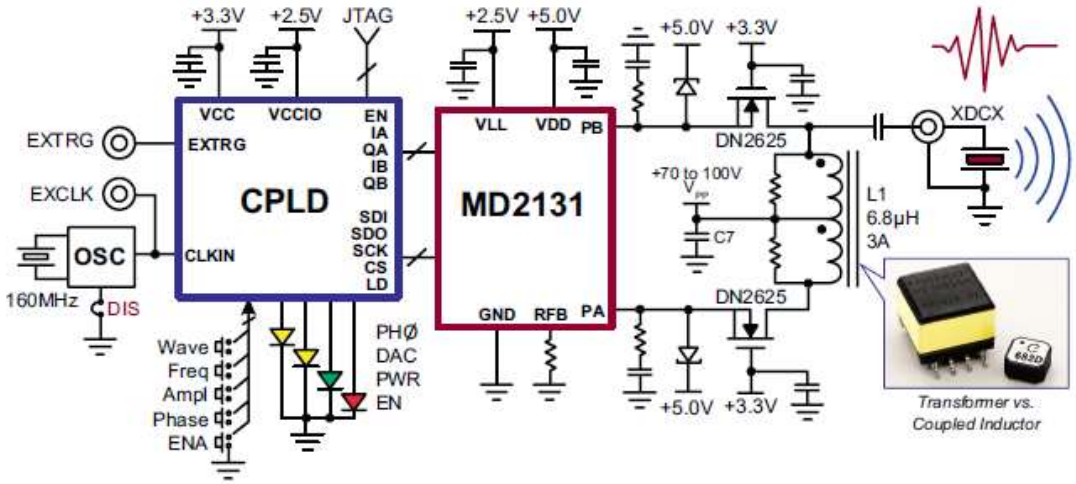

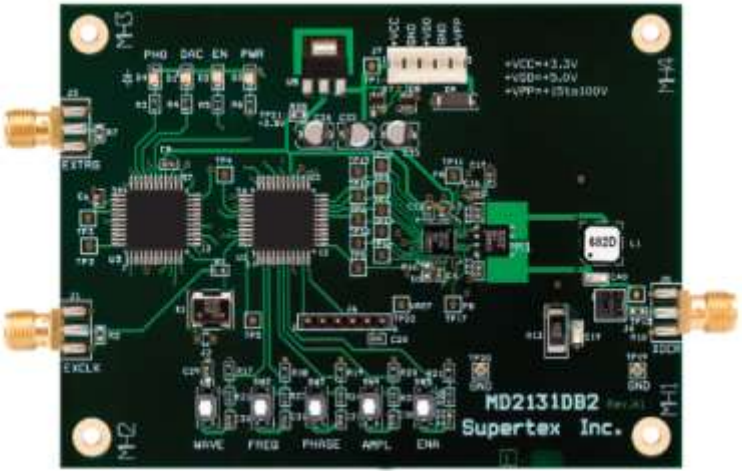

<< BACK

P/N: MD2131DB2

MD2134DB1 Demo Board

Online Info

The MD2134DB1 demoboard is used to generate the ultrasound transmit beam forming waveform with the Gaussian profile, and the adjustable frequency, amplitude and phase angle. The MD2134DB1 circuit uses a pair of depletion mode, high voltage, DN2625 MOSFETs in the push-pull mode to drive the center-tap wide band ultrasound output transformer. The MOSFETs are in one 8-Lead DFN surface mount package. The sources of the MOSFETs are directly driven by the MD2134's two outputs, whose maximum peak sinking current is up to 3.3A. These current-source outputs are controlled by the MD1234's internal current source switch array and the input signals M[3:0].

Products supported

- MD2134

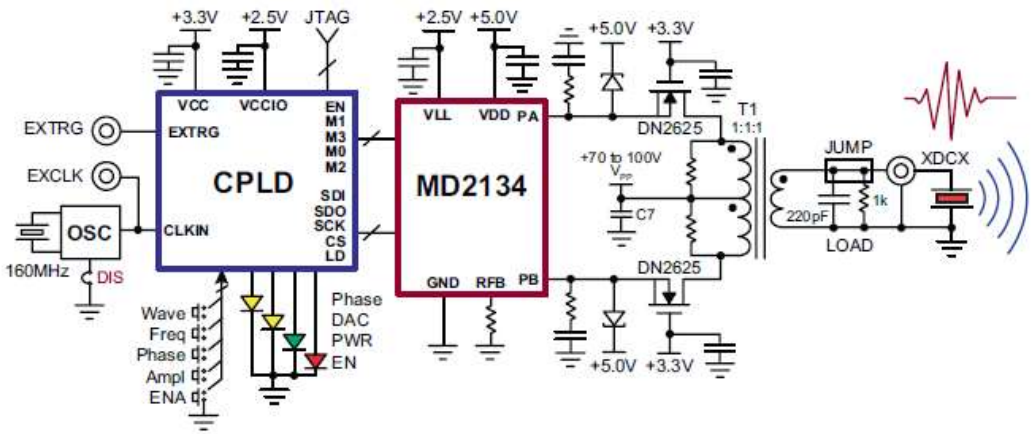

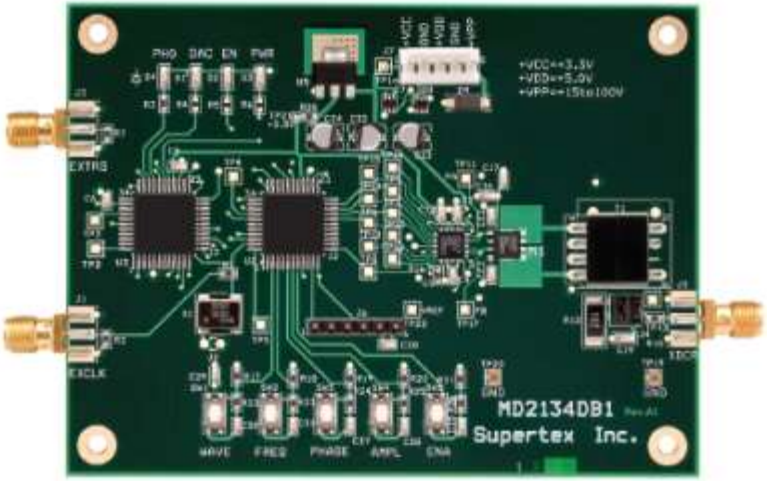

<< BACK

P/N: MD2134DB1

MD2134DB2 Demo Board

Online Info

The MD2134DB2 demoboard is to used to generate the ultrasound transmit beamforming waveform with the Gaussian profile, and the adjustable frequency, amplitude and phase angle. It also provides information on how to design a user application circuit and PCB using the Supertex MD2134 and DN2625 devices. The MD2134DB2 circuit uses two depletion-mode MOSFETs in the push-pull mode to drive the coupled inductor. The sources of the MOSFETs are directly driven by the MD2134's two outputs, whose maximum peak sinking current is up to 3.0A. These current source outputs are controlled by the MD2134's internal array-switch of the fast PAM current sources.

Products supported

- MD2134

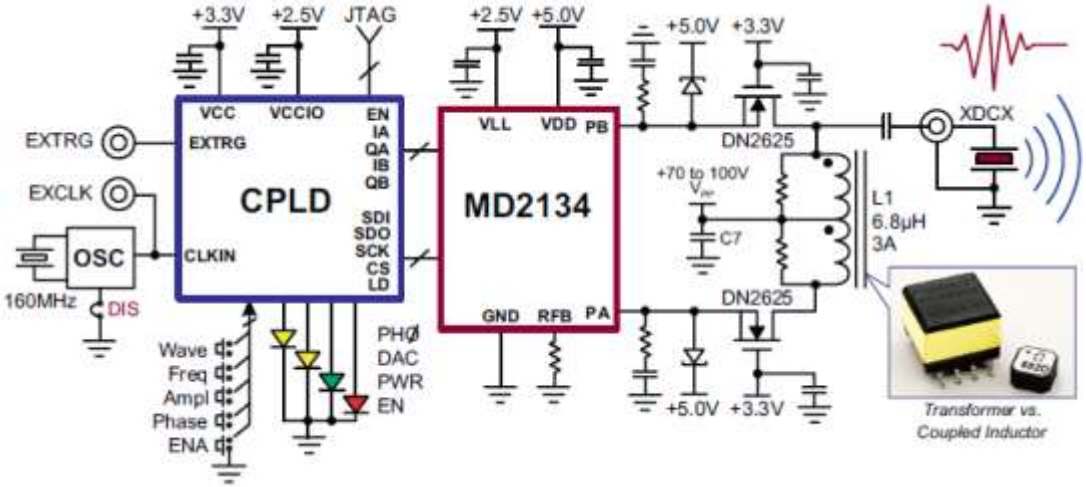

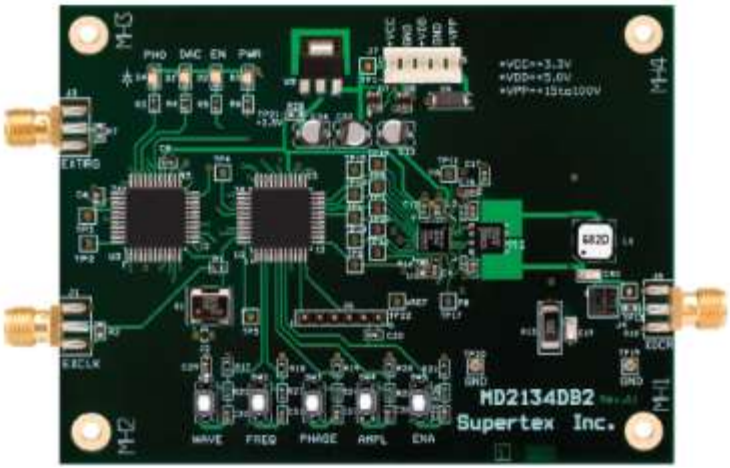

<< BACK

P/N: MD2134DB2

CW01DB1 Demo Board

Online Info

The CW01 has 6 logic inputs; OE, CLK, DIN1, DIN2, DIN3, and DIN4. Every logic input has a 10kΩ pull down resistor. There are 3 power input voltages: VLL, VDD and VDX. VLL is the input logic level, typically 2.5V. VDD is the level translator, typically 5.0V. VDX is the gate drive voltage, and is at the same voltage level as VDD. High peak currents will be drawn from VDX during switching. Each supply has a series ferrite bead and a 0.1µF ceramic chip capacitor to keep the supply clean from high frequency noise. There are 4 outputs: HV1, HV2, HV3 and HV4. These are the connections to the drains of 100V, 7.0Ω, N-channel MOSFETs.

Products supported

- CW01

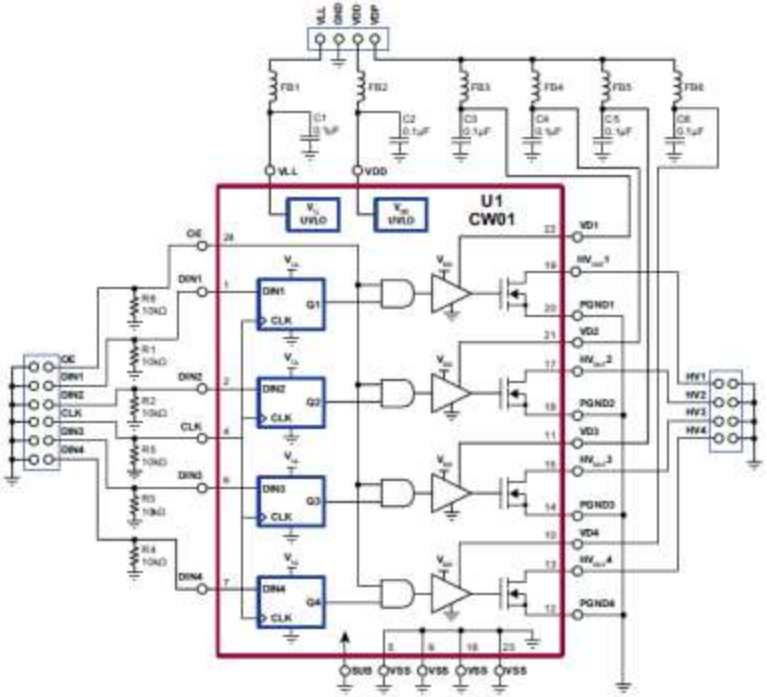

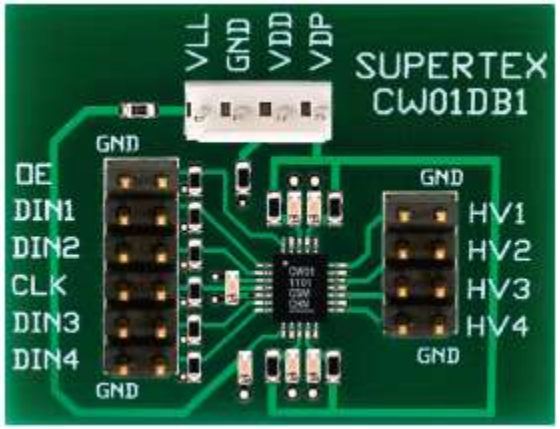

<< BACK

P/N: CW01DB1

HV748DB1 Demo Board

Online Info

The HV748DB1 demoboard is used to generate the basic high voltage pulse waveform as an ultrasound transmitting pulser. The HV748 circuit uses the DC coupling method in all level translators. There are no external coupling capacitors needed. The VPP and VNN rail voltages can be changed rather quickly, compared to a high voltage capacitor gate coupled driving pulser. This direct coupling topology of the gate drivers not only saves two high voltage capacitors per channel, but also makes the PCB layout easier.

Products supported

- HV748

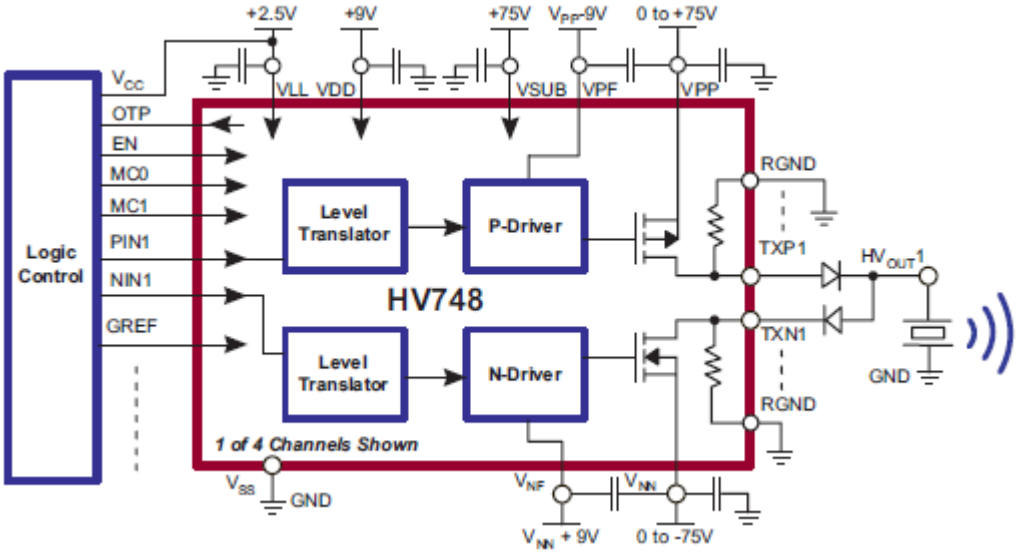

<< BACK

P/N: HV748DB1

AN-H59DB1 Demo Board

Online Info

The AN-H59DB1 is a high voltage DC/DC converter power supply demoboard designed to provide the required voltages needed for the HV748DB1 ultrasound transmitter demo board. It generates five output voltages from the 12V input.

Products supported

- HV748

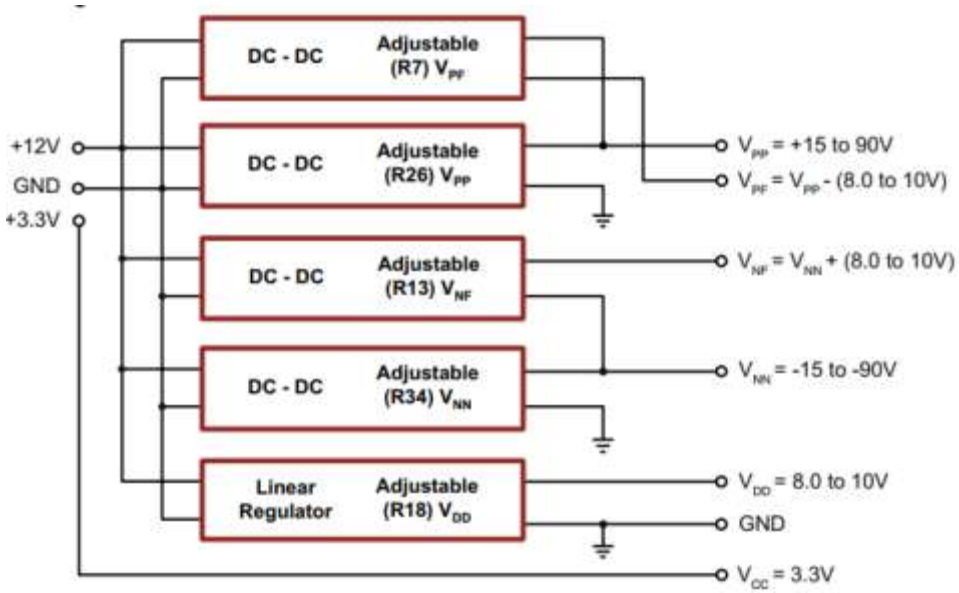

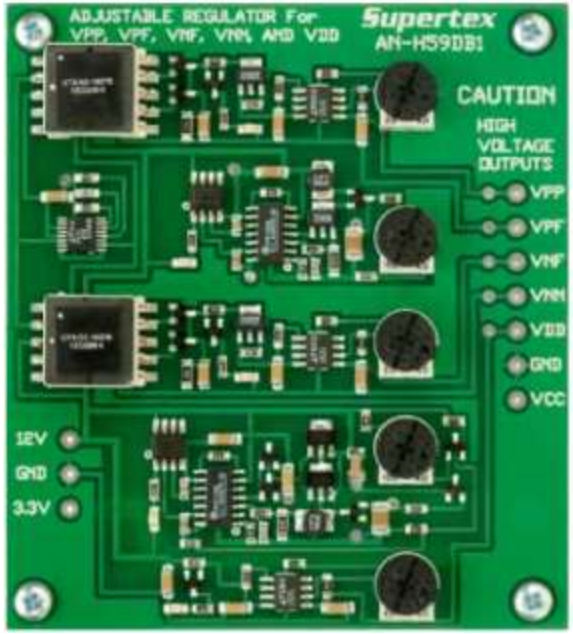

<< BACK

P/N: AN-H59DB1

HV7350DB1 Demo Board

Online Info

The HV7350DB1 demoboard is used to generate the basic high voltage pulse waveform as an ultrasound transmitting pulser. The HV7350 circuit uses DC coupling from a 3.3V logic input to output Tx1~8 internally, therefore the chip needs three sets of voltage supply rails: VLL +3.3V, VDD +5.0V and VPP/VNN ±10 to ±60V. The VPP and VNN rail voltages can be changed rather quickly, compared to the capacitor gatecoupled driving pulsers. This direct coupling topology of the gate drivers not only saves two high voltage capacitors per channel, but also makes the PCB layout easier.

Products supported

- HV7350

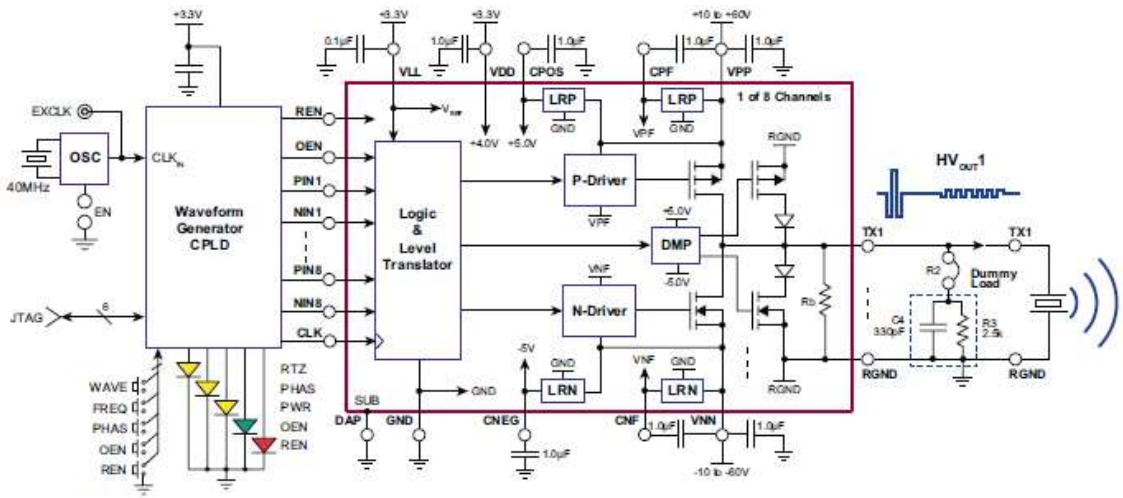

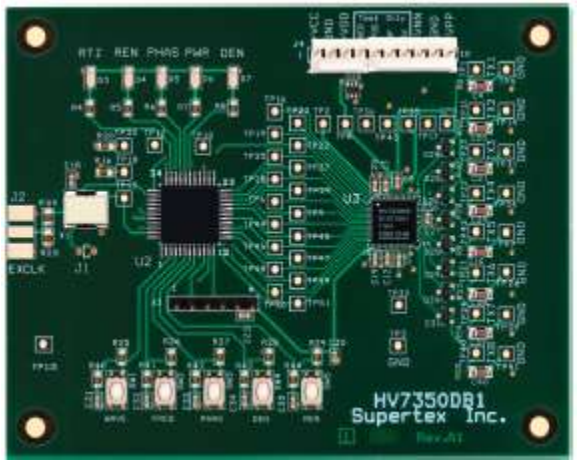

<< BACK

P/N: HV7350DB1

HV7351 Demo Board

Online Info

HV7351 is an 8-channel programmable high-voltage ultrasound-transmit beamformer. Each channel is capable of swinging up to +/-70V with an active discharge back to 0V. The outputs can source and sink up to 3.0A to achieve fast output rise time and fall times.
There are two complex programmable logic devices (CPLDs) and one serial EEPROM on the HV7351 demo board to provide multiple demo waveform patterns. The output waveforms can be directly displayed using an oscilloscope, by connecting the oscilloscope probe to the test points TX1 - TX8 on the demo board. The dummy load, 330 pF || 2.5K Ohm, is also provided on board for each channel.

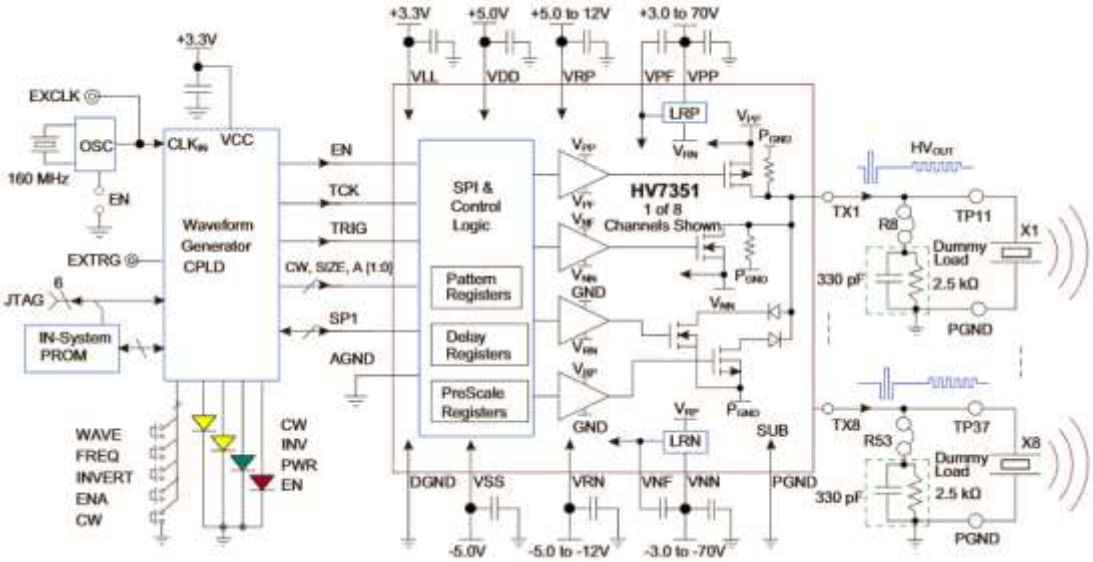

Products supported

- HV7351

<< BACK

P/N: ADM00658

HV892DB1 Demo Board

Online Info

The HV892DB1 liquid lens driver demoboard is controlled via an I2C interface, is capable of driving capacitive loads of up to 200pF, and is compatible with 40VRMS to 60VRMS lenses. A charge pump boost converter integrated on-chip provides the high voltage necessary for driving the lens. No external inductors or diodes are needed. The board requires only two ceramic chip capacitors to complete a lens driver circuit. An H-bridge output stage provides AC drive to the lens, allowing the use of a single high voltage boost converter while providing alternating polarity to the lens. Controlled rising and falling edges on the drive waveform reduces EMI.

Products supported

- HV892

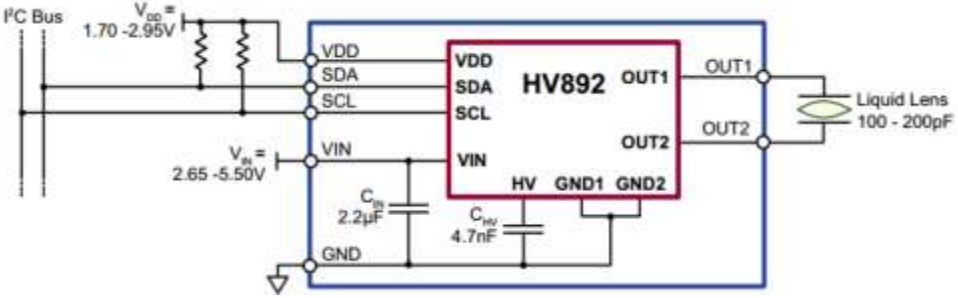

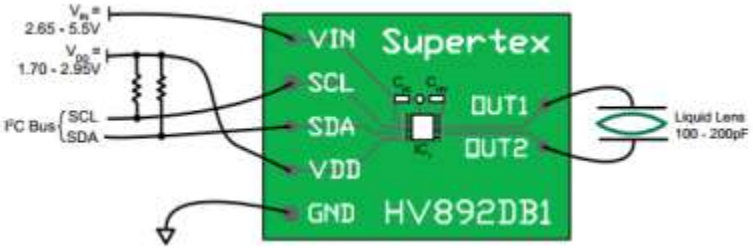

<< BACK

P/N: HV892DB1

HV7100DB1 Demo Board

Online Info

The HV7100DB1 is a fan controller/driver designed to operate from +24 or +48V supplies. Fan speed is controlled by pulse width modulating the supply voltage provided to the fans. For fans that do not work properly with a PWM supply, an included daughter board contains an LC filter for converting the pulse width modulated output of the main board to a DC output voltage

Products supported

- HV7100

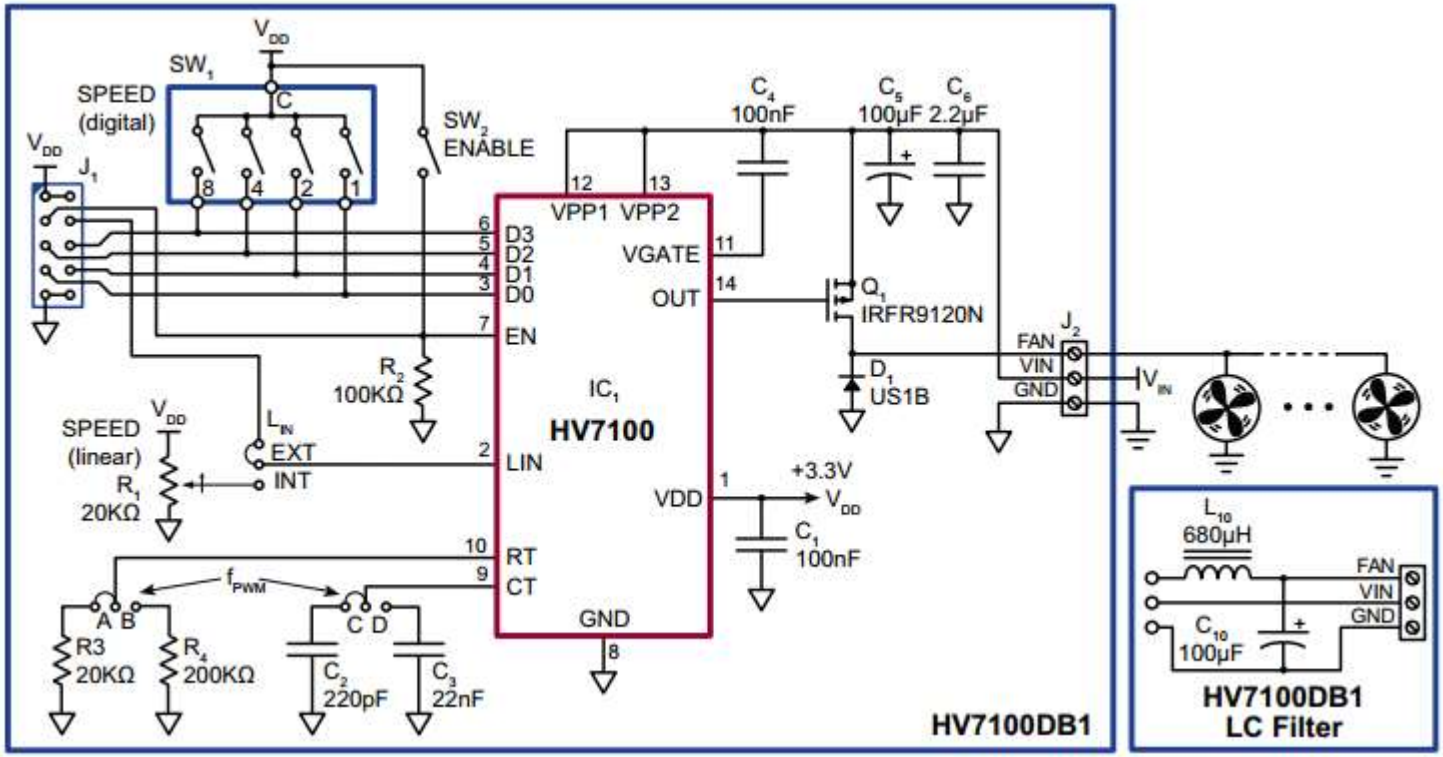

<< BACK

P/N: HV7100DB1

HV254DB1 Demo Board

Online Info

The HV254DB1 is a 32-channel 250V amplifier array with a nominal gain of 50V/V. The HV254DB1 provides a means to easily evaluate the HV254FG device. A high voltage supply, VPP, and two low voltage supplies, V+ and V-, are required. These connections can be made via the J1 header provided on the board. There are 32 pads on the left side of the board for the input signals and 32 pads on the right for the outputs.

Products supported

- HV254

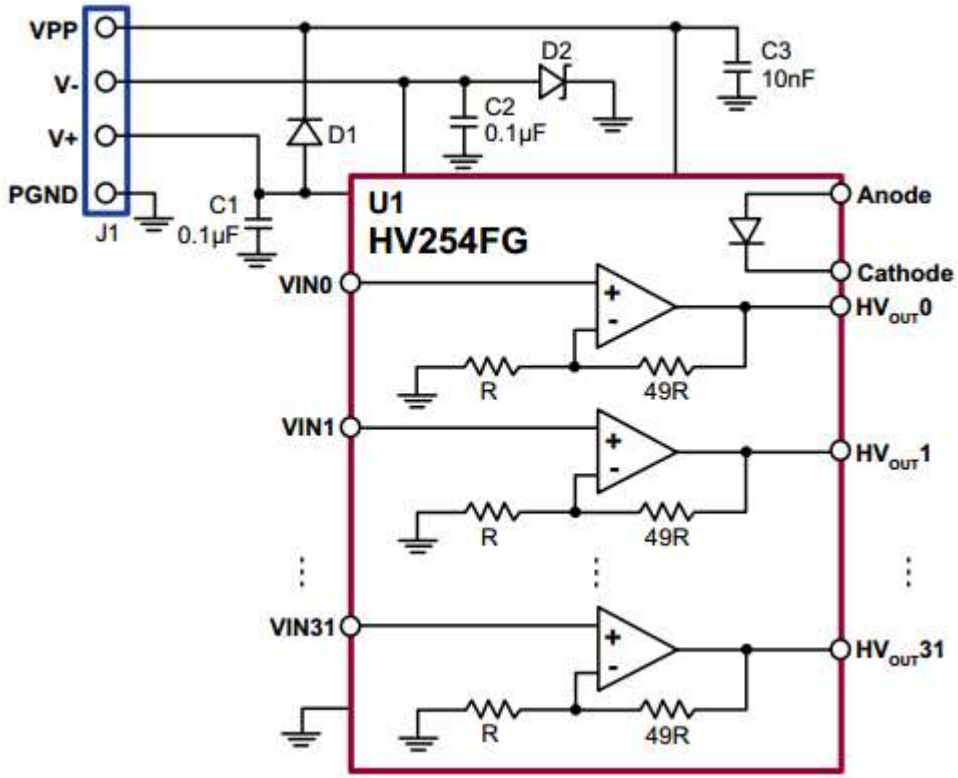

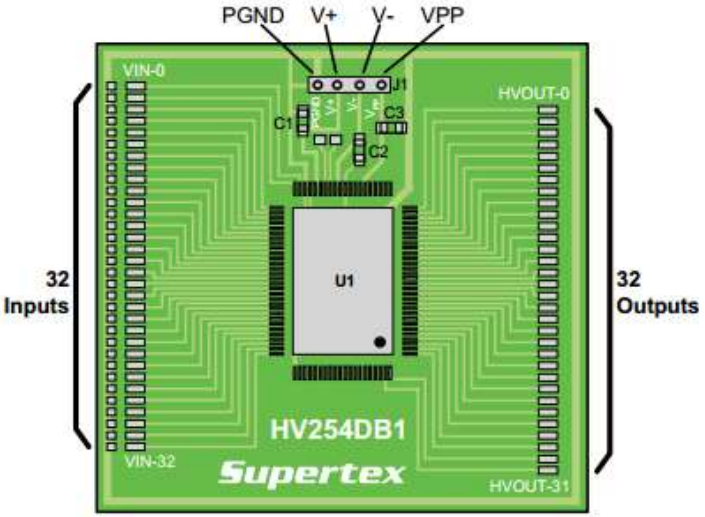

<< BACK

P/N: HV254DB1

HV256DB1 Demo Board

Online Info

The HV256DB1 is a 32-Channel 295V amplifier array with a nominal gain of 72V/V. The purpose of the HV256DB1 is to provide a means to easily evaluate the HV256FG device. A high voltage supply, VPP, and two low voltage supplies, VDD and VNN, are required. These connections can be made via the J1 header provided on the board. There are 32 pads on the left side of the board for the input signals and 32 pads on the right for the outputs.

Products supported

- HV256

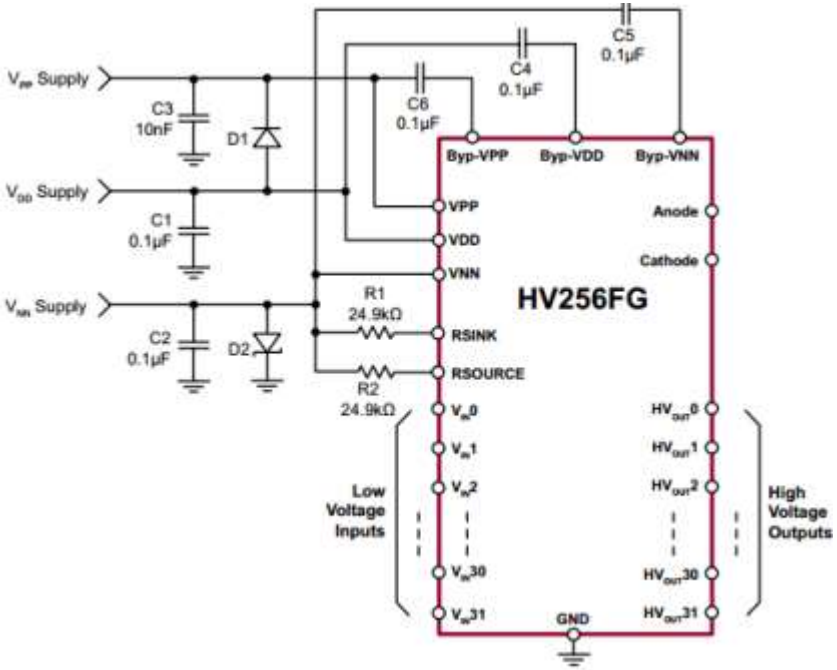

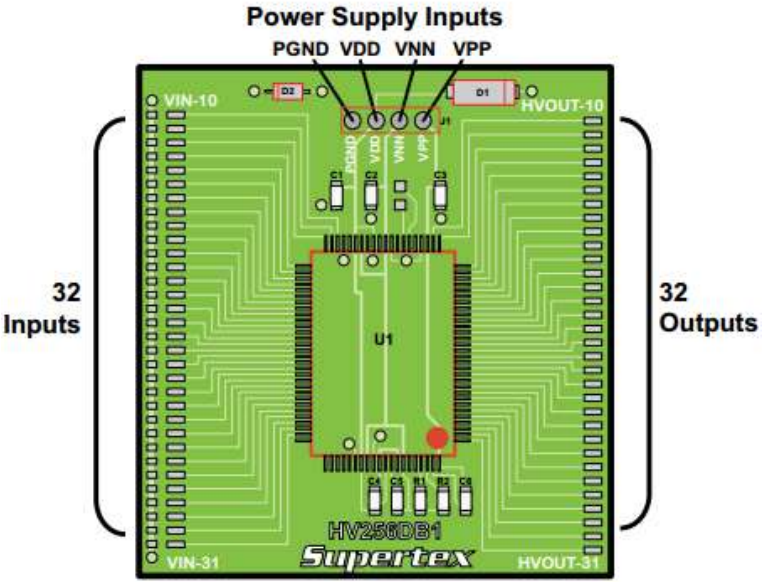

<< BACK

P/N: HV256DB1

HV257DB2 Demo Board

Online Info

The HV257DB2 is a 32-Channel, 295V, sample and hold amplifier array with a nominal gain of 72V/V. The purpose of the HV257DB2 is to provide a means to easily evaluate the HV257FG device. A high voltage supply, VPP, and four low voltage supplies, AVDD and DVDD, AVNN and DVNN, are required. Referring to the demo board drawing shown below, the logic and VSIG connections are on the left, the high voltage outputs are on the bottom, and the supplies are on the right.

Products supported

- HV257

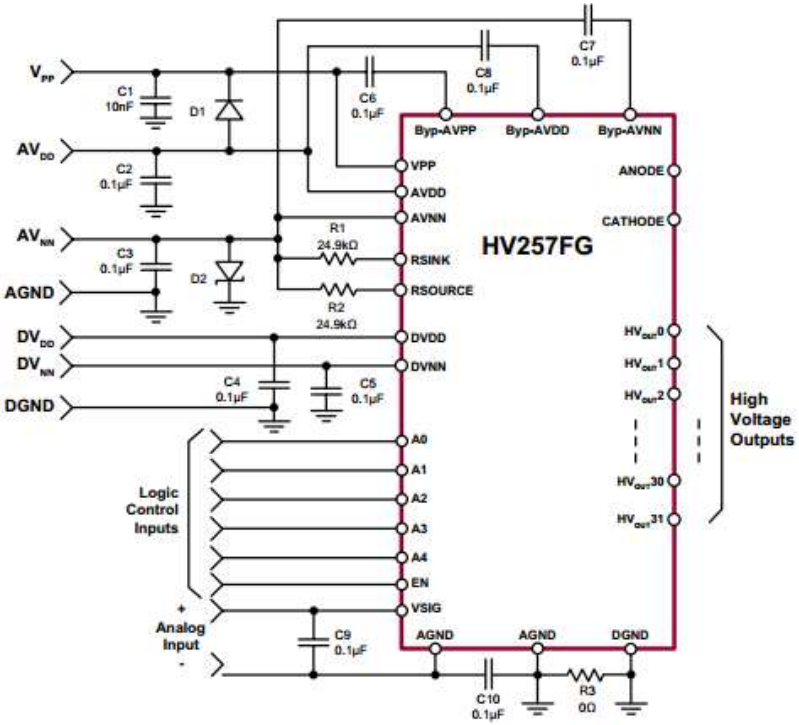

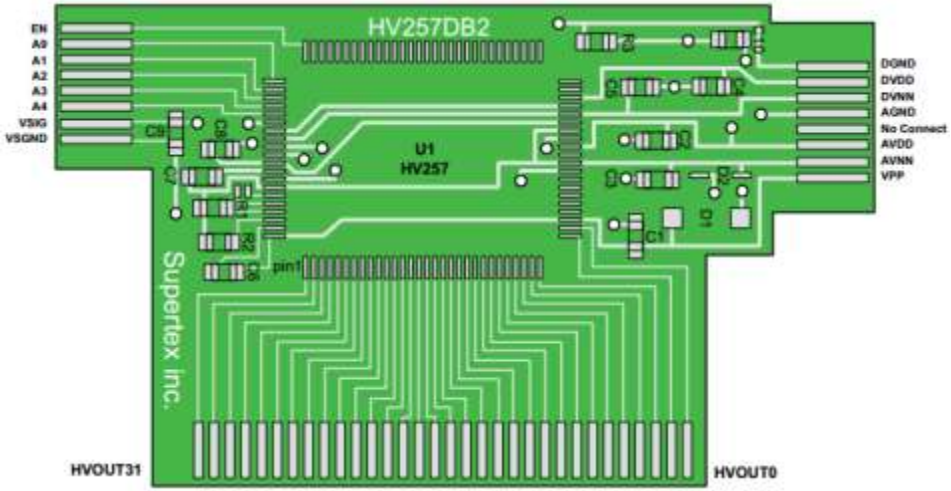

<< BACK

P/N: HV257DB2

HV264DB1 Demo Board

Online Info

The HV264TS-G is a quad high voltage amplifier array device in a 24-pin TSSOP package. The HV264DB1 demo board provides a platform to evaluate this device. This demoboard requires only a minimum setup including a VDD low voltage supply, a VPP high voltage supply, and a signal source. The demoboard provides the input/output connections through two 6-pin headers.

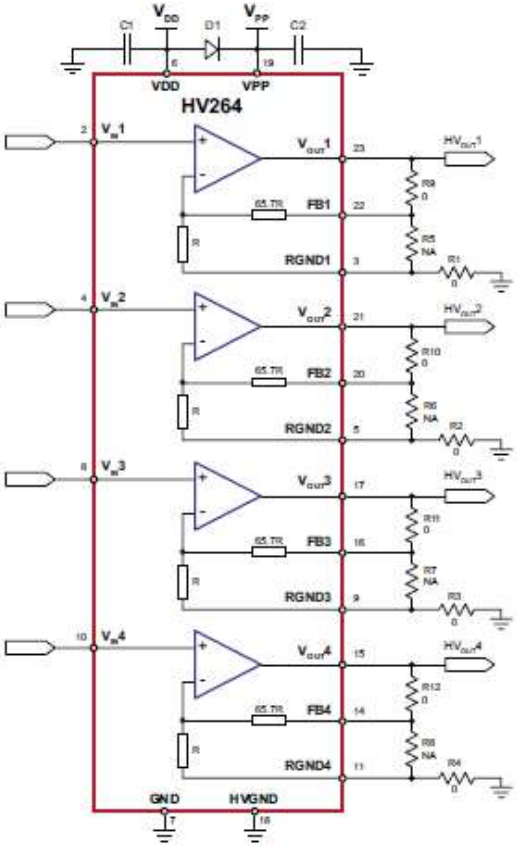

Products supported

- HV264TS-G

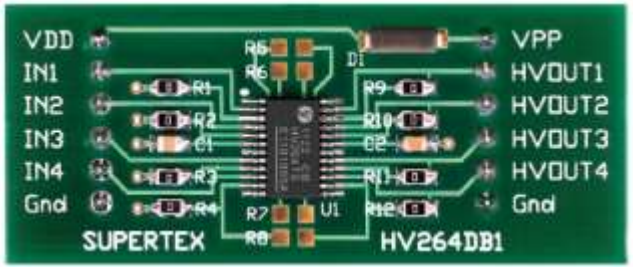

<< BACK

P/N: HV264DB1

HV9910BDB1 Demo Board

Online Info

The HV9910BDB1 demoboard is an offline, high current LED driver designed to drive a 40V LED string at 1.4A from a 110V input. The demoboard uses HV9910B LED driver IC to drive a buck converter.
The HV9910BDB1 has a typical full load efficiency of 88%, with the buck converter efficiency (excluding the diode bridge rectifier and EMI filter) at 93%. The demoboard also meets CISPR-15 conducted EMI standards.
The output current can be adjusted in two ways – either with linear dimming using the onboard potentiometer or with PWM dimming by applying a TTL-compatible square wave signal at the PWMD terminal. Using linear dimming, the output current of the HV9910DB1 can be lowered to about 0.1A (note: zero output current can be obtained only by PWM dimming).

Products supported

- HV9910BNG-G

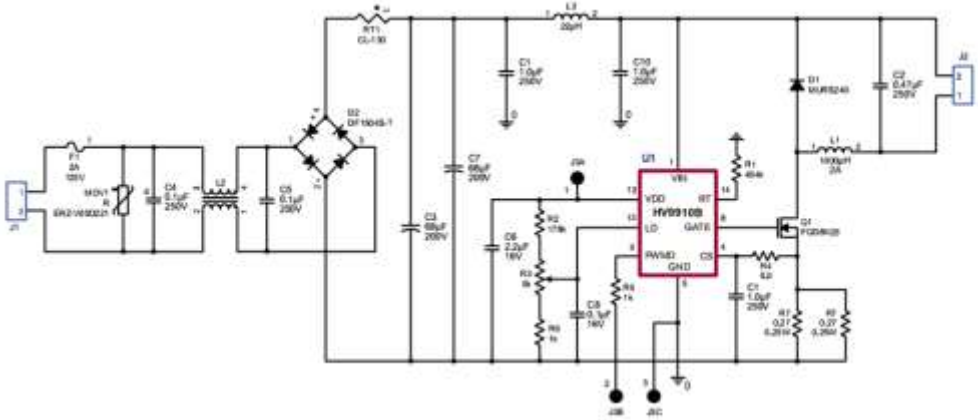

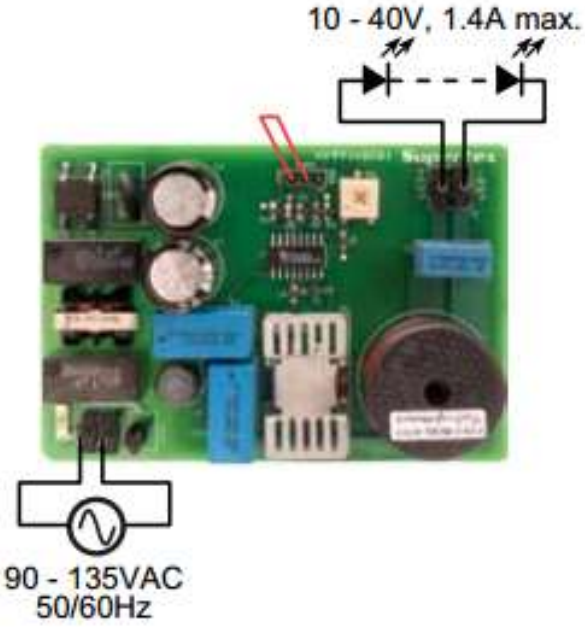

<< BACK

HV9910BDB2 Demo Board

Online Info

The HV9910BDB2 demoboard is a high brightness LED power driver to supply a string of LEDs using the HV9910B IC from a universal AC input. The HV9910BDB2 can supply a maximum output current of 350mA to drive 10 - 40V LED strings from a wide input voltage - 90 to 265VAC, 50/60Hz. The power conversion stage of the HV9910BDB2 consists of a diode bridge rectifier, followed by a current-controlled buck converter operating at a switching frequency of 50kHz. The nominal output current of the demoboard can be adjusted to any value between 30 and 350mA using the on-board trimming potentiometer. PWM dimming can be achieved by applying a pulse-width-modulated square wave signal between the PWMD and GND pins. Zero output current can be obtained only by PWM dimming. The HV9910BDB2 is not CISPR-15 compliant. Additional filtering is required to make the board meet CISPR-15 limits.

Products supported

- HV9910BNG-G

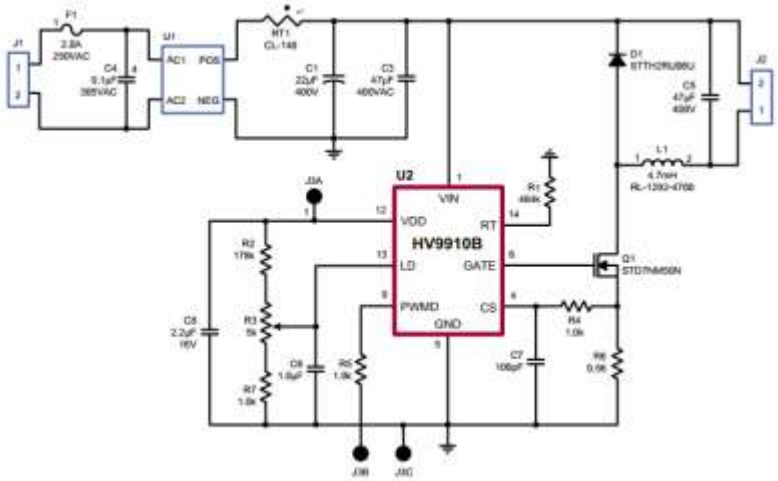

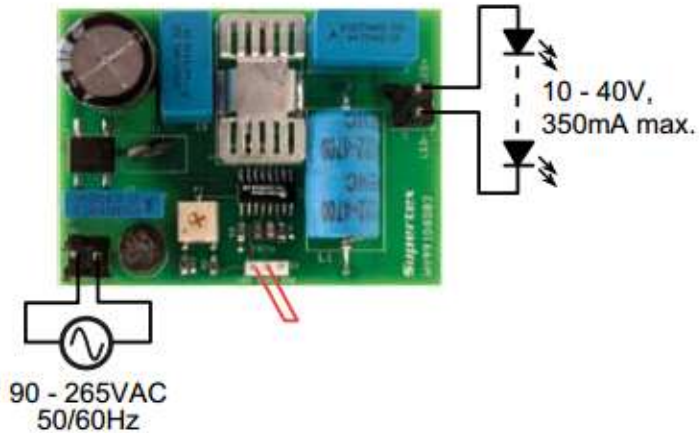

<< BACK

P/N: HV9910BDB2

HV9910BDB3 Demo Board

Online Info

The HV9910BDB3 demoboard is a high current LED driver designed to drive one LED or two LEDs in series at currents up to 1.0A from a 10 – 30VDC input. The demoboard uses HV9910B Universal LED driver IC to drive a buck converter. The HV9910BDB3 can be configured to operate in either a constant frequency mode (for driving a single LED) or in a constant off-time mode (for driving two LEDs). The output current can be adjusted in two ways – either with linear dimming using the onboard potentiometer or with PWM dimming by applying a TTL – compatible square wave signal at the PWMD terminal. Using linear dimming, the output current of the HV9910DB1 can be lowered to about 0.01A (note: zero output current can be obtained only by PWM dimming).

Products supported

- HV9910BLG-G

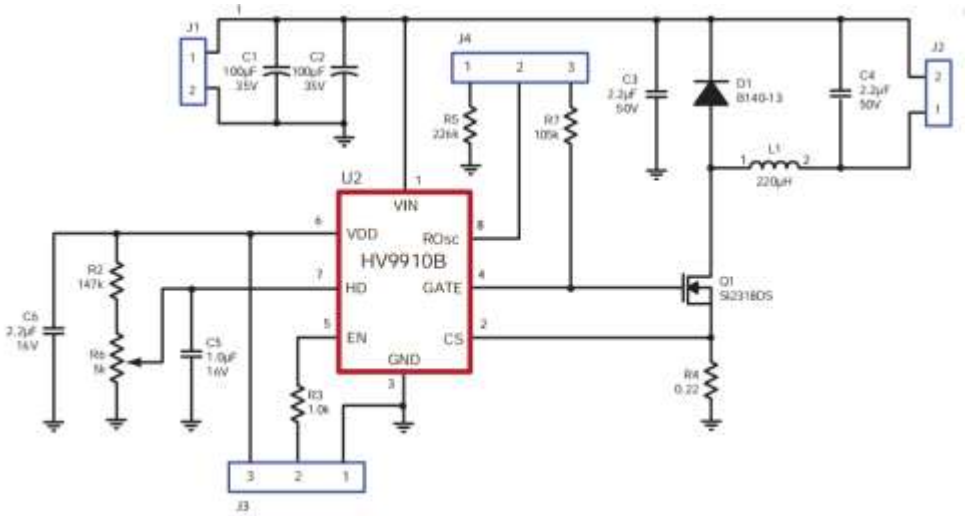

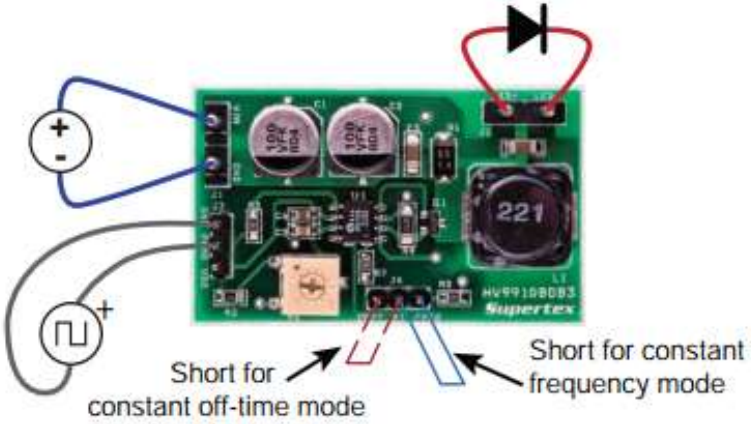

<< BACK

HV9910BDB7 Demo Board

Online Info

The HV9910BDB7 demonstrates the use of an HV9910B control IC in an off-line, High Brightness LED driver application. The board incorporates power factor correction (PFC) and satisfies the limits for harmonic currents according to the EN61000-3-2 Class C standard having total harmonic distortion (THD) less than 20%. The board features a low component count and long life operation due to the absence of electrolytic capacitors. The board is designed to supply a string of LEDs with a current of 350mA and a voltage in the 65 to 105V range from a 220/230VAC line.

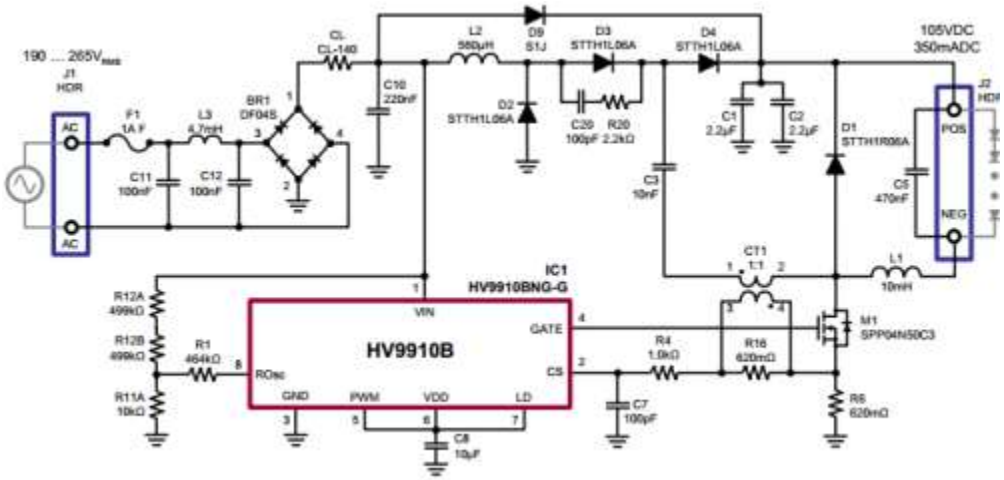

Products supported

- HV9910BLG-G

Top View

Bottom View

<< BACK

HV9918DB1 Demo Board

Online Info

The HV9918DB1 demoboard is a high current LED driver designed to drive one or two LEDs at 700mA from a 9.0 - 16VDC input. The demoboard uses HV9918 hysteretic buck LED driver IC.

Products supported

- HV9918K7-G

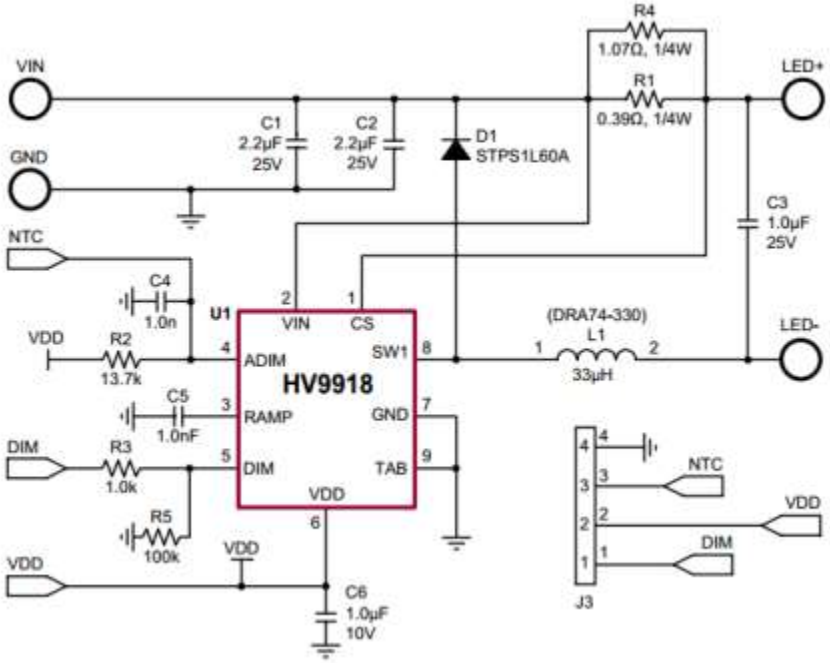

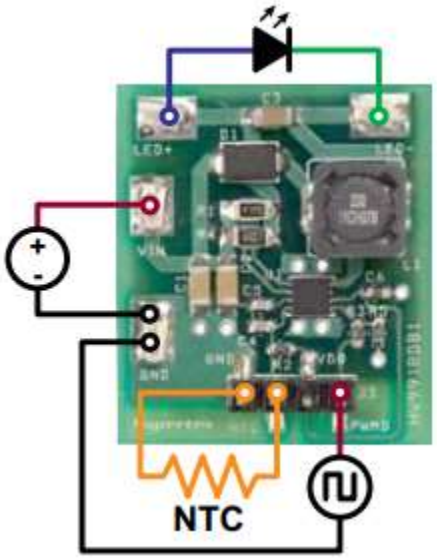

<< BACK

P/N: HV9918DB1

HV9919BDB1 Demo Board

Online Info

The HV9919BDB1 demoboard is a high current LED driver designed to drive one LED at 1.0A from a 9.0 - 16V DC input. The demoboard uses HV9919 hysteretic buck LED driver IC. The HV9919BDB1 includes two PWM dimming modes. The analog control of the PWM dimming mode allows the user to dim the LED using a 0 - 2.0V analog signal applied between the ADIM and GND pins (0V gives 0% and 2.0V gives 100%). In this mode, the PWM dimming frequency is set to 1kHz on the board. The digital control of PWM dimming mode allows the user to dim the LEDs using an external, TTL-compatible square wave source applied between DIM and GND. In this case, the PWM dimming frequency and duty ratio are set by the external square wave source.

Products supported

- HV9919BK7-G

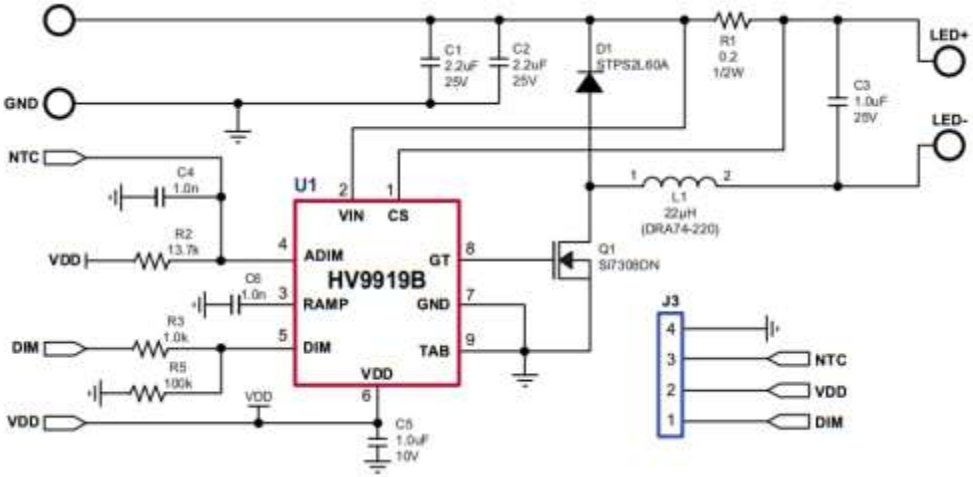

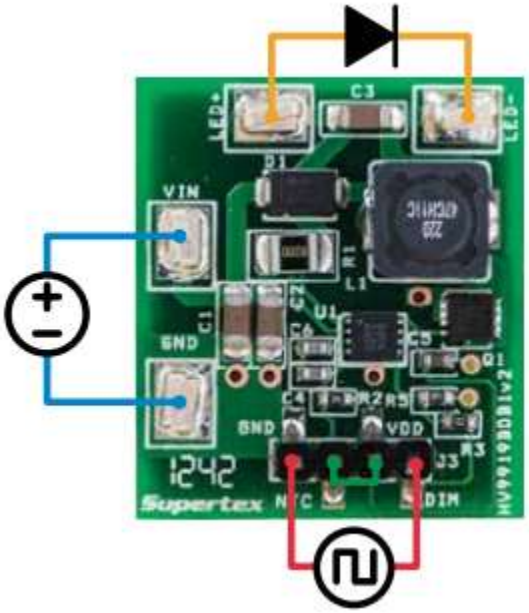

<< BACK

P/N: HV9919BDB1

HV9921DB1 Demo Board

Online Info

The HV9921DB1 demoboard is a complete LED power driver to supply a string of LEDs using the HV9921, an integrated 3-pin high input voltage constant-current buck regulator IC. The HV9921 integrates a 500V switching MOSFET and can operate directly from the rectified universal AC line voltage range of 80 to 265VAC. The current in the LED string is internally programmed to 20mA ±15%. The HV9921DB1 is ideally suited for driving strings of LEDs having forward voltage from 20 to 50V at high efficiency (typically 80% at 120VAC).The HV9921DB1 is a peak current-controlled buck converter operating with fixed off-time of 10.5us. Its fixed off-time control scheme provides good stability and tight regulation of the LED current throughout the input AC line voltage range. As its switching frequency varies over the AC line cycle, the HV9921 inherently introduces frequency dither and simplifies the compliance with EMI regulations.

Products supported

- HV9921N3-G

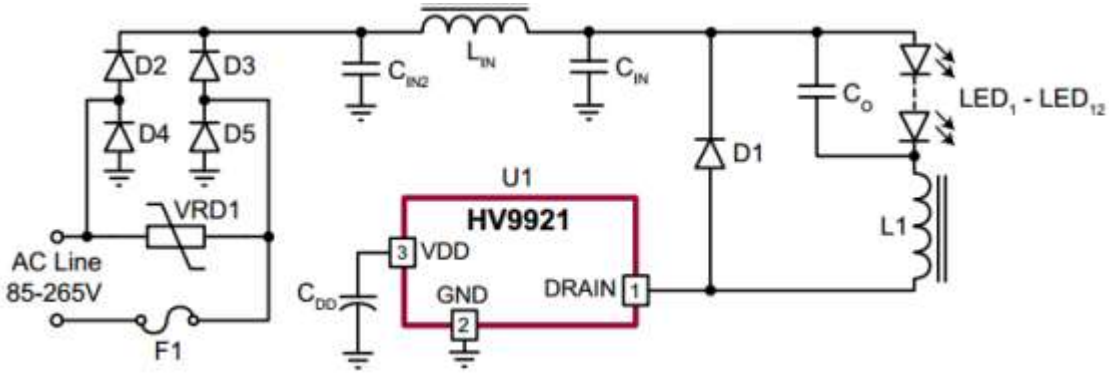

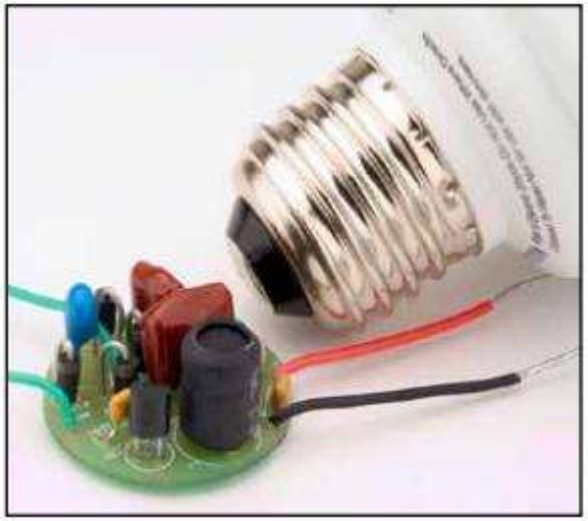

<< BACK

P/N: HV9921DB1

HV9922DB1 Demo Board

Online Info

The HV9922DB1 demoboard is a complete LED power driver to supply a string of LEDs using the HV9922, an integrated 3-pin high input voltage constant-current buck regulator IC. The HV9922 integrates a 500V switching MOSFET and can operate directly from the rectified universal AC line voltage range of 80 to 265VAC. The current in the LED string is internally programmed to 20mA ±15%. The HV9922DB1 is ideally suited for driving strings of LEDs having forward voltage from 20 to 30V at high efficiency (typically 80% at 120VAC).The HV9922DB1 is a peak current-controlled buck converter operating with fixed off-time of 10.5µs. Its fixed off-time control scheme provides good stability and tight regulation of the LED current throughout the input AC line voltage range. As its switching frequency varies over the AC line cycle, the HV9922 inherently introduces frequency dither and simplifies the compliance with EMI regulations.

Products supported

- HV9922N3-G

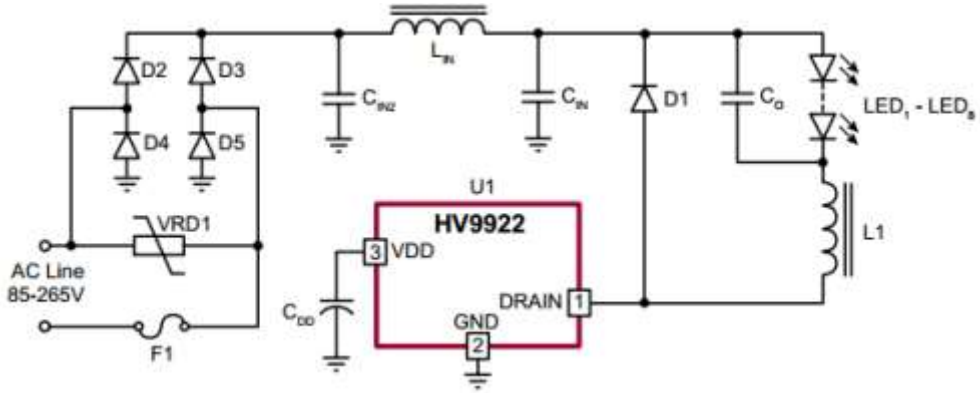

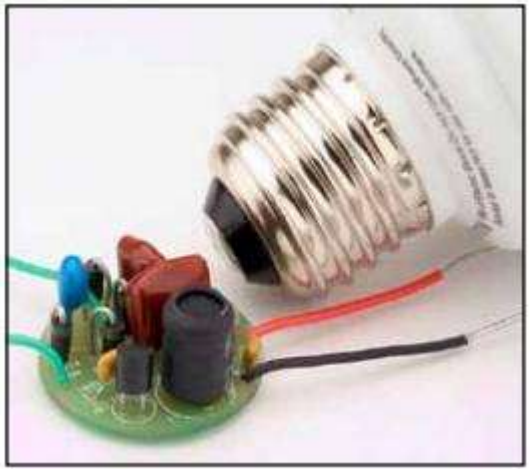

<< BACK

P/N: HV9922DB1

HV9922DB2 Demo Board

Online Info

The HV9922DB2 is a universal input, offline, non-isolated auxiliary power supply using HV9922 constant current switching regulator IC. The output voltage is regulated to 23V +/-5% and is referenced to the negative side of the diode bridge rectifier (i.e. ground of the rectified DC voltage). The demoboard is protected against output open circuit and short circuit conditions and meets FCC Class B (residential) EMI limits. The HV9922 acts as a constant 50mA current source which is sourced into an output zener diode. On the demoboard, a 22V zener diode is used at D2 to regulate the output voltage to 23V within +/-5%. Lower output voltages can be obtained by using an appropriate 2W zener diode in parallel to D2 in the space provided on the demoboard (D3).

Products supported

- HV9922N3-G

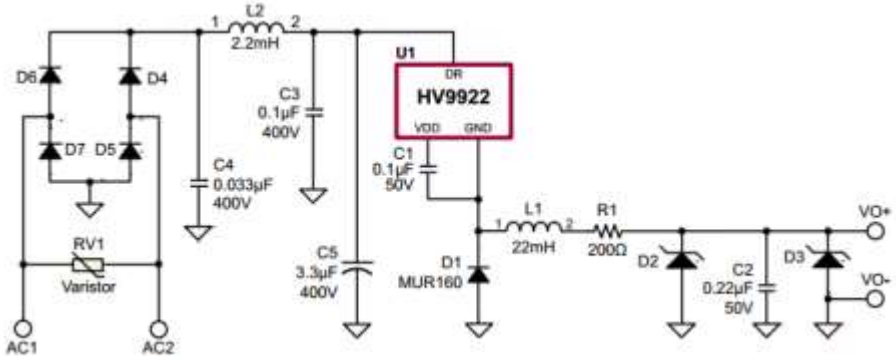

<< BACK

HV9923DB1 Demo Board

Online Info

The HV9923DB1 demoboard is a complete LED power driver to supply a string of LEDs using the HV9923, an integrated 3-pin high input voltage constant-current buck regulator IC. The HV9923 integrates a 500V switching MOSFET and can operate directly from the rectified universal AC line voltage range of 80 to 265VAC. The current in the LED string is internally programmed to 30mA ±15%. The HV9923DB1 is ideally suited for driving strings of LEDs having forward voltage from 20 to 30V at high efficiency (typically 80% at 120VAC). The HV9923DB1 is a peak current-controlled buck converter operating with fixed off-time of 10.5us. Its fixed off-time control scheme provides good stability and tight regulation of the LED current throughout the input AC line voltage range. As its switching frequency varies over the AC line cycle, the HV9923 inherently introduces frequency dither and simplifies the compliance with EMI regulations.

Products supported

- HV9923N3-G

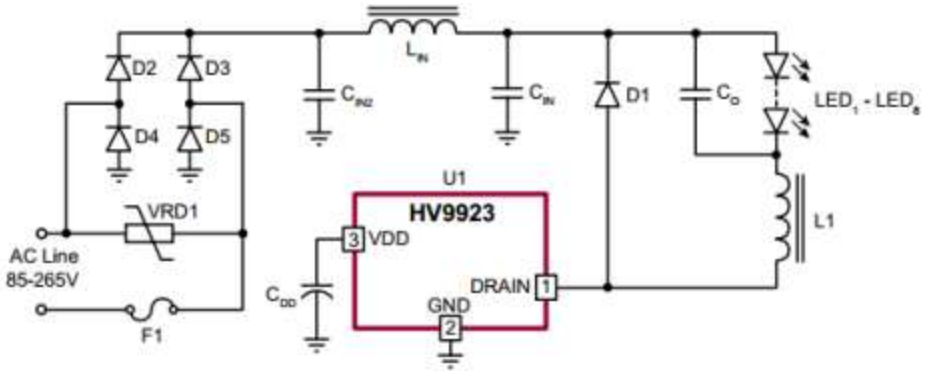

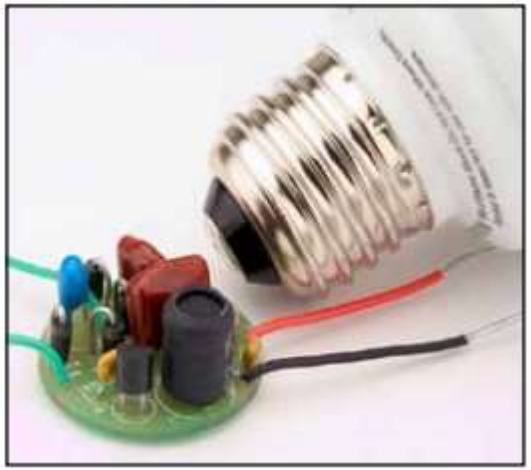

<< BACK

P/N: HV9923DB1

HV9925DB1 Demo Board

Online Info

The HV9925DB1 demo board is a complete LED power driver to supply a string of LEDs using the HV9925, an integrated, high-voltage, buck regulator IC featuring programmable output current and PWM dimming. The HV9925 includes a 500V switching MOSFET and can operate directly from rectified AC line voltages of 80 to 135VAC. The current in the LED string is externally programmed to 50mA ±10% by a single resistor RS. The HV9925DB1 is ideally suited for driving strings of LEDs having forward voltage from 20V to 60V at high efficiency. The HV9925DB1 is a peak current-controlled buck converter operating with a fixed off-time of 10.5µs. Its fixed off-time control scheme provides good stability and tight regulation of the LED current throughout the input AC line voltage range. As its switching frequency varies over the AC line cycle, the HV9925 inherently introduces frequency dither and simplifies the compliance with EMI regulations.

Products supported

- HV9925N3-G

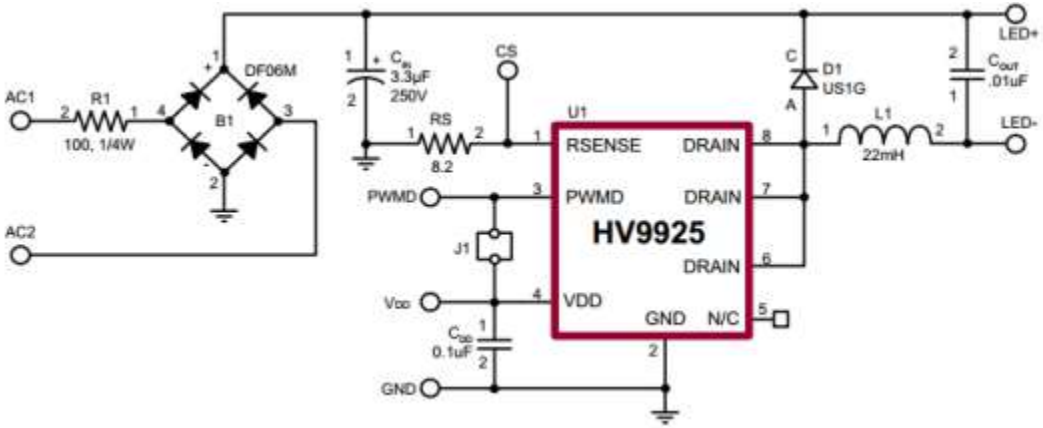

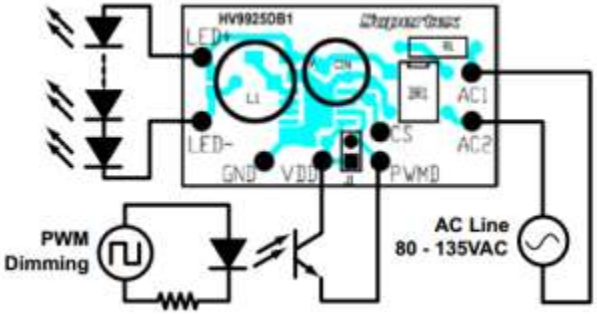

<< BACK

P/N: HV9925DB1

HV9930DB1 Demo Board

Online Info

The HV9930DB1 is an LED driver demoboard capable of driving up to 7 1-watt LEDs in series from an automotive input of 9 - 16VDC. The demoboard uses HV9930 in a boost-buck topology. The converter operates at frequencies in excess of 300kHz and has excellent output current regulation over the input voltage range. It can also withstand transients up to 42V and operate down to 6V input. The converter is also protected against open LED and output short circuit conditions. Protection against reverse polarity up to 20V is also included.

Products supported

- HV9930LG-G

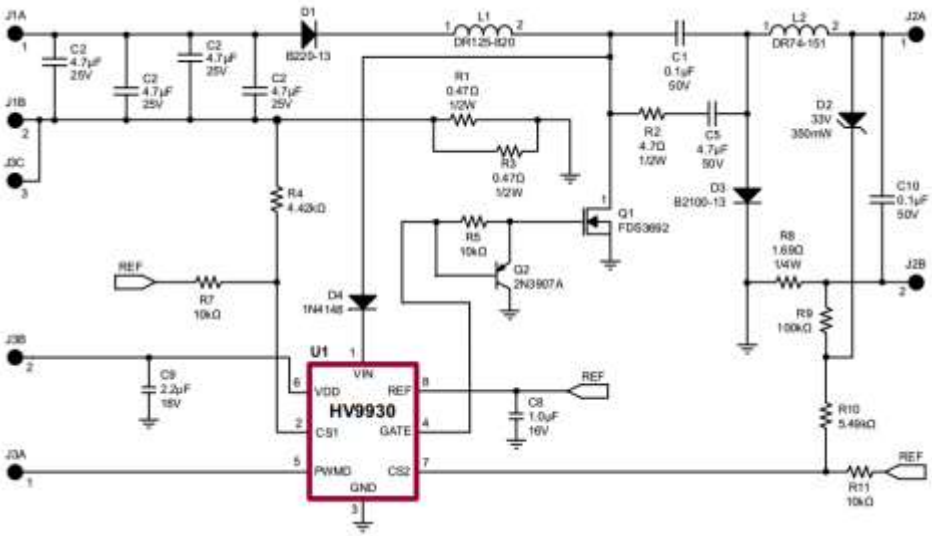

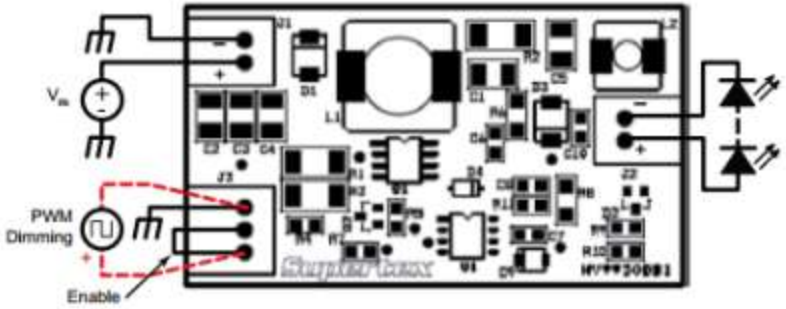

<< BACK

P/N: HV9930DB1

HV9930DB2 Demo Board

Online Info

The HV9930DB2 is a LED driver demoboard capable of driving 4 3-watt LEDs in series from an input of 9 - 25V DC. The demoboard uses HV9930 in a boost-buck topology. The converter has excellent line and load regulation over the entire input and output voltage range. The full load efficiency of the converter is typically greater than 80%. The converter is also protected against open LED and output short circuit conditions.

Products supported

- HV9930LG-G

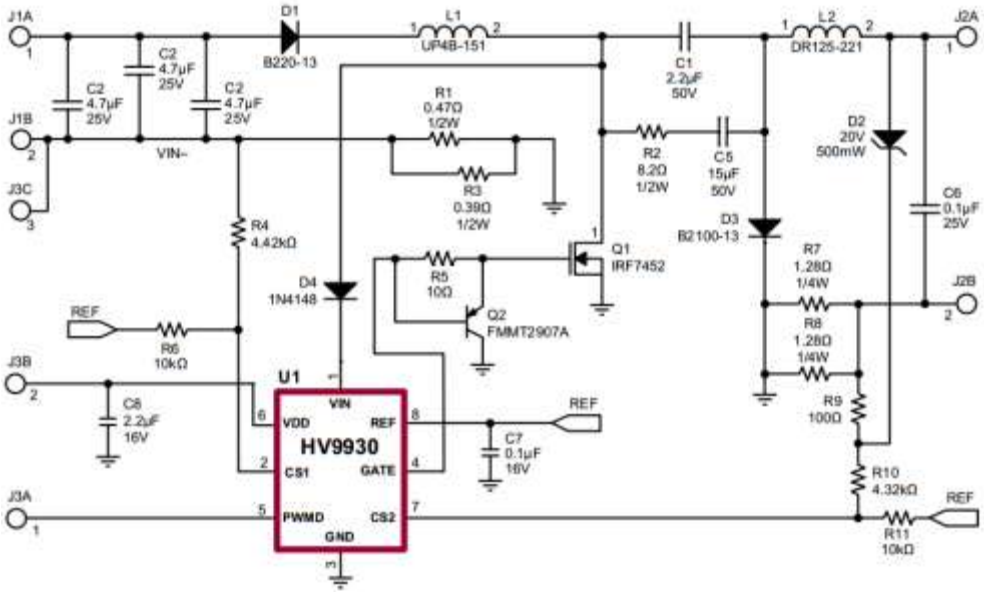

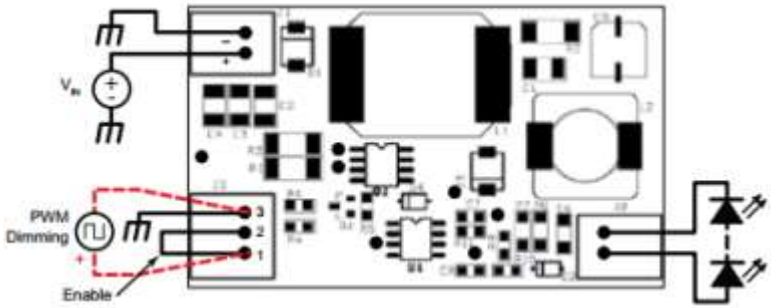

<< BACK

P/N: HV9930DB2

HV9931DB1 Demo Board

Online Info

The HV9931 LED driver is primarily targeted at low to medium power LED lighting applications where galvanic isolation of the LED string is not an essential requirement. The driver provides near unity power factor and constant current regulation using a two stage topology driven by a single MOSFET and control IC. Triac dimming of this design is possible with the addition of some components for preloading and inrush current shaping. The HV9931DB1 is designed for a fixed string current of 350mA and a string voltage of 40V for a load power of about 14W. The board will regulate current for an output voltage down to 0V. Nominal input is 120VAC. Design for universal input (85 to 265VAC) is by all means possible but does increase cost and size while lowering efficiency.

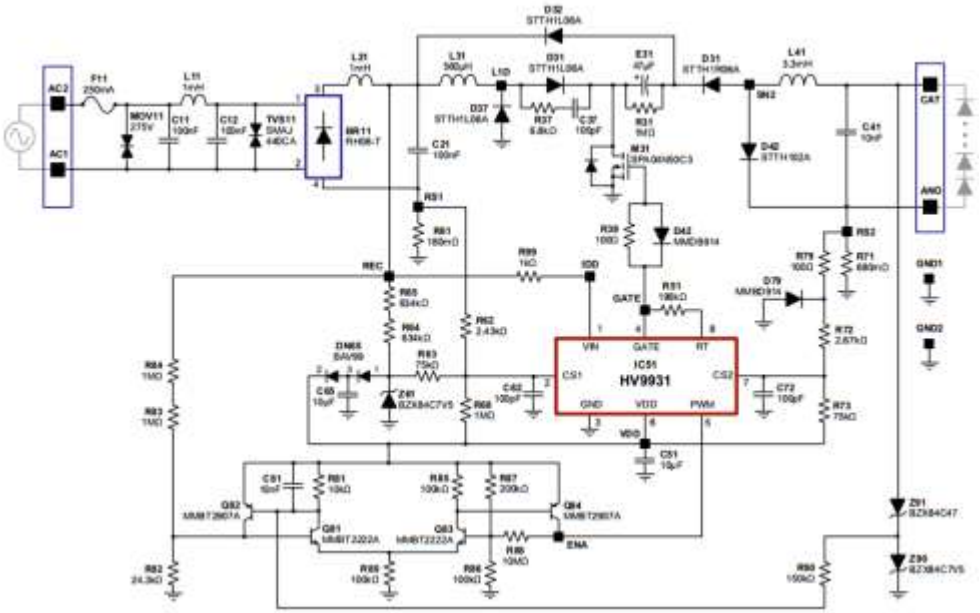

Products supported

- HV9931LG-G

<< BACK

P/N: HV9931DB1

HV9931DB2 Demo Board

Online Info

The HV9931 LED driver is primarily targeted at low to medium power LED lighting applications where galvanic isolation of the LED string is not an essential requirement. The driver provides near unity power factor and constant current regulation using a two stage topology driven by a single MOSFET and control IC. Triac dimming of this design is possible with the addition of some components for preloading and inrush current shaping. The HV9931DB2 IS designed for a fixed string current of 350mA and a string voltage of 40V for a load power of about 14W. The boards will regulate current for an output voltage down to 0V. Nominal input voltage is 230VAC. Design for universal input (85 to 265VAC) is by all means possible but does increase cost and size while lowering efficiency.

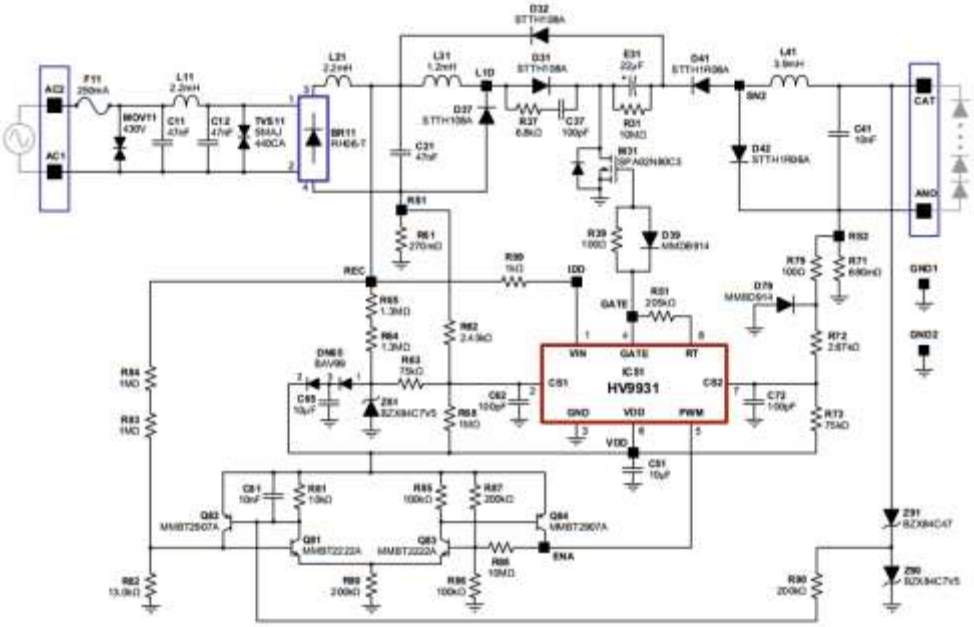

Products supported

- HV9931LG-G

<< BACK

P/N: HV9931DB2

HV9931DB5 Demo Board

Online Info

The HV9931DB5 demoboard is a high brightness (HB) LED power driver to supply one HB LED, using the HV9931 IC from either a 110 or 220VAC supply. The HV9931DB5 is ideal for incandescent retrofit applications, as it features a very small size and a low component count. The HV9931DB5 avoids the use of electrolytic capacitors, which reduce the lifetime of the circuit in high ambient temperatures (which would be found in the base of a bulb). The demo board can be used to test the performance of the HV9931 as a constant current driver to power LEDs. The HV9931DB5 uses a unique cascaded converter circuit, with a single active switch, to achieve the high step down conversion ratio required for operating low voltage LEDs from a high input voltage. This circuit allows the converter to operate at a high switching frequency, about 120kHz, while still regulating the output current at all times. The HV9931DB5 supplies 350mA to a 4.0V(max) LED with input voltages ranging from 90 – 265VAC 50/60Hz.

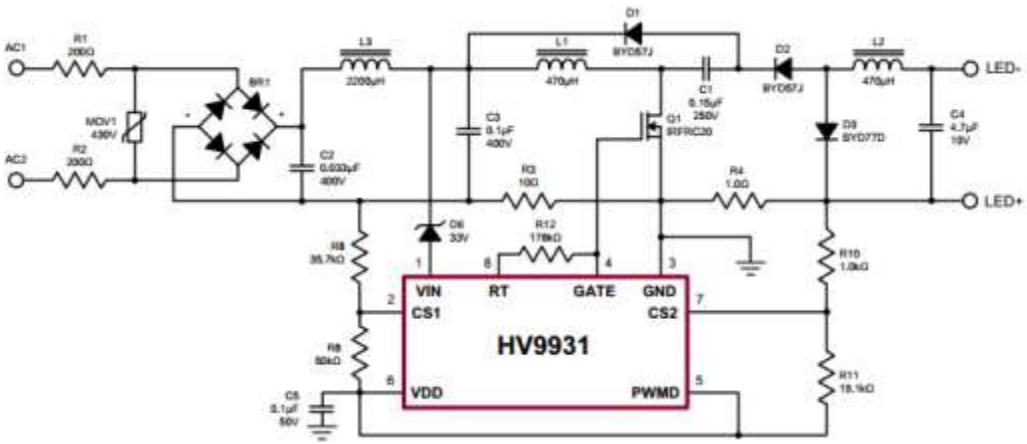

Products supported

- HV9931LG-G

<< BACK

P/N: HV9931DB5

HV9861ADB1 Demo Board

Online Info

The HV9861ADB1 demoboard is a high-brightness LED driver employing the patented average-mode, constant current control scheme. The power conversion stage of the HV9861ADB1 consists of a diode bridge rectifier followed by a buck converter operating with fixed off-time of 20µs. The HV9861ADB1 LED driver features tight regulation of the LED current within a few milliamps over the entire range of the input AC line and the output LED string voltage. The LED current accuracy is almost insensitive to the passive component tolerances, such as the output filter inductance or the timing resistor. The accuracy of the LED current is mainly determined by the internal 270mV ± 3% reference voltage of the HV9861A control IC and by the external current sense resistor tolerance.

Products supported

- HV9861ANG-G

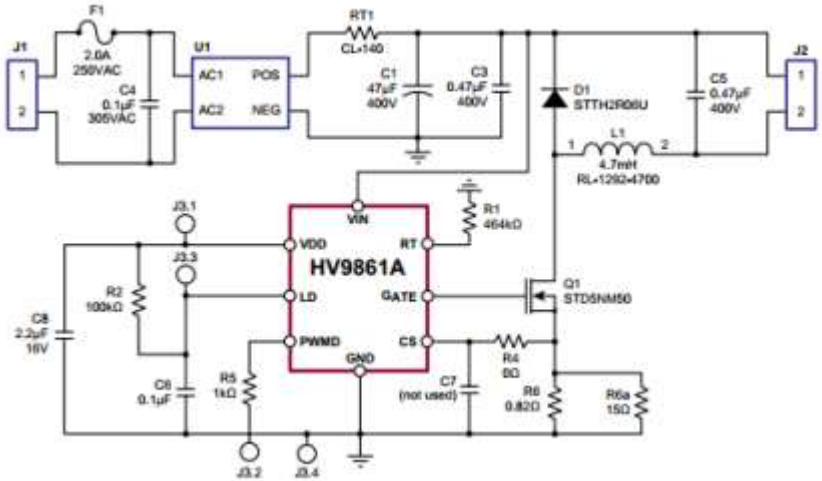

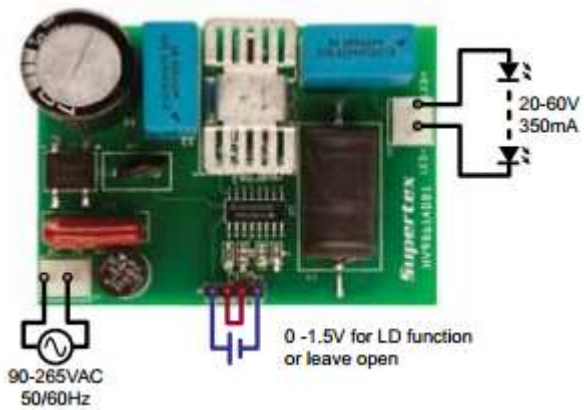

<< BACK

P/N: HV9861ADB1

HV9861ADB2 Demo Board

Online Info

Certain target markets for LED lighting require a power factor of at least 90%. A power factor over 90% can be attained using valley fill power factor correction with the addition of a small boost converter. The boost converter lowers line current distortion by adding line current draw in the valley and lowering the peak amplitude of the valley fill capacitor recharging current.

Products supported

- HV9861LG-G

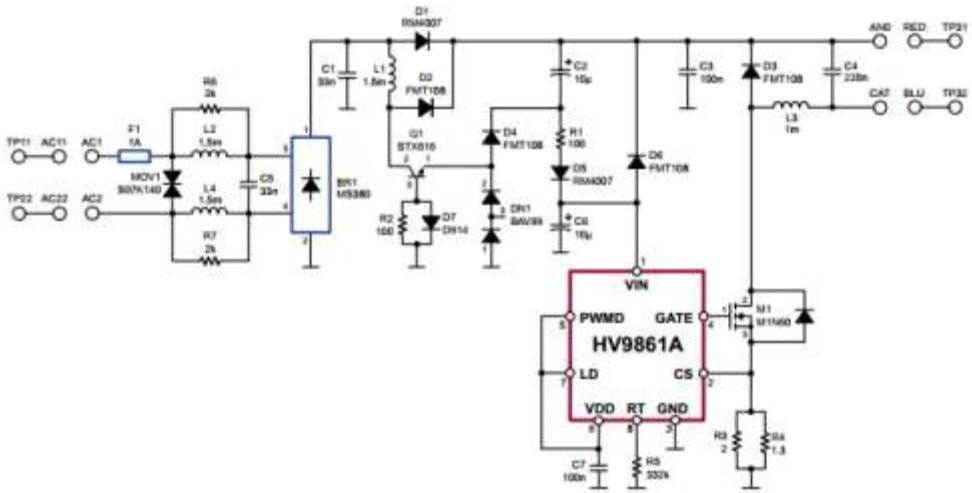

<< BACK

P/N: HV9861ADB2

HV9911DB1 Demo Board

Online Info

The HV9911DB1 is an LED driver capable of driving up to 20 one-watt LEDs in series from an input of 21 - 27VDC. The demoboard uses HV9911 in a boost topology. The converter has a very good initial regulation (+/- 5%) and excellent line and load regulation over the entire input and output voltage range (<+/- 1%). The full load efficiency of the converter is typically greater than 90%.

Products supported

- HV9911NG-G

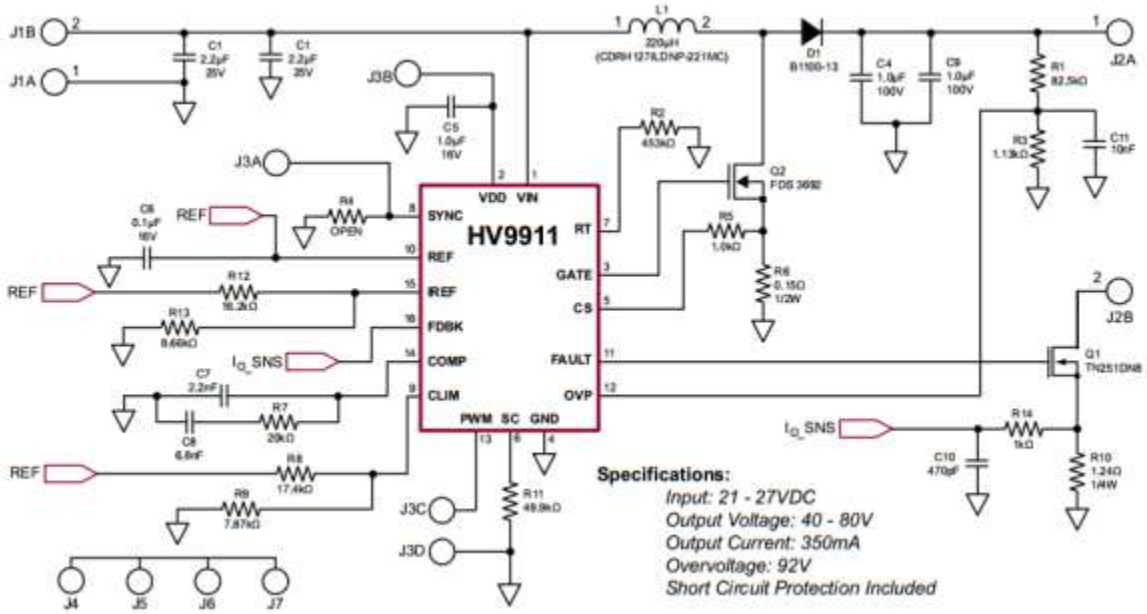

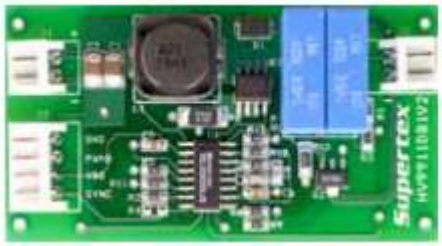

<< BACK

P/N: HV9911DB1

HV9911DB2 Demo Board

Online Info

The HV9911DB2 is an LED driver capable of driving up to twenty 100mA LEDs in series from an input of 9 - 16V DC. The demoboard uses HV9911 IC in a boost topology. The converter has a very good initial regulation, (+/- 5%), and excellent line and load regulation over the entire input and output voltage range (<+/- 1%). The full load efficiency of the converter is typically greater than 85%.

Products supported

- HV9911NG-G

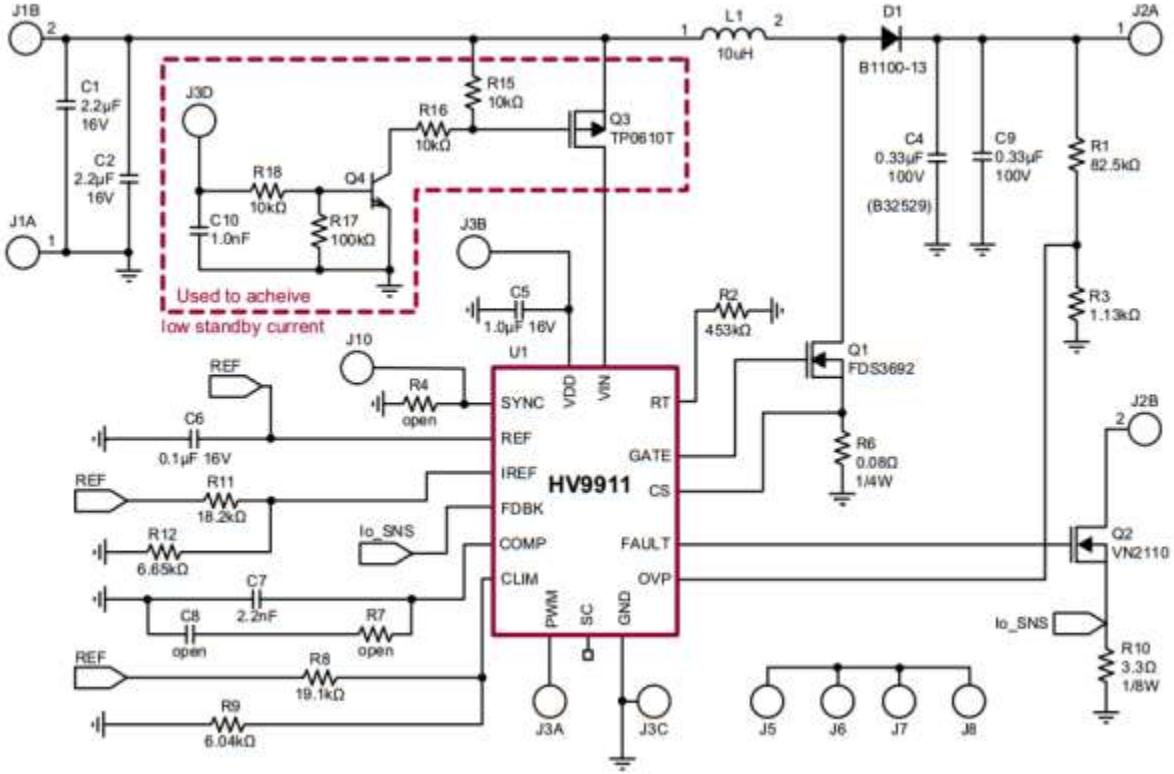

<< BACK

P/N: HV9911DB2

HV9911DB3 Demo Board

Online Info

The HV9911DB3 is an LED driver capable of driving up to 25 one-watt LEDs in series from an input of 130 - 200VDC. The demoboard uses Supertex's HV9911 in a buck topology with the HV7800 used for high side current sensing. The converter has a very good initial regulation (+/-5%) and excellent line and load regulation over the entire input and output voltage range (<+/-2%). The full load efficiency of the converter is typically greater than 85%.

Products supported

- HV9911NG-G

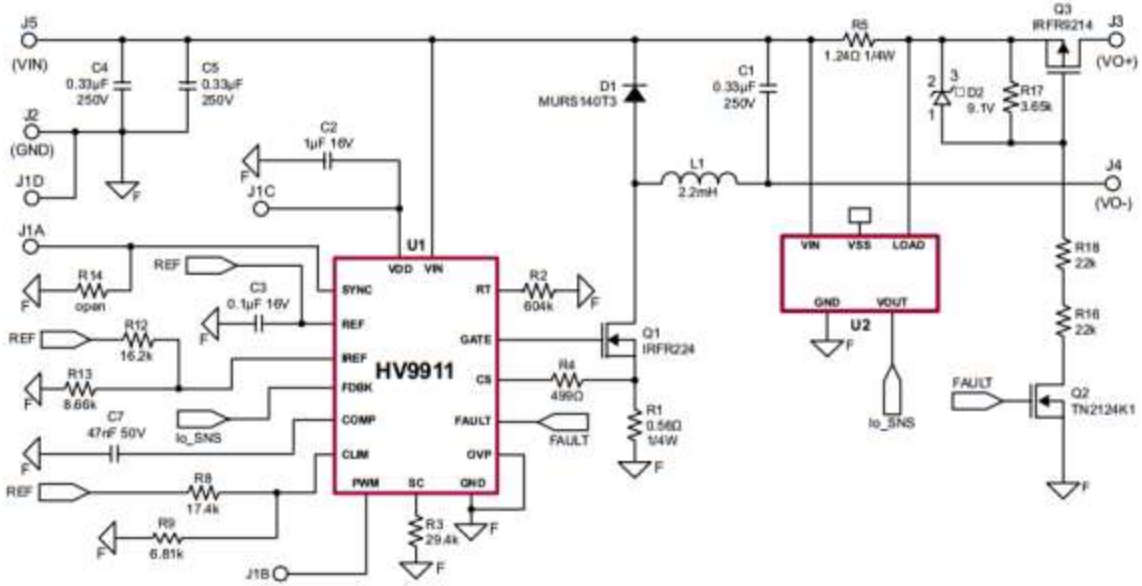

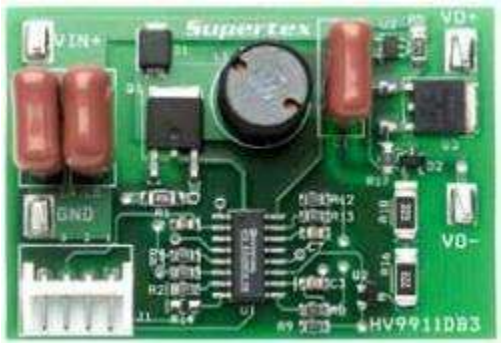

<< BACK

P/N: HV9911DB3

HV9911DB4 Demo Board

Online Info

The HV9911DB4 is an LED driver demoboard capable of driving one to six three-watt LEDs in series from an input of 9.0 - 16VDC. The demoboard uses HV9911 in a SEPIC topology to drive LED string voltages higher or lower than the input voltage. The converter has a very good initial regulation (+/-5%), and excellent line and load regulation over the entire input and output voltage range (<+/-1%). The full load efficiency of the converter is typically greater than 85%.

Products supported

- HV9911NG-G

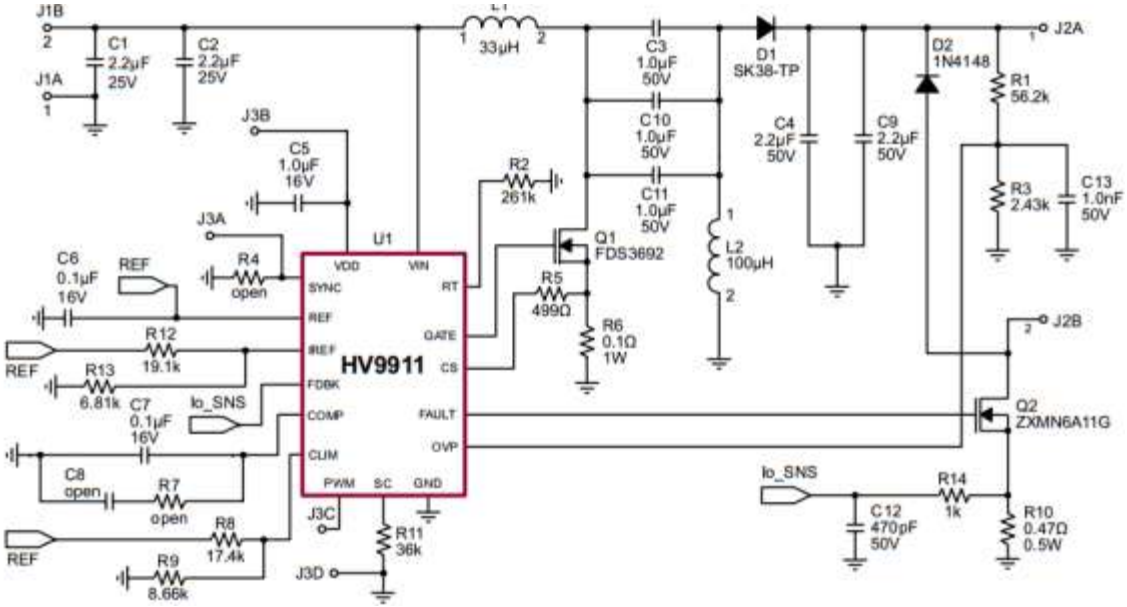

<< BACK

P/N: HV9911DB4

HV9912DB1 Demo Board

Online Info

The HV9912DB1 is an LED driver demoboard capable of driving up to 20 one-watt LEDs in series from an input of 21 - 27VDC. It uses the HV9912 in a boost topology. The converter has very good initial regulation (+/-5%) and excellent line and load regulation over the entire input and output voltage range (<+/- 1%). The full load efficiency of the converter is typically greater than 90%.

Products supported

- HV9912NG-G

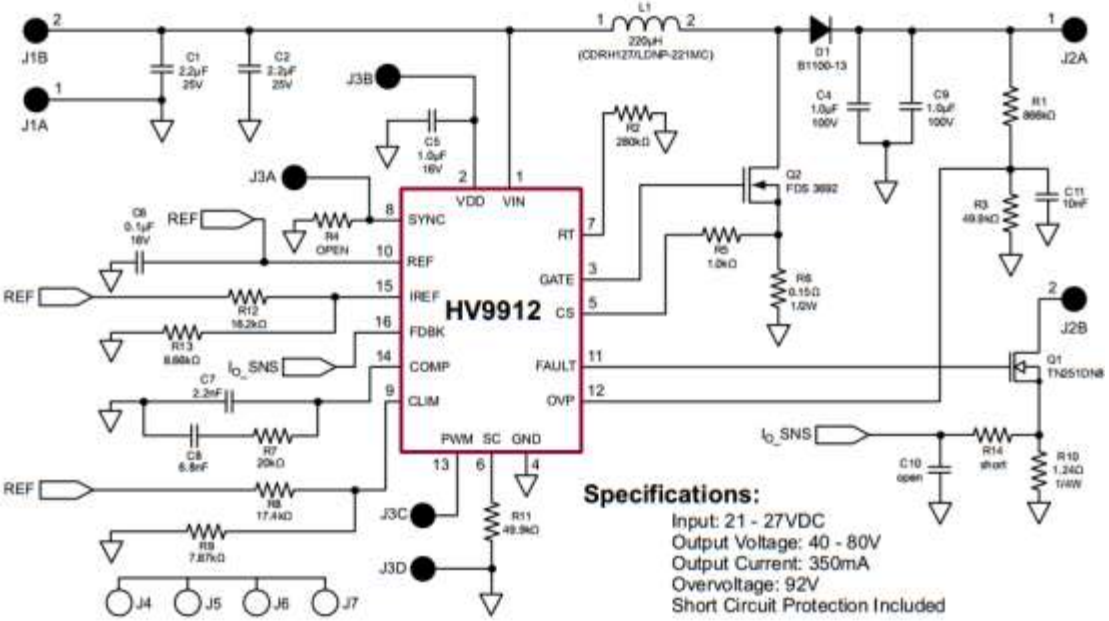

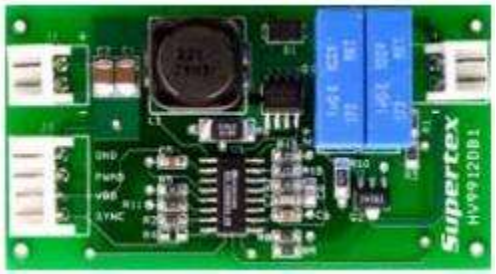

<< BACK

P/N: HV9912DB1

HV9961DB1 Demo Board

Online Info

The HV9961 demoboard is a high-brightness LED driver employing the patent-pending average-mode constant current control scheme. The power conversion stage of the HV9961DB1 consists of a diode bridge rectifier followed by a buck converter operating with fixed off-time of 20µs. The HV9961DB1 LED driver features tight regulation of the LED current within a few milliamps over the entire range of the input AC line and the output LED string voltage

Products supported

- HV9961NG-G

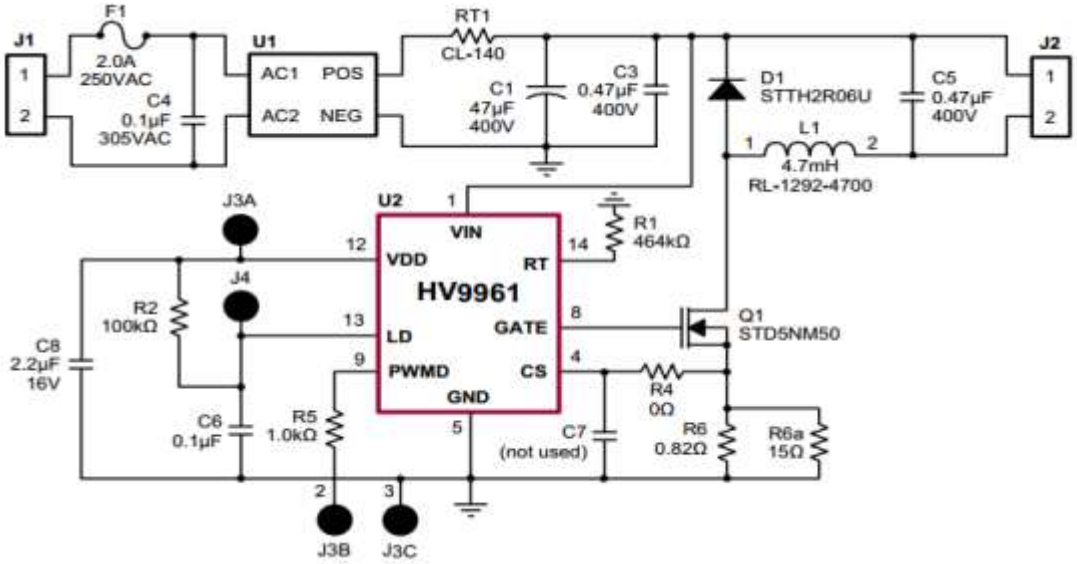

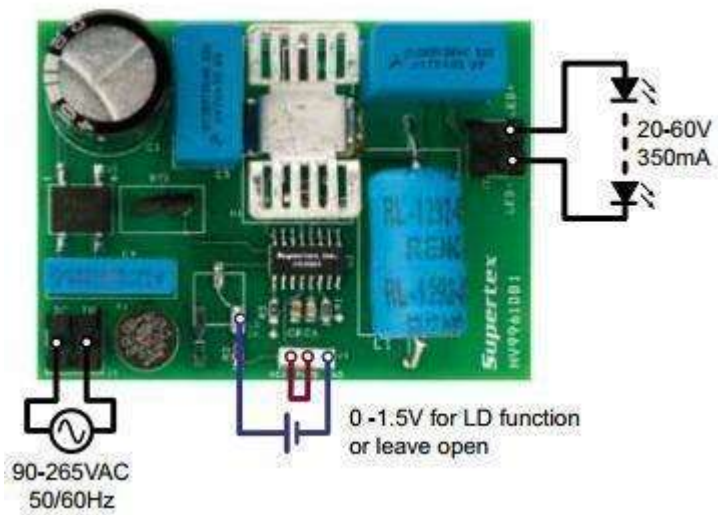

<< BACK

P/N: HV9961DB1

HV9980DB1 Demo Board

Online Info

The HV9980B1 demoboard is an RGB or multi-channel white LED backlight driver designed to drive LEDs for a large-screen TV. The HV9980DB1 can drive three common-anode LED strings from a 100 - 140V input at currents up to 70mA in steady state. It can also drive the LEDs at currents as large as 160mA for short durations to facilitate backlight scanning mode.

Products supported

- HV9980WG-G

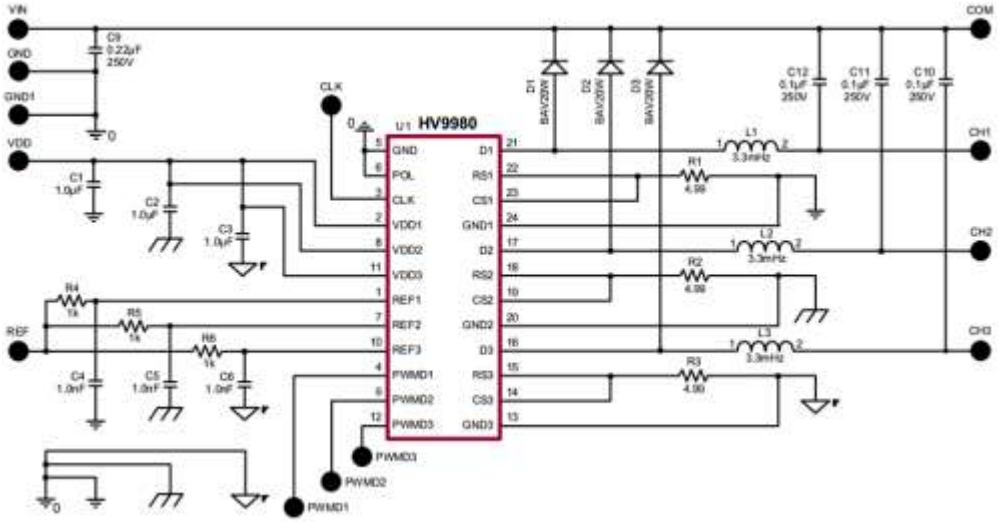

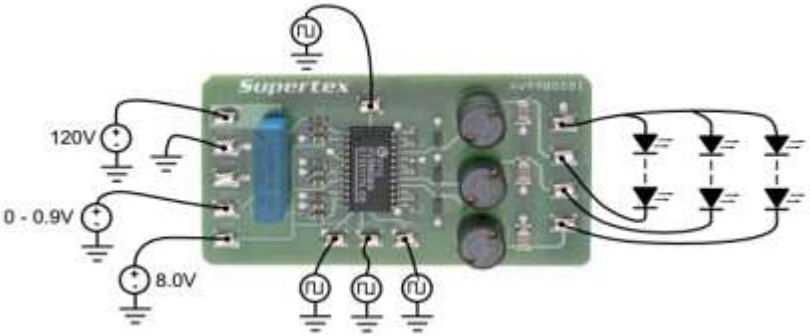

<< BACK

P/N: HV9980DB1

HV9967BDB1 Demo Board

Online Info

The HV9967BDB1 demoboard is a high-brightness LED driver designed to drive 4 LEDs in series at currents up to 350mA from a 20 - 60V DC input. The demoboard uses the HV9967B in a buck configuration in a constant off-time mode. The HV9967BDB1 LED driver features tight regulation of the LED current within a few milliamps over the entire range of the input voltage (i.e. 20 - 60VDC). The LED current accuracy is almost insensitive to the passive component tolerances, such as the inductance or the timing resistor

Products supported

- HV9967BMG-G

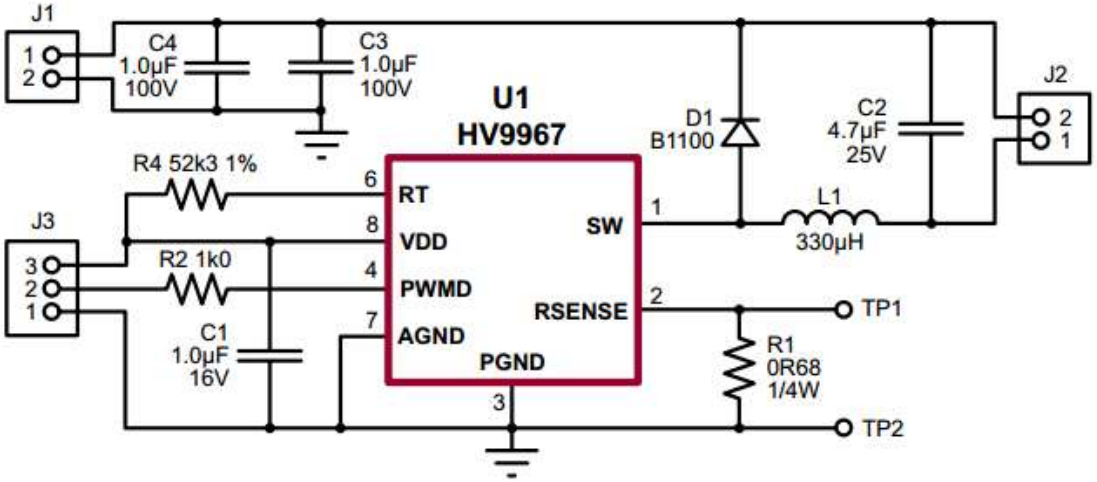

<< BACK

P/N: HV9967BDB1

HV9805 230V Boost Evaluation Board

Online Info

Products supported

- HV9805MG-G

The HV9805 230V_{AC} Off-Line LED Driver Evaluation Board is used to evaluate and demonstrate Microchip Technology Inc.'s HV9805 device in the following topology:

- 420-430V output Boost Converter application followed by a LED-side linear current regulator, supplied from the mains 230V_{AC}, to drive a 130-150 LED string.

The HV9805 230V_{AC} Off-Line LED Driver Evaluation Board was developed to help engineers reduce the product design cycle time.

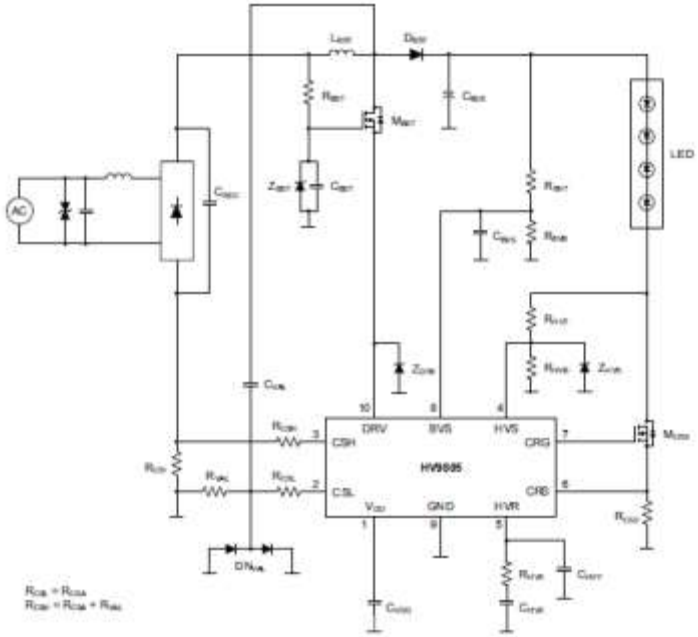

<< BACK

P/N: ADM00657

HV9805 230V SEPIC Evaluation Board

Online Info

The HV9805 230V_{AC} SEPIC Evaluation Board is used to evaluate and demonstrate Microchip Technology Inc.'s HV9805 device in the following topology:
The HV9805 230V_{AC} SEPIC Evaluation Board is suited for driving a 125V/100 mA LED load from a 230VAC source.
The Single-ended primary-inductor converter (SEPIC) configuration extends the application range of the HV9805 driver Integrated Circuit (IC) to lower LED load voltages than otherwise possible with the boost configuration. Many features of the boost configuration are retained, such as a true direct current drive of the LED load, high input power factor, high efficiency and simple magnetics.

Products supported

- HV9805MG-G

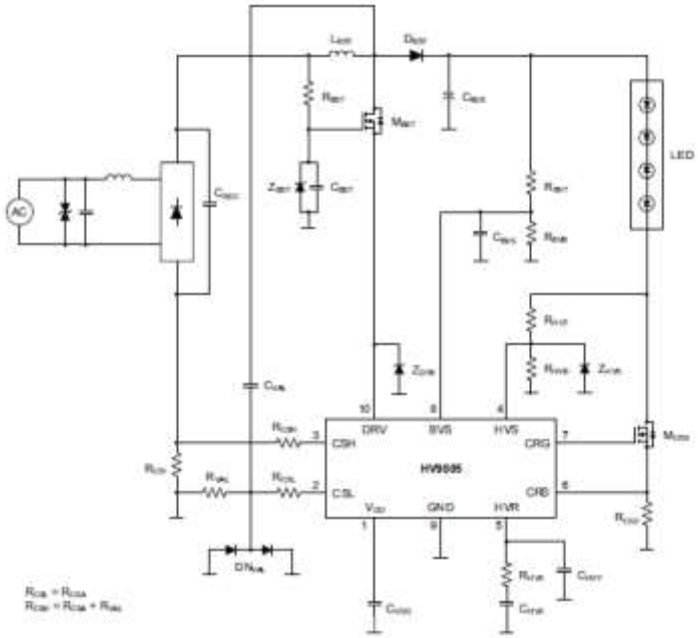

<< BACK

P/N: ADM00656

HV9805 120V Boost Evaluation Board

Online Info

Products supported

- HV9805MG-G

The HV9805 120V_{AC} Off-Line LED Driver Evaluation Board is used to evaluate and demonstrate Microchip Technology Inc.'s HV9805 device in the following topology:

- 215-265V output Boost Converter application followed by a LED-side linear current regulator, supplied from the mains 120V_{AC}, to drive a 70-90 LED string.

The HV9805 120V_{AC} Off-Line LED Driver Evaluation Board was developed to help engineers reduce the product design cycle time.

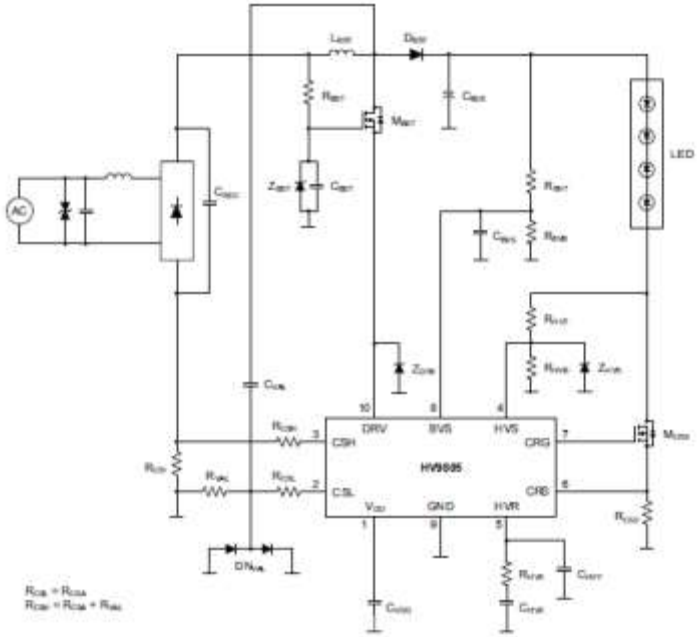

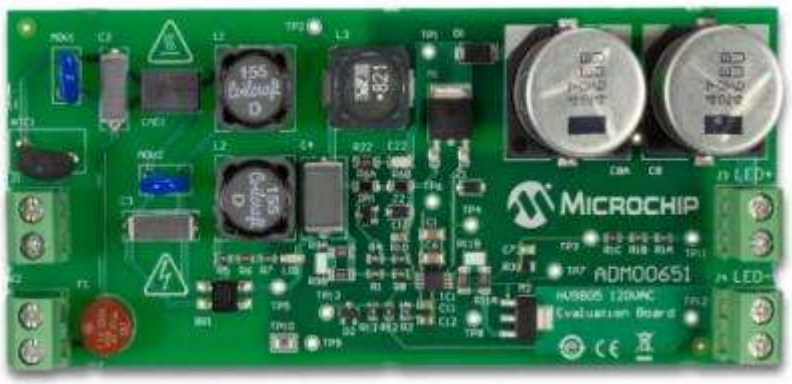

<< BACK

P/N: ADM00651

HV98100/101 Buck-Boost Evaluation Board

Online Info

The HV98100/101 Off-Line LED Driver Evaluation Board is used to evaluate and demonstrate Microchip Technology Inc.'s HV98100/101 device in the following topology:

- HV98100: Buck-Boost Converter application, supplied from the mains $120V_{AC}$, to drive an 92-133V LED load
- HV98101: Buck-Boost Converter application, supplied from the mains $230V_{AC}$, to drive an 88-122V LED load

The HV98100/101 Off-Line LED Driver Evaluation Board was developed to help engineers reduce product design cycle time.

Products supported

- HV98100T-E/CH
- HV98101T-E/CH

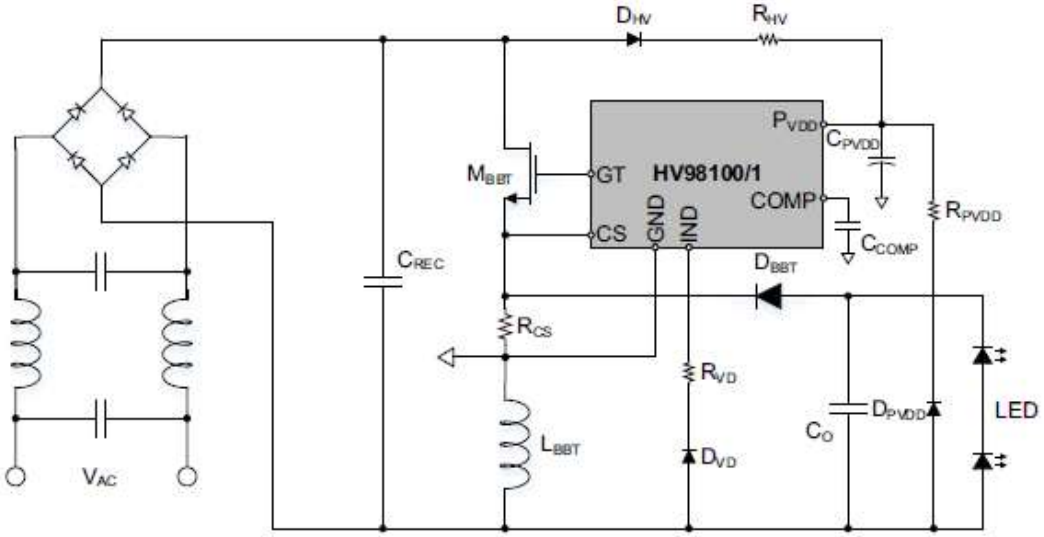

<< BACK

P/N: ADM00785, ADM00786

MIC3202 Evaluation Board

Online Info

The MIC3202 is a hysteretic, step-down, constant-current, High-Brightness LED (HB LED) driver. It provides an ideal solution for interior/exterior lighting, architectural and ambient lighting, LED bulbs, and other general illumination applications.

The MIC3202 is well suited for lighting applications requiring a wide-input voltage range. The hysteretic control gives good supply rejection and fast response during load transients and PWM dimming. The high-side current sensing and on-chip current-sense amplifier delivers LED current with ±5% accuracy. An external high-side current-sense resistor is used to set the output current.

Products supported

- MIC3202

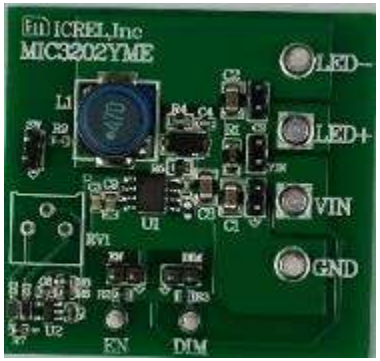

P/N: MIC3202YME-EV

<< BACK

MIC3203 Evaluation Board

Online Info

The MIC3203 is a hysteretic, step-down, constant-current, High-Brightness LED (HB LED) driver. It provides an ideal solution for interior/exterior lighting, architectural and ambient lighting, LED bulbs, and other general illumination applications.

The MIC3203 is well suited for lighting applications requiring a wide-input voltage range. The hysteretic control gives good supply rejection and fast response during load transients and PWM dimming. The high-side current sensing and on-chip current-sense amplifier delivers LED current with ±5% accuracy. An external high-side current-sense resistor is used to set the output current.

The MIC3203 offers a dedicated PWM input (DIM) which enables a wide range of pulsed dimming. A high-frequency switching operation up to 1.5MHz allows the use of smaller external components minimizing space and cost. The MIC3203 offers frequency dither feature for EMI control.

Products supported

- MIC3203

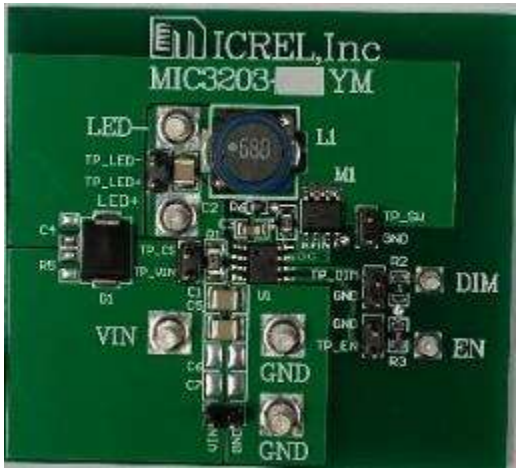

P/N: MIC3203YM-EV

<< BACK

MIC3223 Evaluation Board

Online Info

The MIC3223 is a constant current boost LED driver capable of driving a series string of high power LEDs. The MIC3223 can be used in general lighting, bulb replacement, garden pathway lighting, and other solid state illumination application.

The MIC3223 is a peak current mode control PWM boost regulator and the 4.5V and 20V operating input voltage range allows multiple applications from a 5V or a 12V bus.

The MIC3223 implements a fixed internal 1MHz switching frequency to allow for a reduction in the design footprint size. Power consumption has been minimized through the implementation of a 200mV feedback voltage that provides an accuracy of ±5%. The MIC3223 can be dimmed through the use of a PWM signal and features an enable pin for a low power shutdown state.

Products supported

- MIC3223

<< BACK

P/N: MIC3223TE-BOOST-EV

MIC3231 Evaluation Board

Online Info

The MIC3231 is a constant current boost switching controller specifically designed to power one or more strings of high power LEDs. The MIC3231 has an input voltage range from 6V to 45V and are ideal for a variety of solid state lighting applications.

The MIC3231 utilizes an external power device which offers a cost conscious solution for high power LED applications. The powerful drive circuitry can deliver up to 70W to the LED system. Power consumption has been minimized through the implementation of a 250mV feedback voltage reference providing an accuracy of ±3%. The MIC323x family is dimmable via a pulse width modulated (PWM) input signal and also features an enable pin for low power shutdown.

Products supported

- MIC3231

P/N: MIC3231TE-Sepic-EV

<< BACK

MIC3263 Evaluation Board

Online Info

The MIC3263 is a high-efficiency pulse-width modulation (PWM) boost switching regulator that is optimized for constant-current WLED driver backlighting applications. The MIC3263 drives six channels of up to ten WLEDs per channel. Each channel is matched in current to within ±3% for constant brightness across the screen and can be programmed from 15mA to 30mA.

The MIC3263 provides a very flexible dimming control scheme with better accuracy and noise immunity. The dimming frequency can be set to any value between 100Hz and 20kHz by an external resistor. The dimming ratio is determined by the duty cycle of a dimming ratio control input signal and can be set to one of 16 levels with a minimum ratio of 1%.The LED dimming current is set by an external resistor to allow programming of LED current between 15mA and 30mA.

Products supported

- MIC3263

P/N: MIC3263YML-EV

<< BACK

MIC4801 Evaluation Board

Online Info

The MIC4801 is a high efficiency White LED (WLED) driver designed to drive a single LED up to 600mA. The MIC4801 constant current driver is designed to drive high power LEDs in various lighting applications. The MIC4801 provides the highest possible efficiency as this architecture has no switching losses present in traditional charge pumps or inductive boost circuits. It features a typical dropout of 130mV at 400mA. This allows the LEDs to be driven directly from the voltage source eliminating switching noise/losses present with the use of boost circuitry. The high accuracy (±1% typical) current regulated WLED channel helps ensure uniform display illumination under all conditions. The brightness is controlled through an Ultra Fast PWM™ Control interface operating down to less than 1% duty cycle.

Products supported

- MIC4801

P/N: MIC4801YM-EV

<< BACK

MIC4802 Evaluation Board

Online Info

The MIC4802 is a high efficiency White LED (WLED) driver designed to drive a single LED up to 800mA. The MIC4802 constant current driver is designed to drive high power LEDs in various lighting applications. The MIC4802 provides the highest possible efficiency as this architecture has no switching losses present in traditional charge pumps or inductive boost circuits. It features a typical dropout of 280mV at 800mA. This allows the LEDs to be driven directly from the voltage source eliminating switching noise/losses present with the use of boost circuitry. The high accuracy (±1% typical) current regulated WLED channel helps ensure uniform display illumination under all conditions. The brightness is controlled through an Ultra Fast PWM™ Control interface operating down to less than 1% duty cycle.

Products supported

- MIC4802

P/N: MIC4802YM-EV

<< BACK

MIC4811 Evaluation Board

Online Info

The MIC4811 is a high efficiency linear White LED (WLED) driver designed to drive up to six high current WLEDs for signage lighting. The MIC4811 provides the highest possible efficiency as this architecture has no switching losses present in traditional charge pumps or inductive boost circuits. The MIC4811 provides six linear drivers which maintain constant current for up to six WLEDs. It features a typical dropout of 100mV at 50mA.

The MIC4811 features Dynamic Average Matching™ (DAM™) which is specifically designed to provide optimum matching across all WLEDs. The high accuracy (±1% typical) current regulated WLED channels ensure uniform display illumination under all conditions. The brightness is controlled through an Ultra Fast PWM™ interface operating down to less than 1% duty cycle.

Products supported

- MIC4811

P/N: MIC4811YMM-EV

<< BACK

MIC4812 Evaluation Board

Online Info

The MIC4812 is a high efficiency linear White LED (WLED) driver designed to drive up to six high current WLEDs for signage lighting. The MIC4812 provides the highest possible efficiency as this architecture has no switching losses present in traditional charge pumps or inductive boost circuits. The MIC4812 provides six linear drivers which maintain constant current for up to six WLEDs. It features a typical dropout of 190mV at 100mA.

The MIC4812 features Dynamic Average Matching™ (DAM™) which is specifically designed to provide optimum matching across all WLEDs. The high accuracy (±1% typical) current regulated WLED channels ensure uniform display illumination under all conditions. The brightness is controlled through an Ultra Fast PWM™ interface operating down to less than 1% duty cycle.

Products supported

- MIC4812

P/N: MIC4812YMME-EV

<< BACK

MAQ3203 Evaluation Board

Online Info

The MAQ3203 is a hysteretic, step-down, constantcurrent, High-Brightness LED (HB LED) driver. It provides an ideal solution for interior/exterior lighting, architectural and ambient lighting, LED bulbs, and other general illumination applications.

The MAQ3203 is well suited for lighting applications requiring a wide-input voltage range. The hysteretic control gives good supply rejection and fast response during load transients and PWM dimming. The high-side current sensing and on-chip current-sense amplifier delivers LED current with ±5% accuracy. An external high-side currentsense resistor is used to set the output current.

Products supported

- MAQ3203

P/N: MAQ3203YM-EV

<< BACK

MIC2298 Evaluation Board

Online Info

This board enables the evaluation of the MIC2298, a fully integrated 7W net output minimum high power white LED driver. The board includes components necessary to set the LED current to 20%, 50% and 100% of the nominal LED current (1A). The external inputs also allow the LED current to be programmed either with additional resistors or voltages on the DIM or BRT pins. Also the enable pin can be driven to force the part into low Iq mode.

Products supported

- MIC2298

P/N: MIC2298-15YML-EV

<< BACK

MIC2299 Evaluation Board

Online Info

This board enables the evaluation of the 3.5A switch, high power white LED driver MIC2299. The board includes components necessary to set the LED current to 20%, 50%, and 100% of the nominal LED current (1A).

The evaluation board includes a push button switch which sends a one shot pulse of 300ms to the enable pin to prevent overheating when testing high power LEDs. Also the enable pin can be driven to force the part into low Iq mode.

Products supported

- MIC2299

P/N: MIC2299-15YML-EV

<< BACK

MIC2297 Evaluation Board

Online Info

The MIC2297 is a 600kHz PWM White LED Driver optimized for 6 to 10 series WLEDs. With an output voltage of up to 42V and a guaranteed 1.2A on the internal power switch, the MIC2297 can easily drive 10WLEDs at 20mA continuous current. The MIC2297 features WLED brightness control using the BRT pin and has output over voltage protection (OVP) to protect the device in case the WLEDs are disconnected unexpectedly.

Products supported

- MIC2297

P/N: MIC2297-42YML-EV

<< BACK

MIC2870 Evaluation Board

Online Info

The MIC2870 is a high-current, high-efficiency flash LED driver for one or two high-brightness camera flash LEDs.
The LED driver current is generated by an integrated inductive boost converter with 2MHz switching frequency which allows the use of a very-small inductor and output capacitor. These features make the MIC2870 an ideal solution for high-resolution camera phone LED flashlight driver applications.

MIC2870 supports two 750mA white-LEDs (WLEDs) or a single 1.5A WLED configuration. When two WLEDs are connected, their currents are matched automatically.

MIC2870 operates in either flash or torch modes that can be controlled through either an I^2C interface or external pins. The brightness in the flash and torch mode can be adjusted via two external resistors individually. High-speed mode I^2C interface provides a simple control at a clock speed up to 3.4MHz to support most camera functions such as auto-focus, white balance, and image capture (flash mode).

Products supported

- MIC2870

P/N: MIC2870YFT-EV

<< BACK

MIC2874 Evaluation Board

Online Info

The MIC2874 is a high-current, high-efficiency flash LED driver. The LED driver current is generated by an integrated inductive boost converter with a 4MHz switching frequency which allows for the use of very small inductor and output capacitor. These features make the MIC2874 an ideal solution for high-resolution camera phone LED flash light driver applications.

MIC2874 operates in either flash or torch modes that can be controlled through the single-wire serial interface and/or external control pin. A robust single-wire serial interface allows the host processor to control the LED current and brightness.

Products supported

- MIC2874

P/N: MIC2874YCS-EV

<< BACK

CL88020 120V_{AC} Offline LED Driver Eval Board

Online Datasheet

The CL88020 120V_{AC} Offline LED Driver Evaluation Board is a complete solution consisting of an LED Driver (ADM00766) and an LED Load Board (ADM00767) powered directly from the 120V_{AC} line.

Products supported:

- CL88020T-E/SE

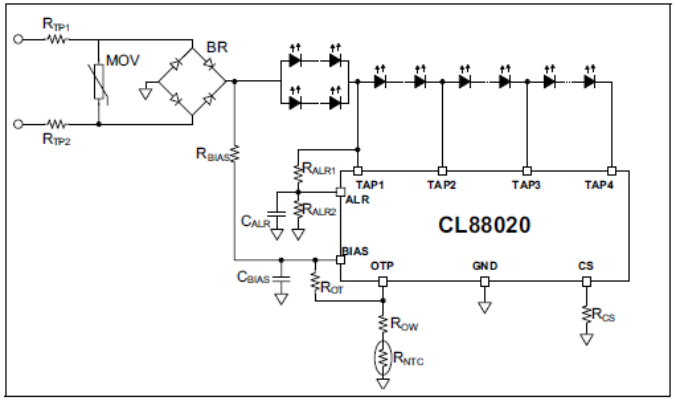

Features:

- CL88020 LED Driver Evaluation Board (ADM00766):
  - Input Voltage: 120V_{rms} +/-15%, 50/60 Hz
  - Typical Output Capability: up to 130mA
  - Efficiency: Over 83%
  - Max Output Power: 8.5W

- CL88020 LED Driver Load Board (ADM00767):
  - 10 LEDs (GW P9LR31.EM) (4-tap groups)
  - An 8-wire Flat Cable Input Connector
  - One NTC For Over-temperature Protection

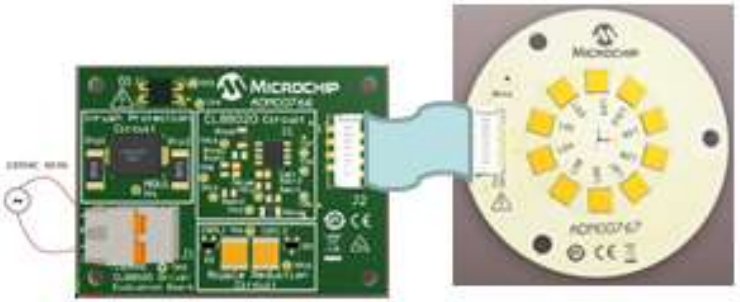

AT9919DB1 Demo Board

Online Info

The AT9919BDB1 demoboard is a high current LED driver designed to drive one LED at 1.0A from a 9.0 - 16VDC input. AT9919DB1 includes two PWM dimming modes. The analog control of the PWM dimming mode allows the user to dim the LED using a 0 - 2.0V analog signal applied between the ADIM and GND pins (0V gives 0% and 2.0V gives 100%). In this mode, the PWM dimming frequency is set to 1kHz on the board. The digital control of PWM dimming mode allows the user to dim the LEDs using an external, TTL-compatible square wave source applied between DIM and GND. In this case, the PWM dimming frequency and duty ratio are set by the external square wave source.

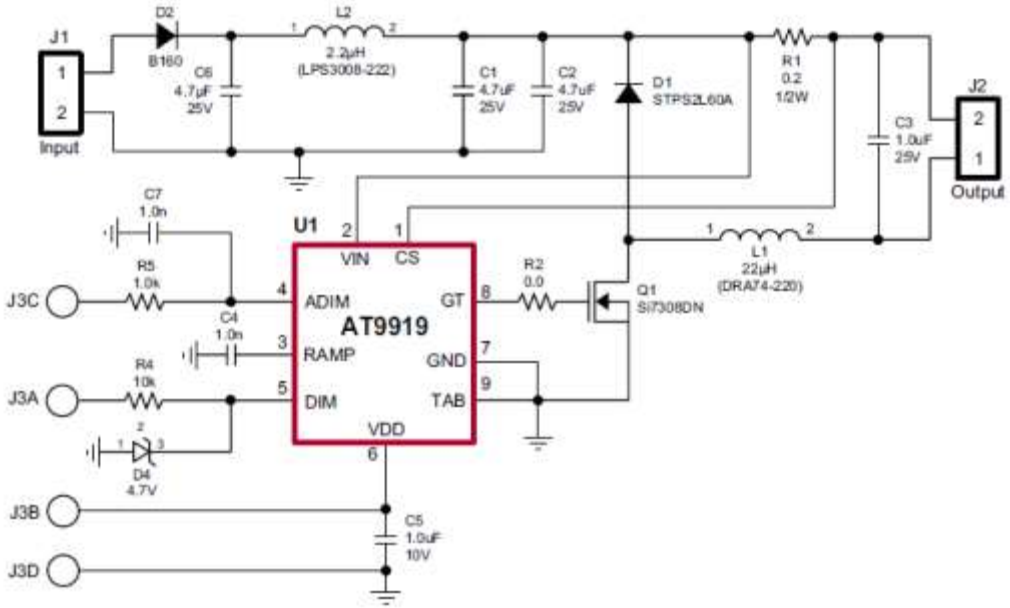

Products supported

- AT9919K7-G

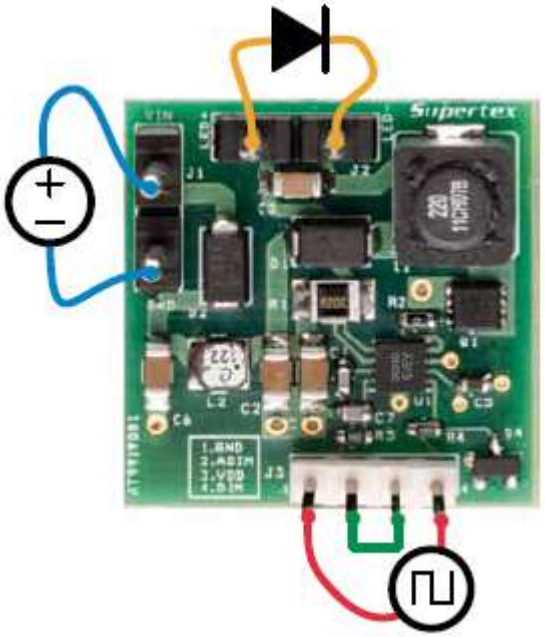

<< BACK

P/N: AT9919DB1

AT9933DB1 Demo Board

Online Info

The AT9933DB1 is an LED driver capable of driving up to 7 1-watt LEDs in series from an automotive input of 9 - 16V DC. The demoboard uses AT9933LG-G in a boost-buck topology. The converter operates at frequencies in excess of 300kHz and has excellent output current regulation over the input voltage range. It can also withstand transients up to 42V and operate down to 6V input. The converter is also protected against open LED and output short circuit conditions. Protection against reverse polarity up to 20V is also included.

Products supported

- AT9933LG-G

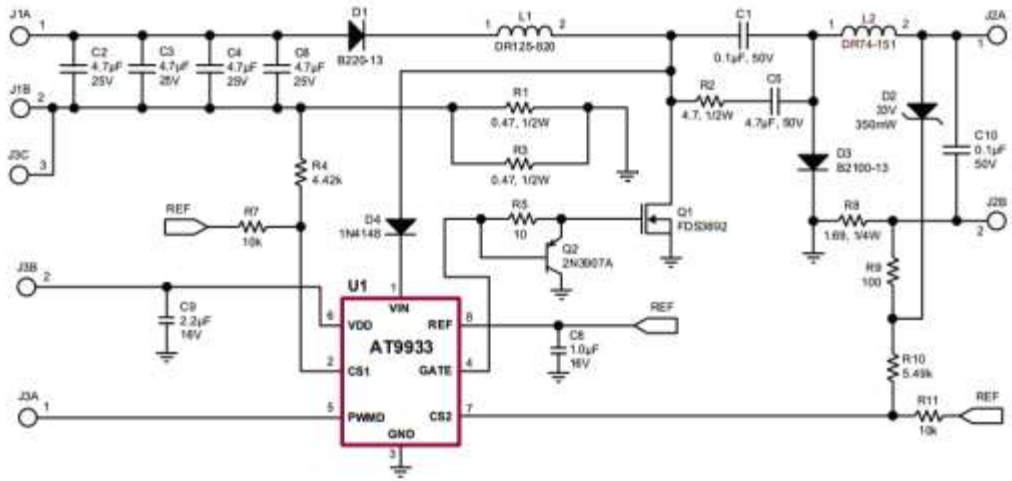

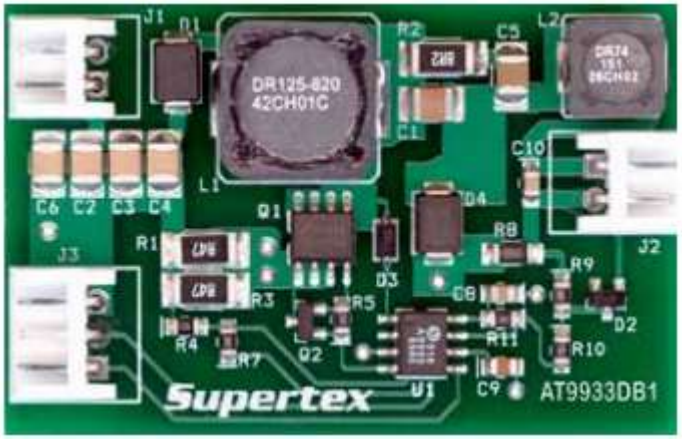

<< BACK

P/N: AT9933DB1

HV816DB2 Demo Board

Online Info

The HV816DB2 is a high brightness demoboard with the circuitry to drive a 10in2 EL lamp using the HV816 in a 4x4 QFN-16 package.

Products supported

- HV816K6-G

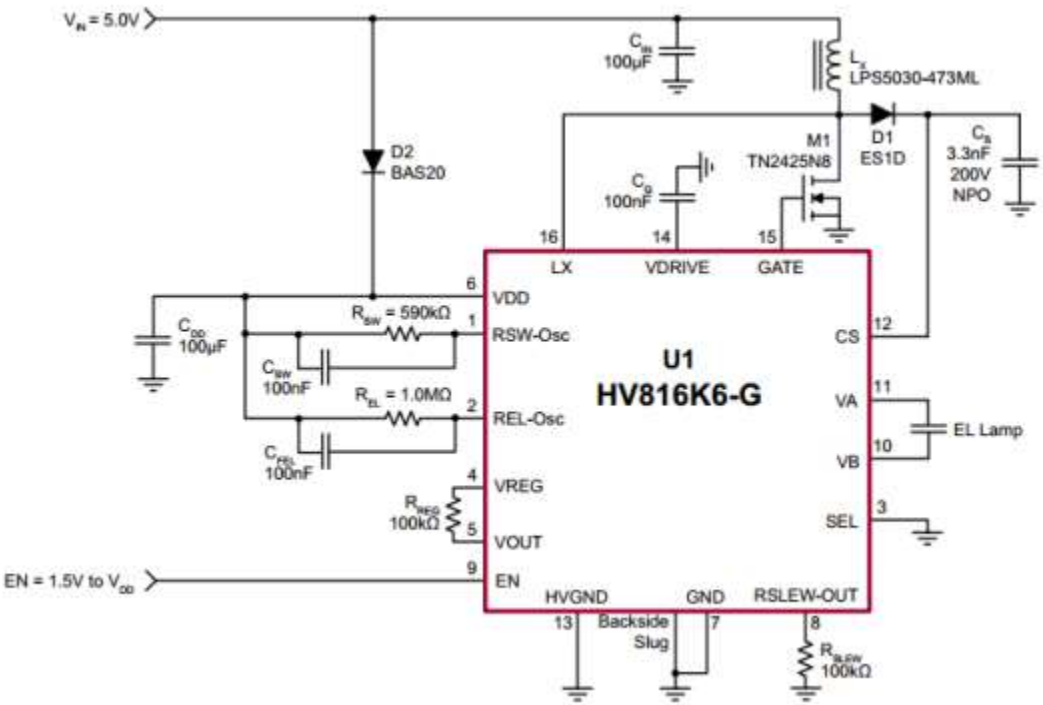

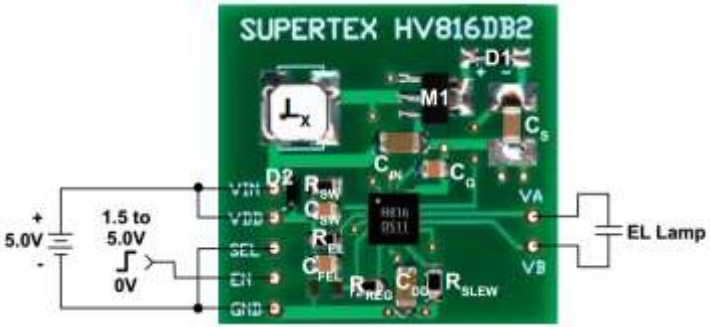

<< BACK

P/N: HV816DB2

HV816DB3 Demo Board

Online Info

The HV816DB3 is a demoboard designed for high power applications using the HV816 4x4 QFN-16 package. The HV816DB3 board has the circuitry to drive a 16.5in2 EL lamp. For applications requiring smaller lamps and/or lower power, please refer to the HV816DB2 demoboard datasheet.

Products supported

- HV816K6-G

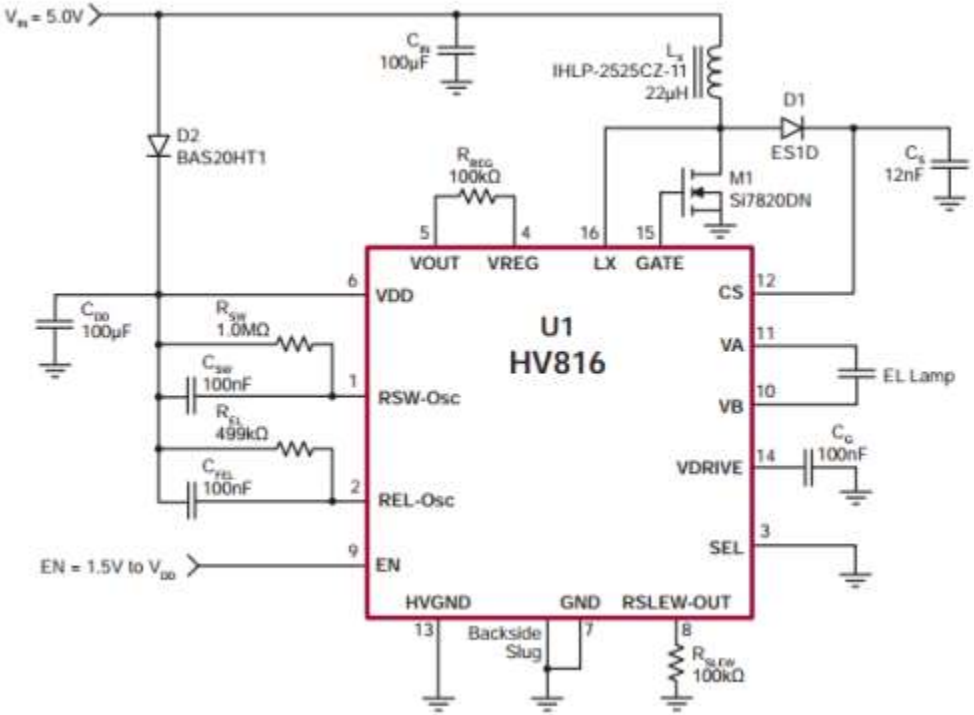

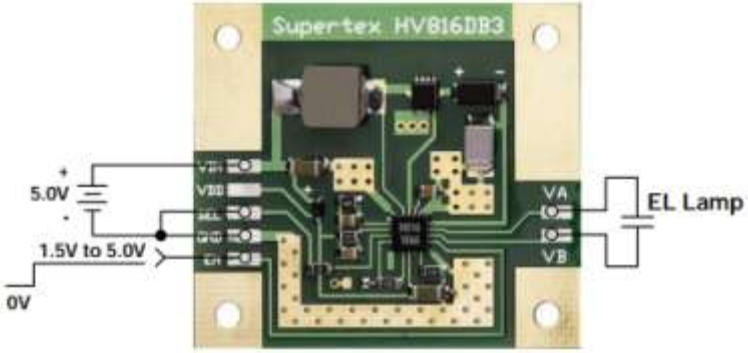

Top View

<< BACK

P/N: HV816DB3

HV823DB1 Demo Board

Online Info

The HV823DB1 EL Driver demoboard contains all the circuitry necessary to drive an EL (Electroluminescent) lamp. The supplied circuit has been optimized to drive an 8.0in2 lamp from a 3.0 to 3.3V supply. The circuit may be customized with different component values to suit a particular application.

Products supported

- HV823LG-G

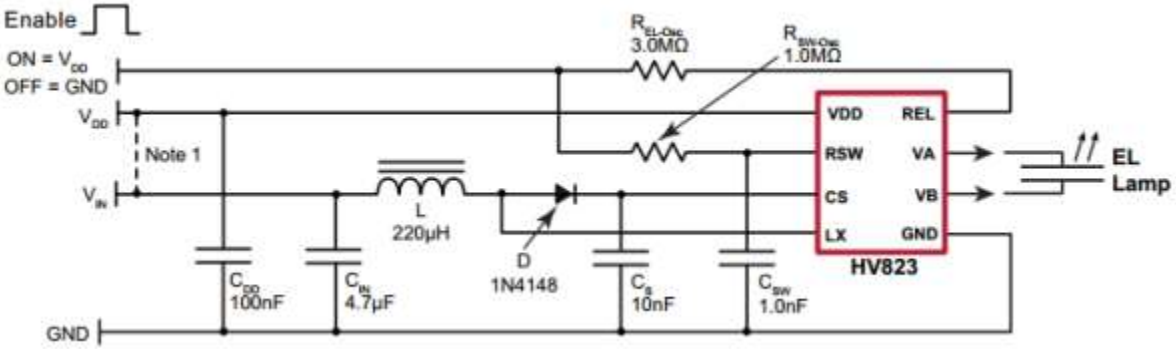

<< BACK

P/N: HV823DB1

HV825DB1 Demo Board

Online Info

The HV825DB1 EL Driver demoboard contains all the circuitry necessary to drive an EL (Electroluminescent) lamp. The supplied circuit has been optimized to drive a 1.5in2lamp from a 1.5V supply. The circuit may be customized with different component values to suit a particular application.

Products supported

- HV825

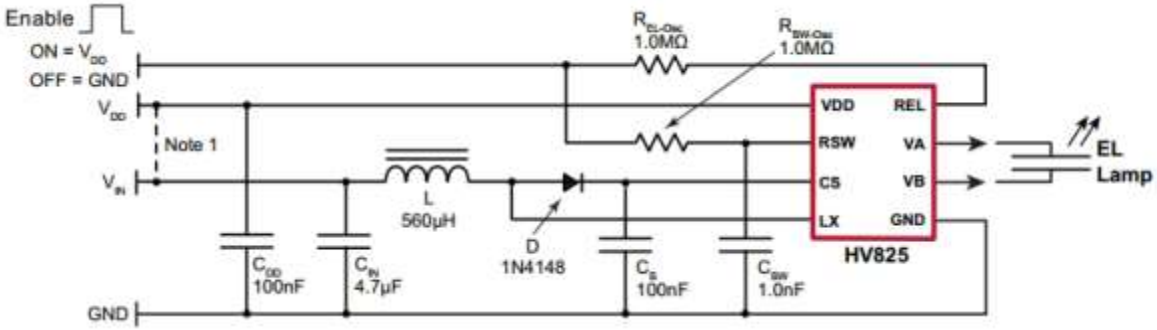

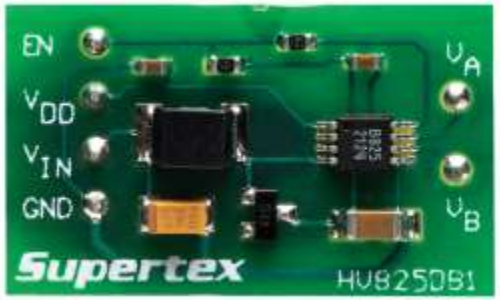

<< BACK

P/N: HV816DB2

HV830DB1 Demo Board

Online Info

The HV830DB1 EL Driver demoboard contains all the circuitry necessary to drive an EL (Electroluminescent) lamp. The supplied circuit has been optimized to drive an 8.0in2 lamp from a 3.0 to 3.3V supply. The circuit may be customized with different component values to suit a particular application.

Products supported

- HV830

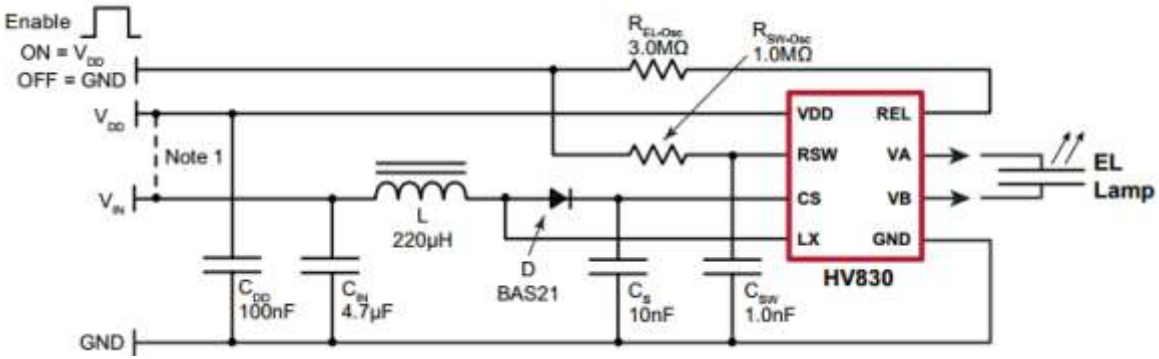

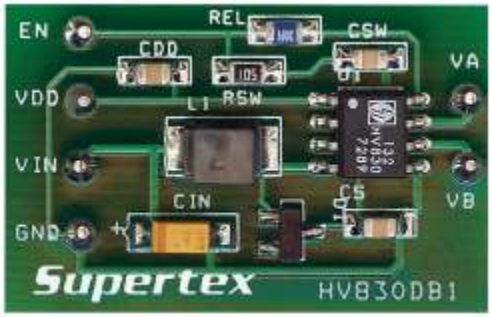

<< BACK

P/N: HV830DB1

HV833DB1 Demo Board

Online Info

The HV833DB1 demoboard contains all necessary circuitry to demonstrate the features of the HV833 EL lamp driver.

Products supported

- HV833

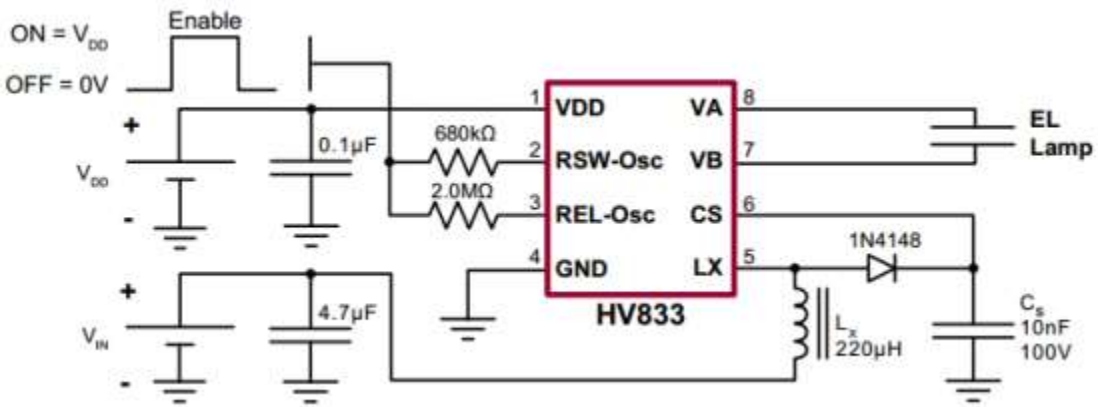

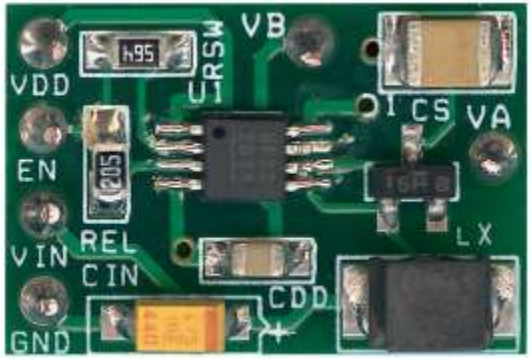

<< BACK

HV857DB1 Demo Board

Online Info

The HV857DB1 demoboard contains all necessary circuitry to demonstrate the features of the HV857 EL lamp driver.

Products supported

- HV857MG-G

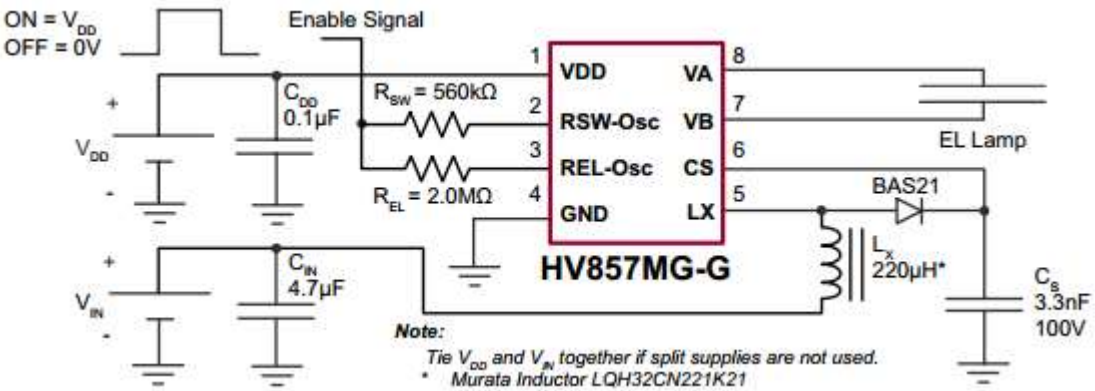

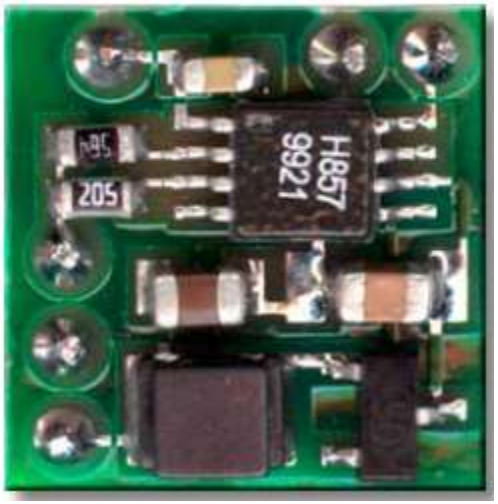

<< BACK

P/N: HV857DB1

HV857LDB1 Demo Board

Online Info

The HV857LDB1 demoboard contains all necessary circuitry to demonstrate the features of the HV857L EL lamp driver.

Products supported

- HV857LMG-G

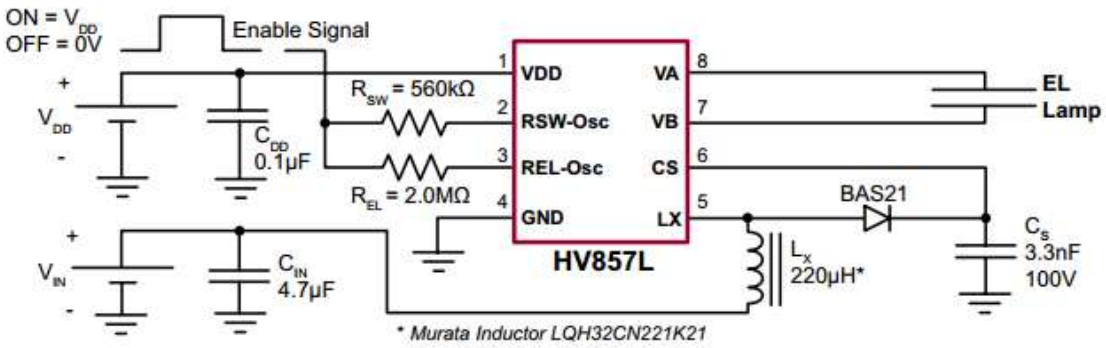

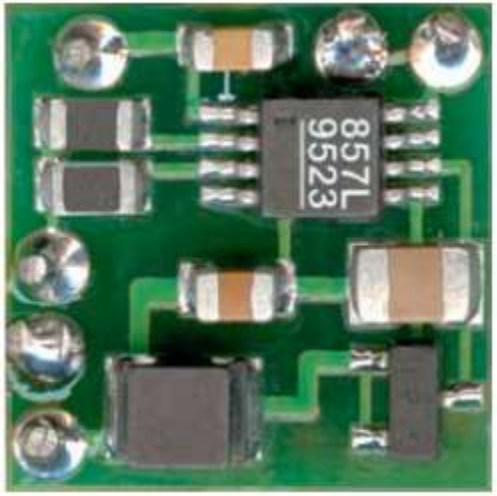

<< BACK

P/N: HV857LDB1

HV859DB1 Demo Board

Online Info

The HV859DB1 demoboard contains all the necessary circuitry needed to demonstrate the features of the HV859 EL lamp driver.

Products supported

- HV859MG-G

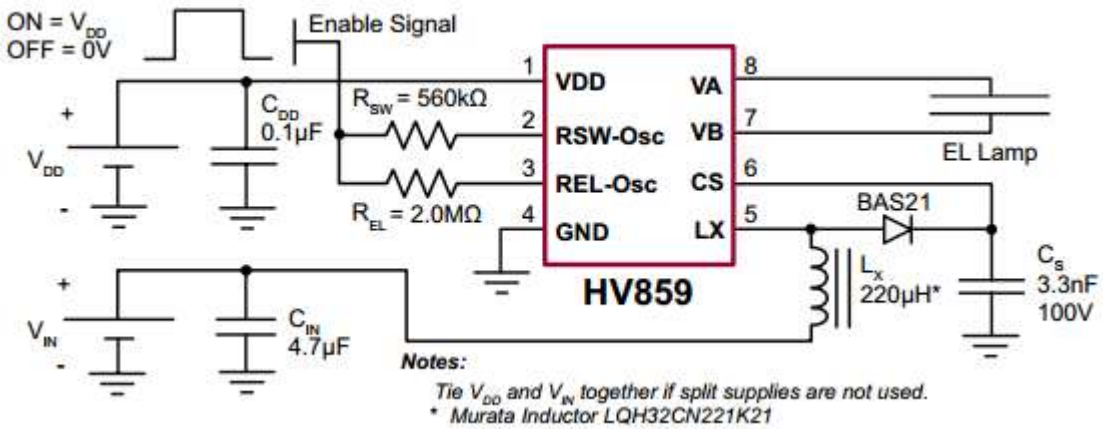

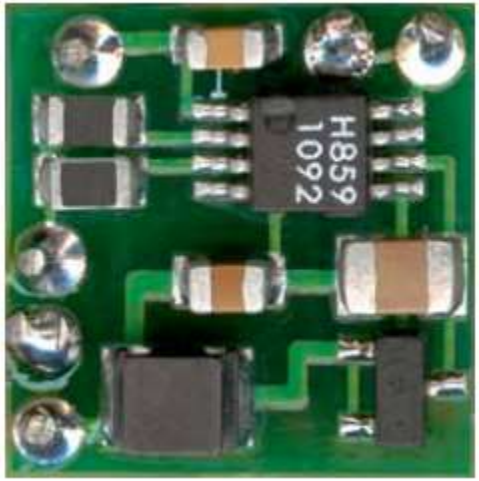

<< BACK

P/N: HV857DB1

HV860DB1 Demo Board

Online Info

The HV860DB1 demoboard contains all necessary circuitry to demonstrate the features of the HV860 EL lamp driver.

Products supported

- HV860K7-G

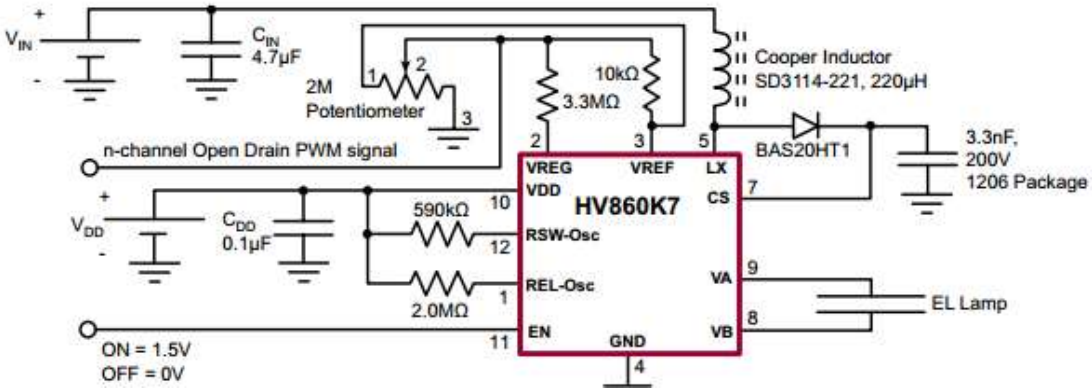

<< BACK

P/N: HV860DB1

MIC4830 Evaluation Board

Online Info

The MIC4830 is a low noise 180V_{PP} electroluminescent (EL) lamp driver. Using advanced Bipolar, CMOS, DMOS (BCD) technology, the MIC4830 integrates a high voltage boost converter and an H-bridge driver for driving a large EL lamp. The MIC4830 can drive large panel displays for mobile phones, MP3 players, or automotive electronics where EL panels are used for backlighting.

The MIC4830 offers design flexibility with adjustable lamp and boost converter frequencies, simply by applying external resistors. A new H-bridge design reduces audible noise by creating smoother AC voltage across the EL panel.

Products supported

- MIC4830

P/N: MIC4830YML-EV
MIC4830YMM-EV

<< BACK

MIC4832 Evaluation Board

Online Info

The MIC4832 is a low noise 220V_{PP} electroluminescent (EL) lamp driver. Using advanced Bipolar, CMOS, DMOS (BCD) technology, the MIC4832 integrates a high voltage boost converter and an H-bridge driver for driving a large EL lamp. The MIC4832 can drive large panel displays for mobile phones, MP3 players, or automotive electronics where EL panels are used for backlighting.

The MIC4832 offers design flexibility with adjustable lamp and boost converter frequencies, simply by applying external resistors. A new H-bridge design reduces audible noise by creating smoother AC voltage across the EL panel.

Products supported

- MIC4832

P/N: MIC4832YML-EV
MIC4832YMM-EV

<< BACK

MIC4833 Evaluation Board

Online Info

The MIC4833 is a low noise dual electroluminescent (EL) panel driver used in backlighting applications. The MIC4833 converts a low DC voltage to a high DC voltage using a boost converter and then alternates the high DC voltage across the EL panels using an H-bridge. The MIC4833 incorporates internal wave-shaping circuitry specifically designed to reduce audible noise emitted by EL panels. The two EL panels may be dimmed by applying a PWM signal to the device. The MIC4833 drives two outputs from a single inductor and requires a minimum number of passive components. It features an operating input voltage range of 2.3V to 5.8V, making it suitable for 1-cell Li-Ion and 2- or 3-cell alkaline/NiCad/NiMH battery applications.

Products supported

- MIC4833

P/N: MIC4833YML-EV

<< BACK

HV861DB1 Demo Board

Online Info

The HV861DB1 demoboard contains all the necessary circuitry to demonstrate the features of the HV861 dual EL Lamp driver

Products supported

- HV861K7-G

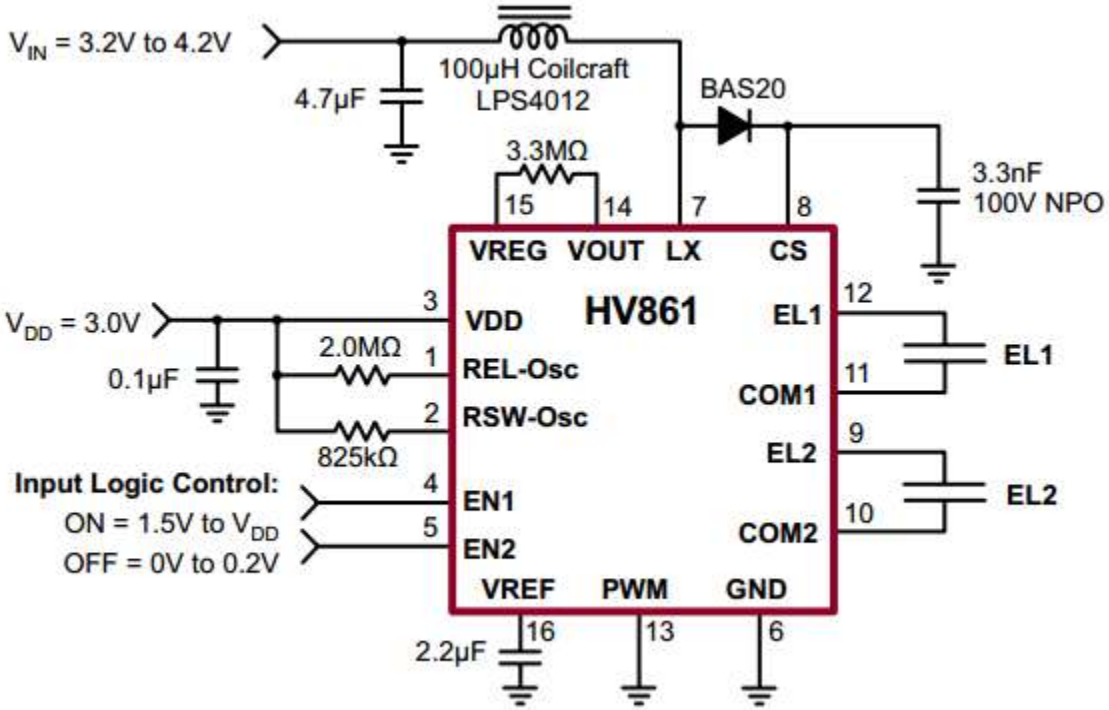

<< BACK

P/N: HV861DB1

HV852DB1 Demo Board

Online Info

The HV852DB1 demoboard contains all necessary circuitry to demonstrate the features of the HV852 EL lamp driver.

Products supported

- HV852K7-G

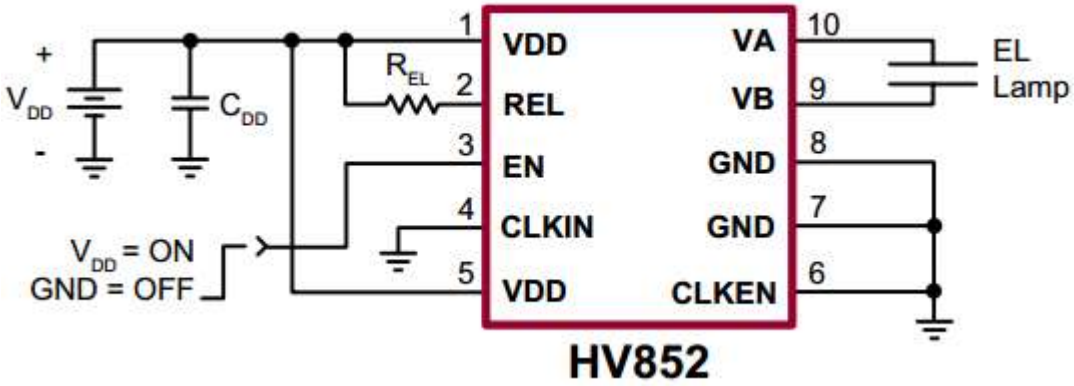

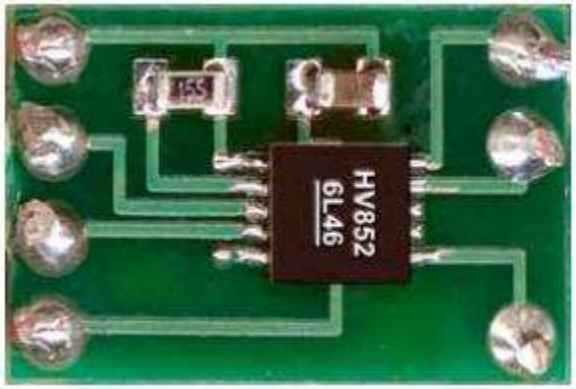

<< BACK

P/N: HV852DB1

HV853DB1 Demo Board

Online Info

The HV853DB1 demoboard contains all the necessary circuitry to demonstrate the features of the HV853 EL lamp driver. The HV853 is the low noise version of the EL driver HV852 with improved EMI performance.

Products supported

- HV853K7-G

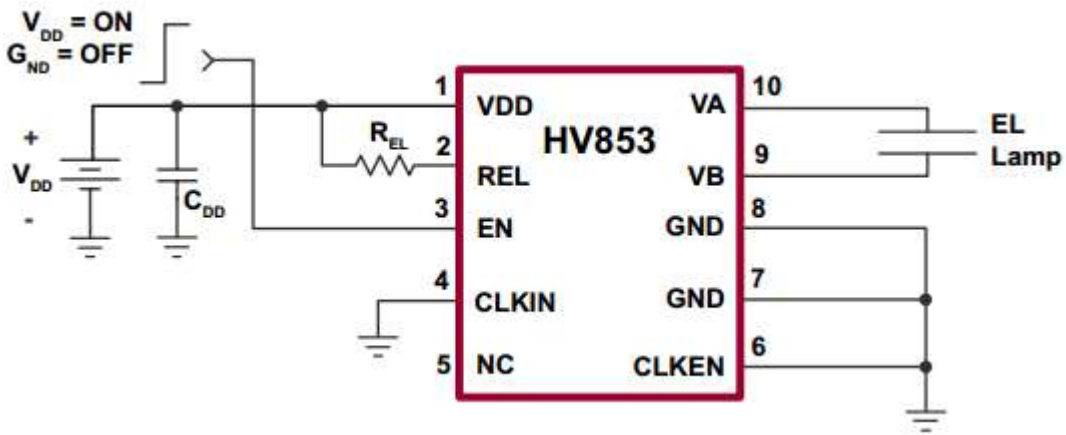

<< BACK

P/N: HV853DB1

HV809DB2 Demo Board

Online Info

The HV809DB2 EL Driver demoboard contains all the circuitry necessary to drive an EL (Electroluminescent) lamp.

Products supported

- HV809

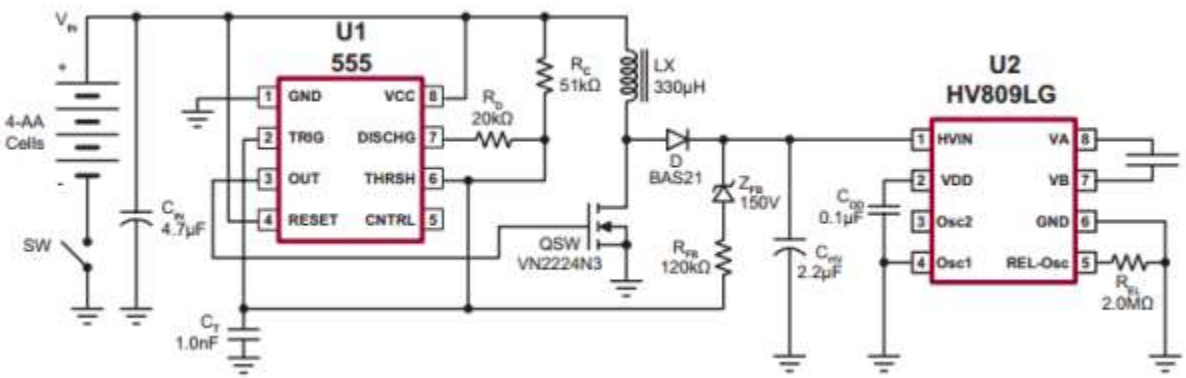

<< BACK

P/N: HV809DB2

Ethernet PHY (Transceiver) Eval Boards

Online Datasheet

EVB8742

PIC32 Ethernet Starter Kit II
(Part # DM320004-2)
with LAN8720A

KSZ8061MNX 32-QFN Evaluation Board
(Part # KSZ8061MNX-EVAL)

<< BACK

Ethernet Controller & EtherCAT Eval Boards

Online Datasheet

LAN9252
3-Port EtherCAT Slave Controller

EVB-LAN9252-3PORT

LAN9252
EtherCAT Slave Controller w/HBI

EVB-LAN9252-HBI

LAN9252
EtherCAT Slave Controller w/DIGI-IO

EVB-LAN9252-DIGIO

LAN9250
10/100 Ethernet Controller

EVB-LAN9250

KSZ8851
10/100 Ethernet Controller

ATETHERNET1-XPRO

KSZ8851SNL-EVAL

<< BACK

Ethernet Switch Eval Boards

Online Datasheet

LAN9303
3-Port Managed Ethernet Switch

EVB9303M

LAN9303 PHY Switch Daughter Board (Part # AC320004-4)

LAN935x
3-Port Ethernet Switch

EVB-LAN9355

KSZ9897/9477
7-Port Gigabit Ethernet Switches

KSZ9897-EVAL

KSZ9477-EVAL

<< BACK

Ethernet Bridge Eval Boards

Online Datasheet

LAN9500A USB 2.0 to 10/100 Ethernet Evaluation Boards

EVB-LAN9500A-LC

EVB-LAN9500A-MII

LAN9730 USB 2.0 HSIC to 10/100 Ethernet Evaluation Board

EVB-LAN9730-MII

LAN7500 USB 2.0 to 10/100/1000 Ethernet Evaluation Boards

EVB-LAN7500-LC

EVB-LAN7500

LAN7800 USB 3.1 Gen1 to 10/100/1000 Ethernet Evaluation Boards

EVB-LAN7800

EVB-LAN7800LC

LAN951x USB 2.0 to 10/100 Ethernet Hub Evaluation Boards

EVB9514

EVB9512

<< BACK

EQCO-FastECoax-7501.2 Ethernet over Coax Adapters

Online Info

Microchip's Ethernet over coax adapters uniquely provide Power over Ethernet (PoE) bridging over the coax link to provide ample power (PoC) for remote devices, eliminating the need to bring separate power cables to cameras in remote locations.

- Uses legacy analog video cabling (75Ω coax)
- Fully transparent 100Base-T full duplex Ethernet
- including link status pass-through
- Full 100 Mbps FDX over 250 meter coax runs*
- Can be concatenated using repeaters for even longer cable runs
- Supports 10/100Base-T Ethernet standard- de nition and high-de nition video camera including PoE-powered devices
- Optional DC power pass-through for remote powering of low-voltage cameras
- Small 70 mm × 37 mm enclosure can be wall mounted or the board—without enclosure—can be placed inside the camera enclosure

Microchip's Ethernet over Coax adapters (EQCO-FastECoax7501) are installed in pairs. The Head-End adapter takes conventional 100Base-T Ethernet from the NVR and passes it through the PoE-compliant Ethernet switch, or a PoE injector, to the Camera-Side unit. It can be optionally powered by an AC adapter. Power and bidirectional data is passed over the coax cable to the Camera Side adapter at the far end which optionally powers the camera.

Products supported

- EQCO875SC.3

FIGURE 1-1: COAXIAL ETHERNET PMD CONNECTION

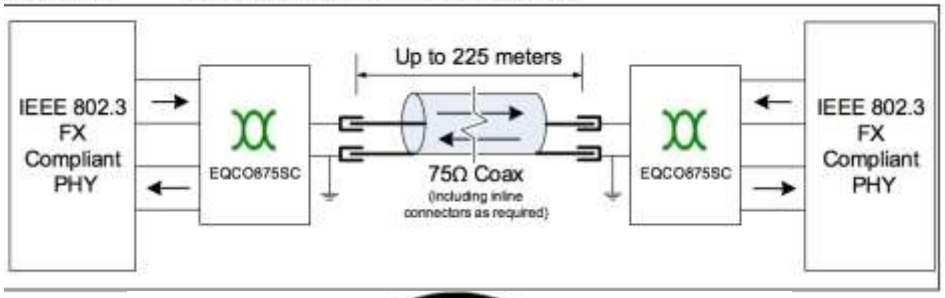

<< BACK

EQCO-SDI-30-7502
HD-SDI Repeater Module

Online Info

Summary
Microchip's EQCO-SDI30-7501 is an extender solution for HD-SDI links, operating over a standard 75Ω coax cable. Each unit receives an attenuated HD-CCTV signal and extends it up to 220m over the coax cable.
The repeater contains three critical components to correct and then retransmit the signal:

Parameter Name	Value
Temp Range (°C)	0 to 50
Storage Temp Range (°C)	-20 to 70
Distance (meters)	220m over RG6 @ 1.5Gbps
Downlink Speed	3Gbps
Uplink Speed	38.4Kbps
Supply Voltage	12VDC or 24VDC
Power over Coax (mW)	up to 9000
Interface Connector	75-ohm BNC to BNC

Features:

- Adaptive Equalizer to return the signal to its original
- amplitude and modulation
- Reclocker to resynchronize the signal—bringing it back to its original condition
- Cable Driver to retransmit the signal with its original characteristics restored
- Power can be transmitted from the recorder (DVR) side to the camera over the coax cable
- Up to five repeaters may be powered from the first repeater at the DVR side over the cable; if only one or two repeaters are used, the remaining power may also be adequate to power the SDI camera at the remote end
- A control signal (RS485) can be transmitted from the recorder (DVR) side to the camera over the coax cable
- The repeater enables simultaneous signal transmission camera control, and power, over a single cable

<< BACK

P/N: EQCO-SDI-30-7502

CoaXPress Transmitter Eval Board

Online Info

The CoaXPress (CXP) machine vision standard uses asymmetric data transmission over Coax cables - with speeds of up to 6.2Gbit/s from the camera and up to 20Mbit/s control data from the frame grabber to the camera. Microchip offers fully qualified board-sets (transmitter and receiver) as an evaluation and development aid to customers.

Products supported

- EQCO62T20.3
- EQCO31T20.3

CoaXPress® CXP Evaluation Board - Transmitter (Part # EVB-DBSUB1584)

<< BACK

P/N: EVB-DBSUB1584

CoaXPress Receiver EVB-DBSUB1586

Online Info

The CoaXPress (CXP) machine vision standard uses asymmetric data transmission over Coax cables - with speeds of up to 6.2Gbit/s from the camera and up to 20Mbit/s control data from the frame grabber to the camera. Microchip offers fully qualified board-sets (transmitter and receiver) as an evaluation and development aid to customers.

Products supported

- EQCO62R20.3
- EQCO31R20.3

CoaXPress® CXP Evaluation Board - Receiver (Part # EVB-DBSUB1586)

<< BACK

P/N: EVB-DBSUB1586

TC72 PICtail™ Demo Board

Online Info

The TC72 Digital Temperature Sensor PICtail™ Demo Board demonstrates how to interface the TC72 Temperature Sensor device to a microcontroller. A PIC16F676 14-pin Flash-based 8-bit CMOS microcontroller is included with the demo board, which can be used with the PICkit™ 1 Flash Starter Kit, along with firmware that provides the SPI interface and temperature conversion routines, to communicate with the TC72.

The Demo Board can also be used as a stand-alone module to quickly add thermal-sensing capability to any existing application. This basic sensor functionality is implemented on a small PCB.

Products supported

- TC72
- PIC16F676

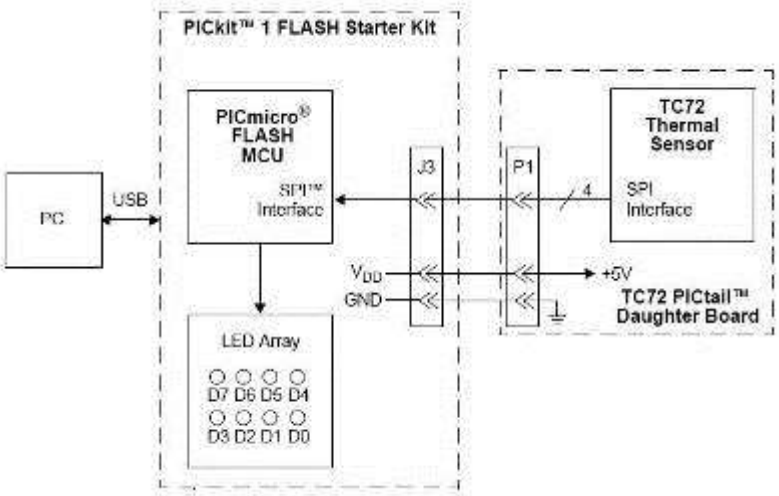

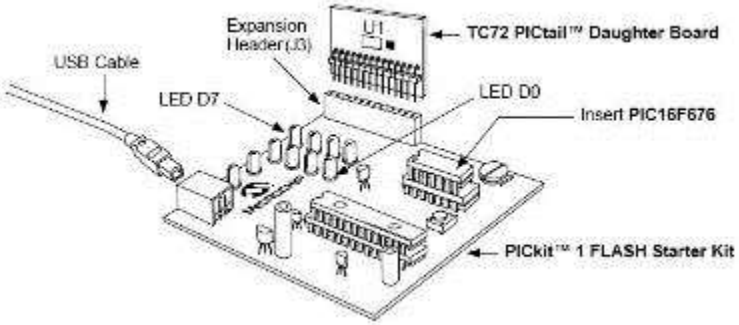

<< BACK

P/N: TC72DM-PICTL

TC77 PICtail™ Demo Board

Online Info

The TC77 Thermal Sensor PICtail™ Demo Board demonstrates how to interface the TC77 device to a microcontroller. A PIC16F676 14-pin Flash-based 8-bit CMOS microcontroller is included with the demo board, which can be used with the PICkit™ 1 Flash Starter Kit, along with firmware that provides the SPI interface and temperature conversion routines, to communicate with the TC77.

The Demo Board can also be used as a stand-alone module to quickly add thermal-sensing capability to any existing application. This basic sensor functionality is implemented on a small PCB.

Products supported

- TC77
- PIC16F676

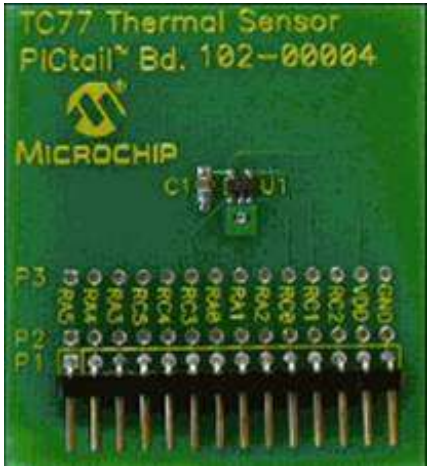

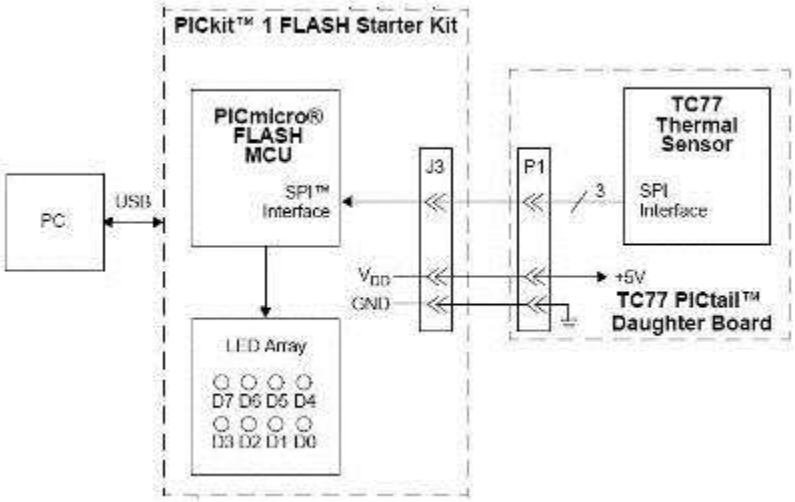

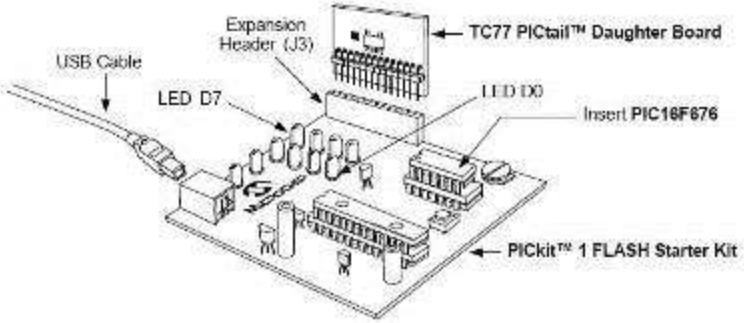

<< BACK

P/N: TC77DM-PICTL

MCP9800 PICtail™ Demo Board

Online Info

The MCP9800 Thermal Sensor PICtail™ Demo Board demonstrates how to interface the MCP9800 to a PIC® microcontroller using the PICkit™ 1 Flash Starter Kit as a platform. A PIC16F676 14-pin Flash-based 8-bit CMOS microcontroller is included with the demo board, which can be used with the PICkit™ 1 Flash Starter Kit. Also included is firmware that provides the I²C™ interface and temperature conversion routines, to communicate with the MCP9800 and to convert the serial data.

The MCP9800 Thermal Sensor PICtail Demo Board can also be used as a stand-alone module to quickly add thermal sensing capability to any existing application. This basic sensor functionality is implemented on a small Printed Circuit Board (PCB) and an interface via a standard 100 mil header

Products supported

- MCP9800
- PIC16F676

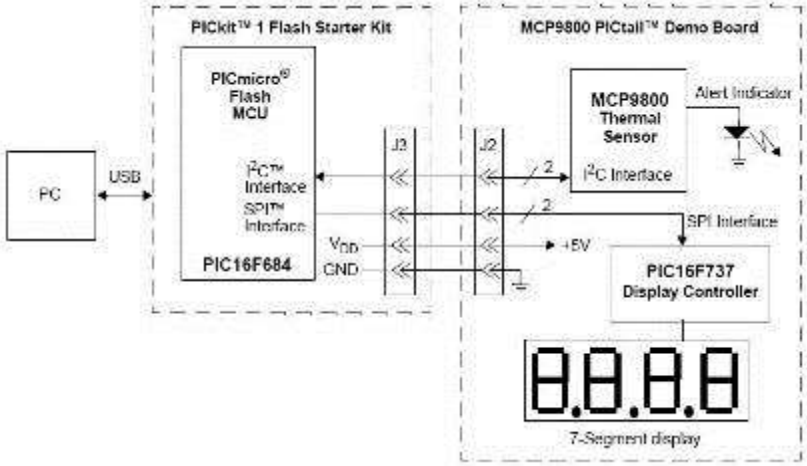

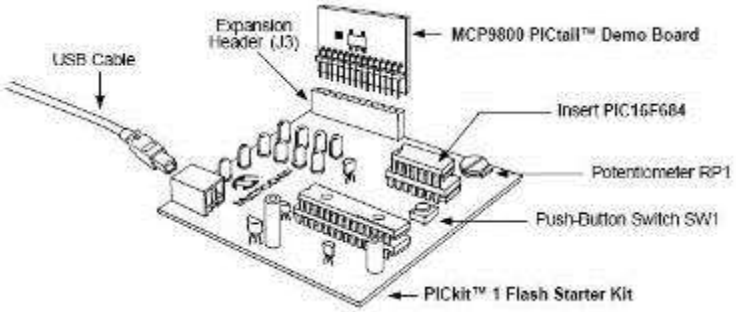

<< BACK

P/N: MCP9800DM-PCTL

MCP9800 Data Logger Demo Board

Online Info

The MCP9800 Temperature Data Logger Demo Board demonstrates how to use the MCP9800 and an on-board EEPROM to log temperature data. A PIC16F676 14-pin Flash-based 8-bit CMOS microcontroller is used with the MCP9800 and stores the temperature data in EEPROM. The PIC microcontroller also communicates with a PC using the PICkit1™ Flash Starter Kit. The temperature data stored in the EEPROM can be transferred to a PC using the PICkit™ 1 software and can be saved in .csv format. The data file can be opened using Microsoft® Excel® software.

The MCP9800 Temperature Data Logger Demo Board can also be used as a stand-alone module, powered with a lithium battery, to measure ambient temperature and store up to 4096 temperature samples over an extended period of time.

Products supported

- MCP9800
- PIC16F684
- 24LC1025

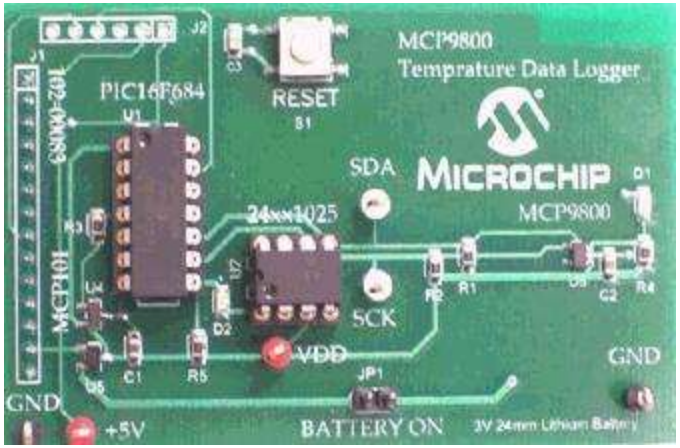

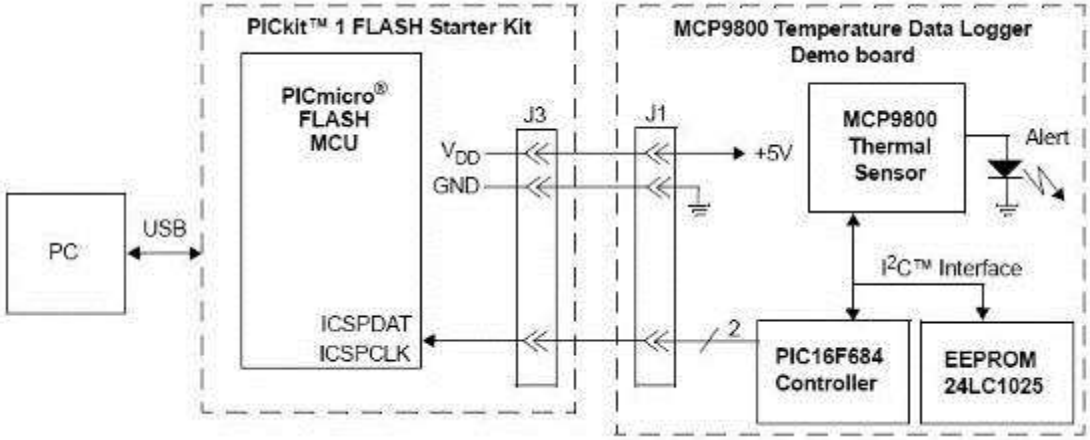

<< BACK

P/N: MCP9800DM-DL

MCP9800 Data Logger Demo Board 2

Online Info

The MCP9800 Temperature Data Logger Demo Board 2, once programmed, will log temperature measurements for a predetermined amount of time until the 24LC16B is fully programmed with temperature data (i.e., 2,048 temperature readings). Each sample uses one byte of memory. The intervals can be changed in the firmware provided by changing the TIMEOUTVAL variable. The firmware will take measurements for approximately 45 minutes (approx. 1 sample/sec).

Products supported

- MCP9800
- MCP101
- PIC10F202
- 24LC16B

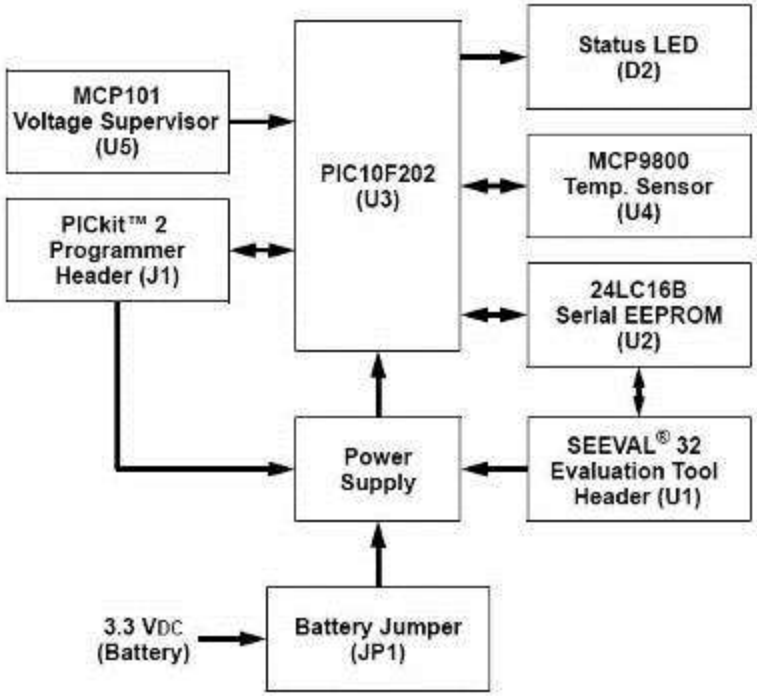

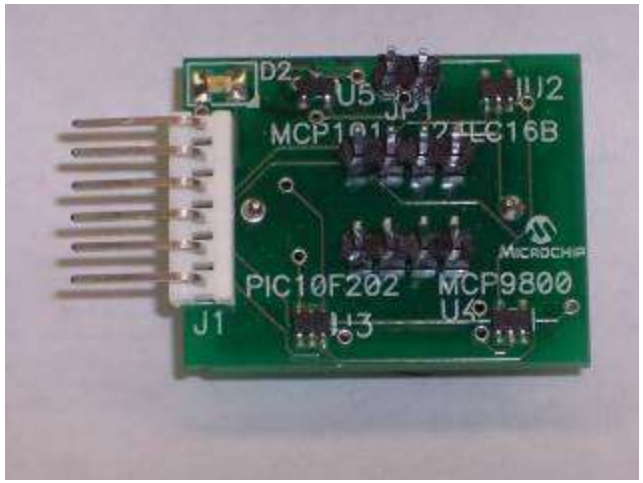

<< BACK

P/N: MCP9800DM-DL2

MCP9800 Temperature Sensor Demo Board

Online Info

The MCP9800 Temperature Sensor Demo Board demonstrates the sensor's features. Users can connect the demo board to a PC with USB interface and evaluate the sensor performance. The 7-Segment LED displays temperature in degrees Celsius or degrees Fahrenheit; the temperature alert feature can be set by the users using an on board potentiometer. An alert LED is used to indicate an over temperature condition. In addition, temperature can be datalogged using the Microchip Thermal Management Software Graphical User Interface (GUI). The sensor registers can also be programmed using the GUI.

Products supported

- MCP9800
- PIC18F2550

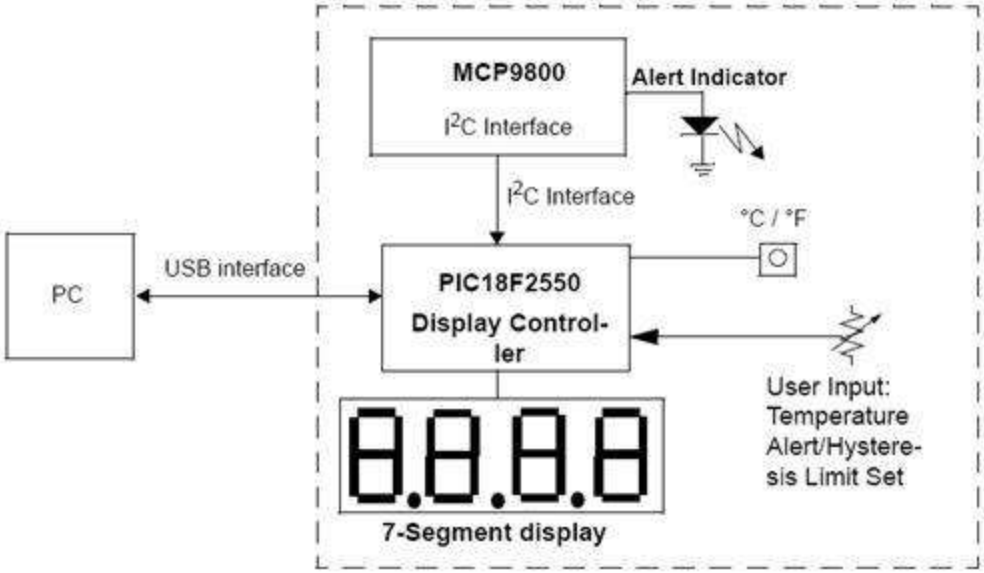

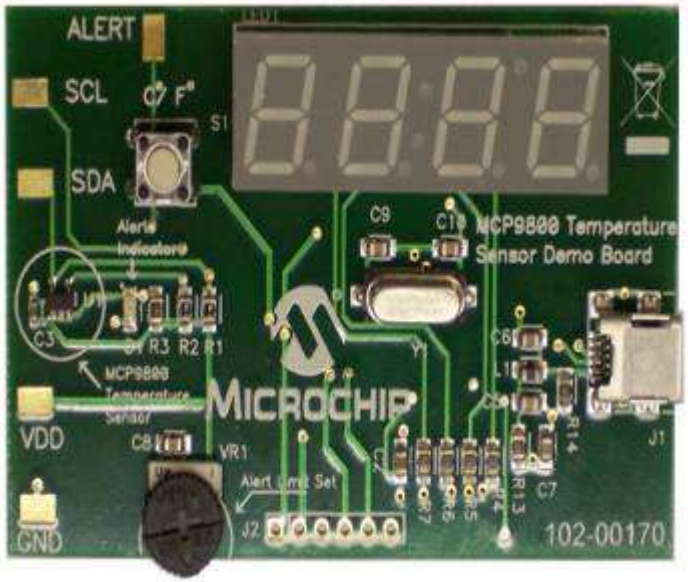

<< BACK

P/N: MCP9800DM-TS1

MCP9902 Evaluation Board

Online Info

The MCP9902 Temp Sensor Evaluation Board that demonstrates all of the MCP9902 features, and allows a user to view and modify registers. A user may:
-Plot the temperature of the two temperature channels
-Set alert temperatures associated with those channels.
LEDs indicating status information and test points are included to enable system voltages monitoring, using a voltmeter or an oscilloscope. The board requires only one universal serial bus (USB) connection to power the board.

Products supported

- MCP9902

<< BACK

P/N: ADM00615

Thermocouple Reference Design

Online Info

The Thermocouple Reference Design demonstrates Microchip's solution to accurately measure temperature using a Thermocouple and an 18-bit ADC, MCP3421. This solution eliminates the need for the traditional analog instrumentation system calibration or gain and offset trimming techniques. In addition, the Thermocouple linearization techniques can be implemented in firmware or software.

Products supported

- MCP9804
- MCP3421
- PIC18F2550

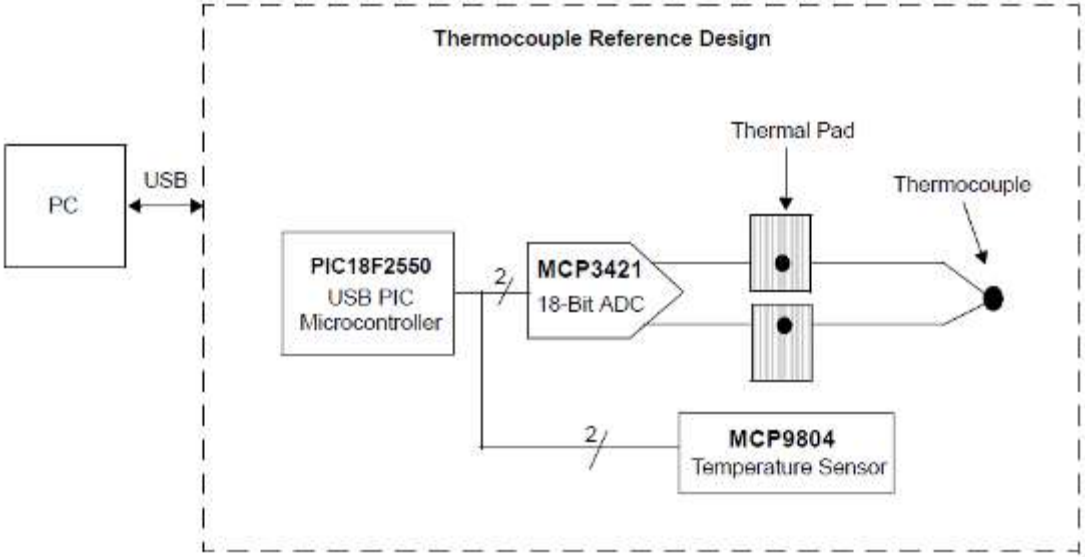

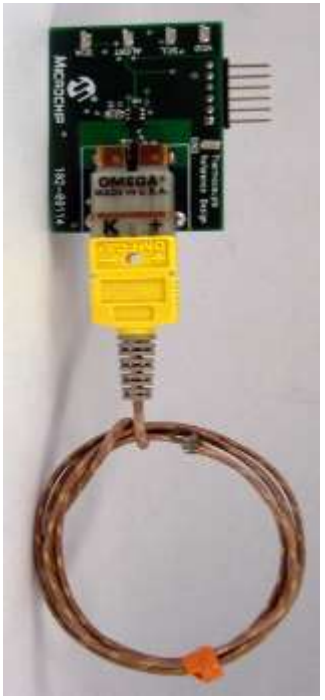

<< BACK to ADC

<< BACK to Temp. Sensors

P/N:TMPSNSRD-TCPL1

MCP9600 Evaluation Board

Online Info

The MCP9600 Thermocouple IC Evaluation Board is used to evaluate MCP9600 Thermocouple EMF voltage to degree Celsius converter. Users can easily evaluate all device features using a Type K thermocouple. The device also supports Types J, T, N, E, B, S and R thermocouples. Each of these types can be evaluated by replacing the Type K thermocouple connector with the corresponding connectors. In addition, the MCP9600 Thermocouple IC Evaluation Board connects to a PC via a USB interface. Temperature can be data-logged using the Microchip Thermal Management Software Graphical User Interface (GUI).

Products supported

- MCP9600
- PIC18F2520

<< BACK

P/N: ADM00665

MCP9700 PICtail™ Demo Board

Online Info

The MCP9700 Temperature-to-Voltage Converter PICtail™ Demo Board demonstrates how to interface the MCP9700 to a PIC® microcontroller using the PICkit™ 1 Flash Starter Kit as a platform. A PIC16F676 14-pin, Flash-based, 8-bit CMOS microcontroller device is included with the demo board that can be used with the PICkit™ 1 Flash Starer Kit, along with firmware that provides the interface to the MCP9700 Temperature-to-Voltage Converter PICtail™ Demo Board and the voltage-to-temperature conversion routines.

The demo board can also be used as a stand-alone module to quickly add thermal sensing capability to any existing application. This basic sensor functionality is implemented on a small PCB and an interface via a standard 100 mil header.

Products supported

- MCP9700
- PIC16F676

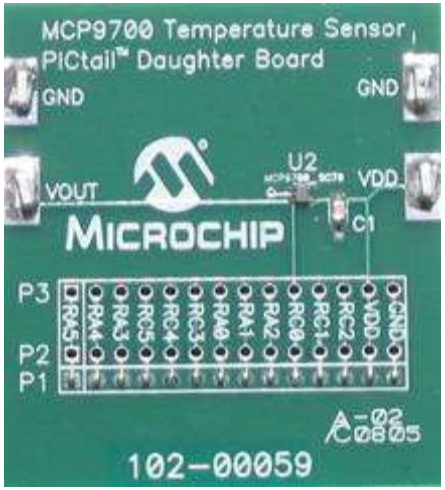

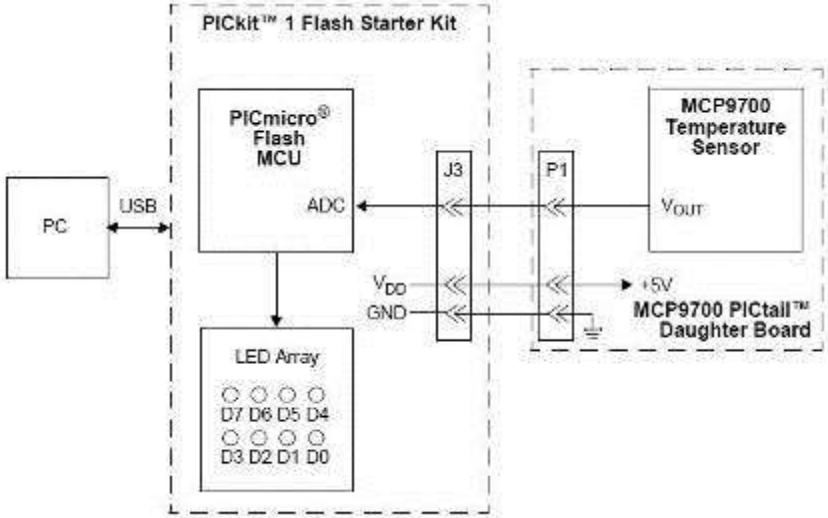

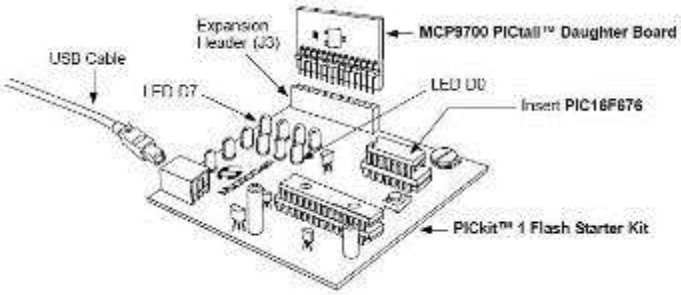

<< BACK

P/N: MCP9700DM-PCTL

MCP9700 Thermistor Demo Board

Online Info

The MCP9700 Thermistor Demo Board contains the analog circuitry to measure temperature. It uses BC Components' 232264055103 NTC thermistor to convert temperature to resistance. The thermistor is placed in a voltage divider which converts resistance to voltage. This voltage is filtered and placed at the MCP6S22 Programmable Gain Amplifier's (PGA) CH0 input. The PGA gains and buffers the thermistor. In addition, the board includes the MCP9700 Linear Active Thermistor. The MCP9700 outputs voltage proportional to temperature. A PIC18F2550 is used to both measure the voltage output of the MCP9700 and the MCP6S22 using an integrated 10-bit Analog to Digital Converter and communicate to a PC via USB interface. Temperature can be data logged using Microchip Thermal Management Software Graphical User Interface (GUI).

Products supported

- MCP9700
- MCP6S92
- PIC18F2550

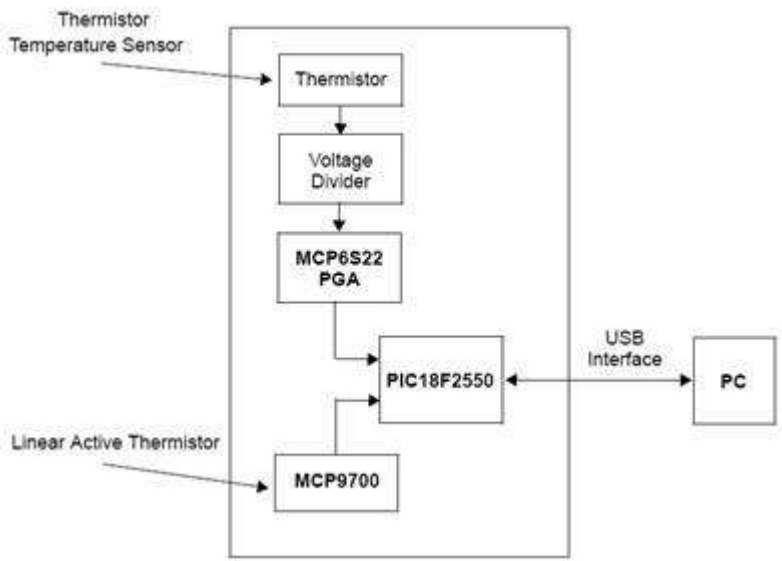

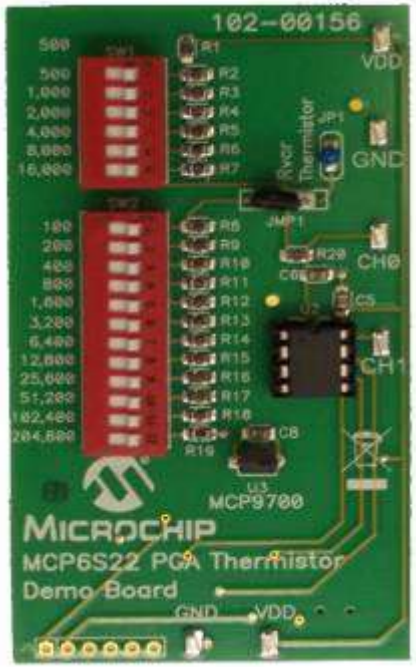

<< BACK

P/N: MCP9700DM-TH1

TC1047A PICtail™ Demo Board

Online Info

The TC1047A Temperature-to-Voltage Converter PICtail™ Demo Board demonstrates how to interface the TC1047A to a PIC® microcontroller using the PICkit™ 1 Flash Starter Kit as a platform. A PIC16F676 14-pin, Flash-based, 8-bit CMOS microcontroller device is included with the demo board that can be used with the PICkit™ 1 Flash Starter Kit, along with firmware that provides the interface to the TC1047A Temperature-to-Voltage Converter PICtail™ Demo Board and the voltage-to-temperature conversion routines.

The demo board can also be used as a stand-alone module to quickly add thermal sensing capability to any existing application. This basic sensor functionality is implemented on a small PCB and an interface via a standard 100 mil header.

Products supported

- TC1047A
- PIC16F676

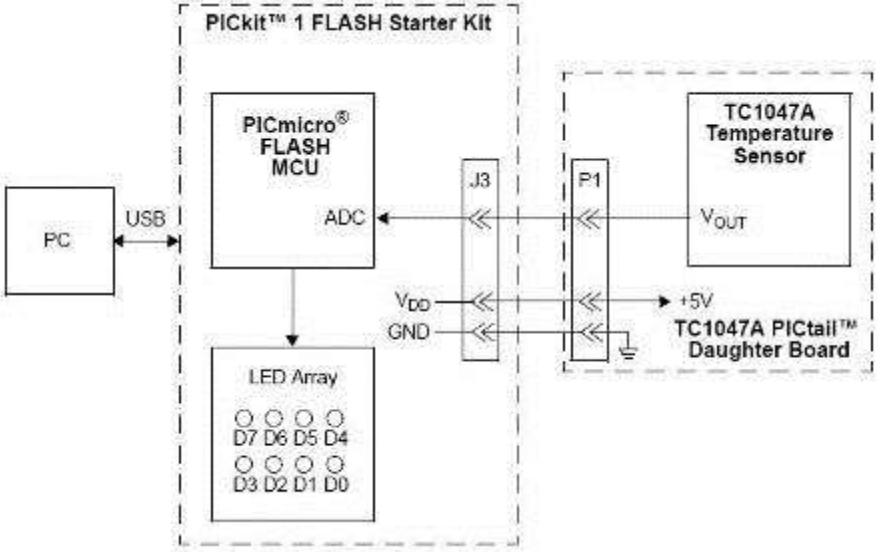

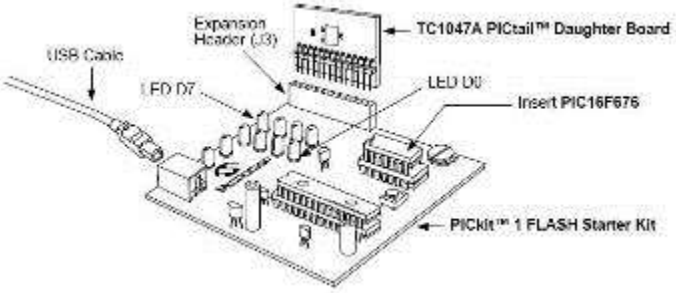

<< BACK

P/N: TC1047ADM-PICTL

PT100 RTD Eval Board

Online Info

The PT100 RTD Evaluation Board allows the user to evaluate Microchip's solution to accurately measure temperature using RTD. When biasing RTDs to measure temperature, self-heat due to power dissipation has to be considered. RTD resistance availability typically ranges from 100Ω to 5,000Ω. In order to measure the output voltage across the RTD over a wide temperature range, the biasing current has to be relatively high. This higher current causes more power dissipation through heat and skews the temperature reading. Microchip's solution to this challenge is to use a MCP6S26 Programmable Gain Amplifier (PGA) to increase the sensor dynamic output range and increase measurement resolution while significantly reducing the biasing current magnitude.

Products supported

- MCP6S26
- MCP3301
- MCP6024
- MCP41010
- MCP6002
- TC1071
- PIC18F2550

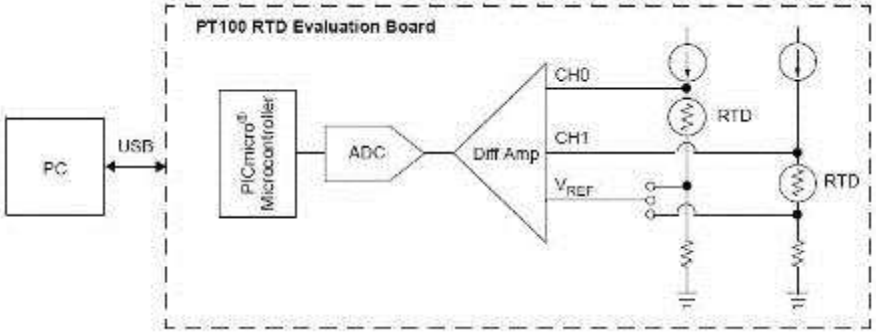

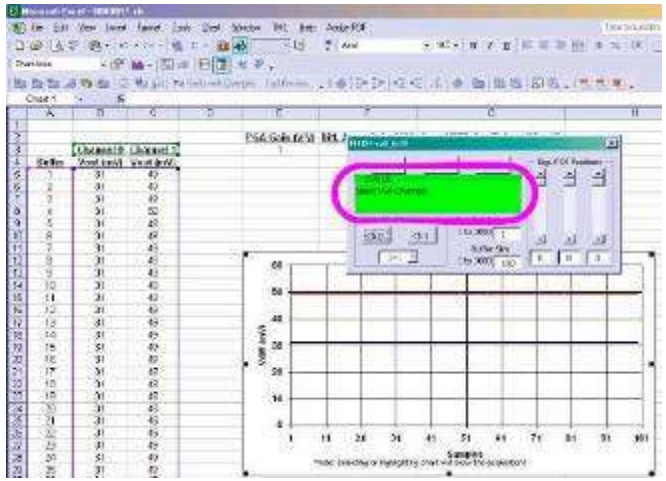

<< BACK

P/N: TMPSNS-RTD1

EMC1043/53 Evaluation Board

Online Info

The EMC1043/53 Evaluation Board provides the means to demonstrate the EMC1043/53 features and to view and modify registers through USB. LED indicators and test points are included to show status information. 2N3904 diode-connected transistors are installed on the PCB.

Products supported

- EMC1043
- EMC1053

<< BACK

P/N: ADM00490

EMC1043 Evaluation Board

Online Info

The EMC1043 Triple Temperature Sensor Evaluation Board is a USB-based platform for evaluating the EMC1043 device. It provides the means to demonstrate the EMC1043 features and to view and modify registers through USB. LED indicators and test points are included to show status information. The 2N3904 diode-connected transistors are installed on the PCB.

Products supported

- EMC1043

<< BACK

P/N: ADM00490

EMC1412 Evaluation Board

Online Info

The EMC1412 Evaluation Board provides the means to demonstrate the EMC1412 features and to view and modify registers through USB. LED indicators and test points are included to show status information and a fan driver circuit linearly drives a 5V fan to 3 different speeds based on programmable temperature limits.

Products supported

- EMC1412

<< BACK

P/N: ADM00491

EMC2101 Eval Board

Online Info

The EMC2101 EVB is a USB-based platform that provides the means to demonstrate EMC2101 features and to view and modify registers. A +12V fan and power supply are provided to demonstrate the fan control functionality. LEDs indicate status information and test points are included to monitor system voltages with a user provided voltmeter or oscilloscope. Also included are:

- Headers for connecting a remote diode or CPU/GPU thermal diode
- Chip Manager (SMSC application) allows:
  - Viewing and changing register values
  - Graphing of any register
  - Resistance Error Correction verification
- Autonomous register loading via included EEPROM (EMC2101-R only)
- USB communication to evaluation board
- An external SMBus master may also be used via jumper settings

Products supported

- EMC2101

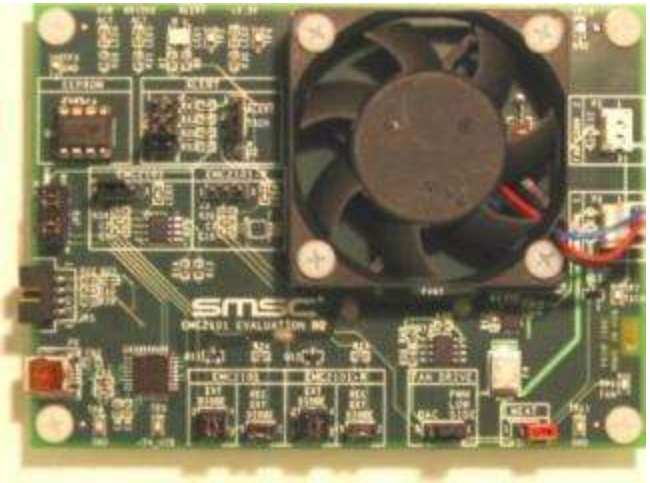

<< BACK

P/N: ADM00492

PAC1710/20 Eval Board

Online Info

The PAC1710/20 Single-Dual High Side DC Current Sense Eval Board provides the means to evaluate features and to view and modify registers of both PAC1710 and PAC1720. There are two modes of EVB current monitoring operation: Demo Mode, which monitors an onboard current source, and Sys Mode, which monitors an external current source. LEDs indicate status information, and test points are included to monitor system voltages with a user-provided voltmeter or oscilloscope

Features:

- Chip Manager software allows viewing and changing register values
- USB to SMBus bridge for power and communications
- Test points and LEDs for monitoring onboard function
- Screw terminal connections for monitoring external system current up to 20A
- Multiple onboard adjustable current sources (steady state, square wave, test pulse)
- Capability to connect directly to external SMBus master

Products supported

- PAC1710
- PAC1720

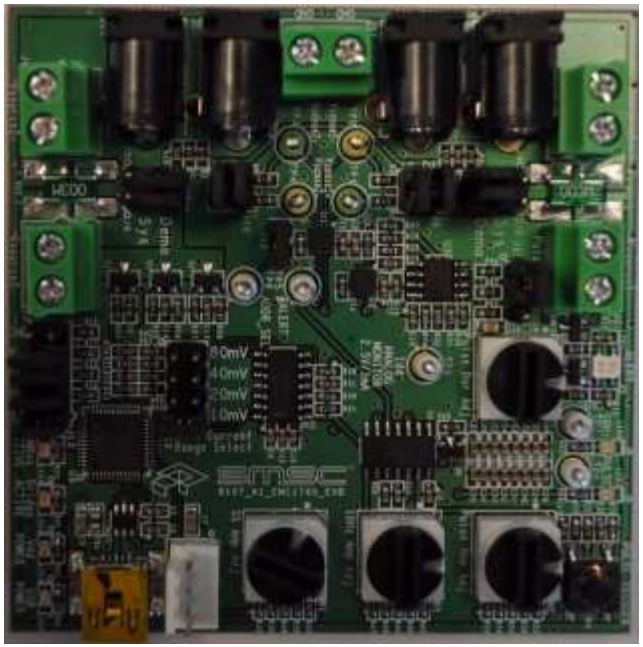

<< BACK

P/N: ADM00494

PAC1921 Evaluation Board

Online Info

The PAC1921 is a dedicated power monitoring device with a configurable analog output. This device is unique in that all power related information is available on the 2-wire/I²C© compatible interface and power, current, or voltage is available on the analog output..

The evaluation system has the ADM00592, a LabView based application, & allows the user to:

- View and change register values
- Save of settings of all registers allowing for quick configuration at a later time
- Graphing of any register

The hardware platform provides the user:

- Headers for connecting a Sense Resistor
- USB-to-SMBus bridge for communications
- Capability to connect directly to an external SMBus master

Products supported

- PAC1921

PAC1921 High-Side Power and Current Monitor Evaluation Board (Part # ADM00592)

<< BACK

P/N: ADM00592

UCS1001 Eval Board

Online Info

The UCS1001 Evaluation Board is intended for evaluation of stand-alone USB charging. The UCS1001 supports popular emulation profiles for Apple, Samsung, and BC1.2 compliant devices. Jumper configurations allow selection of operation for Dedicated Charging Emulation, Charging Downstream Port, Standard Downstream Port, and USB Pass Through

Products supported

- UCS1001-1
- UCS1001-2

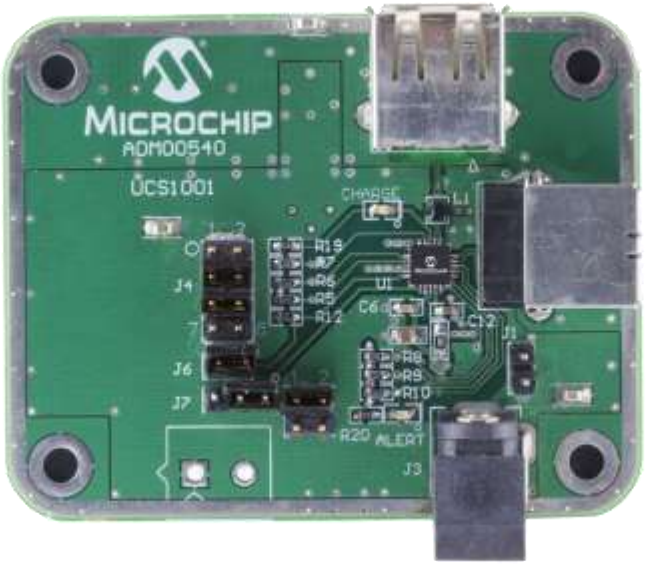

<< BACK

P/N: ADM00540

UCS1002 Eval Board

Online Datasheet

The UCS1002 Evaluation Board allows the user to use a graphical user interface to demonstrate the Highest Current Algorithm, apply charger emulation profiles, and set up for full BC1.2 CDP, DCP, and SDP modes. Options in the GUI include custom profile register configuration, dead battery routines, charge ration operation, and configuration of fault handling.

Products supported:

- UCS1002

P/N: ADM00497

<< BACK

MCP6SX2 Photodiode PICtail™ Demo Board

Online Info

The Photodiode PGA PICtail™ Daughter Board contains the analog circuitry to convert light incident to the photodiode to current. The op amp converts current to voltage (transimpedance amplifier). This voltage is sent to the CH0 input of the PGA. The PGA gains and buffers this output, which is sent off-board (V_{OUT}). Board power is applied to the +5V and GND inputs. The SPI bus makes it possible to control the PGA; its gain and input channel can be set as desired form the software.

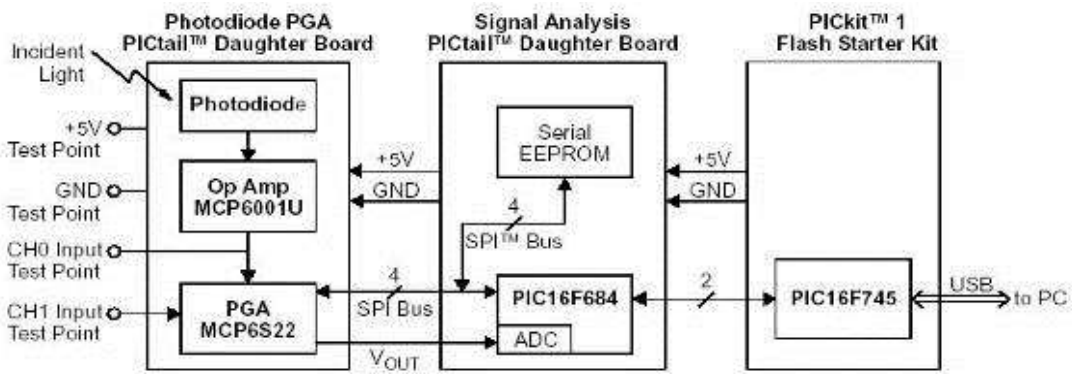

Products supported

- MCP6S22
- MCP6001

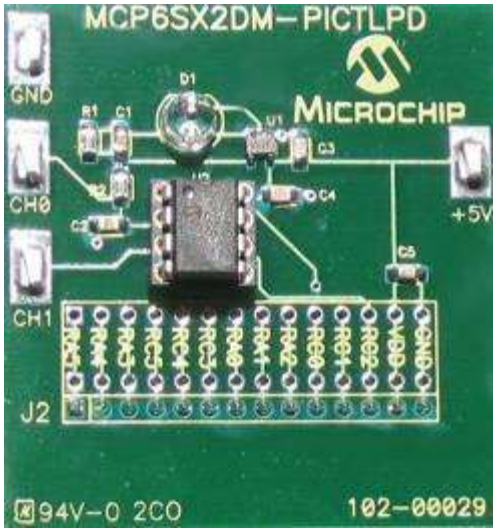

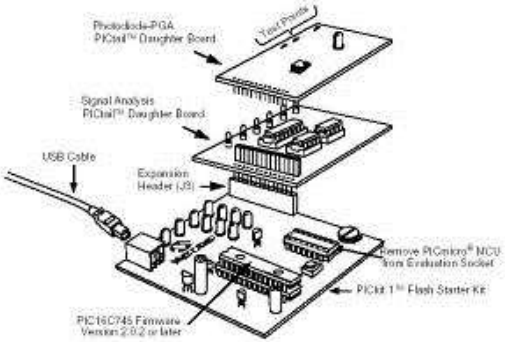

<< BACK

P/N: MCP6SX2DM-PCTLPD

MCP6S22 PICtail™ Demo Board

Online Info

The MCP6S22 PGA PICtail™ Demo Board is used to evaluate and demonstrate Microchip Technology's Programmable Gain Amplifier (PGA) family, MCP6S21/2/6/8. This board has a user interface program the MCP6S22 two-channel PGA. It can also be interfaced with Microchip's PICkit™ 1 Flash Starter Kit Development Board. This platform allows the user to develop firmware that selects the PGA gains and channels using SPI interface.

The demo board can also be used stand-alone, with a user interface that allows the PGA gains and channels to be selected without a firmware development. The board uses a USB interface to communicate with a PC, while the PICkit™ software can be used as a Graphical User Interface (GUI) to display the PGA output voltage.

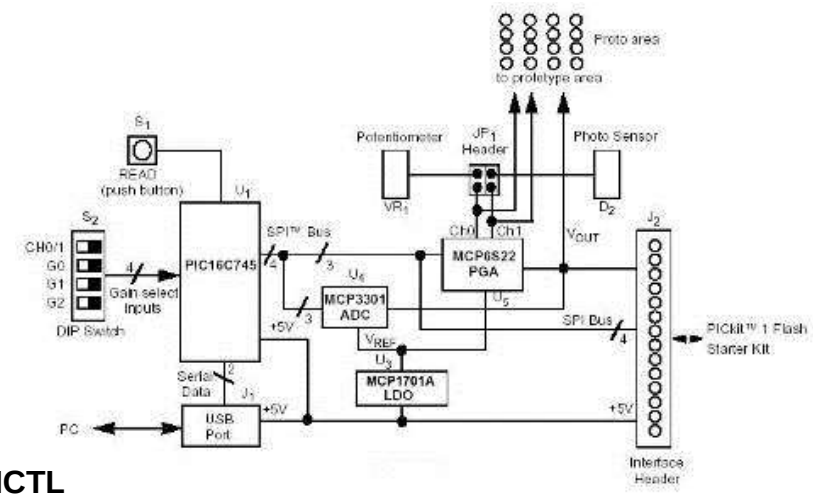

Products supported

- MCP6S22
- MCP3301
- MCP1701A
- PIC16C745

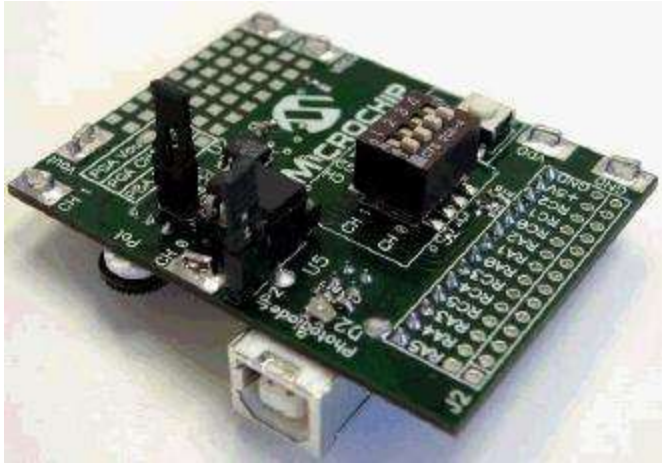

<< BACK

P/N: MCP6S22DM-PICTL

MCP6S2X Eval Board

Online Info

The single-channel MCP6S21 and six-channel MCP6S26 have been selected for this evaluation board. The PIC16F676 microcontroller is used on-board DIP switch settings that are configured according to the table printed on the evaluation board. This allows the user to program the channel, gain and shutdown of each PGA. Either PGA or both PGAs can be shut down. The six channels of the MCP6S26 and the PGA gains of 1, 2, 4, 5, 8, 10 ,16 and 32 V/V can be configured.

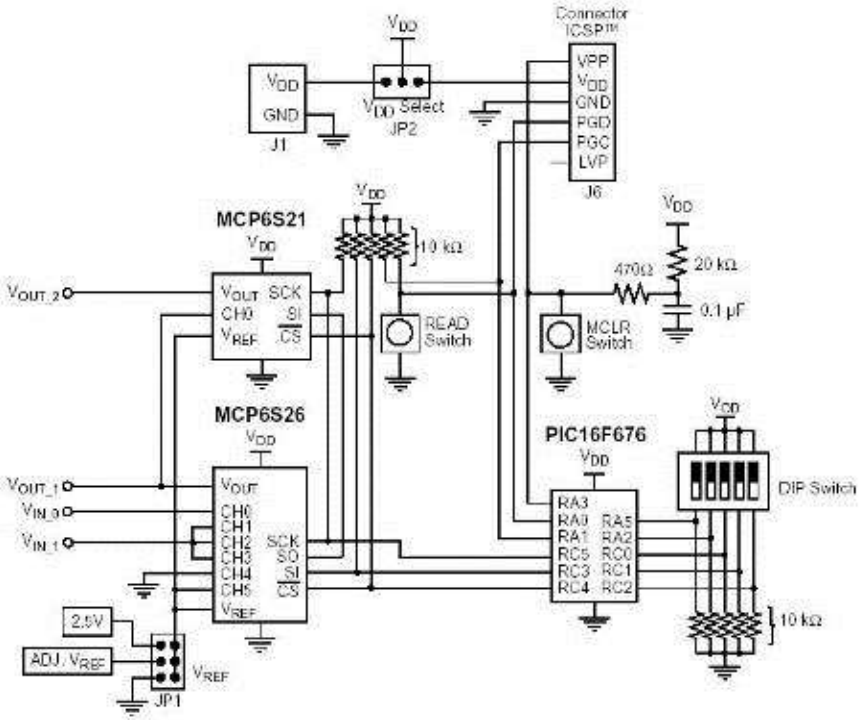

Products supported

- MCP6S21
- MCP6S26
- PIC16F676

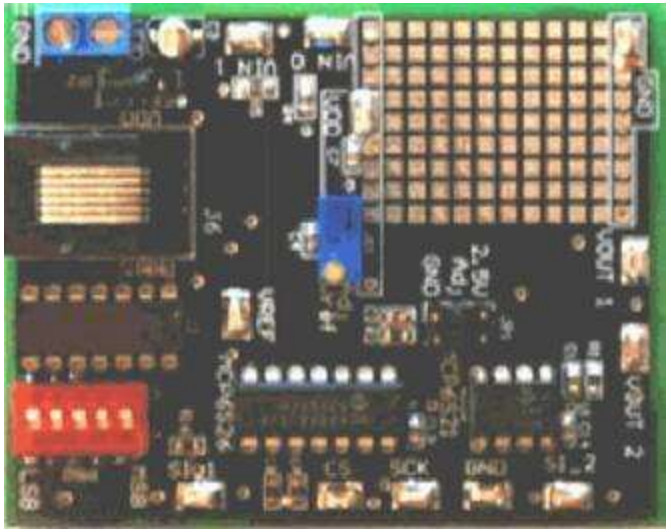

<< BACK

P/N: MCP6S2XEV

Humidity Sensor PICtail™ Demo Board

Online Info

The Humidity Sensor PICtail™ Demo Board senses the ambient relative humidity by changes in the capacitance of the humidity sensor (HS1101LF from Humirel). This sensor is connected to a MCP6291 op amp and a resistor to form an inverting (Miller) integrator. The PIC16F690 microcontroller sends a square wave to the input of the integrator, which the integrator converts to a triangle wave at its output. The firmware controls the magnitude of the triangle wave and measure the integration time. The microcontroller measure the time it takes for the triangle wave to rise and fall. These times are converted to a capacitance value.

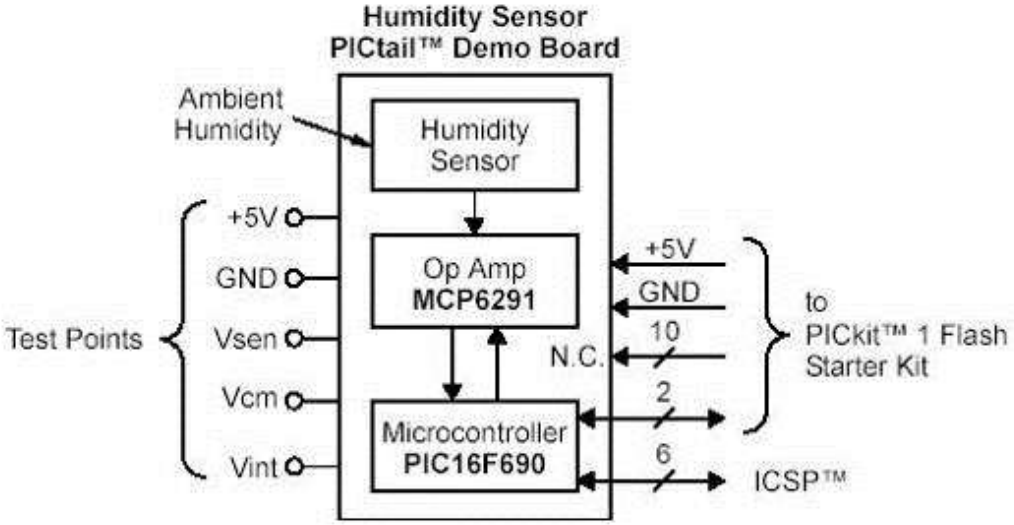

Products supported

- MCP6291
- PIC16F690

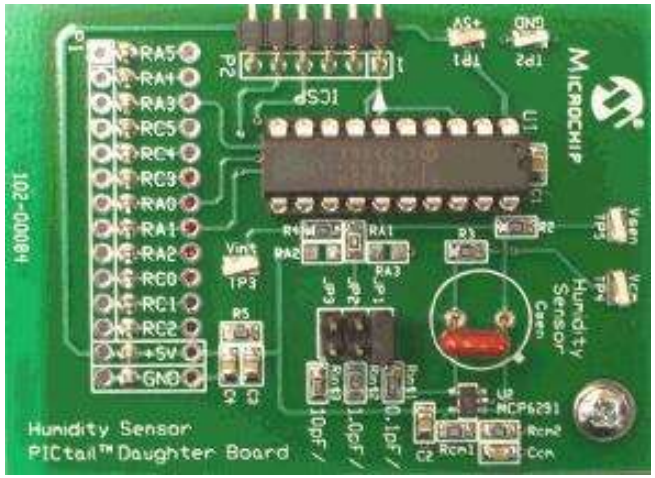

<< BACK

P/N: PIC16F690DM-PCTLHS

FilterLab®

Online Info

FilterLab® is an innovative software tool that simplifies active filter design. Available at no cost, the FilterLab® active filter software design tool provides full schematic diagrams of the filter circuit with component values and displays the frequency response.

Features

Allows the design of low-pass filters up to an 8th order filter with Chebyshev, Bessel or Butterworth responses from frequencies of 0.1 Hz to 10 MHz

Selection of flat passband or sharp transition from passband to stopband

Options, such as minimum ripple factor, sharp transition and linear phase delay, are available

Changes in capacitor values can be implemented

Generates a spice model of the designed filter allowing time domain analysis in spice simulations

Products supported

- MCP6xxx

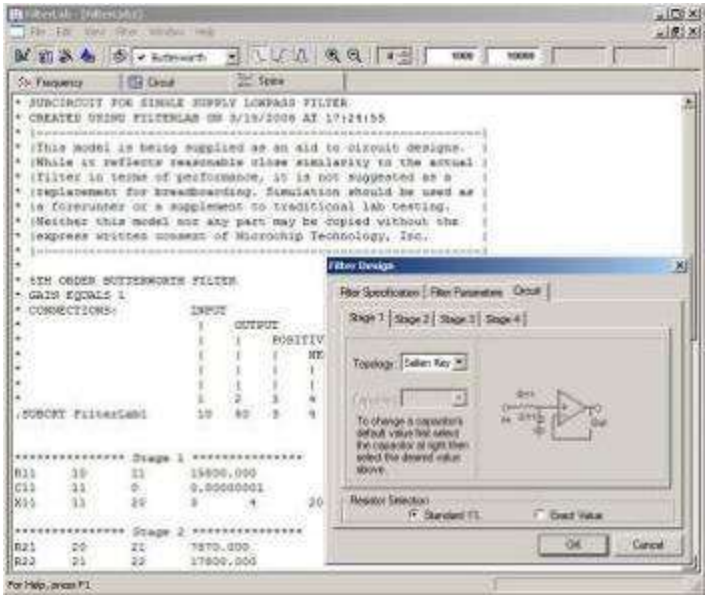

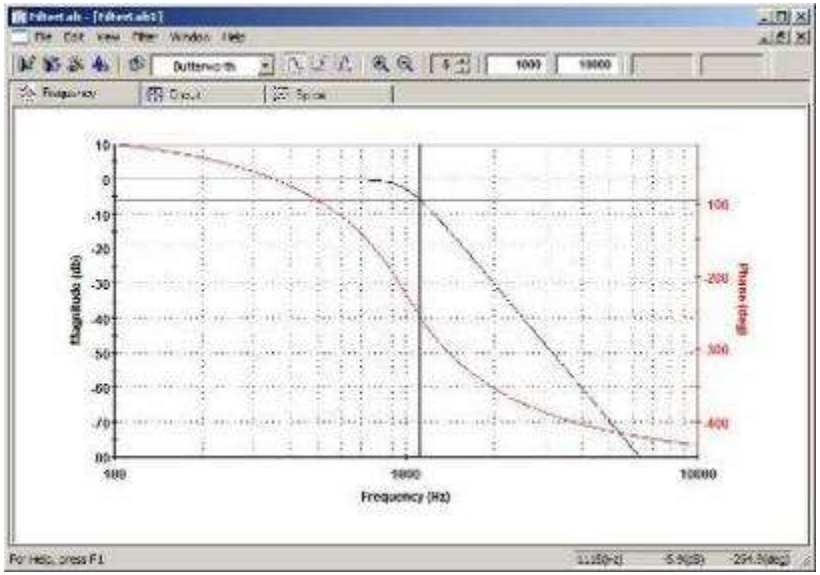

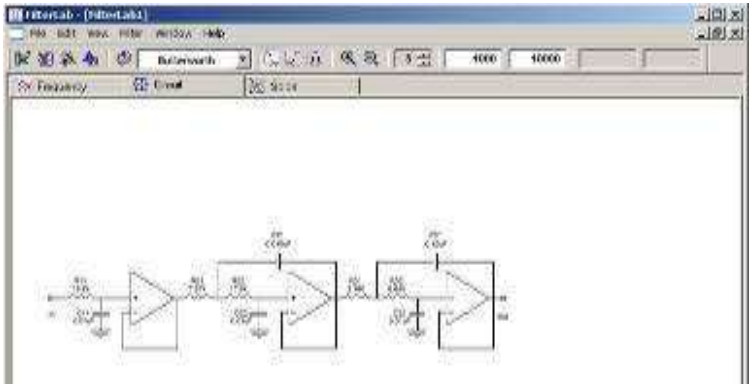

<< BACK

MCP6XXX Amplifier Evaluation Board 1

Online Info

The MCP6XXX Amplifier Evaluation Board 1 is designed to support inverting/non-inverting amplifiers, voltage followers, inverting/non-inverting comparators and inverting/non-inverting differentiators.

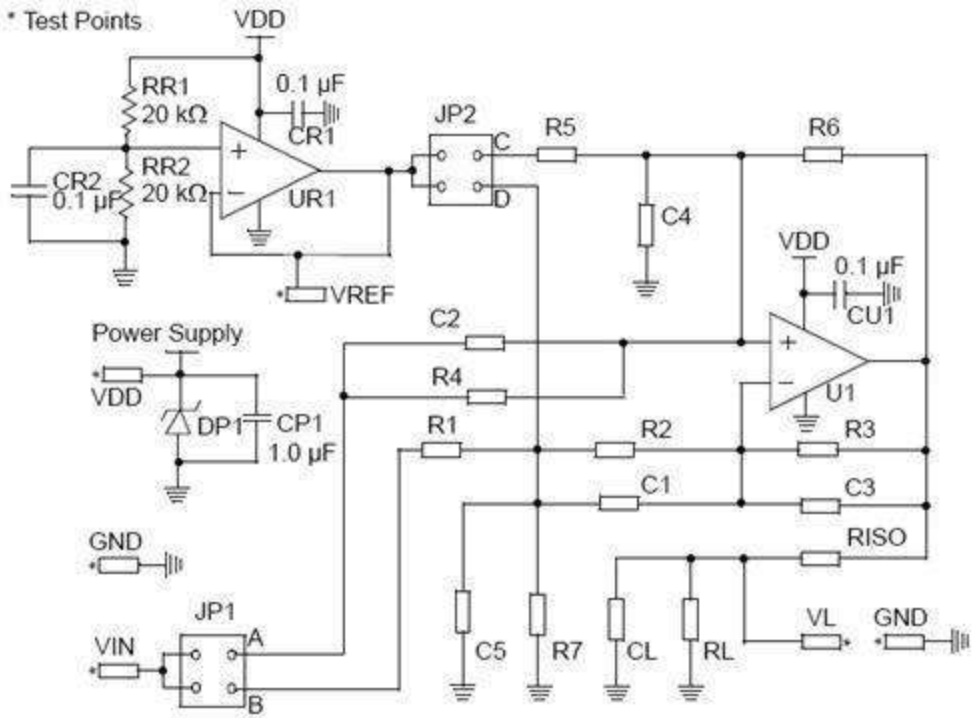

Products supported

- MCP6XXX

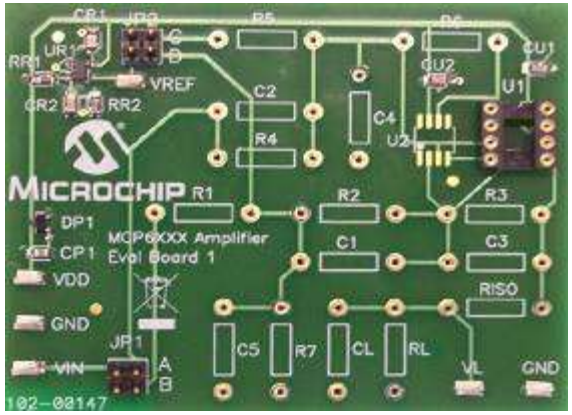

<< BACK

P/N: MCP6XXXEV-AMP1

MCP6XXX Amplifier Evaluation Board 2

Online Info

The MCP6XXX Amplifier Evaluation Board 2 is designed to support inverting/non-inverting summing amplifiers.

Products supported

- MCP6XXX

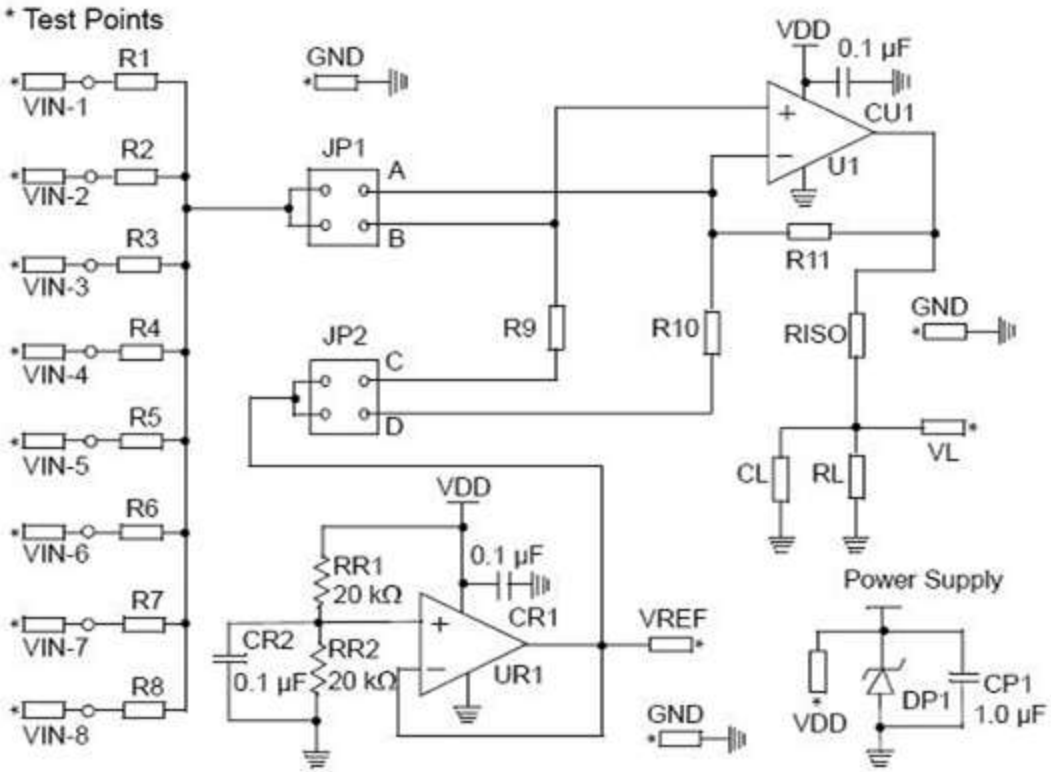

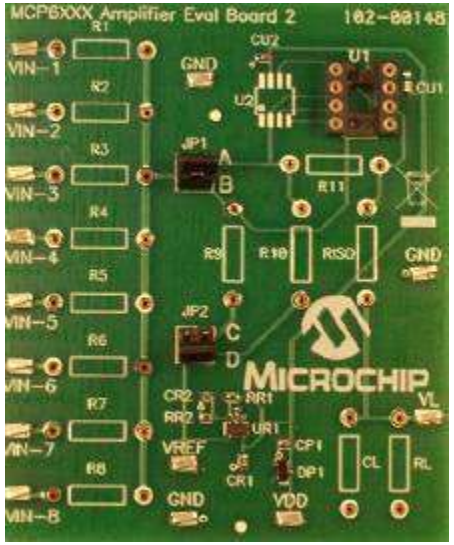

<< BACK

P/N: MCP6XXXEV-AMP2

MCP6XXX Amplifier Evaluation Board 3

Online Info

The MCP6XXX Amplifier Evaluation Board 3 is intended to support the difference amplifier circuits.

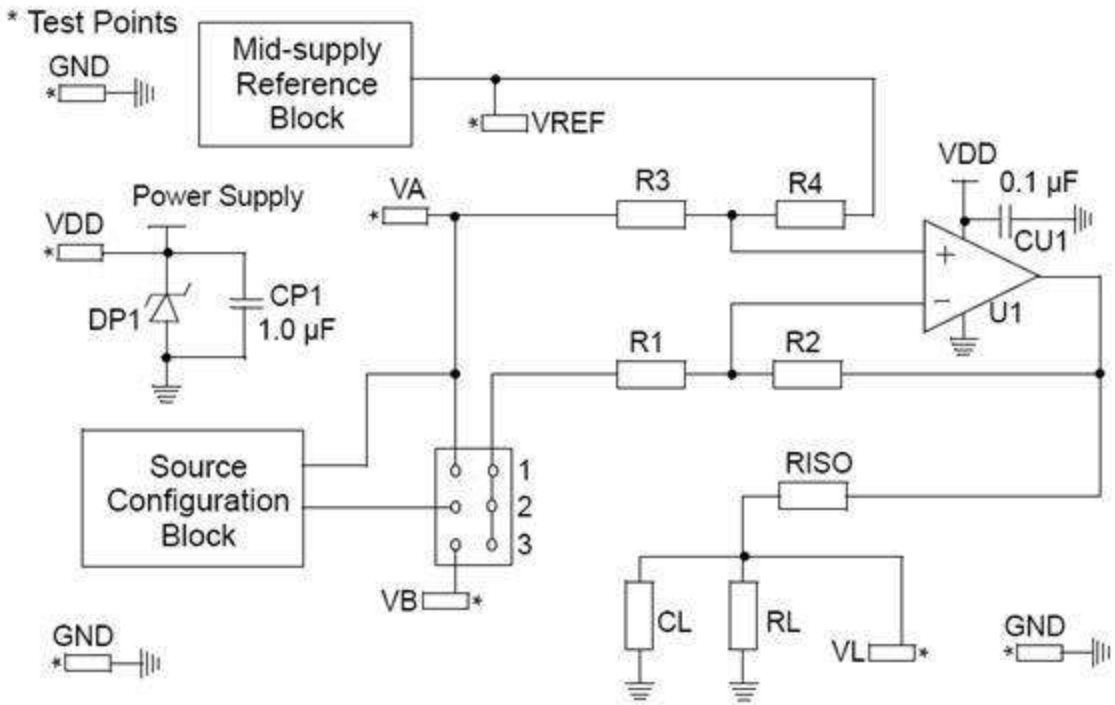

Products supported

- MCP6XXX

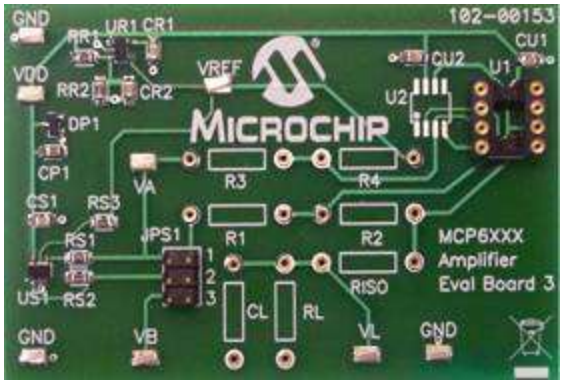

<< BACK

P/N: MCP6XXXEV-AMP3

MCP6XXX Amplifier Evaluation Board 4

Online Info

The MCP6XXX Amplifier Evaluation Board 4 is designed to demonstrate an inverting integrator using one op amp and supporting circuitry. This section details the conversion of the topology to the MCP6XXX Amplifier Evaluation Board 4. Figure shows the circuit diagram for the board.

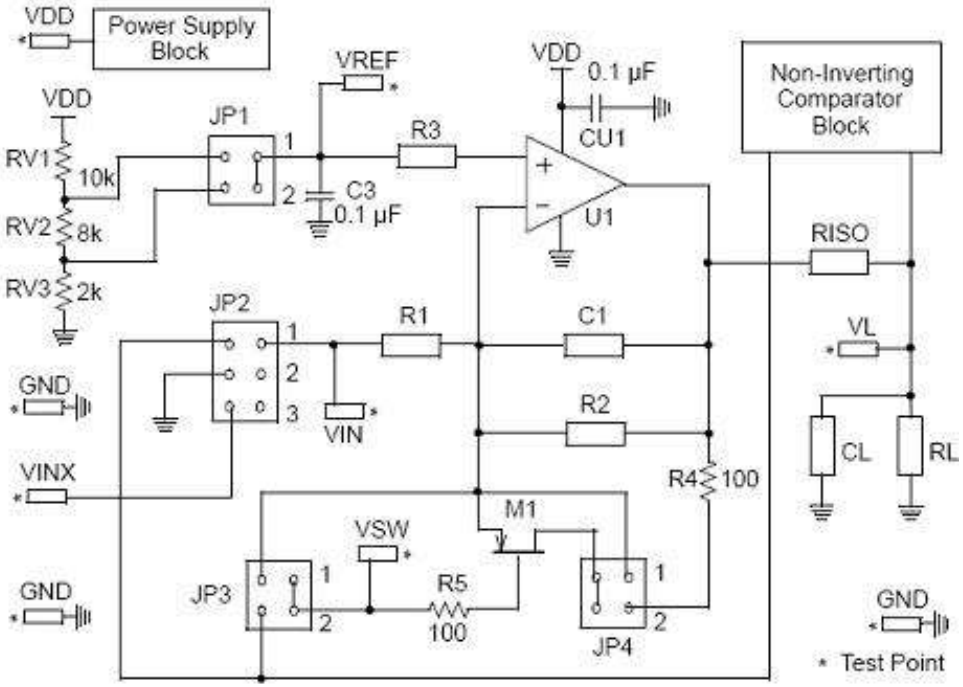

Products supported

- MCP6XXX

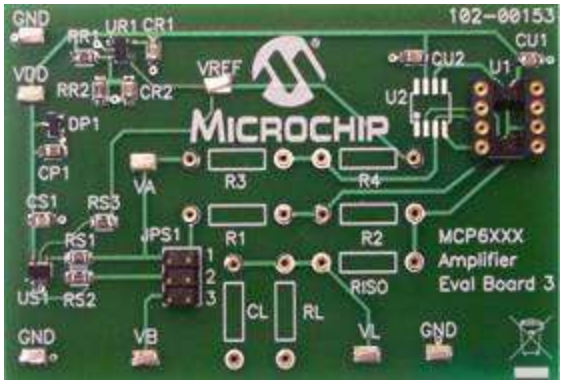

<< BACK

P/N: MCP6XXXEV-AMP4

MCP6H04 Evaluation Board

Online Info

The MCP6H04 Evaluation Board is intended to support an instrumentation amplifier and show the capability of the MCP6H04 operational amplifier. It uses a quad op amp in a difference amplifier configuration with input buffers and voltage reference. The test points for the power supply, ground, input signals, output signals, and voltage reference allow lab equipment to be connected to the board..

Products supported

- MCP6H04

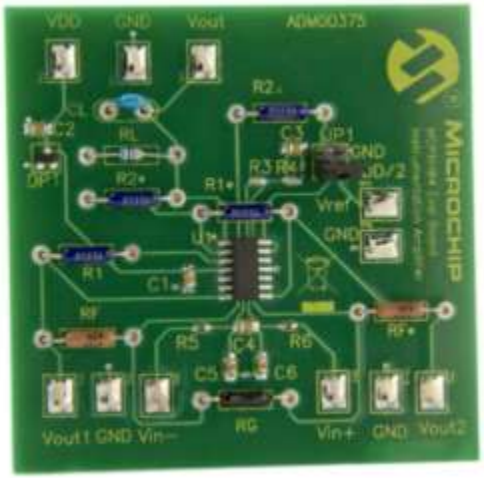

<< BACK

P/N: ADM00375

MCP6V01 Thermocouple Auto-Zeroed Ref. Design

Online Info

The MCP6V01 Thermocouple Auto-Zeroed Reference Design demonstrates how to use a difference amplifier system to measure electromotive force (EMF) voltage at the cold junction of thermocouple in order to accurately measure temperature at the hot junction. This can be done by using the MCP6V01 auto-zeroed op amp because of its ultra low offset voltage (V_{OS}) and high common mode rejection ratio (CMRR)

Products supported

- MCP6V01
- MCP9800
- MCP1541
- PIC18F2550

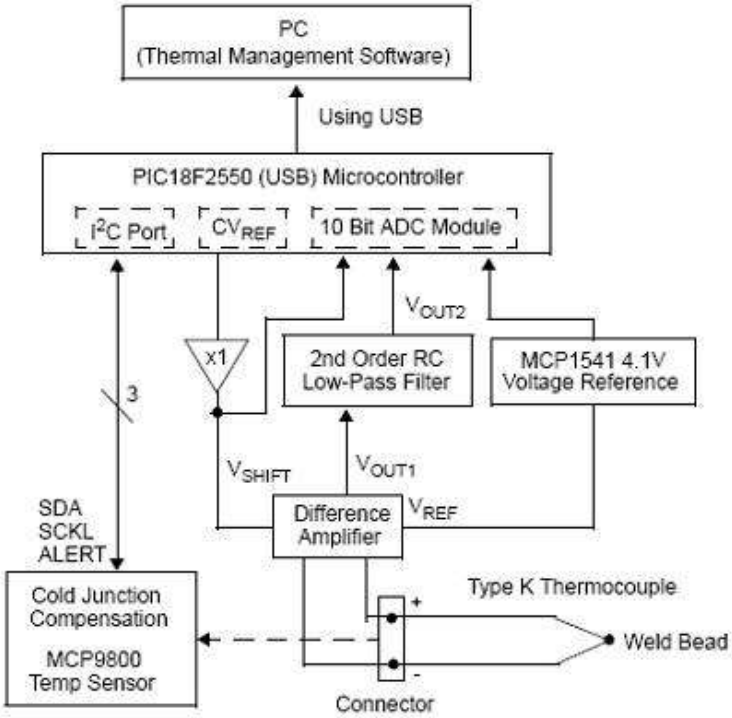

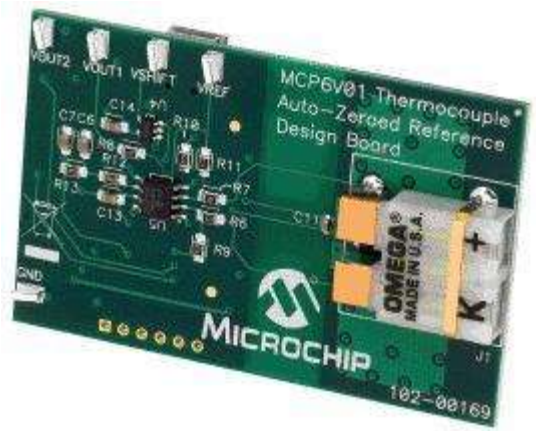

<< BACK

P/N: MCP6V01RD-TCPL

MCP6V01 Input Offset Demo Board

Online Info

The MCP6V01 Input Offset Demo Board is intended to provide a simple means to measure the MCP6V01/2/3 op amps input offset voltage (V_{OS}) under a variety of bias conditions. This V_{OS} includes the specified input offset voltage value found in the data sheet plus changes due to power supply voltage (PSRR), common mode voltage (CMRR), output voltage (A_{OL}) and temperature (I_{VOS}/I_{TA}).

Products supported

- MCP6V01
- MCP6V03
- MCP6V06
- MCP6V08

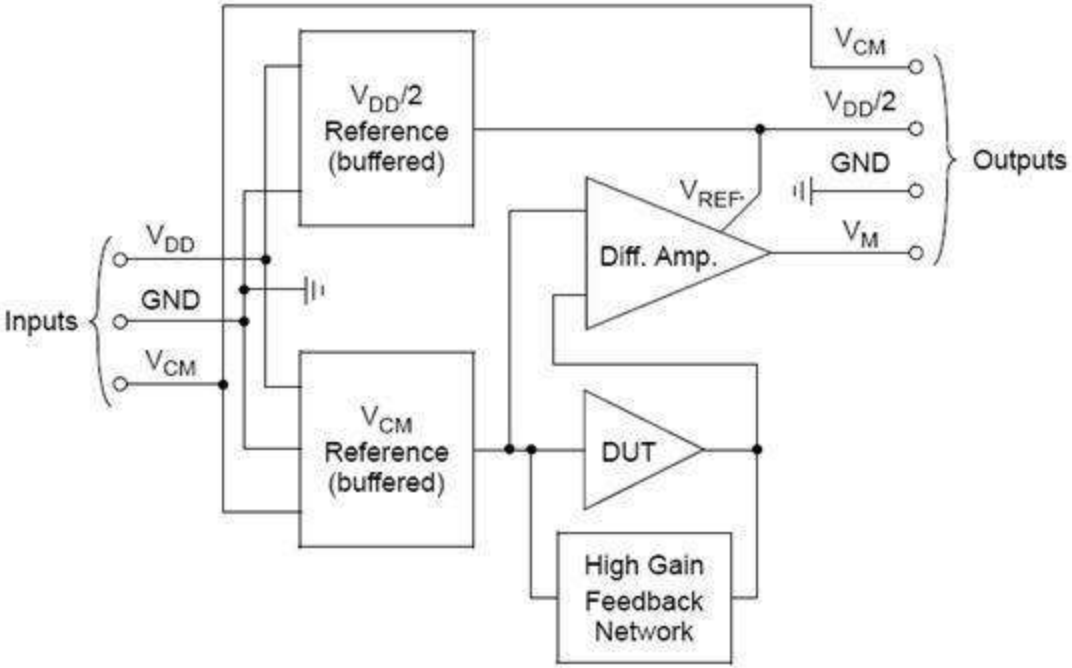

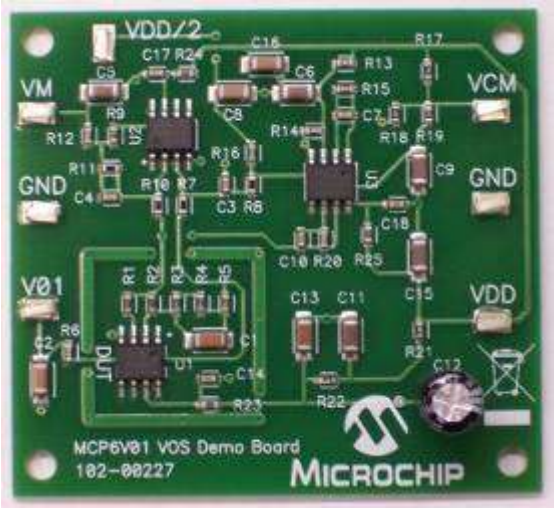

<< BACK

P/N: MCP6V01DM-VOS

MCP651 Input Offset Evaluation Board

Online Info

The MCP651 Input Offset Evaluation Board is intended to provide a simple means to measure the MCP651 op amp's input offset voltage under a variety of operating conditions. The measured input offset voltage includes the input offset voltage specified in the data sheet plus changes due to: power supply voltage (PSRR), common mode voltage (CMRR), output voltage, input offset voltage drift over temperature and 1/f noise.

The MCP651 Input Offset Evaluation Board works most effectively at room temperature (near +25°C). Measurements at other temperatures should be done in an oven where the air velocity is minimal.

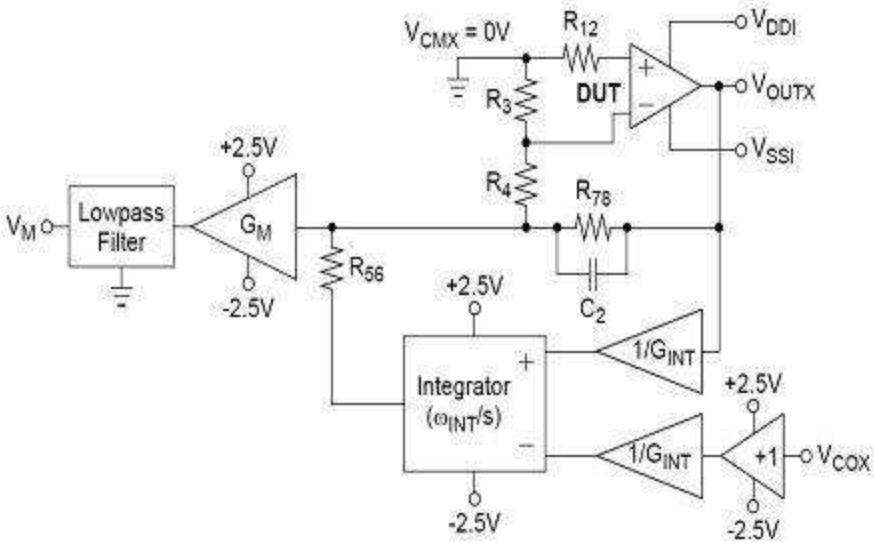

Products supported

- MCP651
- MCP6V01

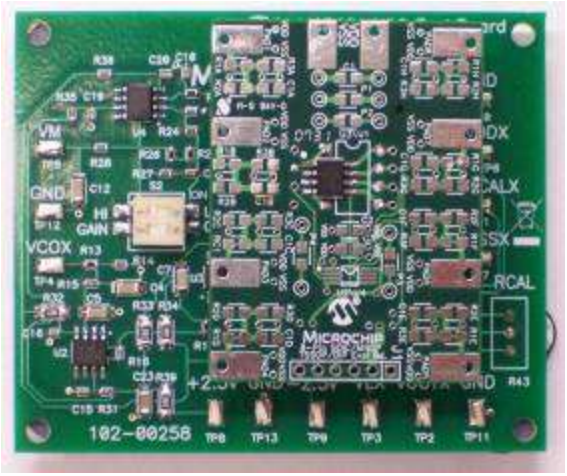

<< BACK

P/N: MCP651EV-VOS

MCP6031 Photodiode PICtail™ Demo board

Online Info

The MCP6031 Photodiode PICtail™ Plus Demo Board demonstrates how to use a transimpedance amplifier, which consists of MCP6031 high precision op amp and external resistors, to convert photo-current to voltage.

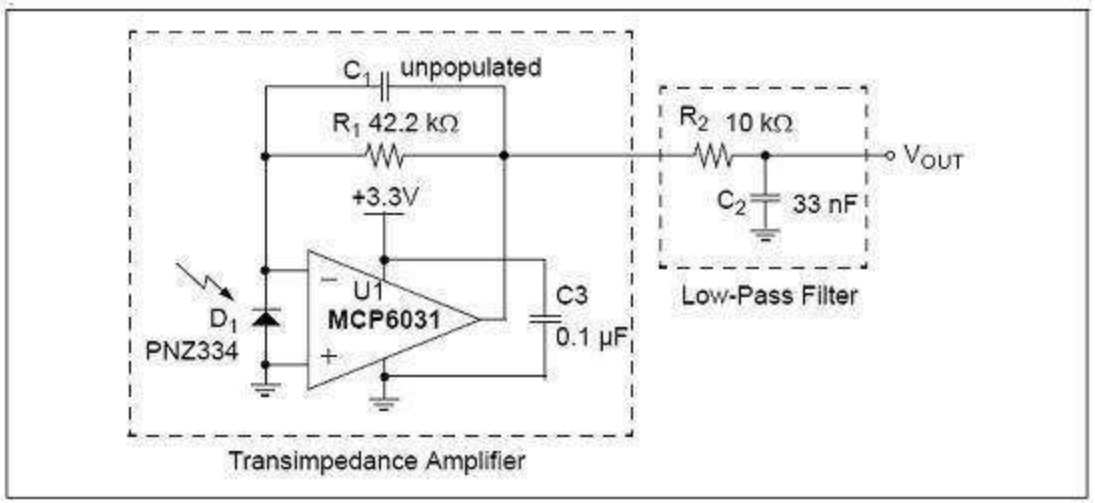

FIGURE 1-4: *MCP6031 Photodiode PICtail™ Plus Demo Board Circuit Diagram.*

Products supported

- MCP6031

<< BACK

P/N: MCP6031DM-PTPLS

MCP661 Line Driver Demo board

Online Info

This demo board uses the MCP661 in a very basic application for high-speed op amps; a 50Ω line (coax) driver.
It gives:
- A 30 MHz solution
- High speed PCB layout techniques
-A means to test AC response, step response and distortion

Both the input and the output are connected to lab equipment with 50Ω BNC cables. There are 50Ω terminating resistors and transmission lines on the board. The op amp is set to a gain of 2V/V to overcome the loss at its output caused by the 50Ω resistor at that point. Connecting lab supplies to the board is simple; there are three surface mount test points provided for this purpose.

Products supported

- MCP661
- MCP662
- MCP665

<< BACK

P/N: MCP661DM-LD

MCP6N11 Wheatstone Bridge Reference Design

Online Info

This board demonstrates the performance of Microchip's MCP6N11 instrumentation amplifier (INA) and a traditional three op amp INA using Microchip's MCP6V26 and MCP6V27 auto-zeroed op amps. The input signal comes from an RTD temperature sensor in a Wheatstone bridge. Real world interference is added to the bridge's output, to provide realistic performance comparisons. Data is gathered and displayed on a PC, for ease of use. The USB PICmicro® microcontroller and included Graphical User Interface (GUI) provides the means to configure the board and collect sample data.

This Kit Contains:

- 1x MCP6N11 Wheatstone Bridge Reference Design
- 1x Mini USB Cable

Products supported

- MCP6N11
- MCP6001
- MCP6V26/7
- PIC18F2553

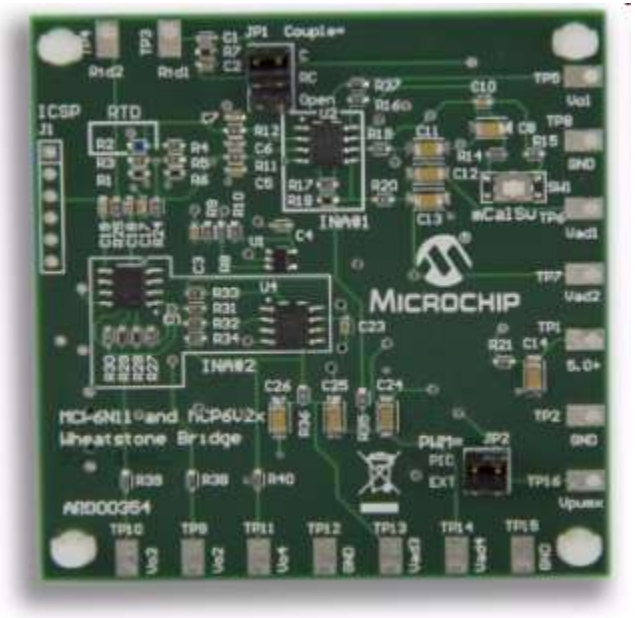

<< BACK

P/N: ARD00354

MCP6421 EMIRR Evaluation Board

Online Info

The MCP6421 EMIRR Evaluation Board is intended to support the electromagnetic interference rejection ratio (EMIRR) measurement and to show the electromagnetic interference (EMI) rejection capability of the MCP6421 operational amplifier.

Products supported

- MCP6421

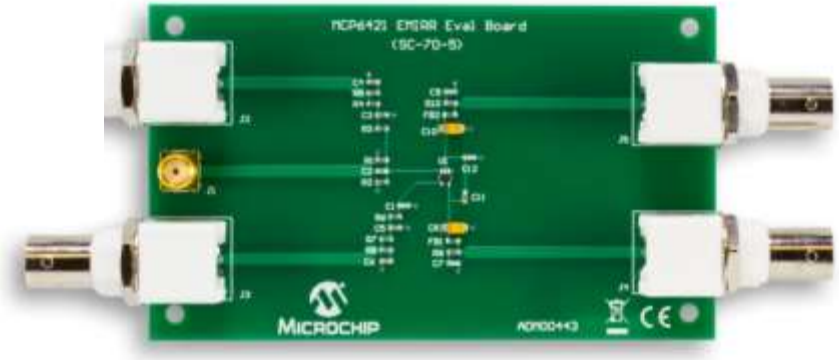

<< BACK

P/N: ADM00443

MCP6N16 Evaluation Board

Online Info

This evaluation board is designed to provide an easy and flexible platform when evaluating the performance of the MCP6N16, a Zero-Drift instrumentation amplifier. The evaluation board is populated with the MCP6N16-100, which is optimized for gains of 100V/V or higher. If one of the other gain option models is desired (e.g. MCP6N16-001 for gain of ≥1V/V, or the MCP6N16-010 for gain of ≥10V/V), exchanging the DUT and adjusting the gain setting resistors can easily be accomplished with standard soldering tools.

The board includes differential input filtering, two jumper selectable gain settings and output filtering, in addition to an external voltage reference circuit to allow for an adjustable output common-mode level shifting.

Products supported

- MCP6N16

<< BACK

P/N: ADM00640

MCP1726 Eval Board

Online Info

The MCP1726 1A LDO Evaluation Board allows the user to evaluate both the fixed and adjustable versions of the part in the 8-pin SOIC and 8-lead 3x3 DFN packages. An on-board potentiometer allows the user to easily set the output voltage of the adjustable voltage version of the device. Status LEDs indicate when input voltage is applied and when the Power Good (PWRGD) output is in a high condition (output voltage is in regulation).

Connection terminals are provided for the input voltage, output voltage, ground, power good and shutdown.

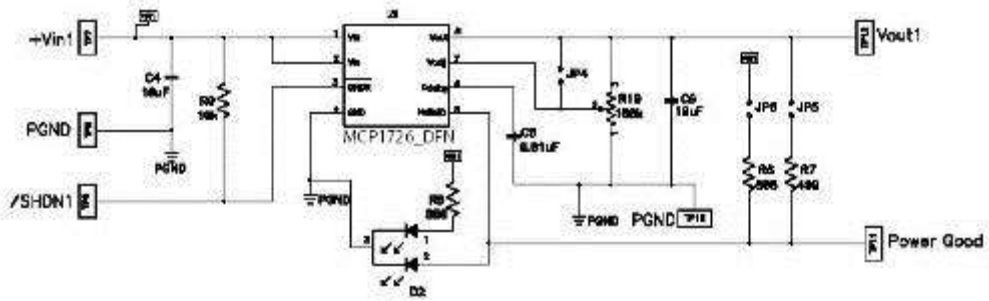

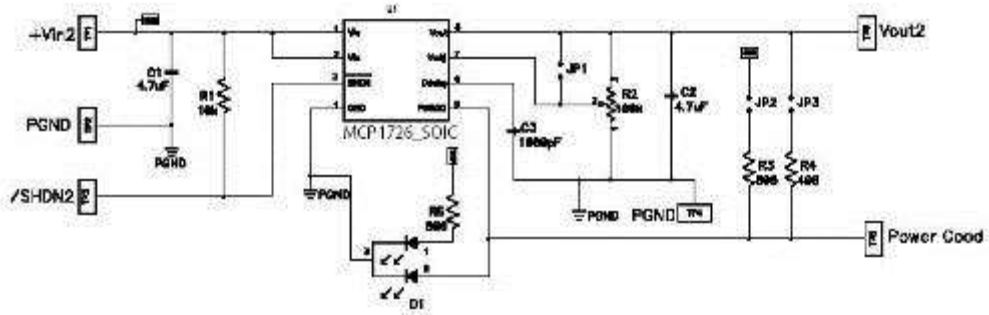

Products supported

- MCP1726

P/N: MCP1726EV

<< BACK

SOT223-5 Voltage Regulator Eval Board

Online Info

The SOT223-5 Voltage Regulator Evaluation Board is designed to be used to facilitate the evaluation of Microchip's voltage regulators or to be used as a standalone voltage regulator board. Jumpers have been placed on the board to facilitate testing of specific voltage regulator parameters. The jumpers may also be used to select pull-up and pull-down voltage levels.

Features:

- Input and Output headers for future connection to Line Step and Load Step modules
- Ample test points to attach multi-meters, power supplies, and loads
- Jumper to select ground current measurement
- Jumper to select input capacitor
- Jumper to select two different load resistors
- Jumper to select shutdown pin input: V_{DD}, GND, or use test point
- Jumper to connect input capacitor to circuit
- SMT0805 PCB footprints for user Power-Good pull-up resistor
- SMT0805 PCB footprints for user Adjustable Voltage resistor divider
- SMT0805 PCB footprints for user Bypass Capacitor

Products supported

- MCP1790
- MCP1824
- MCP1825
- MCP1826

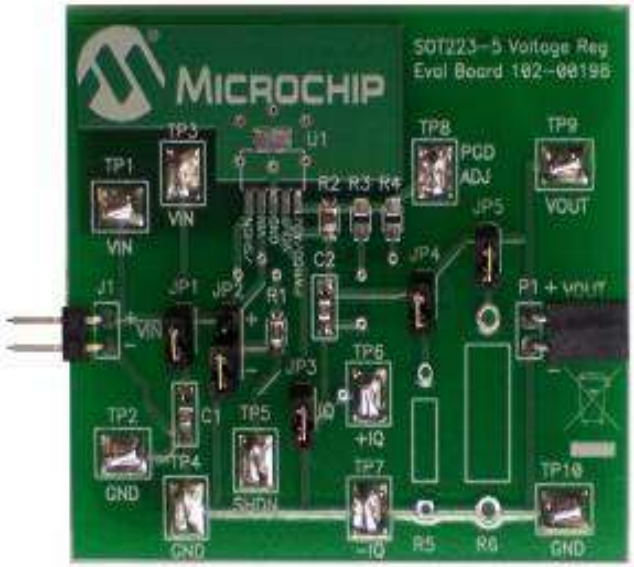

P/N: SOT223-5EV-VREG

<< BACK

SOT23-3 Voltage Regulator Eval Board

Online Info

The SOT23-3 Voltage Regulator Evaluation Board is designed to evaluate and test voltage regulators. By soldering the desired device to the evaluation board, the user can easily validate several parameters of the device.

The SOT23-3 Voltage Regulator Evaluation Board does not come with a voltage regulator soldered onto the board. This allows the user to attach the voltage regulator of their choosing to the board and perform quiescent current, ground current, Power Supply Ripple Rejection (PSRR), and other desired tests.
The SOT23-3 Voltage Regulator Evaluation Board is based upon a modular concept which will allow the user to plug in additional boards to increase the test capability of the voltage regulator.

Features:

- Input and Output headers for future connection to Line Step and Load Step Modules
- Ample test points to attach multimeters, power supplies, and loads
- Jumper to select ground current measurement
- Jumper to connect output load resistor
- Jumper to connect input capacitor to circuit
- Jumper to select one of two device pinouts

Products supported

- MCP1701A
- MCP1702
- MCP1703

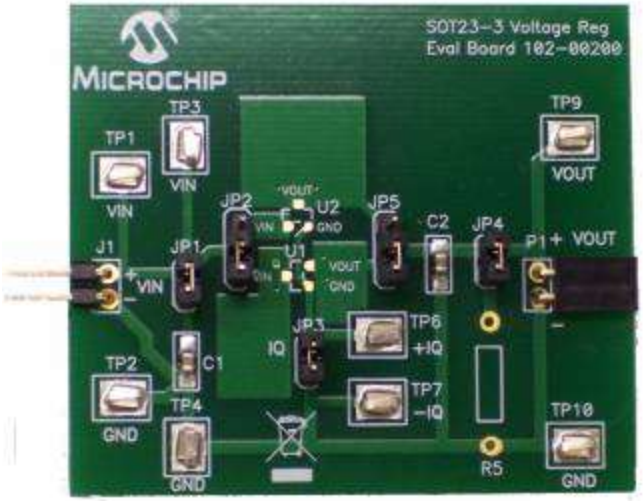

P/N: SOT23-3EV-VREG

<< BACK

TO220-3/TO263-3 Voltage Regulator Eval Board

Online Info

The TO220-3 / TO263-3 Voltage Regulator Evaluation Board is designed to provide functional evaluation of Microchip Voltage Regulators that utilize the TO220-3 and TO263-3 package.
The TO220-3 / TO263-3 Voltage Regulator Evaluation Board does not come with a voltage regulator soldered onto the board. This allows the user to attach the voltage regulator of their choosing to the board and perform quiescent current, ground current, PSRR, and other desired tests.

Products supported

- MCP1790
- MCP1825S
- MCP1826S
- MCP1827S

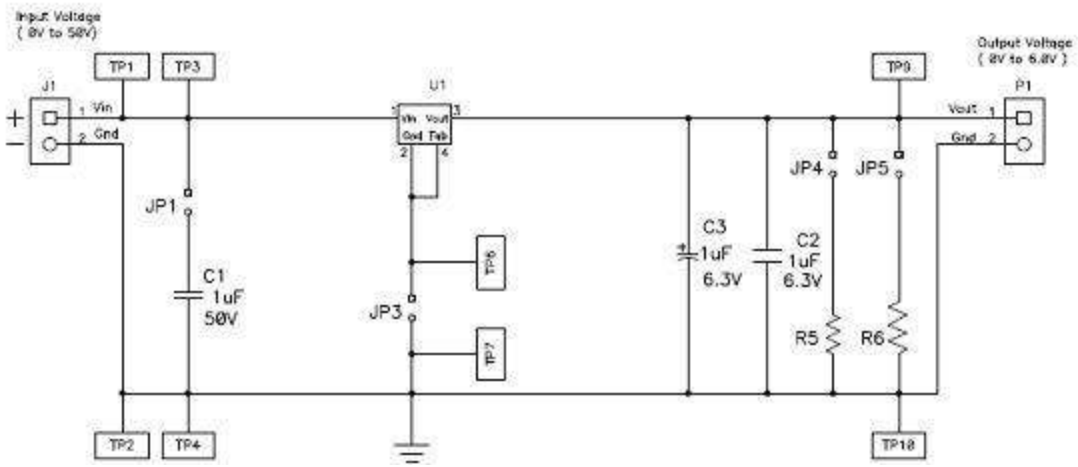

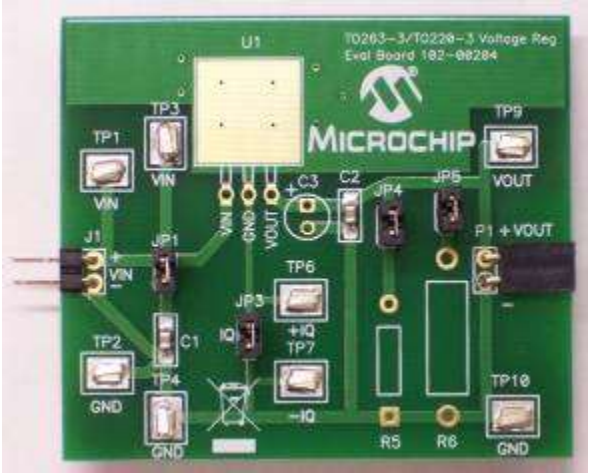

P/N: TO263-3EV-VREG

<< BACK

SOT89-3 Voltage Regulator Eval Board

Online Info

The SOT89-3 Voltage Regulator Evaluation Board is designed to provide functional evaluation of Microchip Voltage Regulators that utilize the SOT89-3 package.
The SOT89-3 Voltage Regulator Evaluation Board does not come with a voltage regulator soldered onto the board. This allows the user to attach the voltage regulator of their choosing to the board and perform quiescent current, ground current, PSRR, and other desired tests.

Products supported

- MCP1700
- MCP1701A
- MCP1702
- MCP1703

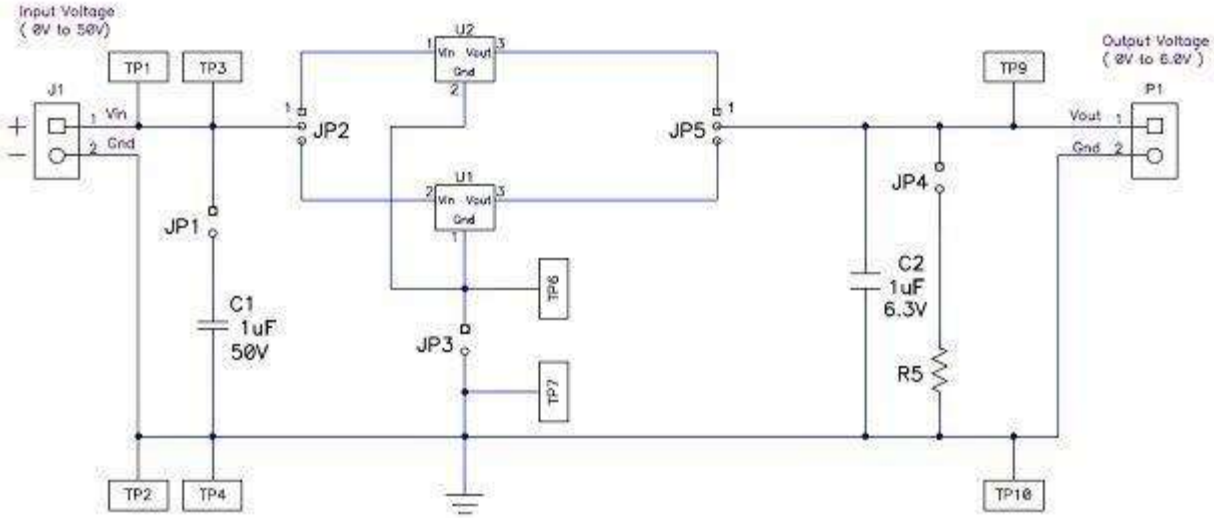

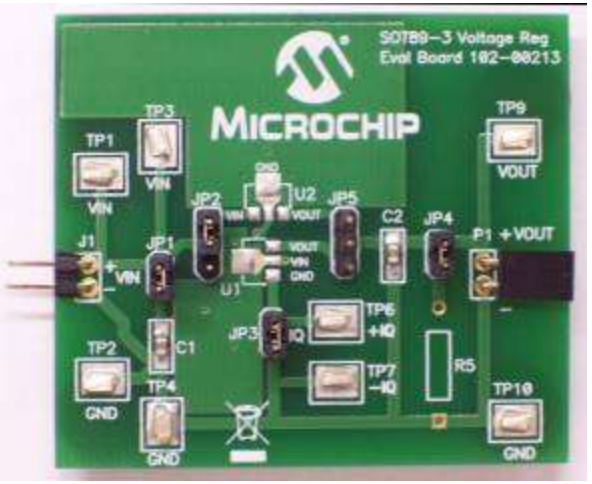

P/N: SOT89-3EV-VREG

<< BACK

TC1016/17 Eval Board

Online Info

The TC1016/TC1017 LDO Evaluation Board is used to evaluate Microchip's TC1016 and TC1017, 80mA and 150mA, Low-Dropout (LDO) regulators. This evaluation board contains one circuit for the 5-pin SC-70 package (3.0V output voltage device) and one for the 5-pin SOT-23 package (1.8V output voltage device). Any output voltage version of either device can be used in both circuits. Both LDOs on the TC1016/TC1017 LDO Evaluation Board are the TC1017 devices.

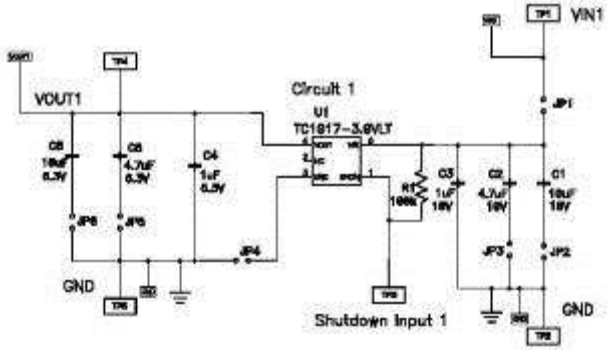

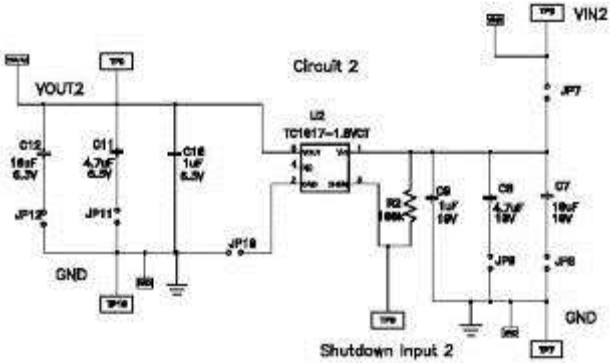

Products supported

- TC1016
- TC1017

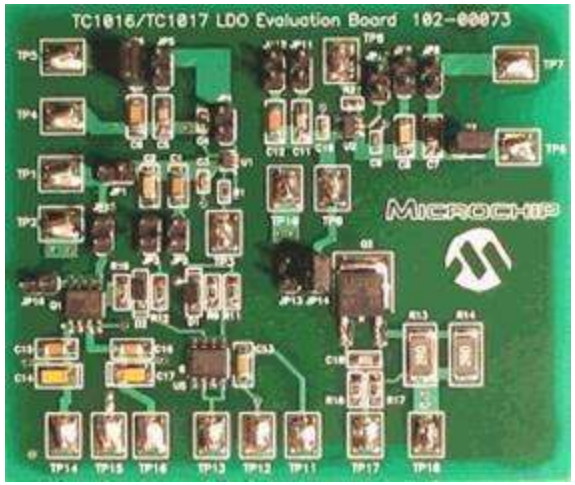

P/N: TC1016/17EV

<< BACK

MIC38150 Evaluation Board

Online Info

The MIC38150 is a 1.5A continuous output current step down converter. This is a follow on product in the new High Efficiency Low DropOut Regulators (HELDO®) family, that provide the benefits of an LDO with respect to ease of use, fast transient performance, high PSRR and low noise while offering the efficiency of a switching regulator.

Products supported

- MIC38150

P/N: MIC38150HYHL-EV

<< BACK

MIC38300 Evaluation Board

Online Info

The MIC38300 is a 3A peak, 2.2A continuous output current step down converter. This is the first device in a new generation of High Efficiency Low Dropout (HELDO®) regulators that provide the benefits of an LDO in respect to ease of use, fast transient performance, high PSRR and low noise while offering the efficiency of a switching regulator.

Products supported

- MIC38300

P/N: MIC38300HYHL-EV

<< BACK

MIC47100 Evaluation Board

Online Info

The MIC47100 is a high speed, low V_{IN} LDO capable of delivering up to 1A and designed to take advantage of point-of-load applications that use multiple supply rails to generate a low-voltage, high-current power supply.

The MIC47100 has an NMOS output stage offering very low output impedance. The NMOS output stage offers a unique ability to respond very quickly to sudden load changes such as that required by a microprocessor, DSP, or FPGA. The MIC47100 consumes little quiescent current and therefore can be used for driving the core voltages of mobile processors, post regulating a core DC/DC converter in any portable device.

Products supported

- MIC47100

P/N: MIC47100YML-EV

<< BACK

MIC49200 Evaluation Board

Online Info

The MIC49200 is a high-bandwidth, low-dropout, 2A voltage regulator ideal for powering core voltages of low-power microprocessors. The MIC49200 implements a dual supply configuration allowing for very low output impedance and very fast transient response.

The MIC49200 requires a bias input supply and a main input supply, allowing for ultra-low input voltages on the main supply rail. The input supply operates from 1.4V to 6.5V and the bias supply requires between 3V and 6.5V for proper operation. The MIC49200 offers fixed output voltages from 0.9V to 1.8V and adjustable output voltages down to 0.9V.

Products supported

- MIC49200

P/N: MIC49200WR-EV

<< BACK

MIC5165 Evaluation Board

Online Info

The MIC5165 is a dual regulator controller designed specifically for low-voltage memory termination applications such as DDR3 and GDDR3/4/5. The MIC5165 offers a simple, low-cost JEDEC-compliant solution for terminating high-speed, low-voltage digital buses with a Power Good (PG) signal.

The MIC5165 controls two external N-Channel MOSFETs to form two separate regulators. It operates by switching between either the high-side MOSFET or the low-side MOSFET, depending on whether the current is being sourced to the load or being sunk by the regulator.

Products supported

- MIC5165

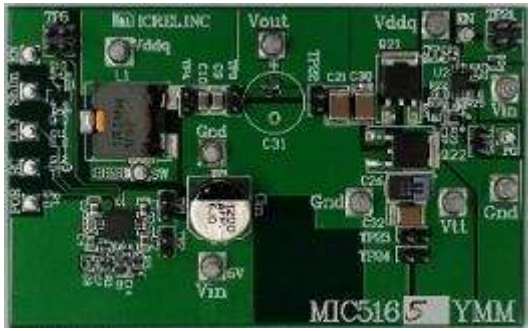

P/N: MIC5165YMM-EV

<< BACK

MIC5166 Evaluation Board

Online Info

The MIC5166 is a 3A, high-speed, linear, low V_{IN}, double data rate (DDR), memory terminator power supply. The part is small and requires small output capacitors making it a tiny overall solution. This allows it to be conveniently placed close to the DDR memory, minimizing circuit board layout inductance which may cause excessive voltage ripple at the DDR memory.

The MIC5166 contains a precision voltage divider network in order to take in the V_{DDQ} voltage as a reference voltage and conveniently output the terminator voltage (V_{TT}) at one half of the V_{DDQ} input voltage.

Products supported

- MIC5166

P/N: MIC5166YML-EV

<< BACK

MIC5234 Evaluation Board

Online Info

The MIC5234 is a low-quiescent current, µCap low-dropout regulator. With a maximum operating input voltage of 30V and quiescent current of 20µA, it is ideal for supplying keep-alive power in systems with high-voltage batteries.

Capable of 150mA output, the MIC5234 has a dropout voltage of only 320mV. It can also survive an input transient of -20V to +32V. The MIC5234 requires only a 2.2µF output capacitor for stable operation.

Products supported

- MIC5234

P/N: MIC5234YME-EV

<< BACK

MIC59150 Evaluation Board

Online Info

The MIC59150 is a high-bandwidth, low-dropout, 1.5A linear voltage regulator ideal for powering core voltages of low-power microprocessors. The MIC59150 implements a dual supply configuration allowing for a very low output impedance and a very fast transient response.

The MIC59150 requires a bias input supply and a main input supply, allowing for ultra-low input voltages on the main supply rail. The device operates from an input supply of 1.0V to 3.8V and bias supply between 3V and 5.5V. The MIC59150 offers adjustable output voltages down to 0.5V.

Products supported

- MIC59150

P/N: MIC59150YME-EV

<< BACK

MIC59300 Evaluation Board

Online Info

The MIC59300 is a high-bandwidth, low-dropout, 3A linear voltage regulator ideal for powering core voltages of low-power microprocessors. The MIC59300 implements a dual supply configuration allowing for a very low output impedance and a very fast transient response.

The MIC59300 requires a bias input supply and a main input supply, allowing for ultra-low input voltages on the main supply rail. The device operates from an input supply of 1.0V to 3.8V and bias supply between 3V and 5.5V. The MIC59300 offers fixed output voltages and adjustable output voltages down to 0.5V.

Products supported

- MIC59300

P/N: MIC59300YME-EV

<< BACK

MIC68400 Evaluation Board

Online Info

The MIC68400 is a high peak current LDO regulator designed specifically for powering applications such as FPGA core voltages that require high start up current with lower nominal operating current. Capable of sourcing 4A of current for start-up, the MIC68400 provides high power from a small MLF® lead-less package. The MIC68400 can also implement a variety of power-up and power-down protocols such as sequencing, tracking, and ratiometric tracking.

Products supported

- MIC64200

P/N: MIC68400YML-EV

<< BACK

MIC69103 Evaluation Board

Online Info

The MIC69101/103 is the 1A output current member of the MIC69xxx family of high-current, low-voltage regulators that support currents of 1A, 1.5A, 3A, and 5A. The MIC69101/103 operates from a single low voltage supply, yet offers high precision and ultra-low dropout of 500mV under worst case conditions.

The MIC69101/103 operates from an input voltage of 1.65V to 5.5V. It is designed to drive digital circuits requiring low voltage at high currents (i.e. PLDs, DSP, microcontroller, etc.). These regulators are available in adjustable and fixed output voltages including 1.8V. The adjustable version can support output voltages down to 0.5V.

Products supported

- MIC69103

P/N: MIC69103YML-EV

<< BACK

MIC69153 Evaluation Board

Online Info

The MIC69153 is the 1.5A output-current member of the MIC69xxx family of high current, low voltage regulators that support currents of 1A, 1.5A, 3A, and 5A. The MIC69153 operates from a single low voltage supply, yet offers high precision and ultra-low dropout of 500mV under worst case conditions.

The MIC69153 operates from an input voltage of 1.65V to 5.5V. It is designed to drive digital circuits requiring low voltage at high currents (i.e. PLDs, DSP, microcontroller, etc.). These regulators are available in adjustable and fixed output voltages including 1.8V. The adjustable version can support output voltages down to 0.5V.

Products supported

- MIC69153

P/N: MIC69153YML-EV

<< BACK

MIC69302 Evaluation Board

Online Info

The MIC69302 is the 3A output current member of the MIC69xxx family of high-current, low-voltage regulators, which support currents of 1A, 1.5A, 3A, and 5A. This family operates from a single low voltage supply, yet offers high precision and ultra-low dropout of 500mV under worst case conditions.

The MIC69302 operates from an input voltage of 1.65V to 5.5V. It is designed to drive digital circuits requiring low voltage at high currents (i.e., PLDs, DSP, microcontroller, etc.). These regulators are available in adjustable and fixed output voltages. The adjustable version can support output voltages down to 0.5V.

Products supported

- MIC69302

P/N: MIC69302WR-EV

<< BACK

MIC69502 Evaluation Board

Online Info

The MIC69502 is a 5A, low dropout linear regulator that provides low-voltage, high-current outputs with a minimum of external components. It offers high precision and ultra-low dropout of 500mV under worst case conditions.

The MIC69502 operates from an input voltage of 1.65V to 5.5V. It is designed to drive digital circuits requiring low voltage at high currents (i.e. PLDs, DSP, microcontroller, etc.). The MIC69502 output is adjustable to a min of 0.5V.

The µCap design of the MIC69502 is optimized for stability with low value, low-ESR ceramic output capacitors.

Products supported

- MIC69502

P/N: MIC69502WR-EV

<< BACK

MIC5167 Evaluation Board

Online Info

The MIC5167 is a high-efficiency, 6A, integrated switch, synchronous buck (step-down) regulator designed for use as a double data rata (DDR) or quad data rate (QDR) terminator. The MIC5167 is optimized for highest efficiency, achieving more than 94% efficiency while still switching at 1MHz over a broad range. The device works with a small 0.4µH inductor and 300µF output capacitor. The ultra-high speed control loop keeps the output voltage within regulation even under extreme transient load swings commonly found in FPGAs and low-voltage ASICs.

The output voltage is controlled externally by input to the VDDQ pin. The output voltage is one-half the voltage applied to the VDDQ pin. The output voltage can be adjusted down to 0.6V to address low voltage power needs. The MIC5167 will source 6A and sink up to 6A.

Products supported

- MIC5167

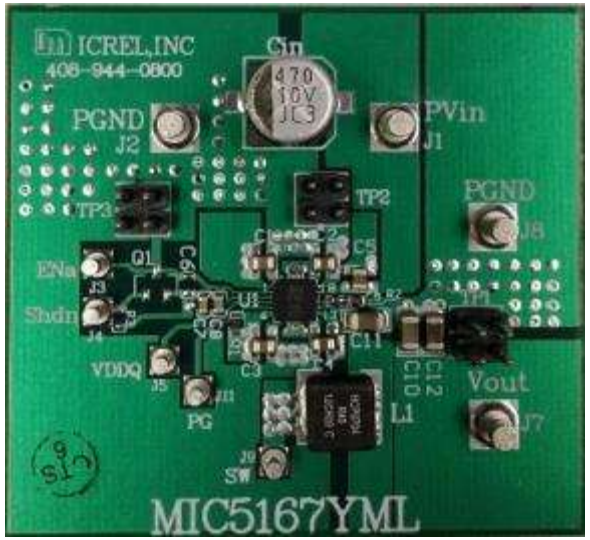

P/N: MIC5167YML-EV

<< BACK

MAQ5280 Evaluation Board

Online Info

The MAQ5280 is a high performance, linear regulator, offering a very low noise output with a very wide input voltage operating range, from 4.5V to 120V DC input voltage.

Ideal for high input voltage applications such as automotive and telecom, the MAQ5280 offers 2% initial accuracy, extremely high power supply rejection ratio (PSRR > 80dB) and low ground current (typically 31µA). The MAQ5280 can also be put into a zero-off-mode current state, drawing minuscule amount of current when disabled.

The MAQ5280 has a very wide input voltage range, with DC rated from –24V to +120V. This wide input range covers the automotive load dump range and the MAQ5280 is optimized for line transient response, making it ideal for harsh environment applications.

The MAQ5280 evaluation board requires an input power source that is able to deliver greater than 0.1A at +120VDC.

Products supported

- MAQ5280

P/N: MAQ5280YME-EV

<< BACK

MIC5280 Evaluation Board

Online Info

The MIC5280 is a high performance, low dropout regulator, offering a very low noise output with a very wide input voltage operating range, up to 120V DC input voltage.

Ideal for high input voltage applications such as industrial and telecom, the MIC5280 offers 2% initial accuracy, extremely high power supply rejection ratio (PSRR >80dB) and low ground current (typically 31µA). The MIC5280 can also be put into a zero off-mode current state, drawing a minuscule amount of current when disabled.

Products supported

- MIC5280

P/N: MIC5280YME-EV

<< BACK

MIC5380 Evaluation Board

Online Info

The MIC5380/1 is an advanced dual LDO ideal for powering space constrained portable devices.

Ideal for battery powered applications, the MIC5380/1 offers ±1% typical accuracy, low dropout voltage (155mV at 150mA) and low ground current. The MIC5380/1 can also be put into a zero off-mode current state, drawing virtually no current when disabled.

Products supported

- MIC5380

P/N: MIC5380-MGYFT-EV

<< BACK

MIC47050 Evaluation Board

Online Info

The MIC47050 is a high-speed, ultra-low dropout, dual-supply NMOS ULDO™ designed to take advantage of point-of-load applications that use multiple supply rails to generate a low-voltage, high-current power supply. The MIC47050 can source 500mA of output current while only requiring a 1µF ceramic output capacitor for stability. A 1.5% output voltage accuracy, low dropout voltage (44mV at 500mA), and low ground current makes this device ideally suited for mobile and point-of-load applications.

The MIC47050 has an NMOS output stage offering very low output impedance. The NMOS output stage makes for a unique ability to respond very quickly to sudden load changes such as those required by a microprocessor, DSP or FPGA. The MIC47050 consumes little quiescent current and can be used for driving the core voltages of mobile processors, post regulating a core DC/DC converter in any processor.

Products supported

- MIC47050

P/N: MIC47050YML-EV

<< BACK

MIC5301 Evaluation Board

Online Info

The MIC5301 is a high performance, single output ultra-low LDO (ULDO) regulator, offering low total output noise. The MIC5301 is capable of sourcing 150mA output current and offers high PSRR and low output noise, making it an ideal solution for RF applications.
For battery-operated applications, the MIC5301 offers 2% accuracy, extremely low dropout voltage (40mV at 150mA), and low ground current (typically 85µA total). The MIC5301 can also be put into a zero off-mode current state, drawing no current when disabled.

Products supported

- MIC5301

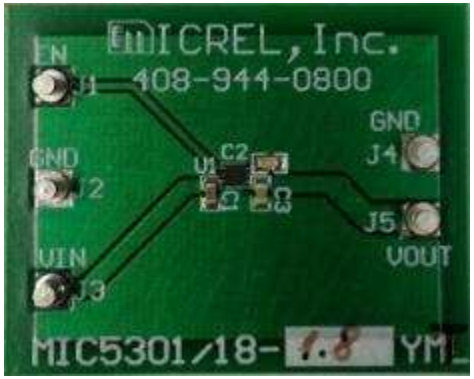

P/N: MIC5301-1.8YMT-EV
MIC5301-3.3YMT-EV

<< BACK

MIC5308 Evaluation Board

Online Info

The MIC5308 is a high performance, µCap low dropout regulator, offering ultra-low operating current while maintaining very fast transient response. The MIC5308 can source up to 150mA of output current and can regulate down from a low input supply voltage to increase system efficiency.

Ideal for battery-operated applications; the MIC5308 offers extremely low dropout voltage (45mV typically at 150mA) and low ground current at all load conditions (typically 23µA). The MIC5308 can also be put into a zero off-mode current state, drawing virtually no current when disabled.

Products supported

- MIC5308

P/N: MIC5308-1.8YMT-EV

<< BACK

MIC5309 Evaluation Board

Online Info

The MIC5309 is a high performance, µCap low dropout regulator that offers ultra-low operating current while maintaining very fast transient response. The MIC5309 can source up to 300mA of output current and can regulate down from a low input supply voltage to increase system efficiency.

Ideal for battery-operated applications; the MIC5309 offers extremely low dropout voltage (100mV typically at 300mA load) and low ground current at all load conditions (typically 23µA). The MIC5309 can also be put into a zero off-mode current state, drawing virtually no current when disabled.

Products supported

- MIC5309

P/N: MIC5309-1.2YMT-EV

<< BACK

MIC5365 Evaluation Board

Online Info

The MIC5365 is an advanced general purpose linear regulator offering high power supply rejection (PSRR) in an ultra-small 1mm x 1mm package. The MIC5365 is capable of sourcing 150mA output current and offers high PSRR, making it a great solution for any portable electronic application.

Ideal for battery-powered applications, the MIC5365 offers 2% initial accuracy, low dropout voltage (180mV at 150mA), and low ground current (typically 32µA). The MIC5365 can also be put into a zero off-mode current state, drawing virtually no current when disabled.

Products supported

- MIC5365

P/N: MIC5365-1.8YMT-EV
MIC5365-3.0YMT-EV

<< BACK

MIC7400 Evaluation Board

Online Info

The MIC7400 is a powerful, highly-integrated, configurable, power-management IC (PMIC) featuring five synchronous buck regulators, one boost regulator and high-speed I2C interface with an internal EEPROM. The device offers two distinct modes of operation “standby mode” and “normal mode”. In normal mode, the programmable switching converters can be configured to support a variety of features, including start-up sequencing, timing, soft-start ramp, output voltage levels, current-limit levels, and output discharge for each channel. In standby mode the PMIC can configured in a low power state by either disabling an output or by changing the output voltage to a lower level. Independent exit from standby mode can be achieved either by I2C communication or the external STBY pin.

Products supported

- MIC7400

P/N: MIC7400YFL-EV

<< BACK

MIC7401 Evaluation Board

Online Info

The MIC7401 is a powerful, highly-integrated, configurable, power-management IC (PMIC) featuring five synchronous buck regulators, one boost regulator, and high-speed I2C interface with an internal EEPROM and micro-power shutdown. The device offers two distinct modes of operation “standby mode” and “normal mode”. In normal mode, the programmable switching converters can be configured to support a variety of features, including start-up sequencing, timing, soft-start ramp, output voltage levels, current-limit levels, and output discharge for each channel. In standby mode the PMIC can configured in a low power state by either disabling an output or by changing the output voltage to a lower level. Independent exit from standby mode can be achieved either by I2C communication or the external STBY pin.

Products supported

- MIC7401

P/N: MIC7401YFL-EV

<< BACK

MIC23099 Evaluation Board

Online Info

The MIC23099 is a high-efficiency, low-noise, dual-output, integrated power-management solution for single-cell alkaline or NiMH battery applications. The synchronous boost output voltage (V_{OUT1}) is enabled first and is powered from the battery. Next the synchronous buck output (V_{OUT2}), which is powered from the boost output voltage, is enabled. This configuration allows V_{OUT2} to be independent of battery voltage, thereby allowing the buck output voltage to be higher or lower than the battery voltage.

The MIC23099 evaluation board requires only a single power supply with at least 1A current capability. The output load can either be an active (electronic) or passive (resistive) load.

Products supported

- MIC23099

P/N: MIC23099YFT-EV

<< BACK

MIC23450 Evaluation Board

Online Info

This board enables evaluation of the MIC23450, a fully-integrated, triple-output, 2A, 3MHz switching regulator that features HyperLight Load mode and power (PG) output indicators. The MIC23450 is highly efficient throughout the output current range, drawing just 23µA of quiescent current for each channel in operation.

Products supported

- MIC23450

P/N: MIC23450-AAAYML-EV

<< BACK

MIC23451 Evaluation Board

Online Info

The MIC23451 is a high-efficiency, 3MHz, triple 2A, synchronous buck regulator with HyperLight Load® mode. HyperLight Load provides very-high efficiency at light loads and ultra-fast transient response, which is ideal for supplying processor core voltages. An additional benefit of this proprietary architecture is very low output ripple voltage throughout the entire load range with the use of small output capacitors.

Products supported

- MIC23451

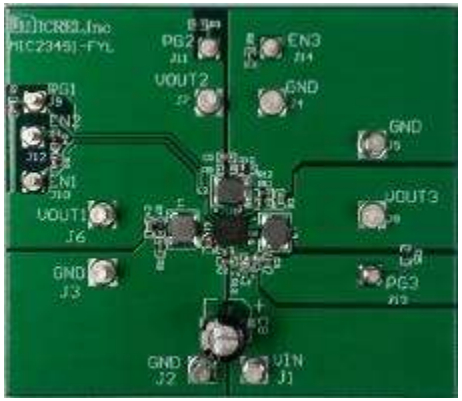

P/N: MIC23451-AAAYFL-EV

<< BACK

MCP1256/7/8/9 Eval Board

Online Info

The MCP1256/7/8/9 Charge Pump Evaluation Board is an evaluation and demonstration tool for Microchip Technology's MCP1256/7/8/9 Regulated 3.3V Low-Ripple Charge Pumps with low-operating current SLEEP mode or BYPASS mode. The design provides for dynamic versatility.

Products supported

- MCP1256
- MCP1257
- MCP1258
- MCP1259

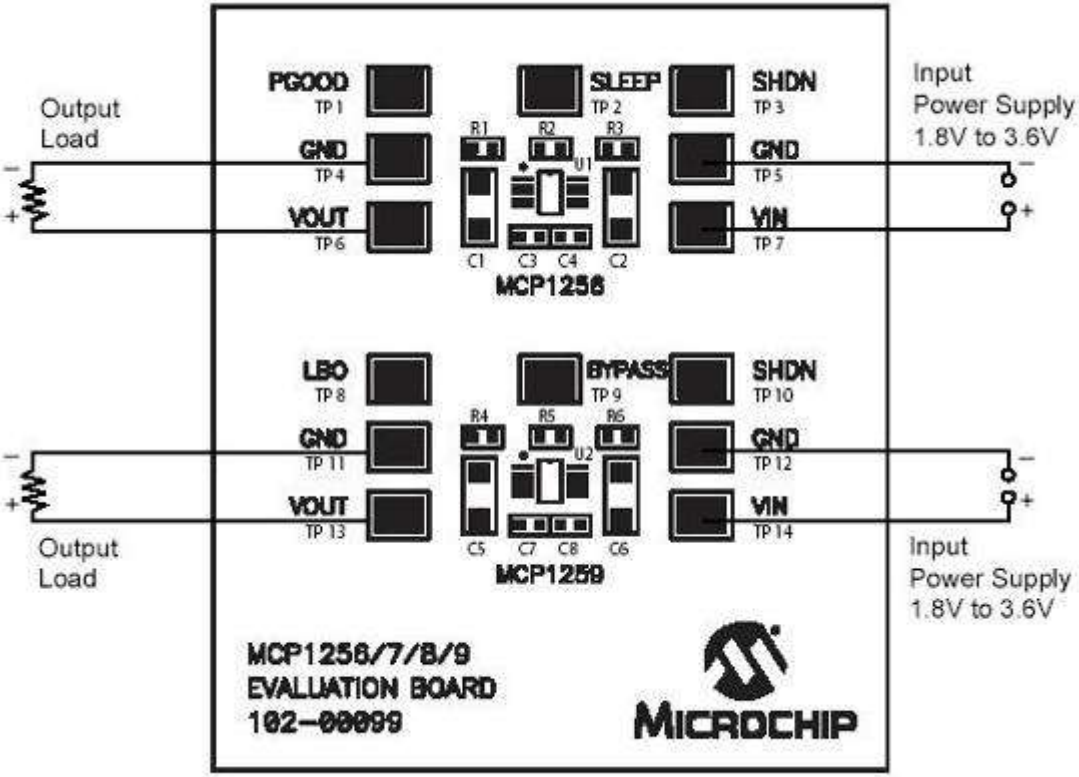

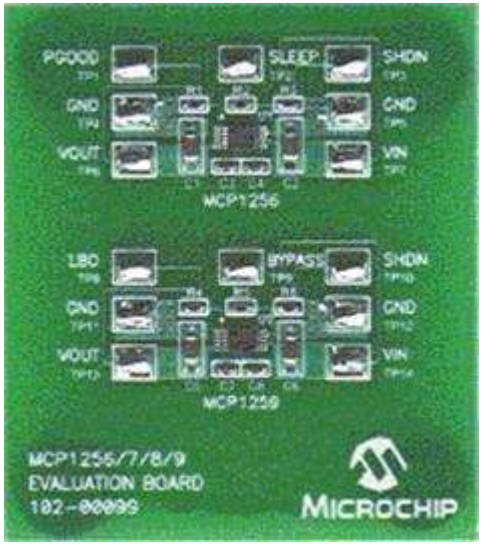

<< BACK

P/N: MCP1256/7/8/9EV

MCP1252 Backlight Demo Board

Online Info

The MCP1252 Charge Pump Backlight LED Demo Board demonstrates the use of a charge pump device in a LED application. The board also serves as a platform to evaluate the MCP1252 device generally.

Products supported

- MCP1252

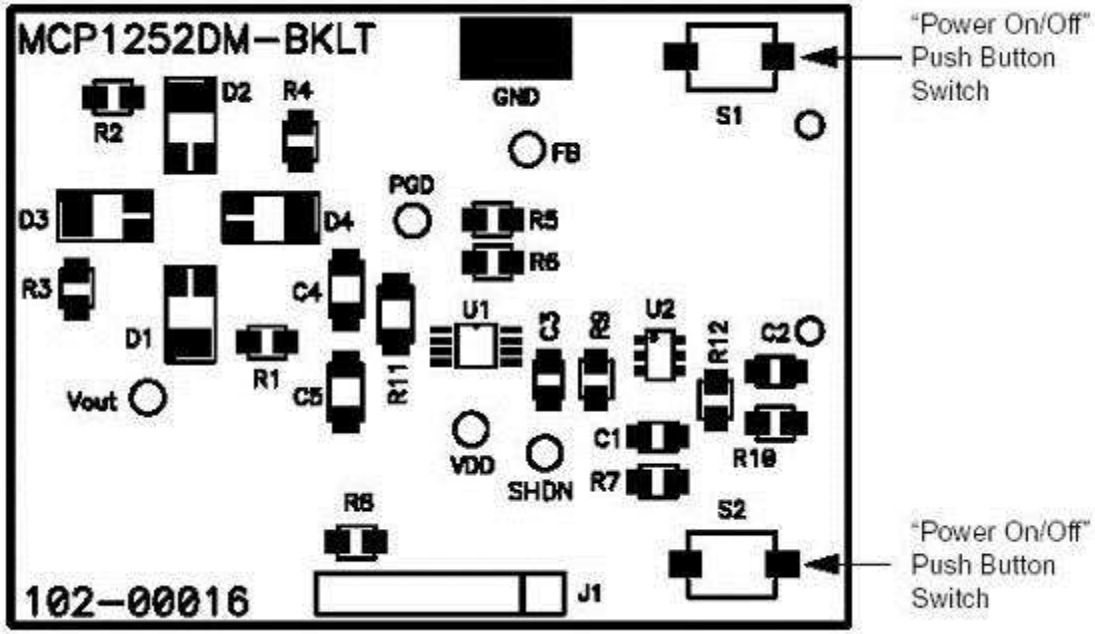

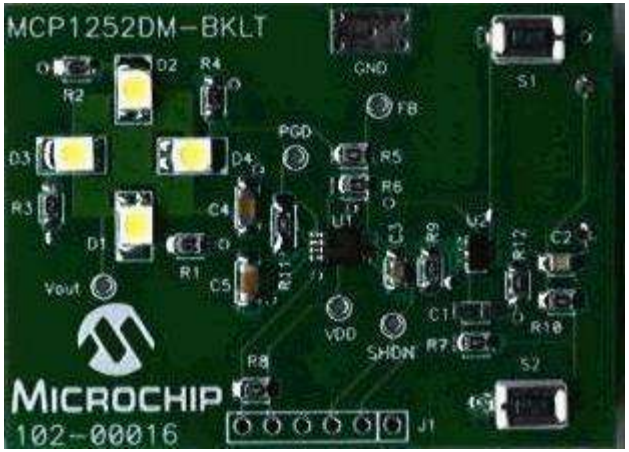

<< BACK

P/N: MCP1252DM-BKLT

MCP1252/3 Eval Board

Online Info

The MCP1252/3 Evaluation Board is an evaluation kit designed to support Microchip's MCP1252*33X50, MCP1252-ADJ, MCP1253-33X50 and MCP1253-ADJ low noise, positive-regulated charge pump devices.

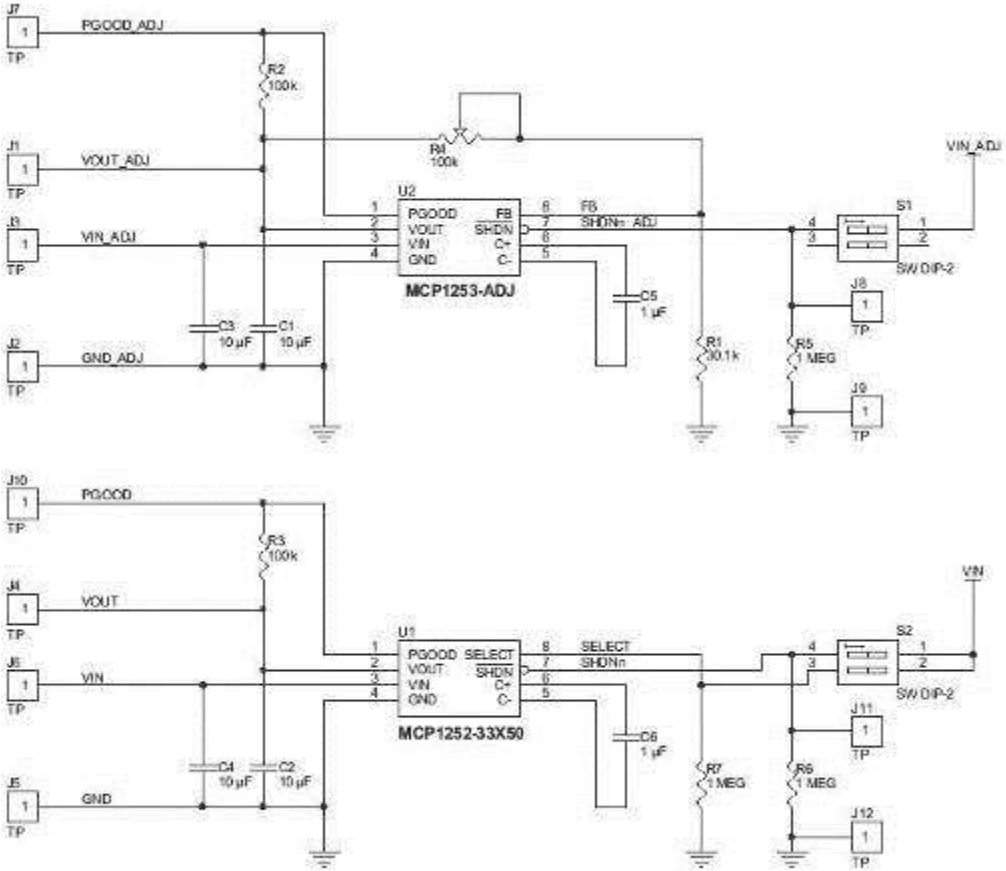

Products supported

- MCP1252
- MCP1253

<< BACK

P/N: MCP1252/3EV

MCP1612 Eval Board

Online Info

The MCP1612 is a 1A, 1.4 MHz, fully integrated buck regulator. The output voltage is selectable from 0.8V to V_{IN} by use of an external resistor divider.

The MCP1612 Evaluation Board contains two independent buck regulators featuring the 8-pin MSOP and 8-pin DFN packages. The output voltage is set to one of eight different preset values (four per regulator circuit) by use of a two-position DIP switch. Each regulator circuit can supply an output current of 0 to 1A.

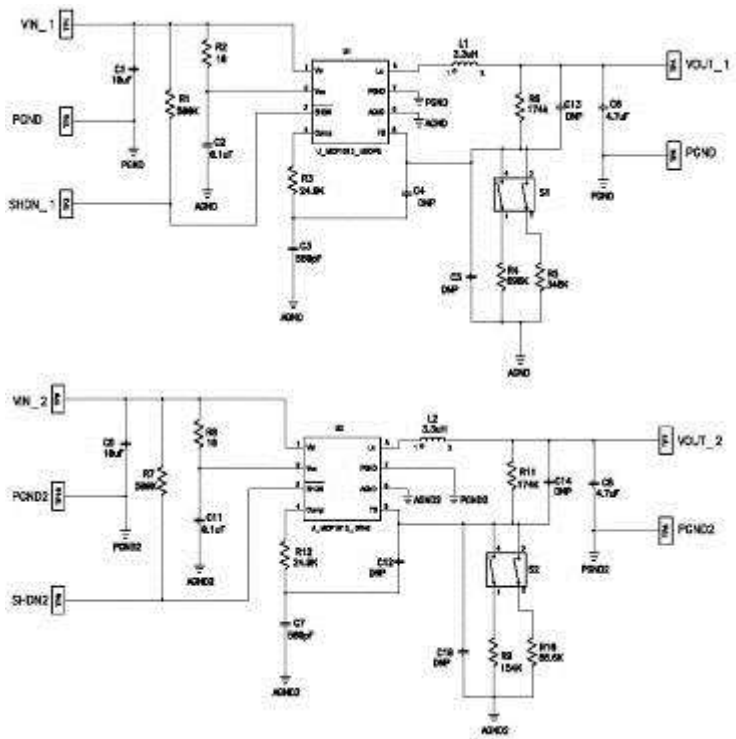

Products supported

- MCP1612

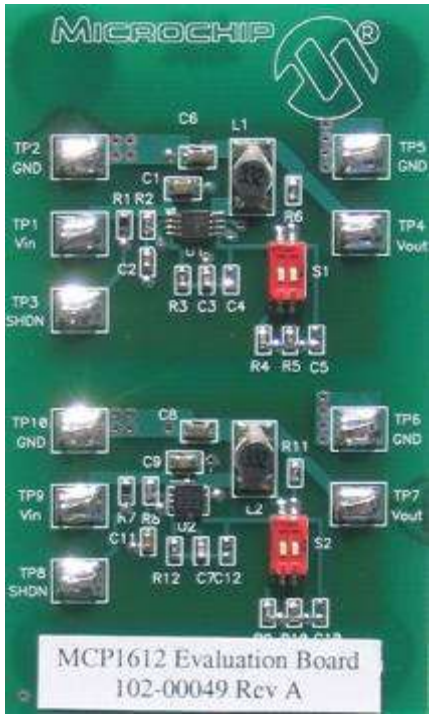

<< BACK

P/N: MCP1612EV

MCP1601 Eval Board

Online Info

The MCP1601 is a 500mA synchronous buck regulator. Both the high-side buck P-channel and the low-side N-channel switches are integrated within the device. The integrated synchronous switch makes the MCP1601 very efficient, even when converting unregulated input voltages to low-voltage, fixed outputs. This evaluation board is designed for a wide range of output voltages and currents. For specific applications, smaller inductors, shielded inductors, tantalum capacitors and different output voltage settings can improve the total DC/DC converter performance and cost.

Products supported

- MCP1601

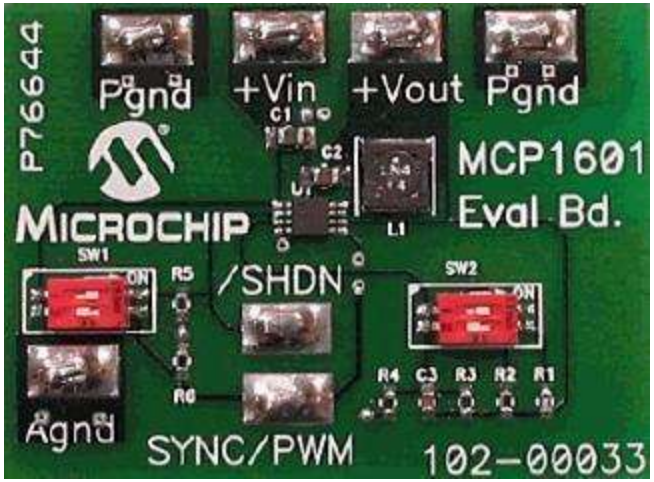

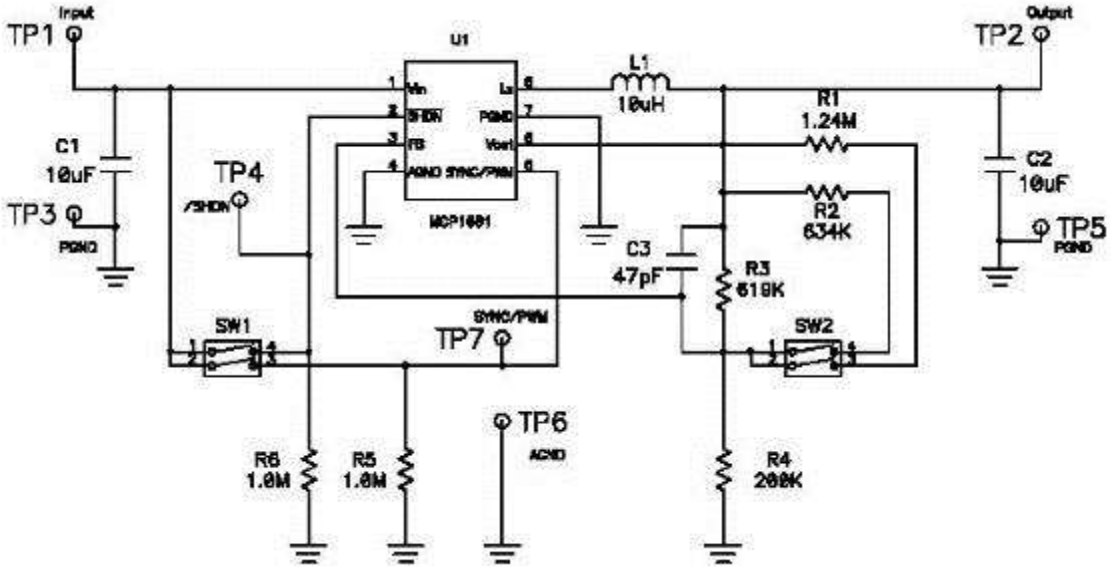

<< BACK

P/N: MCP1601EV

MCP1602 Buck Converter Eval Board

Online Info

The MCP1602 Evaluation Board demonstrates the features and capabilities of Microchip's MCP1602 Evaluation Board 500mA PFM/PWM Synchronous Buck Regulator. The MCP1602 is a step-down (Buck) switching regulator with a Power-Goodmonitor to provide a highly integrated solution for systems that require supply voltagebetween 0.8V to 4.5V. The MCP1602 requires input voltage range from 2.7V to 5.5V.The MCP1602 Evaluation Board includes a MCP1602 circuit that has a Shutdown featureand a 4-position Dip Switch to select between different output voltages. MCP1602Evaluation Board is available in 0.8V, 1.2V, 1.8V, 2.5V and 3.3V. Additional test pointsare available on the MCP1602 Evaluation Board for reviewing the performances andfeatures of MCP1602 Evaluation Board.

Products supported

- MCP1602

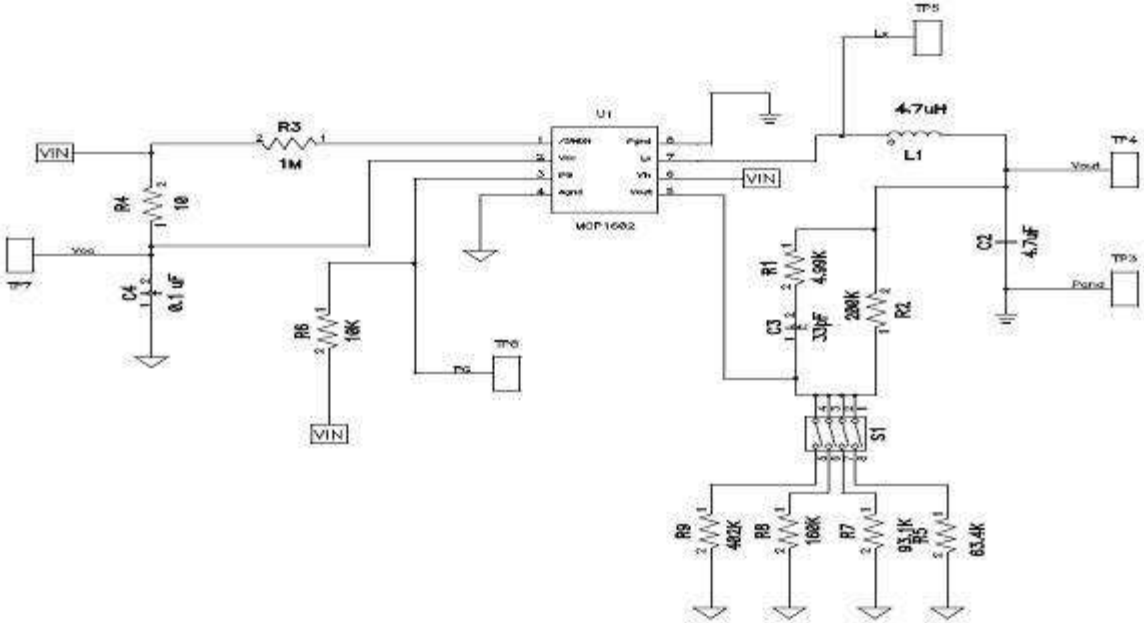

<< BACK

P/N: MCP1602EV

MCP1603 Buck Converter Eval Board

Online Info

The MCP1603 Buck Converter Evaluation Board is designed to demonstrate Microchip's MCP1603 in an adjustable output voltage configuration. The MCP1603 is a 500mA synchronous buck regulator that features both Pulse Frequency Modulation (PFM) and Pulse Width Modulation (PWM). The PFM mode is used at light loads to improve system efficiency, while the 2.0 MHz PWM mode is entered at heavy loads. The transition between PFM and PWM modes automatically occurs without any external intervention. The MCP1603 is available in both adjustable parts that require an external divider to set the output voltage and fixed output voltage parts.

Features:

- Compact size and low profile 500mA Converter design
- Wide Input voltage range from 2.7V to 5.5V
- Five different output voltage settings: 0.8V, 1.8V, 2.5V, and 3.3V
- Test points for connecting input voltage source and external load

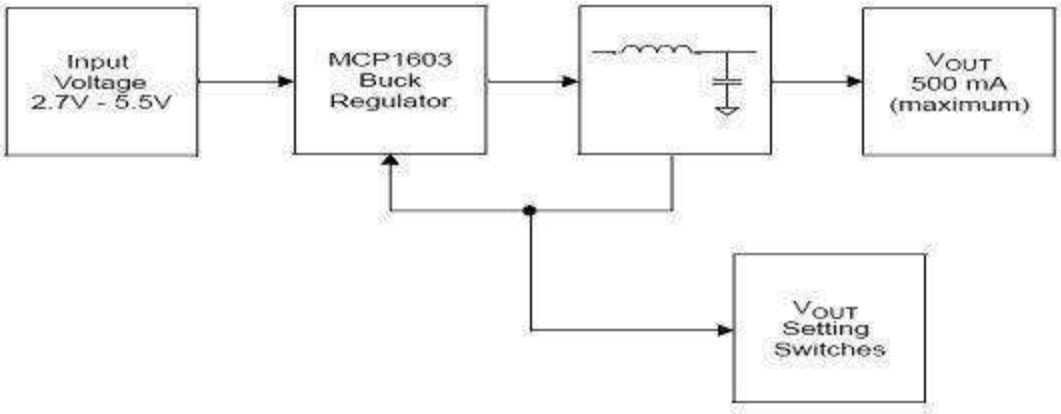

Products supported

- MCP1603

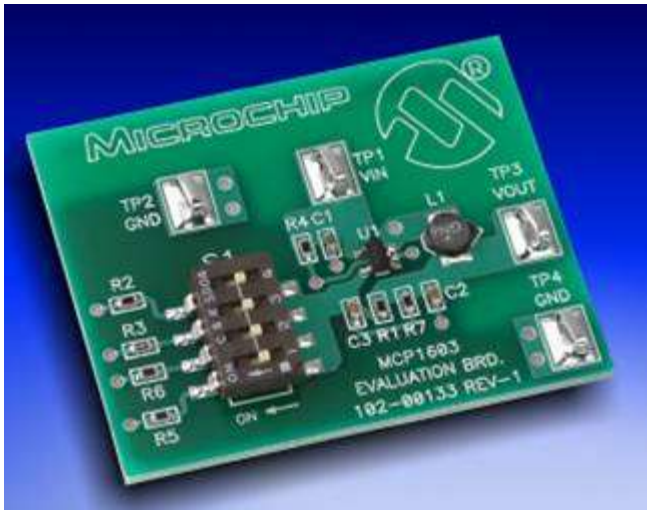

<< BACK

P/N: MCP1603EV

MCP1603 Tiny Reference Design Board

Online Info

The MCP1603 Tiny Reference Design Board demonstrates the use of Microchip's MCP1603 device in a step-down application. The evaluation board is a fully functional platform to evaluate the MCP1603 buck regulator over the input voltage, output voltage and current range of the device. The evaluation board is designed to show off one of the main advantages of MCP1603 – its small size. Test points are provided to allow easy connection of the input voltage source and the output load.

Products supported

- MCP1603

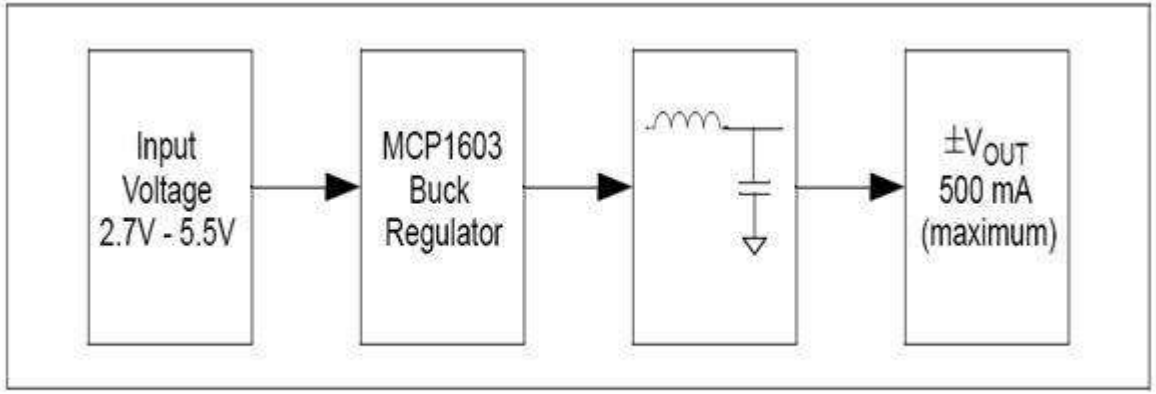

MCP1603 Tiny Reference Design Block Diagram.

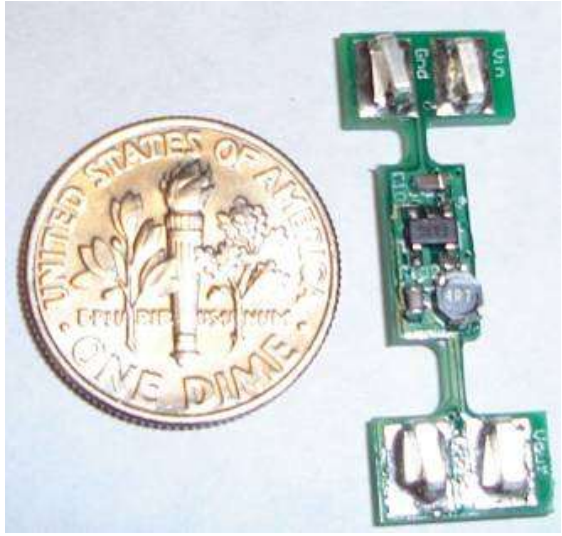

<< BACK

P/N: MCP1603RD-TNY

MCP16301 High Voltage Buck Converter Demo Board

Online Info

MCP16301 High Voltage Buck Converter 600 mA Demo Board supports the development of MCP16301 device. The MCP16301 is a highly integrated, high-efficiency, fixed frequency, step-down DC-DC converter in a popular 6-pin SOT23 package that operates from input voltage sources up to 30V. Integrated features include a high-side switch, fixed-frequency peak-current mode control, internal compensation, peak current limit and over-temperature protection. Minimal external components are necessary to develop a complete step-down DC-DC converter power supply.

Products supported

- MCP16301

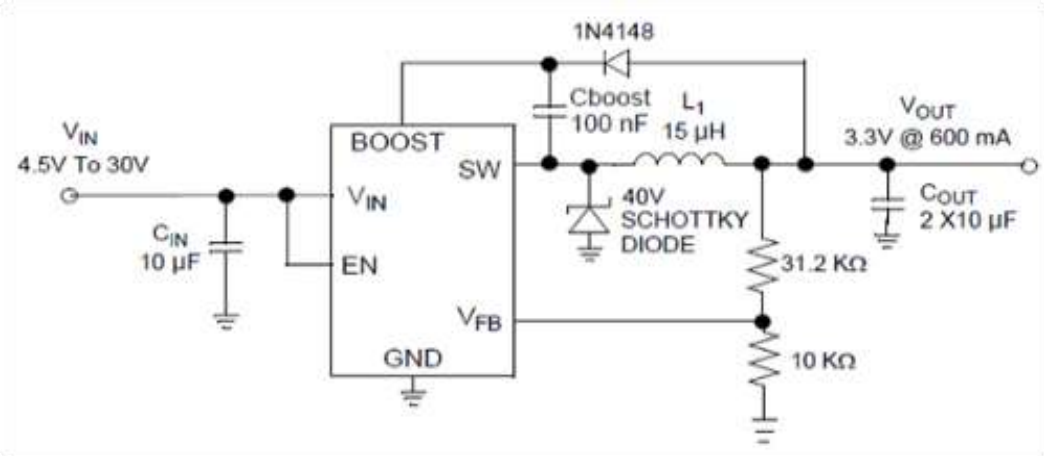

<< BACK

P/N: ADM00352

MCP16301 HV Buck Converter Demo Board

Online Info

Demo board supporting the development of MCP16301 high input voltage, 300mA, D2PAK buck converter.

Products supported

- MCP16301

This Kit Contains:

• MCP16301 300mA D2PAK Demo Board

MCP16301 300mA D2PAK footprint Demo Board
(Part # ARD00360)

<< BACK

P/N: ADM00360

MCP16301 HV Cuk LED Driver Demo Board

Online Info

The MCP16301 High-Voltage Single-Inductor Cuk LED Driver Demo Board is designed to operate from a 6V to 18V input and regulate the output current to 300 mA. Test points for input power are provided to demonstrate the capability of the demo board over the entire range. The demo board was designed using small surface-mount components to show application size for a high-voltage single-inductor Cuk LED driver design. Compared with the traditional asynchronous buck converter, the MCP16301 High-Voltage Single-Inductor Cuk LED Driver Demo Board has an additional resistor and capacitor for compensation.

Features:

- 6V to 18V Input Voltage
- Input voltage can be lower or higher than the output voltage
- 300 mA output current
- Four 3W LEDs
- Dimming can be achieved by pulsing the enable pin on the MCP16301

Products supported

- MCP16301

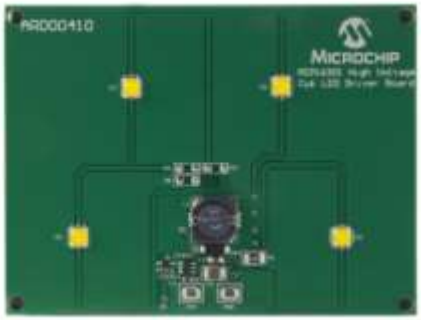

<< BACK

P/N: ARD00410

MCP16301 5V/600mA Low Noise Evaluation Board

Online Info

The MCP16301 5V/600mA Low Noise Evaluation Board is used to demonstrate a high voltage input DC-DC converter design, which can deliver high efficiency, while minimizing high-frequency switching noise. The board steps down high input voltages, up to 30V, to a low output voltage, having more than 90% efficiency and a minimum of 30 mV output ripple. High-frequency input/output noise generated by the switching converters can reach high-noise levels that interfere with other devices powered from the same source. The high amplitude of high-frequency noise can disturb some RF systems. High efficiency is achieved with the MCP16301 buck converter by switching the integrated N-Channel MOSFET at a high speed. The evaluation board is optimized for 12V Input and 100 mA load.

Features:

- Input voltage: 6 to 30V
- Output voltage: 5V
- Output capability: 600 mA load current
- Output ripple plus noise: 30 mV_{p-p} @ 12V input and 100 mA load
- Low radiated noise
- Efficiency: up to 91% @ 12V input

Products supported

- MCP16301

<< BACK

P/N: ADM00433

MCP16301 High Voltage Buck-Boost Demo Board

Online Info

The MCP16301 High Voltage Buck-Boost Demo Board is designed to operate from a 5V to 30V input and regulate the output to 12V. Test points for input power and load are provided to demonstrate the capability of the demo board over the entire range. The MCP16301 High Voltage Buck-Boost Demo Board was designed using small surface-mount components to show application size for a high voltage buck-boost design

Features:

- Input Voltage Range: 4.0V to 30V
- Output Voltage Range: 2.0V to 15V
- Up to 96% Typical Efficiency
- 2% Output Voltage Accuracy
- Integrated N-Channel Switch: 460 mΩ
- 500 kHz Fixed Frequency

Products supported

- MCP16301

<< BACK

P/N: ADM00399

MCP16311/2 Synchronous Buck Converter Eval Board

Online Info

The MCP16311/2 Synchronous Buck Converter Evaluation Board is used to evaluate and demonstrate Microchip Technology's MCP16311/2 product. This board demonstrates the MCP16311 (PFM/PWM – low quiescent current) and the MCP16312 (PWM only – low output voltage ripple) in two buck converter applications with two output voltages. It can be used to evaluate both package options: 8LD MSOP and 8LD 2 x 3 TDFN. The MCP16311/2 Synchronous Buck Converter Evaluation Board was developed to help engineers reduce the product design cycle time. Two common output voltages can be selected: 3.3V and 5.0V. The first converter with the 8LD MSOP package is a PWM/PFM device with a fixed output of 3.3V, while the second converter with the 2 x 3 8LD TDFN package is a PWM-only device, with a fixed output of 5V.

Features:

- Input Voltage Range (VIN): 4V to 30V
- Fixed Output Voltage: 3.3V and 5.0V
- Output Current: Typically 1A @ 3.3V Output, 12V Input
- Automatic PFM/PWM Operation for MCP16311, or PWM-only for MCP16312
- PWM Switching Frequency: 500 kHz
- Internal Compensation
- Internal Soft Start
- Overtemperature Protection

Products supported

- MCP16311
- MCP16312

<< BACK

P/N: ADM00467

MCP16331 Buck Converter Evaluation Board

Online Info

The MCP16331 Buck Converter Evaluation Board is used to evaluate and demonstrate Microchip Technology's MCP16331 product in the SOT-23 package. This board demonstrates the MCP16331 in a buck-converter application with two selectable output voltages. Test points are provided for the input and output, allowing the board to be connected directly to a system. Additional test points are provided to access the EN pin, in order to modify the state of the converter and also access the SW pin, in order to see the switching waveform. The MCP16331 High-Voltage Buck Converter Evaluation Board was developed to help engineers reduce product design cycle time.

Features:

- Input voltage range, VIN: 6V to 50V
- Converter can be turned on/off by using a jumper
- Fixed output voltage: 3.3V or 5.0V (selectable)
- Typical output current: 500 mA
- PWM Switching Frequency = 500 kHz
- Internal compensation
- Internal soft-start
- Over-temperature protection

Products supported

- MCP16331

<< BACK

P/N: ADM00519

MIC2172 Evaluation Board

Online Info

This evaluation board uses the MIC2172 switching regulator IC to generate positive and/or negative voltages suitable for powering LCDs (liquid crystal displays). The MIC2172 regulator IC features a switching frequency of 100kHZ and combines a switching transistor, control circuitry and reference in a single package.

This evaluation board demonstrates the following:

- Positive and/or negative voltage output greater than the input voltage (boost function).
- Thermositor-controlled [temperature] adjusted output voltage. (For LCDs that requires a power source with a negative temperature coefficient.)
- Soft-start circuity.
- P-channel MOSFET switch-controlled positive output which provides a true, zero-voltage shutdown.

Products supported

- MIC2172

P/N: MIC2172YM-SEPIC-EV

<< BACK

MIC4684 Evaluation Board

Online Info

The MIC4684 is a high-efficiency 200kHz stepdown (buck) switching regulator. Power conversion efficiency of above 85% is easily obtainable for a wide variety of applications.

Products supported

- MIC4684

P/N: MIC4684YM-EV

<< BACK

MIC2207 Evaluation Board

Online Info

The MIC2207 is a high efficiency PWM buck (step-down) regulator that provides up to 3A of output current. The MIC2207 operates at 2MHz and has proprietary internal compensation that allows a closed loop bandwidth of over 200 KHz.

The MIC2207 evaluation board requires an input power source that is able to deliver greater than 2.7V at over 3A. The output load can either be an active or passive source.

Products supported

- MIC2207

P/N: MIC2207YML-EV

<< BACK

MIC22205 Evaluation Board

Online Info

The MIC22205 is a high-efficiency, 2A, integrated switch, synchronous buck (step-down) regulator. The MIC22205 is optimized for highest efficiency, achieving more than 95% efficiency while still switching at 1MHz. The ultra-high speed control loop keeps the output voltage within regulation even under the extreme transient load swings commonly found in FPGAs and low-voltage ASICs. The output voltage is pre-bias safe and can be adjusted down to 0.7V to address all low-voltage power needs.

The MIC22205YML-EV requires a power supply of 2.9V to 5.5V, and a test load. Make sure that the power supply can provide the wattage needed for the chosen test load. The load can be active (electronic load) or passive (resistor). Additionally, monitor the Power Good output (PG) with a multimeter or an oscilloscope.

Products supported

- MIC22205

<< BACK

P/N: MIC22205YML EV

MIC22405 Evaluation Board

Online Info

The MIC22405 is a high efficiency, 4A integrated switch synchronous buck (step-down) regulator. The MIC22405 is optimized for highest efficiency, achieving more than 95% efficiency while still switching at 1MHz. The ultra-high speed control loop keeps the output voltage within regulation even under the extreme transient load swings commonly found in FPGAs and low-voltage ASICs. The output voltage is pre-bias safe and can be adjusted down to 0.7V to address all low-voltage power needs.

The MIC22405YML-EV requires a power supply of 2.9V to 5.5V, and a test load. Ensure that the power supply can provide the wattage required for the chosen test load. The load can be active (electronic load) or passive (resistor). Additionally, monitor the Power Good Output (PG) with a multimeter or an oscilloscope if desired.

Products supported

- MIC22405

<< BACK

P/N: MIC22405YML-EV

MIC22705 Evaluation Board

Online Info

The MIC22705 is a high-efficiency, 7A integrated switch synchronous buck (step-down) regulator. The MIC22705 is optimized for highest efficiency, achieving more than 95% efficiency while still switching at 1MHz. The ultra-high speed control loop keeps the output voltage within regulation even under the extreme transient load swings commonly found in FPGAs and low-voltage ASICs. The output voltage is pre-bias safe and can be adjusted down to 0.7V to address all low-voltage power needs.

The MIC22705YML-EV requires a power supply of 2.9V to 5.5V, and a test load. Ensure that the power supply can provide the wattage required for the chosen test load. The load can be active (electronic load) or passive (resistor). Additionally, monitor the Power Good output (PG) with a multimeter or an oscilloscope if desired.

Products supported

- MIC22705

<< BACK

P/N: MIC22705YML-EV

MIC4720 Evaluation Board

Online Info

The MIC4720 is a high efficiency PWM buck (step-down) regulator that provides up to 2A of output current. The MIC4720 operates at 2.0MHz and has proprietary internal compensation that allows a closed loop bandwidth of over 200kHz.

The low on-resistance internal p-channel MOSFET of the MIC4720 allows efficiencies over 92%, reduces external components count and eliminates the need for an expensive current sense resistor.
The MIC4720 operates from 2.7V to 5.5V input and the output can be adjusted down to 1V. The devices can operate with a maximum duty cycle of 100% for use in low-dropout conditions.

Products supported

- MIC4720

P/N: MIC4720YML-EV
MIC4720YMME-EV

<< BACK

MIC4723 Evaluation Board

Online Info

The MIC4723 is a high efficiency PWM buck (step-down) regulator that provides up to 3A of output current. The MIC4723 operates at 2.0MHz and has proprietary internal compensation that allows a closed loop bandwidth of over 200kHz.

The low on-resistance internal p-channel MOSFET of the MIC4723 allows efficiencies over 92%, reduces external components count and eliminates the need for an expensive current sense resistor.

The MIC4723 operates from 2.7V to 5.5V input and the output can be adjusted down to 1V. The devices can operate with a maximum duty cycle of 100% for use in low-dropout conditions.

Products supported

- MIC4723

P/N: MIC4723YML-EV
MIC4723YMME-EV

<< BACK

MIC4724 Evaluation Board

Online Info

The MIC4724 is a high efficiency PWM buck (step-down) regulator that provides up to 3A of output current. The MIC4724 operates at 2.0MHz and has proprietary internal compensation that allows a closed loop bandwidth of over 200kHz.

The low on-resistance internal p-channel MOSFET of the MIC4724 allows efficiencies over 92%, reduces external components count and eliminates the need for an expensive current sense resistor.

The MIC4724 operates from 3.0V to 6.0V input and the output can be adjusted down to 1V. The devices can operate with a maximum duty cycle of 100% for use in low-dropout conditions.

Products supported

- MIC4724

P/N: MIC4724YMME-EV

<< BACK

MIC4930 Evaluation Board

Online Info

The MIC4930 is a high-efficiency, 3A synchronous buck regulator with ultra-fast transient response perfectly suited for supplying processor core and I/O voltages from a 5V or 3.3V bus. The MIC4930 provides a switching frequency up to 3.3MHz while achieving peak efficiencies up to 95%. An additional benefit of high-frequency operation is very low output ripple voltage throughout the entire load range with the use of a small output capacitor. The MIC4930 is designed for use with a very small inductor, down to 1µH, and an output ceramic capacitor as small as 10µF without the need for external ripple injection. A wide range of output capacitor types and values can also be accommodated.

Products supported

- MIC4930

P/N: MIC4930YFL-EV

<< BACK

MIC23050 Evaluation Board

Online Info

The MIC23050 is a 500mA 4MHz switching regulator. The MIC23050 is highly efficient throughout the load range and only draws 20µA of quiescent current.

The MIC23050 evaluation board requires an input power source that is able to deliver greater than 650mA at 2.7V. The output load can either be an active or passive load.

Products supported

- MIC23050

P/N: MIC23050-4YML-EV
MIC23050-CYML-EV
MIC23050-GYML-EV
MIC23050-SYML-EV

<< BACK

MIC23031 Evaluation Board

Online Info

The MIC23031 is a 400mA 4MHz switching regulator. The MIC23031 is highly efficient throughout the entire output current range, drawing just 21µA of quiescent current in operation. The MIC23031 provides accurate output voltage regulation under the most demanding conditions and responds extremely quickly to a load transient with exceptionally small output voltage ripple.

The MIC23031 evaluation board requires an input power source that is able to deliver greater than 500mA at 2.7V to the MIC23031. The output load can either be an active (electronic) or passive (resistive) load.

Products supported

- MIC23031

P/N: MIC23031-AYMT-EV

<< BACK

MIC23030 Evaluation Board

Online Info

The MIC23030 is a 400mA 8MHz switching regulator. The MIC23030 is highly efficient throughout the entire output current range, drawing just 21µA of quiescent current in operation. The MIC23030 provides accurate output voltage regulation under the most demanding conditions and responds extremely quickly to a load transient with exceptionally small output voltage ripple. Factoring in the output current, the internal circuitry of the MIC23030 automatically selects between two modes of operation for optimum efficiency.

The MIC23030 evaluation board requires an input power source that is able to deliver greater than 500mA at 2.7V to the MIC23030. The output load can either be an active (electronic) or passive (resistive) load.

Products supported

- MIC23030

P/N: MIC23030-AYMT-EV

<< BACK

MIC23153 Evaluation Board

Online Info

This board enables the evaluation of the MIC23153, a fully integrated 2A, 4MHz switching regulator featuring HyperLight Load mode, Power Good output indicator, and programmable soft-start.

Products supported

- MIC23153

P/N: MIC23153-GYMT-EV
MIC23153YMT-EV

<< BACK

MIC23158 Evaluation Board

Online Info

The MIC23158 is a high efficiency 3MHz dual 2A synchronous buck regulator with HyperLight Load® mode, Power Good output indicator, and programmable soft start. The MIC23159 also provides an auto discharge feature that switches in a 225Ω pull down circuit on its output to discharge the output capacitor when disabled. HyperLight Load®provides very high efficiency at light loads and ultra fast transient response which makes the MIC23158 perfectly suited for supplying processor core voltages.

This board requires a single 15W bench power source adjustable from 2.7V to 5.5V. The loads can either be active (electronic load) or passive (resistor) with the capability to dissipate 7W. It is ideal to have an oscilloscope available to view the circuit waveforms, but not essential. For the simplest tests, three voltage meters are required to measure input and two output voltages. For efficiency measurements, three voltage meters and three ammeters are required to prevent errors due to measurement inaccuracies.

Products supported

- MIC23158

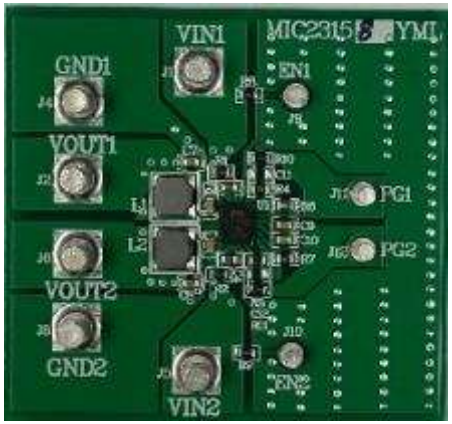

P/N: MIC23158YML-EV

<< BACK

MIC23250 Evaluation Board

Online Info

The MIC23250 is a high efficiency 4MHz dual 400mA synchronous buck regulator with HyperLight Load® mode. HyperLight Load® provides very high efficiency at light loads and ultra-fast transient response which is perfectly suited for supplying processor core voltages. An additional benefit of this proprietary architecture is very low output ripple voltage throughout the entire load range with the use of small output capacitors.

The MIC23250 evaluation board requires an input power source that is able to deliver greater than 800mA at 2.7V. The output loads can either be an active (electronic) or passive (resistive) load.

Products supported

- MIC23250

P/N: MIC23250-AAYMT-EV
MIC23250-C4YMT-EV
MIC23250-G4YMT-EV
MIC23250-S4YMT-EV

<< BACK

MIC23303 Evaluation Board

Online Info

The MIC23303 is a high efficiency 4MHz 3A synchronous buck regulator with HyperLight Load® mode, Power Good output indicator, and programmable soft-start. HyperLight Load® provides very high efficiency at light loads and ultra-fast transient response which makes the MIC23303 perfectly suited for supplying processor core voltages. An additional benefit of this proprietary architecture is very low output ripple voltage throughout the entire load range with the use of small output capacitors.

Products supported

- MIC23303

P/N: MIC23303YML-EV

<< BACK

MIC23603 Evaluation Board

Online Info

The MIC23603 is a high-efficiency 4MHz 6A synchronous buck regulator with HyperLight Load® mode. HyperLight Load® provides very high efficiency at light loads and ultrafast transient response which is perfectly suited for supplying processor core voltages. An additional benefit of this proprietary architecture is very low output ripple voltage throughout the entire load range with the use of small output capacitors. The tiny 4mm x 5mm DFN package saves precious board space and requires few external components

Products supported

- MIC23603

P/N: MIC23603YML-EV

<< BACK

MIC2125/6 Evaluation Board

Online Info

The MIC2125 and MIC2126 are constant-frequency synchronous buck controllers featuring a unique adaptive ON-time control architecture. The MIC2125/6 operate over an input voltage range from 4.5V to 28V and can be used to supply load current up to 25A. The output voltage is adjustable down to 0.6V with an accuracy of ±1%. The device operates with programmable switching frequency from 200 kHz to 750 kHz. HyperLight Load® architecture operates in pulse-skipping mode at light loads, but operates in fixed-frequency CCM mode from medium loads to heavy loads. Hyper Speed Control® architecture operates in fixed-frequency CCM mode under all load conditions.

Products supported

- MIC2125
- MIC2126

P/N: MIC2125YML-20A-EV
MIC2126YML-20A-EV

<< BACK

MIC24051 Evaluation Board

Online Info

The MIC24051 is a constant-frequency, synchronous buck regulator featuring a unique adaptive on-time control architecture. The MIC24051 operates over an input supply range of 4.5V to 19V and provides a regulated output of up to 6A of output current. The output voltage is adjustable down to 0.8V with a guaranteed accuracy of ±1%, and the device operates at a switching frequency of 600kHz.

Products supported

- MIC24051

P/N: MIC24051YJL-EV

<< BACK

MIC24052 Evaluation Board

Online Info

The MIC24052 is a constant-frequency, synchronous DC/DC buck regulator featuring adaptive on-time control architecture. The MIC24052 operates over a supply range of 4.5V to 19V. It has an internal linear regulator which provides a regulated 5V to power the internal control circuitry. The MIC24052 operates at a constant 600kHz switching frequency in continuous-conduction mode and can be used to provide up to 6A of output current. The output voltage is adjustable down to 0.8V.

Products supported

- MIC24052

P/N: MIC24052YJL-EV

<< BACK

MIC24053 Evaluation Board

Online Info

The MIC24053 is a constant-frequency, synchronous buck regulator featuring a unique adaptive on-time control architecture. The MIC24053 operates over an input supply range of 4.5V to 19V and provides a regulated output of up to 9A of output current. The output voltage is adjustable down to 0.8V with a guaranteed accuracy of ±1%, and the device operates at a switching frequency of 600kHz.

Products supported

- MIC24053

P/N: MIC24053YJL-EV

<< BACK

MIC24054 Evaluation Board

Online Info

The MIC24054 is a constant-frequency, synchronous DC/DC buck regulator featuring adaptive on-time control architecture. The MIC24054 operates over a supply range of 4.5V to 19V. It has an internal linear regulator which provides a regulated 5V to power the internal control circuitry. The MIC24054 operates at a constant 600kHz switching frequency in continuous conduction mode and can be used to provide up to 9A of output current. The output voltage is adjustable down to 0.8V.

Products supported

- MIC24054

P/N: MIC24054YJL-EV

<< BACK

MIC24055 Evaluation Board

Online Info

The MIC24055 is a constant-frequency, synchronous buck regulator featuring a unique adaptive on-time control architecture. The MIC24055 operates over an input supply range of 4.5V to 19V and provides a regulated output of up to 12A of output current. The output voltage is adjustable down to 0.8V with a guaranteed accuracy of ±1%, and the device operates at a switching frequency of 600kHz.

Products supported

- MIC24055

P/N: MIC24055YJL-EV

<< BACK

MIC24056 Evaluation Board

Online Info

The MIC24056 is a constant-frequency, synchronous DC/DC buck regulator featuring adaptive on-time control architecture. The MIC24056 operates over a supply range of 4.5V to 19V. It has an internal linear regulator which provides a regulated 5V to power the internal control circuitry. MIC24056 operates at a constant 600kHz switching frequency in continuous-conduction mode and can be used to provide up to 12A of output current. The output voltage is adjustable down to 0.8V..

Products supported

- MIC24056

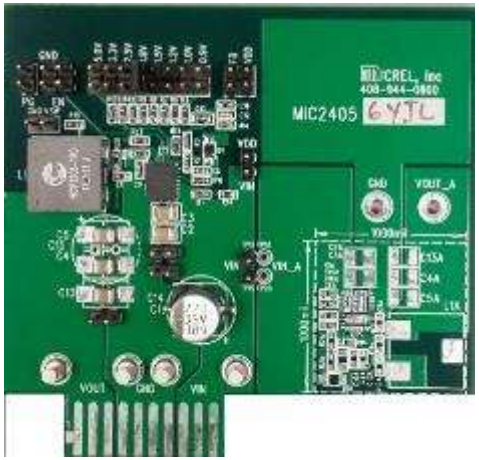

P/N: MIC24056YJL-EV

<< BACK

MIC28511 Evaluation Board

Online Info

The MIC28511 is a synchronous step-down switching regulator with internal power switches capable of providing up to 3A output current from a wide input supply range from 4.6V to 60V. The output voltage is adjustable down to 0.8V with a guaranteed accuracy of ±1%. A constant switching frequency can be programmed from 200kHz to 680kHz. The Hyper Speed Control™ and HyperLight Load® architectures of the MIC28511 allow for high V_{IN} (low V_{OUT}) operation and ultra-fast transient response while reducing the required output capacitance and providing very good light load efficiency.

Products supported

- MIC28511-1
- MIC28511-2

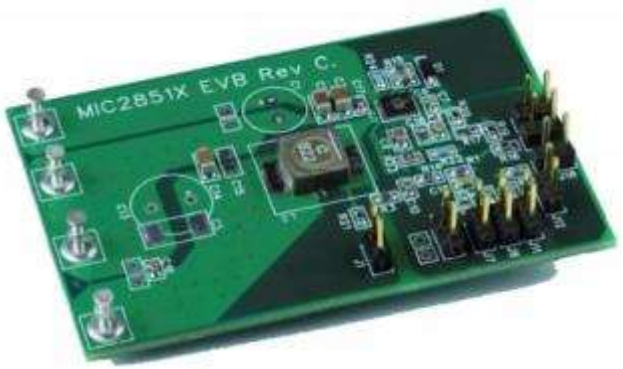

P/N: MIC28511-1YFL-EV
MIC28511-2YFL-EV

<< BACK

MIC28512 Evaluation Board

Online Info

The MIC28512 eval board is used to demonstrate the features of the MIC28512, a synchronous step-down regulator featuring unique adaptive on-time control architecture with integrated power MOSFETs. The MIC28512 operates over an input supply range of 4.6V to 70V, and can be used to supply up to 2A of output current. The output voltage is adjustable down to 0.8V with a guaranteed accuracy of ±1% from 0°C to 85°C. The device operates with a programmable switching frequency from 200kHz to 680kHz (nominal). The MIC28512 evaluation board requires only a single power supply with at least 5A current capability. For applications where VIN is less than +5.5V, the internal LDO can be bypassed by tying VDD to VIN.

Products supported

- MIC28512-1
- MIC28512-2

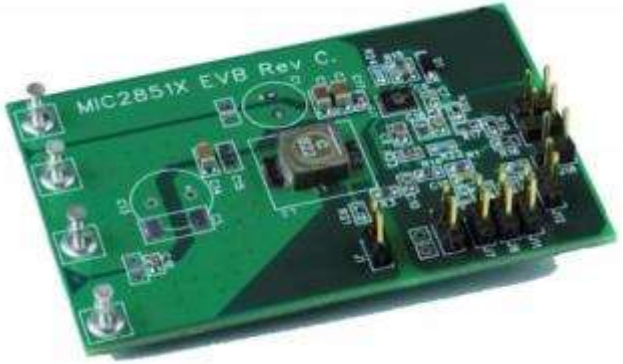

P/N: MIC28512-1YFL-EV
MIC28512-2YFL-EV

<< BACK

TC1303B Demo Board

Online Info

The TC1303B Dual-Output Regulator with Power-Good Output Demo Board can be used to evaluate the TC1303B device over the input voltage range and output current range for both the synchronous buck regulator output and the low-dropout linear regulator output.

Test points are provided for input power, output loads, shutdown control and power-good monitoring.

Products supported

- TC1303B

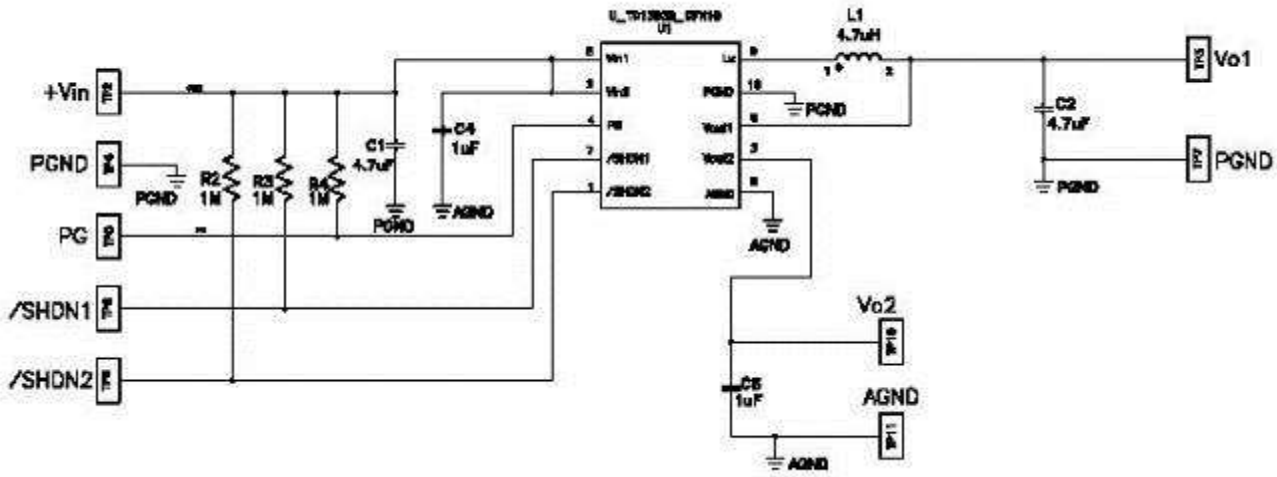

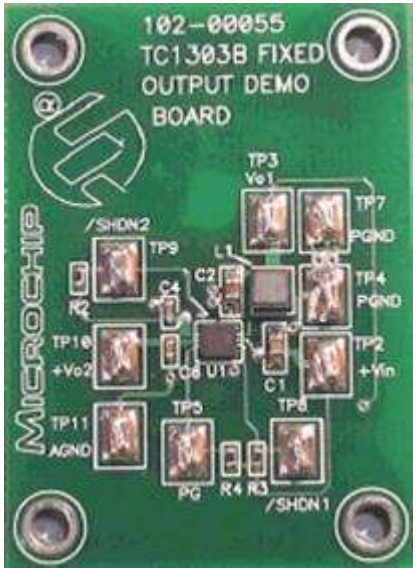

<< BACK

P/N: TC1303BDM-DDBK1

TC1303C Demo Board

Online Info

The TC1303C DFN Adjustable Output demo board demonstrates the use of Microchip's TC1303C device in applications that require dual supply voltage. The demo board is used to evaluate the TC1303C device over the input voltage range, output voltage and current range for both the synchronous buck regulator output and the low dropout linear regulator output.

Products supported

- TC1303C

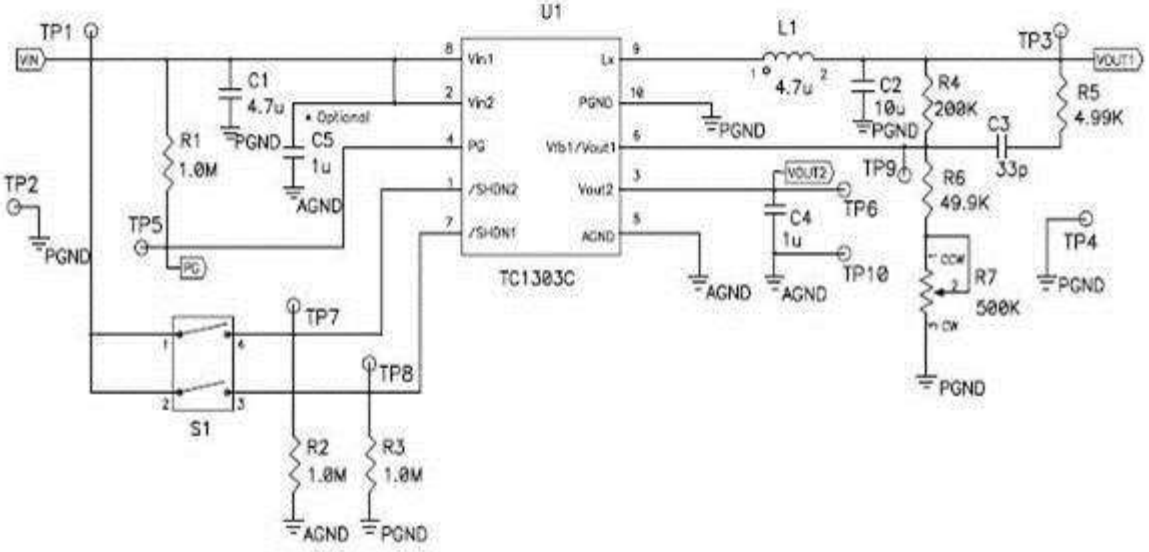

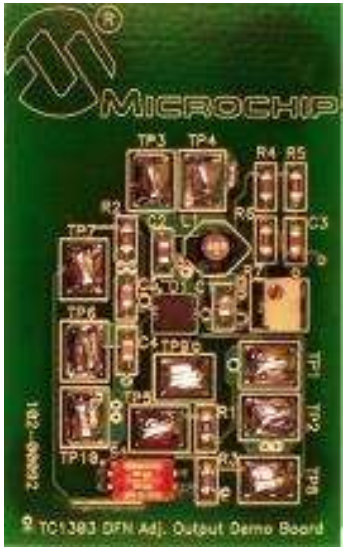

<< BACK

P/N: TC1303DM-DDBK2

MCP1632 300 kHz Boost Converter Demo Board

Online Info

The MCP1632 300 kHz Boost Converter Demo Board is a compact, highly efficient, step-up voltage converter that will convert the input voltage rail (typically 5V) to a regulated 12V output voltage. The maximum output current for this demo board is 0.9A. The board demonstrates the capabilities of the MCP1632 PWM controller. Test points for various signals are provided for measuring different parameters of the converter. The Demo Board can be modified to support output voltages from 9V to 15V by changing a single resistor.

Products supported

- MCP1632

Features:

- Input Voltage Range: 3.6V to 5.5V
- Output Voltage: 12V (9V to 15V adjustable)
- Maximum Output Current: 0.9A
- 90% typical efficiency at 12V/0.8A output and 5V input
- 300 kHz fixed switching frequency
- Overcurrent Protection for MOSFETs
- Shutdown input for low-power Standby mode
- UVLO with 2.7V and 2.8V typical thresholds

P/N: ADM00530

<< BACK

MCP19035 300 kHz Buck Controller Eval Board

Online Info

The MCP19035 300 kHz Synchronous Buck Controller Evaluation Board is a compact, highly efficient, step-down voltage regulator that will convert the input voltage rail (typically 12V) to 1.8V regulated output voltage. The maximum output current for this step-down converter is 15A. The board demonstrates the capabilities of the MCP19035 300 kHz synchronous buck converter, as well as Microchip's high-performance power MOSFET transistors. Test points for various signals are provided for measuring different parameters of the converter. The evaluation board can be modified to support output voltages from 0.9V to 3.3V by changing a single resistor.
Microchip's companion Power MOSFETs are used in the design.

Products supported

- MCP19035
- MCP87050
- MCP87022

P/N: ADM00434

<< BACK

MCP19035 600 kHz Buck Controller Eval Board

Online Info

The MCP19035 600 kHz Synchronous Buck Controller Evaluation Board is a compact, highly efficient, step-down voltage regulator that will convert the input voltage rail (typically 12V) to 1.8V regulated output voltage. The maximum output current for this step-down converter is 10A. The board demonstrates the capabilities of the MCP19035 600 KHz Synchronous Buck Converter, as well as Microchip's high-performance power MOSFET transistors. Test points for various signals are provided for measuring different parameters of the converter. The evaluation board can be modified to support output voltages ranging from 0.9V to 3.3V by changing a single resistor.

Features:

- Input Voltage Range: 8V to 14V
- Output Voltage: 1.8V (can be adjusted by changing one resistor between 0.9V and 3.3V)
- Maximum Output Current: 10A
- 88% typical efficiency at 1.8V/10A output and 12V input
- 600 kHz fixed switching frequency
- On-board High Performance Power MOSFET Transistors
- Overcurrent Protection for High and Low-Side MOSFETs
- Power Good (PGOOD) output for monitoring the output voltage quality
- Shutdown input for placing the converter in low-power standby mode
- Under Voltage Lockout (UVLO) with 4.2V and 3.6V typical thresholds

Products supported

- MCP19035
- MCP87050
- MCP87022

P/N: ADM00445

<< BACK

MCP19111 Eval Board

Online Info

The MCP19111 Evaluation Board demonstrates how the MCP19111 device operates in a synchronous buck topology over a wide input voltage and load range. Nearly all operational and control system parameters are programmable by utilizing the integrated PIC microcontroller core. MPLAB X IDE can be used in conjunction with a Graphical User Interface (GUI) plug-in to easily configure the MCP19111. Alternatively, the user can program the MCP19111 using their own firmware, tailoring it to their application. The evaluation board contains headers for ICSP™ (In-Circuit Serial Programming™) as well as I^2C communication, pull-up and pull-down resistor pads and test point pads on each GPIO pin, and two push buttons for system development.

Products supported

- MCP19111
- MCP87050
- MCP87018

P/N: ADM00397

<< BACK

MCP19114 Flyback Standalone Evaluation Board

Online Info

The MCP19114 Flyback Standalone Evaluation Board and Graphical User Interface (GUI) demonstrate the MCP19114 performance in a synchronous Flyback topology. It is configured to regulate load current, and is well suited to drive LED loads. Nearly all operational and control system parameters are programmable through the integrated PIC MCU core. The MCP19114 evaluation board comes preprogrammed with firmware designed to operate with the GUI interface. Microchip's MPLABX IDE (Integrated Development Environment) can be used to develop and program user-defined firmware, thus customizing it to the specific application. The evaluation board contains headers for ICSPTM (In-Circuit Serial Programming) as well as I2C™ communication. Several test points have been designed into the PWB for easy access and development purposes. The MCP19114-Flyback Standalone Evaluation Board also demonstrates an optimized PCB (Printed Circuit Board) layout that minimizes parasitic inductance, while increasing efficiency and power density. Proper PCB layout is critical to achieve optimum MCP19114 operation as well as power train efficiency and noise minimization.

Features

- Ceramic and bulk capacitors on the input reduce RMS ripple current and tame input voltage deviation caused by load transients
- Ceramic capacitors on the output reduce voltage ripple and provide energy to the output while the primary side is being re-energized
- PC software provides simple interface to evaluating the evaluation board
- Vin range: 8V to 14V
- Adjustable Vout range: 0V to 50V
- Maximum output current: 500mA with proper air flow
- Programming and I2C communication headers

Products supported

- MCP19114

P/N: ADM00578

<< BACK

MCP19215 Boost / SEPIC Eval Board

Online Datasheet

The MCP19215 Dual Channel Controller Evaluation -
- Board demonstrates how the MCP19215 device –
- operates in Boost and SEPIC topologies over a wide –
- input voltage and load range. Nearly all operational –
- and control system parameters are programmable –
- by utilizing the integrated PIC controller.

Products supported:

- MCP19215

Features:

- Input voltage range: 8V to 15V
- Output voltage: default 20V for both channels (can be –
  - software adjusted from input voltage + 1V to 24V for –
  - channel 1 and 9V to 24V for channel 2)
- Default output current: 0.2A (can be software adjusted –
  - from 0A to 1A)
- 300 kHz switching frequency
- Status report (including errors, input voltage, output –
  - voltage and current) via I2C communication
- Under voltage lockout (UVLO) and overvoltage lockout –
  - (OVLO) with programmable thresholds (via software)

P/N: ADM00799

<< BACK

MIC2101/2 Evaluation Board

Online Info

The MIC2101/02 are constant-frequency, synchronous buck controllers featuring a unique adaptive ON-time control architecture. The MIC2101/02 operates over an input supply range from 4.5V to 38V and can be used to supply up to 15A of output current. The output voltage is adjustable down to 0.8V with a guaranteed accuracy of ±1%. The device operates with programmable switching frequency from 200kHz to 600kHz.

The MIC2101 and MIC2102 evaluation board requires only a single power supply with at least 10A current capability. The MIC2101/02 has internal VDD LDO so no external linear regulator is required to power the internal biasing of the IC. In the applications with VIN < +5.5V, VDD should be tied to VIN to by-pass the internal linear regulator. The output load can either be a passive or an active load.

Products supported

- MIC2101
- MIC2102

P/N: MIC2101YML-12A-EV
MIC2102YML-12A-EV

<< BACK

MIC2169 Evaluation Board

Online Info

The MIC2169A is a high-efficiency, simple to use 500kHz PWM synchronous buck control IC housed in a small MSOP-10 package. The MIC2160A allows compact DC-to-DC solutions with a minimal external component count and cost. The output voltage can be precisely regulated down to 0.8V. The adaptive all N-Channel MOSFET drive scheme allows efficiencies over 95% across a wide load range.

Products supported

- MIC2169

P/N: MIC2169A-TINY3A-EV

<< BACK

MIC2196 LED Driver Evaluation Board

Online Info

The MIC2196 current mode boost controller is used to implement a LED Driver with PWM DIM control. The LED series string is pulsed on and off by the PWM DIM input signal to provide true PWM dimming. When pulsed on the LED, current is regulated by the high frequency current mode boost converter.

Products supported

- MIC2196

P/N: MIC2196YM-LED-EV

<< BACK

MIC2104 Evaluation Board

Online Info

The MIC2104 ia a constant-frequency, synchronous buck controller featuring a unique adaptive ON-time control architecture. The MIC2104 operates over an input supply range from 4.5V to 75V and can be used to supply up to 15A of output current. The output voltage is adjustable down to 0.8V with a guaranteed accuracy of ±1%. The device operates with programmable switching frequency from 200kHz to 600kHz.

The MIC2104 evaluation board requires only a single power supply with at least 10A current capability. The MIC2104 has internal VDD LDO so no external linear regulator is required to power the internal biasing of the IC. In the applications with VIN < +5.5V, VDD should be tied to VIN to by-pass the internal linear regulator. The output load can either be a passive or an active load.

Products supported

- MIC2104

P/N: MIC2104YML-10A-EV

<< BACK

Online Info

MIC2103 Evaluation Board

The MIC2103/04 are constant-frequency synchronous buck controllers featuring a unique adaptive on-time control architecture. The MIC2103/04 operates over an input supply range of 4.5V to 75V and can be used to supply up to 15A of output current. The output voltage is adjustable down to 0.8V with a guaranteed accuracy of ±1%. The device operates with programmable switching frequency from 200kHz to 600kHz.

Products supported

- MIC2103

P/N: MIC2103YML-10A-EV

<< BACK

MIC2130/1 Evaluation Board

Online Info

The MIC2130/1 evaluation board is a high voltage input PWM synchronous buck converter. The MIC2130/1 is a voltage mode controller with a fast hysteretic control loop (FHyCL) employed during fast line and load transients. The MIC2130/1 has an internal transconductance error amplifier, gate drivers, current limit, enable and under voltage lock out and soft start circuitry. The internal gate drivers are designed to drive high current MOFETs. The evaluation board output voltage is selected by a jumper for pre-selected voltage divider network, 1.8V, 3.3V, 5V or leaving the jumper open for 0.7V. The maximum current limit is set a 9A. The input voltage is 8V to 40V.

Products supported

- MIC2130
- MIC2131

P/N: MIC2130-EV
MIC2131-EV

<< BACK

MIC2176 5A Evaluation Board

Online Info

The MIC2176-1/-2/-3 is a family of constant frequency, synchronous buck controllers featuring a unique digitally modified adaptive ON-time control architecture. The MIC2176 family operates over an input supply range of 4.5V to 75V. The output voltage is adjustable down to 0.8V with a guaranteed accuracy of +/-1% typically, and the device operates at a switching frequency of 100kHz, 200kHz, and 300kHz.

The MIC2176 evaluation board requires only a single power supply with at least 10A current capability. A linear regulator, which includes a Zener and an NPN transistor, has been installed on the board to provide housekeeping for the MIC2176 controller. The output load can either be a passive or an active load.

Products supported

- MIC2176-2

P/N: MIC2176-2YMM-5A-EV

<< BACK

MCP1640 Eval Board

Online Info

The MCP1640 Synchronous Boost Converter Evaluation Board uses the MCP1640 in a high-efficiency (up to 96%), fixed frequency (500MHz), step-up DC-DC converter.
It demonstrates:
- Easy-to-use and minimum number of external components power supply solution for applications powered by one-cell, two-cell, or three-cell alkaline, NiCd/NiMH; one-cell Li-Ion or Li-Polymer batteries
- Selection of the best operating mode for efficiency (PWM/PFM)
- A wide input voltage range (0.35 to 5.5V) and low start-up voltage (0.65V)
- PCB layouts recommendation for SOT23-6 and 2x3mm-8 DFN packages
- Three common output voltages to evaluate: 2.0V, 3.3V and 5.0V enable selection (when disabled, the MCP1640 disconnects the path from input to output for “true-disconnect”).

Products supported

- MCP1640

<< BACK

P/N: MCP1640EV-SBC

MCP1640 Single AAAA Battery Boost Ref. Design

Online Info

The MCP1640 Single Quadruple-A Battery Boost Converter Reference Design demonstrates how the MCP1640 device, with the True Output Disconnect Shutdown option, works attached to a microcontroller application. This board demonstrates how to optimize battery life using the MCP1640, and an 8-bit low cost PIC microcontroller, to reduce the No Load Input Current for applications that operate in Standby mode for a long period of time. During Standby, the enable signal for the MCP1640 has a low frequency, with less than 1% positive duty cycle. This maintains the output of the MCP1640 device up to 2.3V, which is sufficient to keep the PIC microcontroller live. This solution reduces up to 80% of the No Load Input Current the MCP1640 consumes in PFM Mode.

Products supported

- MCP1640
- PIC12F617

<< BACK

P/N: MCP1640RD-4ABC

MCP1640 12V/50mA Two Cells Input Ref. Design

Online Info

The MCP1640 12V/50 mA Two Cells Input Boost Converter Reference Design is designed to demonstrate the MCP1640 device's high-voltage boost capability above its typical output range of 5.5V. This board boosts the low-voltage input to 12V and up to 70 mA load. By changing specific resistors, a lower/higher output than 12V can be obtained. The MCP1640 Input Boost Converter was developed to help engineers reduce product design cycle time. At 2.0V input and 12V output, the board is capable of a maximum of 50 mA load current.

This Kit Contains:

- 1x MCP1640 12V/50 mA Two Cells Input Boost Converter Board

Products supported

- MCP1640B

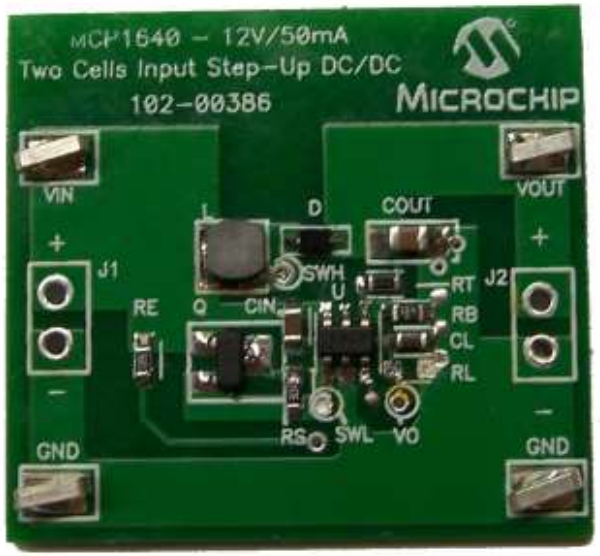

<< BACK

P/N: ARD00386

MCP16251

Single Cell Boost w/Ext. UVLO Ref. Design

Online Datasheet

The MCP16251 Single Cell Boost Converter With External UVLO Reference Design provides an example of how to optimize applications powered from a single AA cell battery by incorporating a ultra low power external under-voltage lockout circuit with hysteresis.

Features:

- Converter will not (re)start if the battery voltage is lower – - than 1.14V and will stop working if the battery voltage – - drops below 0.83V.
- External ULVO circuit drains approximately 0.1-0.4µA – - before start-up and 1 -2uA after start-up.
- Output voltage: 3.3V
- Output current: < 125 mA
- Typical Efficiency: Up to 96%
- Automatic PFM/PWM operation

Products supported:

- MCP16251

P/N: ARD00797

<< BACK

MCP1642B Two-Cells to USB Power Eval Board

Online Info

This board demonstrates the MCP1642B capabilities in a boost-converter application supplied from two AA batteries or from an external voltage source. A USB cable can be connected to the output of MCP1642B Two-Cells to USB Power Evaluation Board and used to provide power to portable electronic devices when necessary. It can be used to evaluate the MSOP-8 package. The MCP1642B Two-Cells to USB Power Evaluation Board was developed to help engineers reduce the product design cycle time. On the MCP1642B Two-Cells to USB Power Evaluation Board, the output voltage has the value of 5.0V (the fixed value MCP1642B-50 device is used), resulting in a simple and compact application. The footprints for RT and RB (resistor divider connected to the FB pin) are not populated and will only be used if MCP1642B-ADJ, the adjustable option, will be tested.

Features:

- Can be powered by two AA batteries or external power supply
- Output voltage: 5.0V
- Power Good indicator 2 mA LED
- Enable state selectable using EN switch with “true-disconnect”
- USB A output connector

Products supported

- MCP1642B

<< BACK

P/N: ADM00556

MCP1643 1.6A LED Driver Evaluation Board

Online Info

The MCP1643 Synchronous Boost LED Constant Current Regulator Evaluation Board is used to evaluate and demonstrate Microchip Technology's MCP1643 device. This board demonstrates the MCP1643 in a boost converter application supplied by one AA battery, or from an external voltage source, which drives an LED with three selectable currents. This evaluation board was developed to help engineers reduce the product design cycle time.
Four output currents can be selected: 25, 50, 75 and 100mA. The output current can be changed with a dual switch that changes the external LED current sense equivalent resistance. An enable switch is used to enable and disable the converter. When enabled, the MCP1643 will regulate the output current; when disabled, the MCP1643 disconnects the path from input to output for "true-disconnect". In this state, the current consumed from the battery is 1 µA, typically.

Features:

- Can be powered by one-cell Alkaline, NiCd, or NiMH batteries, or by external power supply
- Input voltage range, V_{IN}: 0.35V to 2.5V, with $V_{IN} < V_{OUT}$
- Start-up voltage: 0.65V
- Fixed output current: 25 mA 50 mA, 75 mA or 100 mA, selected
- PWM Switching Frequency: 1 MHz
- Mechanical battery reverse polarity protection

P/N: ADM00435

Products supported

- MCP1643

<< BACK

MCP1663 9V/12V/24V Evaluation Board

Online Datasheet

The MCP1663 Evaluation Board is used to evaluate and demonstrate Microchip Technology's MCP1663 step-up switching regulator. This board comes with two distinct applications. The 1st circuit can be used to evaluate the MCP1663 in the typical boost configuration 9V/12V selectable output. The board also provides an example of how a higher input voltage application can be implemented.

Features:

- Typical 9V/12V Output supplied from low input voltage source:
  - Input Voltage range: 2.4V to 5.5V, with VIN – - < VOUT
  - Output Current: typical 250 mA @ 12V Output, - - 3.3V Input
  - Enable state selectable using EN switch
- 24V Output supplied from high input voltage source:
  - Input Voltage range (VIN): 9V to 16V

Products supported:

- MCP1663

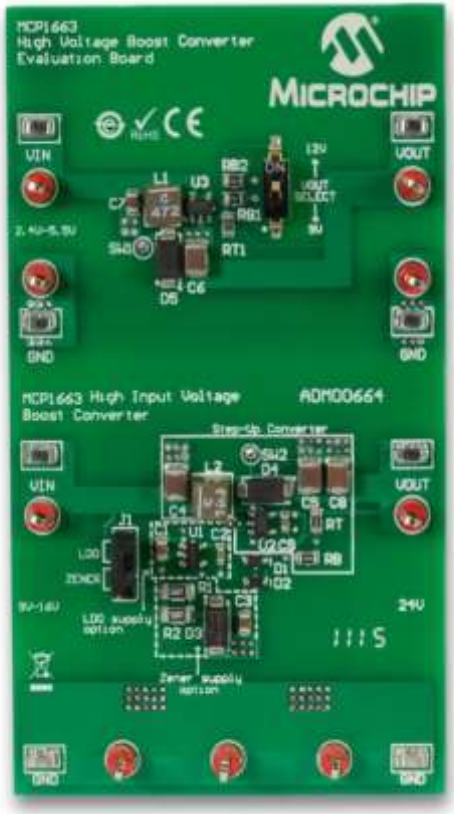

P/N: ADM00664

<< BACK

MCP1664 LED Driver Evaluation Board

Online Datasheet

The MCP1664 LED Driver Evaluation Board is used to evaluate and demonstrate Microchip Technology's MCP1664 product. This board demonstrates the MCP1664 in a boost converter application supplied from an external voltage source, which drives a string of LEDs with three selectable currents. The MCP1664 LED Driver Evaluation Board was developed to help engineers reduce the product design cycle time.

Products supported:

- MCP1664

Features:

- Adjustable Output Current: 90 mA, 180 mA or 270 mA, -- selected using a dual switch on-board
- Input Voltage range (V IN): 2.4V to 5.5V, with VIN < VOUT
- PWM Dimming using PWM generator on board
- 1.8A Peak Input Current Limit

MCP16251 & MCP1640B Synchronous Boost

Online Info

The MCP16251 and MCP1640B Synchronous Boost Converters Evaluation Board is used to evaluate and demonstrate Microchip Technology's MCP16251 and MCP1640B products. This board demonstrates the MCP16251/MCP1640B in two boost-converter applications with multiple output voltages. It can be used to evaluate both package options (SOT-23-6 and 2x3 mm 8-(T)DFN). The MCP16251 and MCP1640B Synchronous Boost Converters Evaluation Board was developed to help engineers reduce the product design cycle time. Three common output voltages can be selected: 2.0V, 3.3V and 5.0V. The output voltage can be changed with a mini-dip switch that changes the external resistor divider. A switch connected to the EN pin is used to enable and disable the converters. When enabled, the MCP16251/MCP1640B will regulate the output voltage; when disabled, the MCP16251/MCP1640B disconnects the path from input to output for "true-disconnect".

Features:

- Can be powered by one-cell, two-cell, or three-cell alkaline, NiCd, NiMH, one-cell Li-Ion or Li-Polymer batteries
- Input voltage range (VIN): 0.35V to 5.5V, with VIN ≤ VOUT
- Fixed output voltage: 2.0V or 3.3V and 3.3V or 5.0V, selected using a mini-dip switch on board
- Output current: typical 125 mA @ 3.3V Output, 1.5V Input or 200 mA @ 5.0V Output, 3V Input

Products supported

- MCP16251
- MCP1640B

<< BACK

P/N: ADM00458

MCP1662 LED Driver Eval Board

Online Info

This board demonstrates the MCP1662 in a boost-converter application supplied by two AA batteries, or from an external voltage source, which drives a string of LEDs with three selectable currents: 30 mA, 60 mA and 90 mA. The output current can be changed with a dual switch that changes the external LED current sense equivalent resistance (RSET). An enable switch is used to enable and disable the converter. When enabled, the MCP1662 will regulate the output current; when disabled, the current consumed from the battery by the device is typically less than 20 nA.

Features:

- Can be powered by two-cell Alkaline, NiCd, NiMH or Lithium AA cell batteries
- Input Voltage range (V IN): 2.4V to 5.5V,
- Undervoltage Lockout: 2.3V to Start; 1.85V to Stop
- Adjustable Output Current: 30 mA, 60 mA or 90 mA, selected using a dual switch on-board
- PWM Switching Frequency: 500 kHz
- Enable converter using switch on board
- 1.3A Peak Input Current Limit
- Overtemperature Protection
- Open Load Protection in case of: LED fail or FB disconnected/fault

Products supported

- MCP1662

<< BACK

P/N: ADM00555

MCP1661 HV Boost and SEPIC Converters Eval Board

Online Info

The MCP1661 High-Voltage Boost and SEPIC Converters Evaluation Board is used to evaluate Microchip Technology's MCP1661 product. This board demonstrates the MCP1661 capabilities in two different topologies:

• 12V output Boost Converter application supplied from an external voltage source (VIN < 5.5V e.g. two cell boost to 12V)

• 3.3V output SEPIC Converter application supplied from a Li-Ion Cell. It can be used to evaluate the SOT-23-5 package. The MCP1661 High-Voltage Boost and SEPIC Converters Evaluation Board was developed to help engineers reduce product design cycle time.

In both the MCP1661 Boost Application and MCP1661 SEPIC Application, the output voltage is set to the proper value using an external resistor divider, resulting in a simple and compact solution.

In the MCP1661 SEPIC Application, a switch is used to enable and disable the converter. When enabled, the MCP1661 will regulate the output voltage; when disabled, the MCP1661 SEPIC Application will disconnect the path from input to output

Features:

• MCP1661 device can be evaluated in two separate applications: Boost and SEPIC

• Start-up Voltage: 2.3V (UVLO Start)

• Input Voltage range (VIN) after start-up: 2.4V to 5.5V,

• Output Voltage:

- 12V (for MCP1661 Boost Application)
- 3.3V (for MCP1661 SEPIC Application)

• Output Current: typical 125 mA @ 12V Output, 3.3V Input (Boost)

Products supported

- MCP1661

<< BACK

P/N: ADM00566

MIC2601 Evaluation Board

Online Info

The MIC2601 is a 1.2MHz/2MHz, PWM DC/DC boost switching regulator. High power density is achieved with the MIC2601's internal 40V/1.2A switch, allowing it to power large loads in a tiny footprint. The MIC2601 implements constant frequency 1.2MHz/2MHz PWM current mode control. The MIC2601 offers internal compensation that provides excellent transient response and output regulation performance. The high frequency operation saves board space by allowing small, low-profile external components. The fixed frequency PWM scheme also reduces spurious switching noise and ripple to the input power source.

Products supported

- MIC2601

P/N: MIC2601YML-EV

<< BACK

MIC2605/6 Evaluation Board

Online Info

The MIC2605/6 is a 1.2MHz/2MHz, PWM DC/DC boost switching regulator. High power density is achieved with the MIC2605/6's internal 40V/0.5A switch and Schottky diode, allowing it to power large loads in a tiny footprint.

The MIC2605/6 implements constant frequency 1.2MHz/2MHz PWM current mode control. The MIC2605/6 offers internal compensation that offers excellent transient response and output regulation performance. The high frequency operation saves board space by allowing small, low-profile external components. The fixed frequency PWM scheme also reduces spurious switching noise and ripple to the input power source.

Products supported

- MIC2605
- MIC2606

P/N: MIC2605YML-EV
MIC2606YML-EV

<< BACK

MIC2619 Evaluation Board

Online Info

The MIC2619 is a 1.2MHz pulse width modulated (PWM) step-up switching regulator that is optimized for low power, high output voltage applications. With a maximum output voltage of 35V, and a switch current of over 350mA, the MIC2619 can easily supply most high voltage bias applications, such as TV tuners.

The MIC2619 implements a constant frequency 1.2MHz PWM current-mode control scheme. The high frequency PWM operation saves board space by reducing external component sizes. The additional benefit of the constant frequency PWM control scheme as opposed to variable frequency control schemes is lower output noise and smaller input ripple injected back to the battery source. The MIC2619 has programmable overvoltage protection to ensure output protection in case of fault condition.

Products supported

- MIC2619

P/N: MIC2619YD6-EV

<< BACK

MIC2875/6 Evaluation Board

Online Info

The MIC2875/6 is a compact and highly-efficient 2MHz synchronous boost regulator with a 4.8A switch. It features a bi-directional load disconnect function which prevents any leakage current between the input and output when the device is disabled. The MIC2875 operates in bypass mode automatically when the input voltage is greater than the target output voltage. At light loads, the boost converter goes to the PFM mode to improve the efficiency.

Products supported

- MIC2875
- MIC2876

P/N: MIC2875-5.0YMT-EV
MIC2875-AYMT-EV
MIC2876-5.0YMT-EV
MIC2876-AYMT-EV

<< BACK

MIC2250 Evaluation Board

Online Info

The MIC2250 is a general purpose DC/DC boost switching regulator that features low noise, EMI reduction circuitry, and high efficiency across a wide output current range. The MIC2250 is optimized for noise-sensitive hand held battery powered applications. A proprietary control method allows low ripple across the output voltage and current ranges. The MIC2250 incorporates a pseudo-random dithering function to reduce EMI levels up to 10dB enabled by the DITH pin. The MIC2250 is designed for use with inductor values from 4.7µH to 22µH, and is stable with ceramic capacitors from 1µF to 22µF. The MIC2250 attains a high peak efficiency up to 90% at 100mA and excellent light load efficiency of 80% at 1mA. High power density is achieved with the MIC2250's internal 34V/2A rated switch, allowing it to power large loads in a tiny footprint.

The MIC2250 evaluation board requires an input power source that is able to deliver at least 3A over the desired input voltage range. For the load, a 10W, variable resistor is recommended or an electronic load (E-Load) capable of constant resistance setting can be used. Note that noise/EMI measurements must employ a resistive load as electronic loads can introduce noise at light loads.

Products supported

- MIC2250

P/N: MIC2250YML-EV

<< BACK

MIC2253 Evaluation Board

Online Info

The MIC2253 is a high power density 1MHz PWM DC/DC boost regulator. The 3.5A minimum switch current limit combined with a 1MHz switching frequency allows the MIC2253 to use smaller inductors and deliver high power in a tiny solution size.

The MIC2253 evaluation board requires a single 10W bench power source adjustable from 2.5V to 10V. The load can either be active (electronic load) or passive (resistor) with the capability to dissipate 7W. It is ideal to have an oscilloscope available to view the circuit waveforms, but not essential. For the simplest test, two voltage meters are required to measure input and output voltage. For efficiency measurements, two voltage meters and two ammeters are required to prevent errors due to measurement inaccuracies.

Products supported

- MIC2253

<< BACK

P/N: MIC2253-06YML-EV

MIC2295 Evaluation Board

Online Info

The MIC2295 is a small 1.2MHz constant frequency PWM DC/DC step-up switching regulator. The MIC2295 evaluation boards requires an input power source that is able to deliver greater than 1.2A at 2.5V.

Products supported

- MIC2295

P/N: MIC2295YML-EV

<< BACK

CAD/CAE Schematic Symbols and Footprints

Online Info

Microchip and Accelerated Designs Inc. have collaborated together to provide Microchip customers with schematic symbols and PCB footprints for Microchip products.

Both PCB footprints and schematic symbols are available for download in a vendor neutral format which can then be exported to the leading EDA CAD/CAE design tools using the Ultra Librarian Reader. The reader is available for free download

Providing components based on parametric data through the Ultra Librarian Reader will allow Microchip customers to reliably create consistent quality CAD entities to an established standard with minimal effort. It is anticipated that this free download service will save Microchip's customers significant time

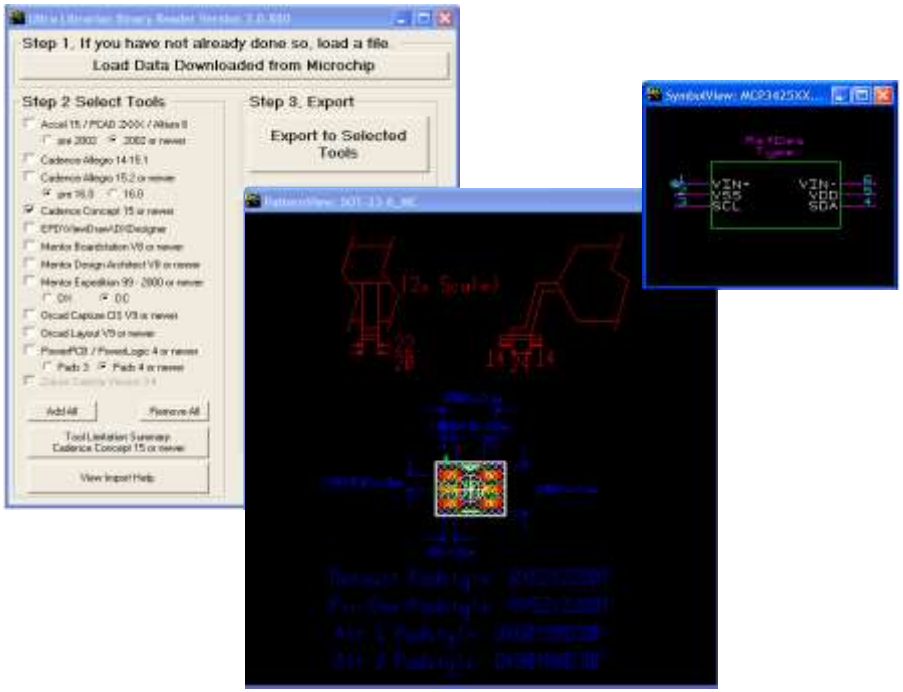

<< BACK

MIC5060 Evaluation Board

Online Info

The MIC5060 MOSFET driver is designed for gate control of N-channel, enhancement-mode, and power MOSFETs used as high-side or low-side switches. The MIC5060 can sustain an on-state output indefinitely. The MIC5060 features an internal charge pump that can sustain a gate voltage greater than the available supply voltage. The driver is capable of turning on a logic-level MOSFET from a 2.75V supply or a standard MOSFET from a 5V supply. The gate-to-source output voltage is internally limited to approximately 15V. The MIC5060 is protected against automotive load dump, reversed battery, and inductive load spikes of –20V.

Products supported

- MIC5060

P/N: MIC5060YML-EV

<< BACK

MIC4478/79/80 Evaluation Board

Online Info

The MIC4478, MIC4479, and MIC4480 are low-side dual MOSFET drivers. They are designed to switch N-channel enhancement type MOSFETs from TTL-compatible control signals for low-side switching applications. The MIC4478 is dual non-inverting, the MIC4479 is dual inverting, and the MIC4480 has complimentary non-inverting and inverting drivers. Short propagation delays and high peak currents produce precise edges and rapid rise and fall times. The MIC4478/4479/4480 are powered from a +4.5V to +32V supply voltage. The on-state gate drive output voltage is approximately equal to the supply voltage (no internal regulators or clamps). In a low-side configuration, the drivers can control a MOSFET that switches any voltage up to the rating of the MOSFET. The MIC4478/4479/4480 are available in an 8-lead SOIC (ePAD and non-ePAD) package and rated for –40°C to +125°C ambient temperature range.

Products supported

- MIC4478
- MIC4479
- MIC4480

P/N: MIC4478YME-EV
MIC4479YME-EV
MIC4480YME-EV

<< BACK

MIC4102 Evaluation Board

Online Info

The MIC4102 are high frequency, 100V Half Bridge MOSFET driver ICs featuring fast 30ns propagation delay times. The low-side and high-side gate drivers are independently controlled and matched to within 3ns typical. The MIC4102 include a high voltage internal diode that charges the high-side gate drive bootstrap capacitor.

Products supported

- MIC4102

P/N: MIC4102YM-EV

<< BACK

MIC4224 Evaluation Board

Online Info

The MIC4224 is a dual 4A, high-speed, low-side MOSFET driver with logic-level driver enables. The device parallel Bipolar and CMOS output stage architecture provides high current throughout the MOSFETs Miller Region allowing the driver to sink and source 4A of peak current from a 12V supply and quickly charge and discharge a 2000pF load capacitance in under 15ns, while allowing the outputs to swing within 0.3V of V DD and 0.16V of ground.

Products supported

- MIC4224

P/N: MIC4224YM-EV
MIC4224YMME-EV

<< BACK

MIC4605 Evaluation Board

Online Info

The MIC4605 is an 85V half-bridge MOSFET driver that features adaptive-dead-time and shoot-through protection. The adaptive-dead-time circuitry actively monitors the half-bridge outputs to minimize the time between high-side and low-side MOSFET transitions, thus maximizing power efficiency. Anti-shoot-through circuitry prevents erroneous inputs and noise from turning both MOSFETS on at the same time.

The MIC4605 also offers a wide 5.5V to 16V operating supply range to maximize system efficiency. The low 5.5V operating voltage allows longer run times in battery-powered applications. Additionally, the MIC4605's adjustable gate drive sets the gate drive voltage to VDD for optimal MOSFET $R_{DS(ON)}$, which minimizes power loss due to the MOSFET's $R_{DS(ON)}$.

Products supported

- MIC4605-1
- MIC4605-2

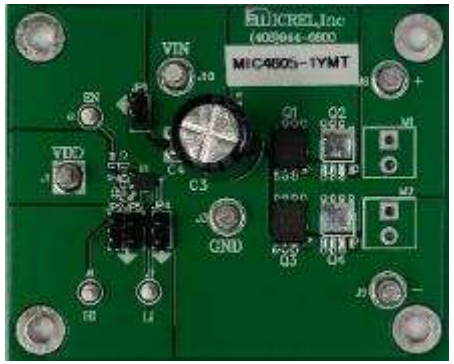

P/N: MIC4605-1YM-EV
MIC4605-1YMT-EV
MIC4605-2YM-EV
MIC4605-2YMT-EV

<< BACK

MIC4606 Evaluation Board

Online Info

The MIC4606 is an 85V full-bridge MOSFET driver that features adaptive dead time and shoot-through protection. The adaptive dead time circuitry actively monitors both sides of the full-bridge to minimize the time between high-side and low-side MOSFET transitions, thus maximizing power efficiency. Antishoot-through circuitry prevents erroneous inputs and noise from turning both MOSFETs of each side of the bridge on at the same time.

The MIC4606 also offers a wide 5.5V to 16V operating supply range to maximize system efficiency. The low 5.5V operating voltage allows longer run times in battery-powered applications. Additionally, the MIC4606's adjustable gate drive sets the gate drive voltage to V_{DD} for optimal MOSFET $R_{DS(ON)}$, which minimizes power loss due to the MOSFET's $R_{DS(ON)}$

.

Products supported

- MIC4606-1
- MIC4606-2

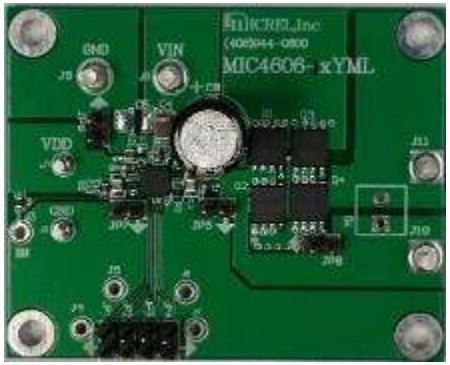

P/N: MIC4606-1YML-EV
MIC4606-2YML-EV

<< BACK

MIC4607 Evaluation Board

Online Info

The MIC4607 is an 85V, three-phase MOSFET driver. The MIC4607 features a fast (35ns) propagation delay time and 20ns driver rise/fall times for a 1nF capacitive load. TTL inputs can be separate high- and low-side signals or a single PWM input with high and low drive generated internally. High- and low-side outputs are guaranteed to not overlap in either mode. The MIC4607 includes overcurrent protection as well as a high-voltage internal diode that charges the high-side gate drive bootstrap capacitor.

A robust, high-speed, and low-power level shifter provides clean level transitions to the high-side output. The robust operation of the MIC4607 ensures that the outputs are not affected by supply glitches, HS ringing below ground, or HS slewing with high-speed voltage transitions. Undervoltage protection is provided on both the low-side and high-side drivers.

.

Products supported

- MIC4607

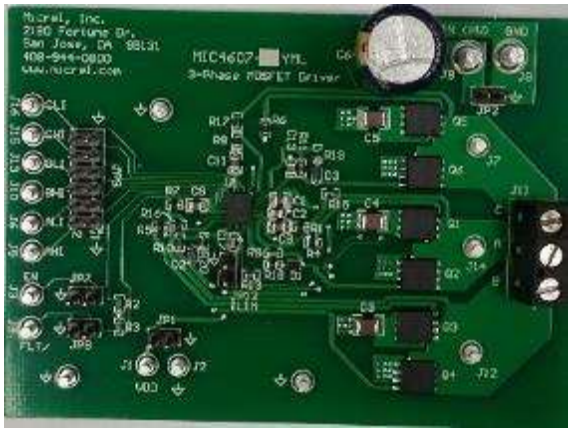

P/N: MIC4607-1YML-EV

<< BACK

MIC4608 Evaluation Board

Online Info

The MIC4608 is a 600V Half Bridge IGBT or MOSFET driver. The MIC4608 features a 450ns propagation delay including a 200ns input filtering time to prevent unwanted pulses. The low-side and high-side gate drivers are independently controlled (with shoot thru protection) or controlled with a single PWM signal. The MIC4608 has TTL input thresholds.

The robust operation of the MIC4608 ensures that the outputs are not affected by supply glitches, HS ringing below ground, or HS slewing with high-speed voltage transitions. Undervoltage protection is provided on both the low-side and high-side drivers.

.

Products supported

- MIC4608

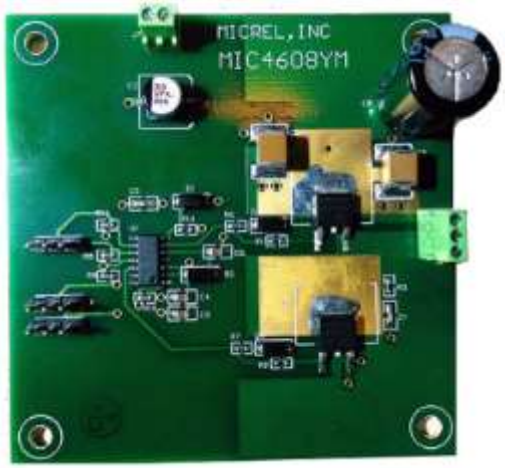

P/N: MIC4608YM-EV

<< BACK

MIC4414/5 Evaluation Board

Online Info

The MIC4414 and MIC4415 are low-side MOSFET drivers designed to switch an N-channel enhancement type MOSFET in low-side switch applications. The MIC4414 is a non-inverting driver and the MIC4415 is an inverting driver. These drivers feature short delays and high peak current to produce precise edges and rapid rise and fall times.

Products supported

- MIC4414
- MIC4415

P/N: MIC4414YFT-EV
MIC4415YFT-EV

<< BACK

MIC5019 Evaluation Board

Online Info

The MIC5019 is a high-side MOSFET driver with integrated charge pump designed to switch an N-Channel enhancement type MOSFET control signal in high-side or low–side applications.

The MIC5019 operates from a 2.7V to 9V supply, and generates gate voltages of 9.2V from a 3V supply, and 16V from a 9V supply. The device consumes a low 77µA of supply current and less than 1µA of supply current in shutdown mode.

Products supported

- MIC5019

P/N: MIC5019YFT-EV

<< BACK

MIC45116 Evaluation Board

Online Info

The MIC45116 is a synchronous step-down regulator module, featuring a unique adaptive ON-time control architecture. The module incorporates a DC/DC controller, power MOSFETs, bootstrap diode, bootstrap capacitor, and an inductor in a single package; simplifying the design and layout process for the end user.

This highly integrated solution expedites system design and improves product time-to-market. The internal MOSFETs and inductor are optimized to achieve high efficiency at a low output voltage. The fully optimized design can deliver up to 6A current under a wide input voltage range of 4.75V to 20V without requiring additional cooling.

Products supported

- MIC45116-1
- MIC45116-2

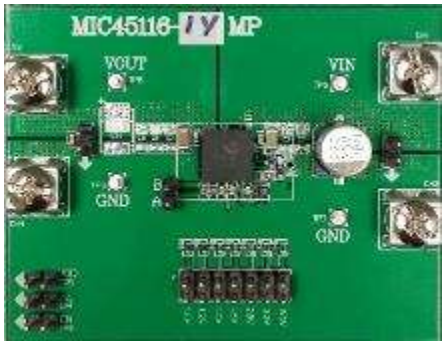

P/N: MIC45116-1YMP-EV
MIC45116-2YMP-EV

<< BACK

MIC45205 Evaluation Board

Online Info

The MIC45205 is a synchronous step-down regulator module, featuring a unique adaptive ON-time control architecture. The module incorporates a DC-to-DC controller, power MOSFETs, bootstrap diode, bootstrap capacitor, and an inductor in a single package; simplifying the design and layout process for the end user.

This highly-integrated solution expedites system design and improves product time-to-market. The internal MOSFETs and inductor are optimized to achieve high efficiency at a low output voltage. The fully-optimized design can deliver up to 6A current under a wide input voltage range of 4.5V to 26V, without requiring additional cooling.

Products supported

- MIC45205-1
- MIC45205-2

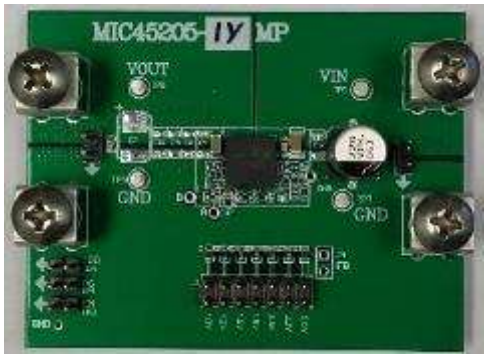

P/N: MIC45205-1YMP-EV
MIC45205-2YMP-EV

<< BACK

MIC45208 Evaluation Board

Online Info

The MIC45208 is a synchronous step-down regulator module, featuring a unique adaptive ON-time control architecture. The module incorporates a DC-to-DC controller, power MOSFETs, bootstrap diode, bootstrap capacitor, and an inductor in a single package; simplifying the design and layout process for the end user.

This highly-integrated solution expedites system design and improves product time-to-market. The internal MOSFETs and inductor are optimized to achieve high efficiency at a low output voltage. The fully-optimized design can deliver up to 10A current under a wide input voltage range of 4.5V to 26V, without requiring additional cooling.

Products supported

- MIC45208-1
- MIC45208-2

P/N: MIC45208-1YMP-EV
MIC45208-2YMP-EV

<< BACK

MIC45212 Evaluation Board

Online Info

The MIC45212 is a synchronous step-down regulator module, featuring a unique adaptive ON-time control architecture. The module incorporates a DC-to-DC controller, power MOSFETs, bootstrap diode, bootstrap capacitor, and an inductor in a single package; simplifying the design and layout process for the end user.

This highly-integrated solution expedites system design and improves product time-to-market. The internal MOSFETs and inductor are optimized to achieve high efficiency at a low output voltage. The fully-optimized design can deliver up to 14A current under a wide input voltage range of 4.5V to 26V, without requiring additional cooling.

.

Products supported

- MIC45212-1
- MIC45212-2

P/N: MIC45212-1YMP-EV
MIC45212-2YMP-EV

<< BACK

MIC28304 Evaluation Board

Online Info

The MIC28304 is synchronous step-down regulator module, featuring a unique adaptive ON-time control architecture. The module incorporates a DC-to-DC controller, power MOSFETs, bootstrap diode, bootstrap capacitor and an inductor in a single package. The MIC28304 operates over an input supply range from 4.5V to 70V and can be used to supply up to 3A of output current. The output voltage is adjustable down to 0.8V with a guaranteed accuracy of ±1%. The device operates with programmable switching frequency from 200kHz to 600kHz.

Products supported

- MIC28304

P/N: MIC28304-1-12V-EV
MIC28304-1-5V-EV
MIC28304-2-12V-EV
MIC28304-2-5V-EV

<< BACK

MIC33030 Evaluation Board

Online Info

The MIC33030 is a high-efficiency, 8MHz, 400mA synchronous buck regulator with an internal inductor and HyperLight Load® mode. HyperLight Load® provides very high efficiency at light loads and ultra-fast transient response that is perfectly suited for supplying processor core voltages. An additional benefit of this proprietary architecture is the very low output ripple voltage throughout the entire load range with the use of small output capacitors.

Products supported

- MIC33030

P/N: MIC33030-4YHJ-EV
MIC33030-AYHJ-EV

<< BACK

MIC33050 Evaluation Board

Online Info

The MIC33050 is a high efficiency 600mA PWM synchronous buck (step-down) regulator with internal inductor featuring HyperLight Load®, a patent-pending switching scheme that offers best-in-class light load efficiency and transient performance while providing very small external components and low output ripple at all loads.
The MIC33050 also has a very low typical quiescent current draw of 20µA and can achieve over 83% efficiency even at 1mA.

Products supported

- MIC33050

P/N: **MIC33050-4YHL-EV**
MIC33050-AYHL-EV
MIC33050-CYHL-EV
MIC33050-GYHL-EV
MIC33050-SYHL-EV

<< BACK

MIC33153 Evaluation Board

Online Info

The MIC33153 is a high-efficiency 4MHz 1.2A synchronous buck regulator with an internal inductor, HyperLight Load®mode, Power Good (PG) output indicator, and programmable soft start. HyperLight Load® provides very high efficiency at light loads and ultra-fast transient response which makes the MIC33153 perfectly suited for supplying processor core voltages. An additional benefit of this proprietary architecture is very low output ripple voltage throughout the entire load range with the use of small output capacitors.

Products supported

- MIC33153

P/N: MIC33153-4YHJ-EV
MIC33153YHJ-EV

<< BACK

MIC3385 Evaluation Board

Online Info

The MIC3385 is a high efficiency inductorless buck regulator that features a LowQ® LDO standby mode that draws only 18µA of quiescent current. The MIC3385 requires no external inductor enabling an ultra-low noise, small size, and high efficiency solution for portable power applications.

In PWM mode, the MIC3385 operates with a constant frequency 8MHz PWM control. Under light load conditions, such as in system sleep or standby modes, the PWM switching operation can be disabled to reduce switching losses. In this light load LowQ® mode, the LDO maintains the output voltage and draws only 18µA of quiescent current. The LDO mode of operation saves battery life while not introducing spurious noise and high ripple as experienced with pulse skipping or bursting mode regulators.

Products supported

- MIC3385

P/N: MIC3385YHL-EV

<< BACK

MIC45404 Evaluation Board

Online Info

The MIC45404 device is a 19V, 5A ultra-low profile, synchronous step-down regulator module optimized for high efficiency at low output voltages. The module incorporates a DC-to-DC regulator, bootstrap capacitor, high-frequency input capacitor and an inductor in a single package. The module pinout is optimized to simplify the Printed Circuit Board (PCB) layout process. This highly integrated solution expedites system design and improves product time to market. The internal MOSFETs and inductor are optimized to achieve high efficiency at low output voltage. Due to the fully optimized design, MIC45404 can deliver up to 5A current with a wide input voltage range of 4.5V to 19V.

Products supported

- MIC45404

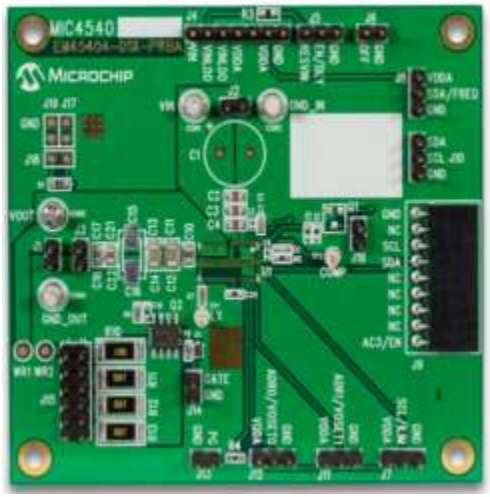

P/N: MIC45404YMP-EV

<< BACK

MIC95410 Evaluation Board

Online Info

The MIC95410 is a high-side load switch for computing and ultra-dense embedded computing boards where high-current low-voltage rails from sub-1V to 5.5V have to be sectioned. The integrated 6.6mΩ RDS(ON) N-channel MOSFET ensures low voltage drop and low power dissipation while delivering up to 7A of load current.

The basic parameters of the MIC95410 evaluation board are the IN supply of 1V to 5.5V and the separated bias voltage from 2.7V to 9V. It also includes a TTL-logic level turn-on command (CTL) and an output discharge function when disabled.

Products supported

- MIC95410

P/N: MIC95410YFL-EV

<< BACK

MIC94161/2/3/4/5 Evaluation Board

Online Info

The MIC94161/2/3/4/5 is a family of high-side load switches designed to operate from 1.7V to 5.5V input voltage. The load switch pass element is an internal 14.5mΩ RDSON N-Channel MOSFET which enables the device to support up to 3A of continuous current. Additionally, the load switch supports 1.5V logic level control and shutdown features in a tiny 1.5mm × 1mm 6-ball WLCSP package. The MIC9416x provides reverse current protection when the device is disabled. The device will not allow the flow of current from the output to the input when the device is turned OFF. Additionally, the MIC94161 features overvoltage protection to protect the load when the input voltage is above 4.55V, as well as a precise enable threshold which keeps the MIC94161 in the default OFF state until the EN pin rises above 1.15V.

Products supported

- MIC94161
- MIC94162
- MIC94163
- MIC94164
- MIC94165

P/N: **MIC94161YCS-EV**
MIC94162YCS-EV
MIC94163YCS-EV
MIC94164YCS-EV
MIC94165YCS-EV

<< BACK

MIC2026A Evaluation Board

Online Info

The MIC2026 and MIC2076 are high-side MOSFET switches optimized for general-purpose power distribution requiring circuit protection. The MIC2026/76 are internally current limited and have thermal shutdown that protects the device and load. The MIC2076 offers "smart" thermal shutdown that reduces current consumption in fault modes. When a thermal shutdown fault occurs, the output is latched off until the faulty load is removed. Removing the load or toggling the enable input will reset the device output. Both devices employ soft-start circuitry that minimizes inrush current in applications where highly capacitive loads are employed. A fault status output flag is asserted during overcurrent and thermal shutdown conditions. Transient faults are internally filtered. The MIC2026/76 are available in 8-pin DIP or 8-pin SOIC.

Products supported

- MIC2026A

P/N: MIC2026A-1YM-EV

<< BACK

MIC2033 Evaluation Board

Online Info

The MIC2033 evaluation board requires a single power supply to provide Vin. The Vin power supply must be able to deliver a minimum of 2.5V and more than 1.5A capability. The output load can either be active or passive.

Products supported

- MIC2033

P/N: MIC2033-05BYMT-EV
MIC2033-12AYMT-EV

<< BACK

MIC2039 Evaluation Board

Online Info

The MIC2039 is a high-side MOSFET power distribution switch providing increased system reliability by using 5% current limit accuracy.

The MIC2039 has an operating input voltage range from 2.5V to 5.5V, is internally current limited, and has thermal shutdown to protect the device and system. The MIC2039 is offered with either active-high or active-low logic level enable input controls. It has an open drain fault status output flag with a built-in 32ms delay that asserts low during overcurrent or thermal shutdown conditions.

The MIC2039 evaluation board requires a single power supply to provide VIN. The VIN power supply must be able to deliver a minimum of 2.5V and more than 1.5A capability. The output load can either be active or passive.

Products supported

- MIC2039

P/N: MIC2039-1AYMT EV
MIC2039-1AYMT EV

<< BACK

UCS2112 Evaluation Board

Online Datasheet

The UCS2112 Dual USB Port Power Evaluation Board demonstrates the features of two USB ports, capable of data transfer and charging up to 6A. Charging limits, accumulated current, alerts and attachment status can all be configured, exercised and/or observed on a graphical user interface.

Features:

- The Graphical User Interface running on the PC allows –
  - advanced configuration and monitoring of the –
  - UCS2112 registers (current measurement and –
  - accumulated charge indication, current limit -
  - configuration, status indication)
- LED indicators for supply voltage detection, fault –
  - indication and attach detection on each port.

Products supported:

- UCS2112

P/N: ADM00639

<< BACK

MCP1630 Dual Output Buck Converter Ref. Design

Online Info

The MCP1630 Dual Buck Demo Board is a complete, stand-alone, dual-output power supply capable of 20A per output, powered from a +12V input source. This board utilizes Microchip's MCP1630 (high-speed PIC® MCU PWM MSOP8), PIC16F684 (MCU Flash TSSOP13) and MCP6231U (Op Amp SC-70). The input voltage range for the demo board is +9.0V to +13.5V. Both adjustable regulated outputs are capable of 20A.

Products supported

- MCP1630
- MCP6231
- PIC16F684

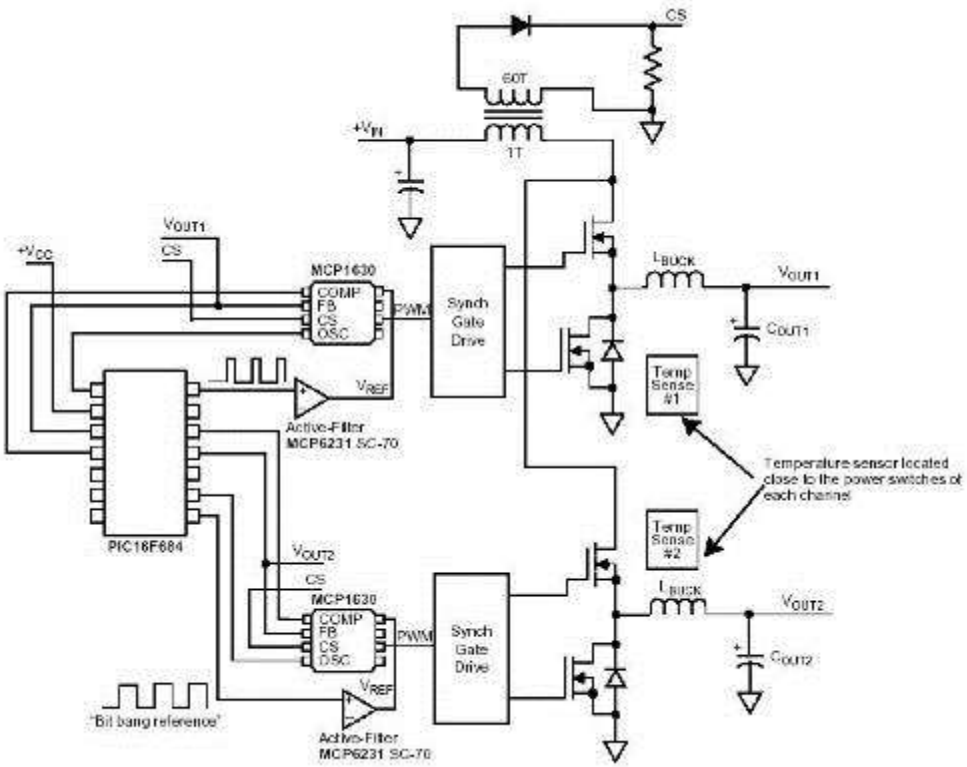

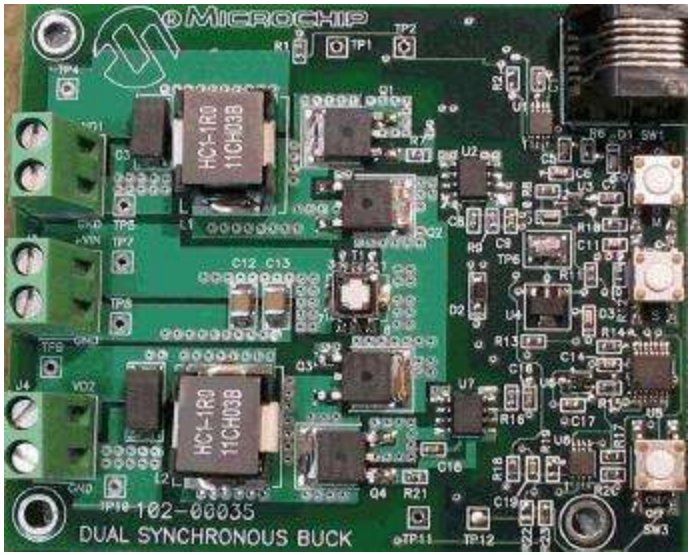

P/N: MCP1630RD-DDBK1

<< BACK

MCP1630 1A Bias Supply Demo Board

Online Info

The MCP1630 1A Bias Supply Demo Board is a complete, step-down, switch-mode, DC-DC power converter. The demo board generates a regulated output voltage for systems requiring a bias of 3.3V or 5V at load currents up to 1A. Different output voltages can be obtained with minor modifications to the firmware and/or hardware.

Products supported

- MCP1630
- MCP1701A
- PIC10F200

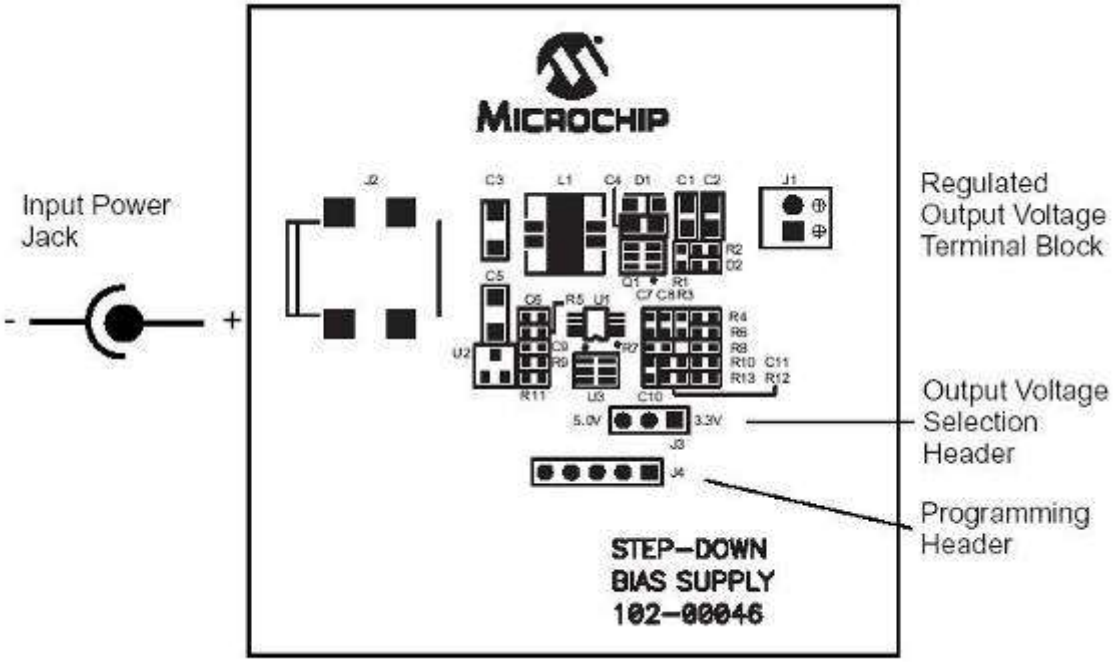

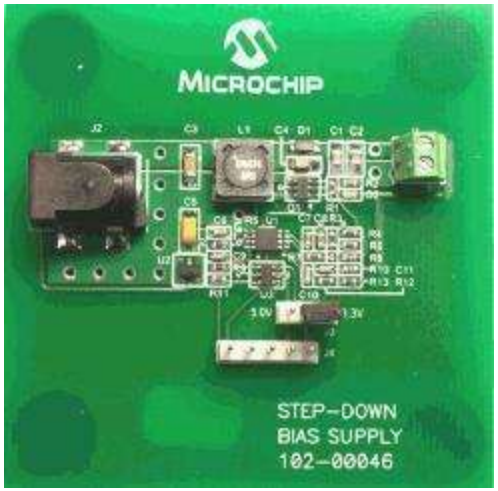

P/N: MCP1630DM-DDBK1

<< BACK

MCP1630 Coupled Inductor Boost Demo Board

Online Info

The MCP1630 Coupled Inductor Boost Converter Demo Board demonstrates Microchip's High-Speed Pulse Width Modulator (PWM) used in a coupled inductor design. When used in conjunction with a microcontroller, the MCP1630 device will control the power system duty cycle to provide different regulated output voltages using push button S1. The PIC12F683 microcontroller is used to generate oscillator pulses, can also b programmed to monitor the board ambient temperature using the MCP9700 Linear Active Thermistor™ device and provide different regulated output voltages for different thermal readings. The MCP1630 device generates duty cycle based on various external inputs. External signals include the input oscillator pulses, reference voltage form PIC12F683 device, and the feedback voltage. The output signal is a square-wave pulse given to drive the MOSFET.

Products supported

- MCP1630
- PIC12F683
- MCP9700

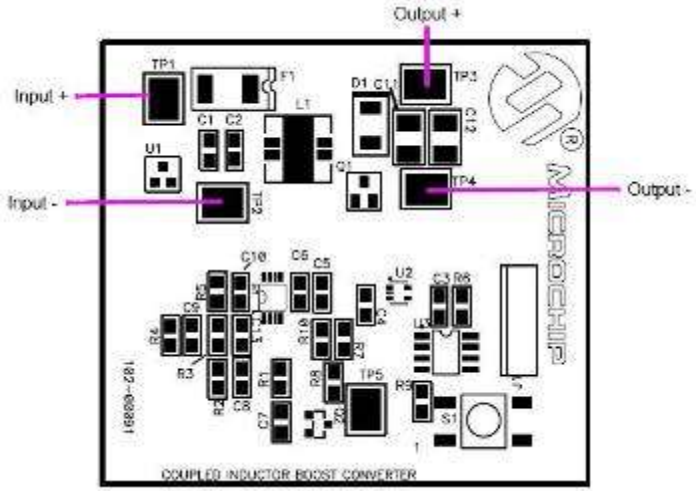

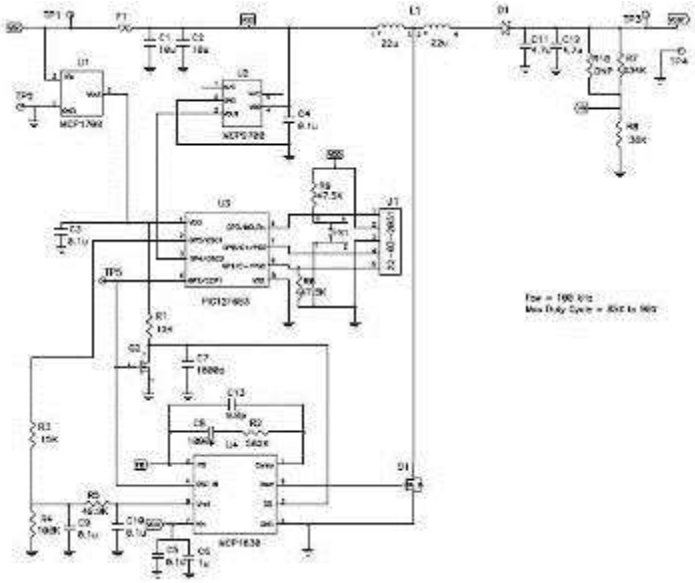

P/N: MCP1630DM-DDBS2

<< BACK

MCP1630 Boost Mode LED Driver Demo Board

Online Info

The MCP1630 Boost Mode LED Driver Demo Board is a step-up, switch-mode, DC-DC converter used for power LED applications. The demo board provides a 350mA or 700mA constant current source. Other output currents can be obtained with minor modifications to the board. The demo board utilized Microchip's MCP1630V high-speed pulse width modulator (PWM). The 8-pin MCP1630 device contains the analog components necessary for an analog switch-mode control loop including an error amplifier, PWM comparator, and a high current driver pin. The switching frequency and maximum duty cycle for the MCP1630V are determined by an external clock source. An 8-pin PIC12F683 microcontroller is used to provide a 500 kHz switching clock for the MCP1630V. In addition, the PIC12F683 firmware supervises the circuit output voltage and can optionally dim the LEDs when a potentiometer is attached.

Features:

- Compact size with high output power
- High efficiency over entire operating input voltage range
- Selectable output current: 350mA or 700mA
- Maximum output power: 30W
- Optional software dimming control
- Factory programmed source code provided
- Switching frequency, maximum duty cycle, and MCP1630 reference voltage can be modified in firmware

Products supported

- MCP1630V
- PIC12F683
- MCP1702

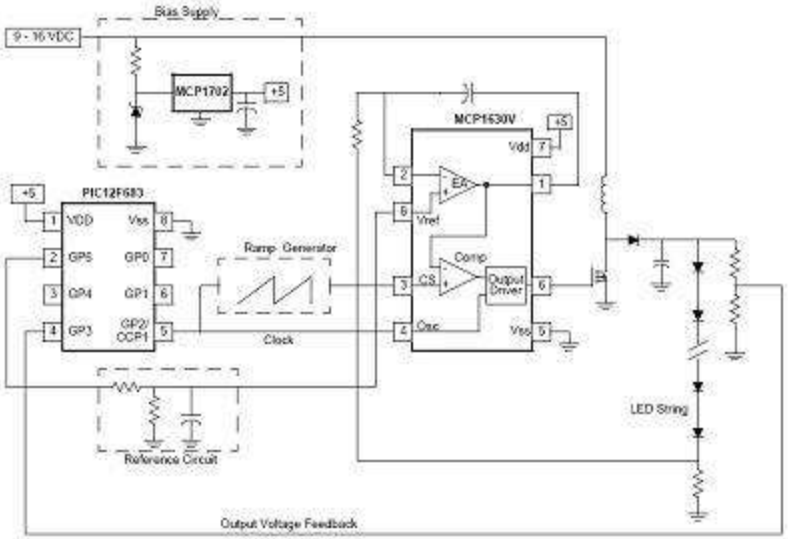

P/N: MCP1630DM-LED2

<< BACK

MCP1630 Automotive Boost Converter Demo Board

Online Info

The MCP1630 Automotive Input Boost Converter Demo Board demonstrates the use of a conventional boost topology with automotive input. The board also serves as a platform to evaluate the MCP1630/V devices.

The MCP1630/V inputs were developed to be easily attached to the I/O of a microcontroller. The microcontroller unite (MCU) supplies the oscillator pulses and reference voltage (V_{REF}) to the MCP1630/V devices to provide the most flexible and adaptable power system. The power system switching frequency and maximum duty cycle are stet using the I/O of the MCU. The reference input to the high-speed PWM can be external, a D/A Converter (DAC) output or as simple as an I/O output from the MCU. This enables the power system to adapt to many external signals.

The board utilizes Microchip'sMCP1630/V integrated with the PIC12F683 Flash-based MCU. The converter is capable of delivering an output voltage of 36.5V at 400mA load current with maximum power of 14.6W.

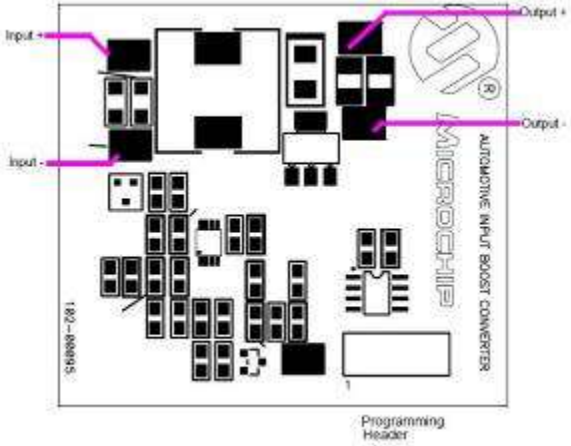

Products supported

- MCP1630
- PIC12F683

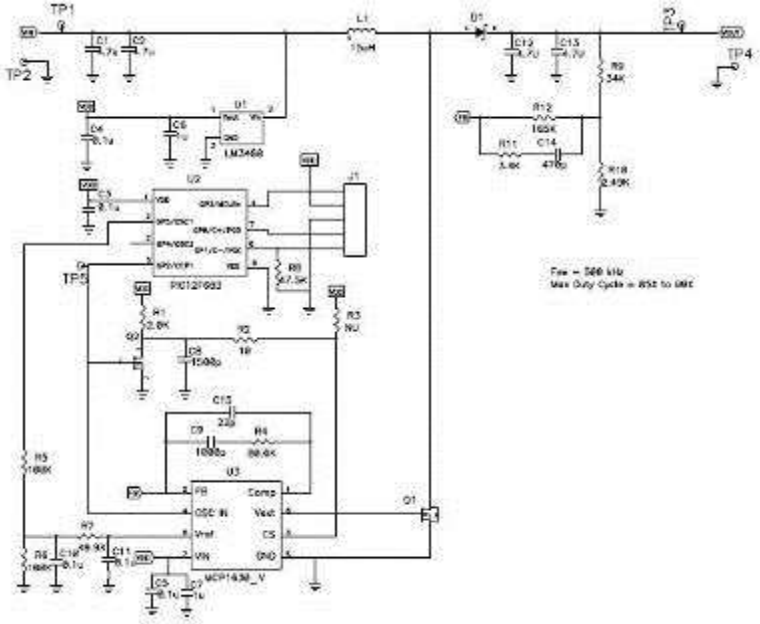

P/N: MCP1630DM-DDBS1

<< BACK

MCP1630 Automotive Triple Converter Demo Board

Online Info

The MCP1630 Automotive Input Triple Output Converter Demo Board demonstrates the use of a SEPIC topology for Automotive applications. The board also serves as a platform to evaluate the MCP1630 device.

Products supported

- MCP1630
- PIC12F683

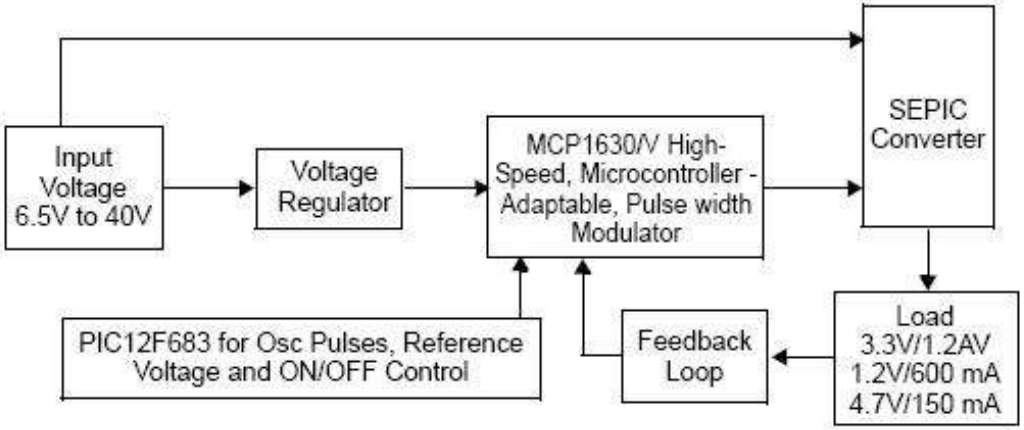

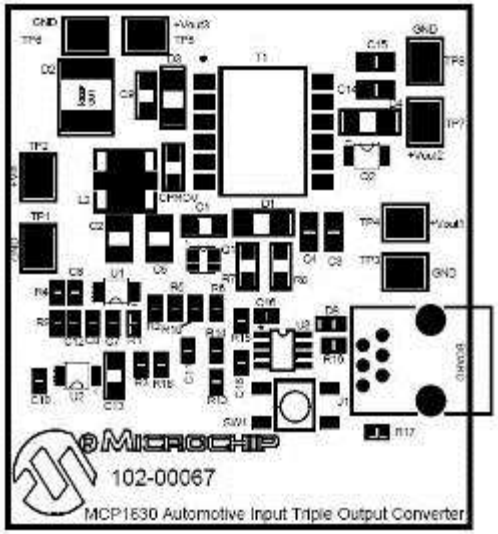

P/N: MCP1630DM-DDBK4

<< BACK

MCP1630 Li-Ion Battery Charger Reference Design

Online Info

The MCP1630 Low-Cost Li-Ion Battery Charger is used to evaluate Microchip's MCP1630 in a SEPIC power converter application. As provided, the MCP1630 Low-Cost Li-Ion Battery Charger is capable of charging a single-cell, Li-Ion battery pack form an input voltage of 6V to 18V. The MCP1630 Low-Cost Li-Ion Battery Charger provides a constant current, constant voltage charge with preconditioning, cell temperature monitoring and battery pack fault monitoring. Also, the charger provides a status or fault indication. The MCP1630 Low-Cost Li-Ion Battery Charger automatically detects the insertion or removal of a battery pack.

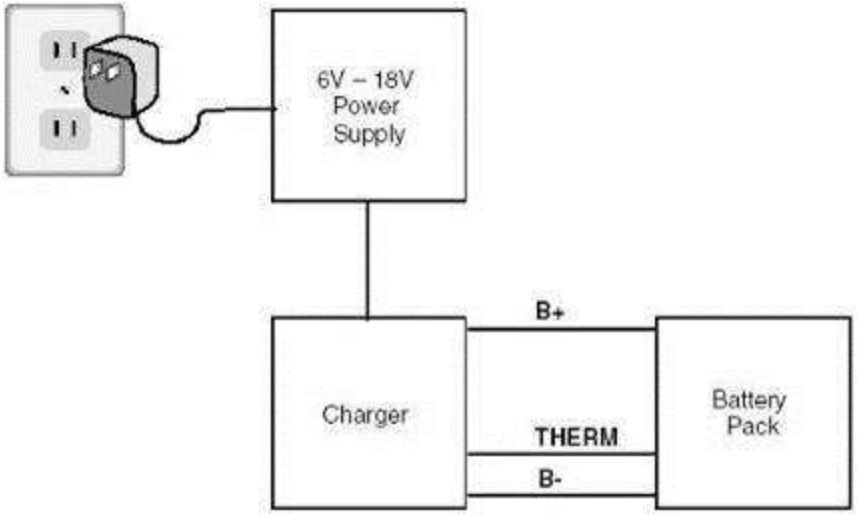

Maximum Charge Current = 2A

Products supported

- MCP1630
- MCP6292
- PIC12F683

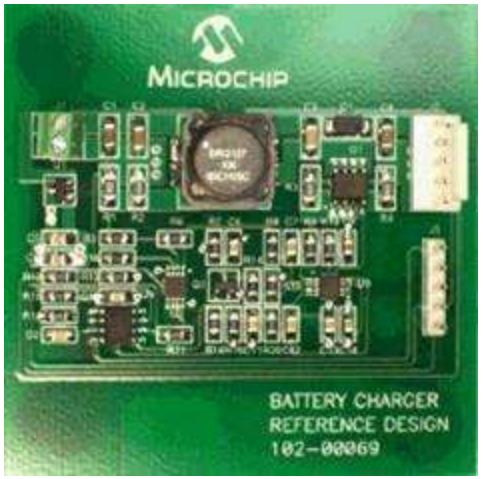

<< BACK to Battery Boards

<< BACK to Switching Controller Boards

P/N: MCP1630RD-LIC2

MCP1630 NiMH Battery Charger Reference Design

Online Info

The MCP1630 Low-Cost NiMH Battery Charger Reference Design is used to charge three series cell NiMH or NiCd batteries. The board uses the MCP1630 high-speed analog PWM and PIC12F683 to generate the charge algorithm for NiMH or NiCd batteries.

Products supported

- MCP1630
- MCP6292
- PIC12F683
- MCP1702

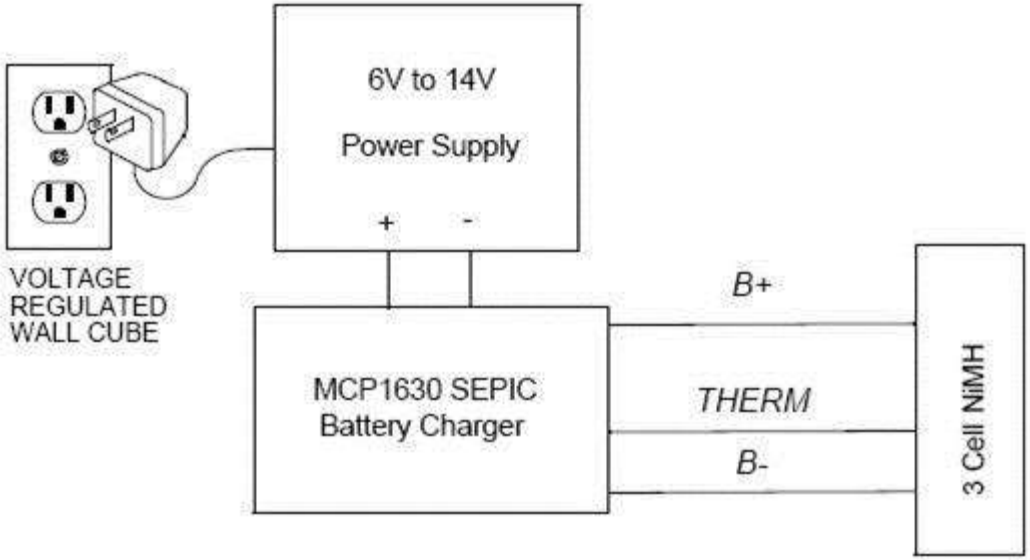

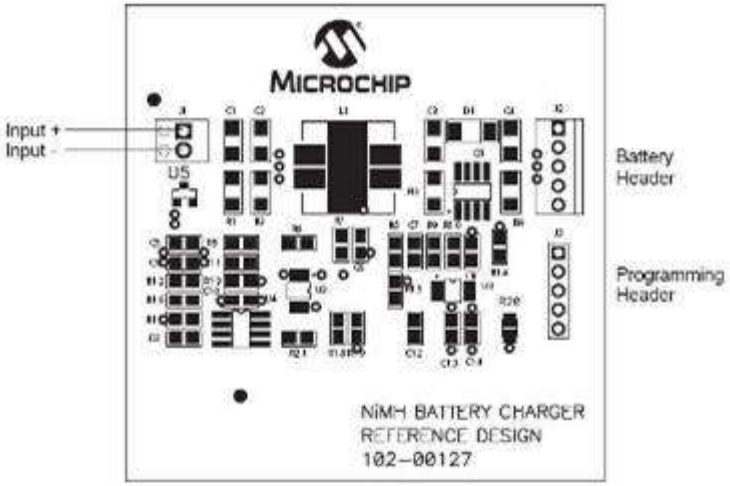

<< BACK to Battery Boards

<< BACK to Switching Controller Boards

P/N: MCP1630RD-NMC1

MCP1630 Li-Ion Multi-Bay Battery Reference Design

Online Info

The MCP1630 Li-Ion Multi-Bay Battery Charger is a complete, stand-alone, constant-current, constant-voltage battery charger for single-cell Li-Ion battery packs. Different battery chemistries (i.e. three NiMH or NiCd batteries connected in series) can be charged with minor modifications to the firmware. This board utilizes Microchip's MCP1630 high-speed PWM, MCP6292 dual op-amp and PIC18F2410 Flash MCU. The input voltage range is 10V to 28V. The output is capable of charging at a fast-charge rate of 2A constant current.

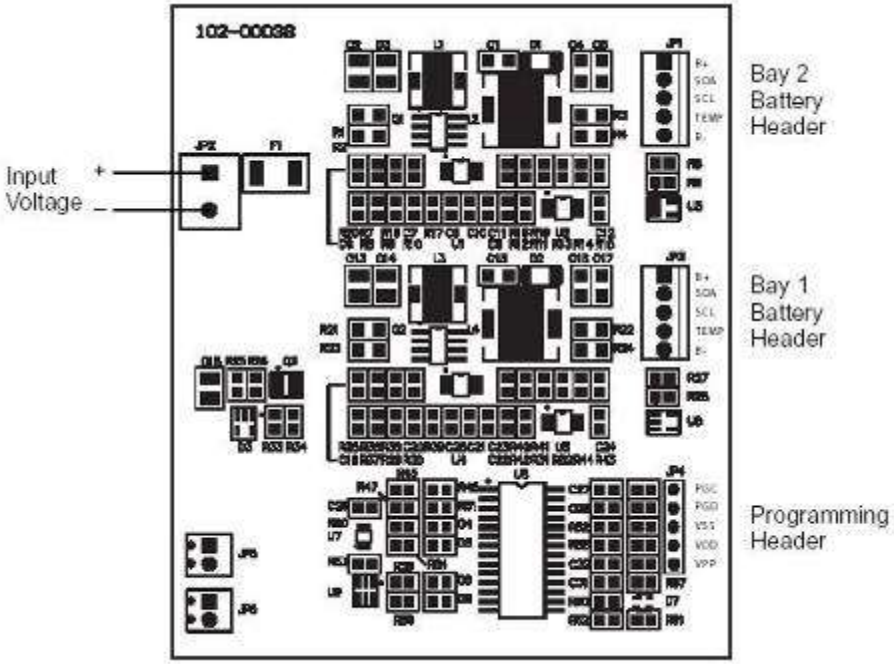

Products supported

- MCP1630
- MCP6292
- PIC18F2410

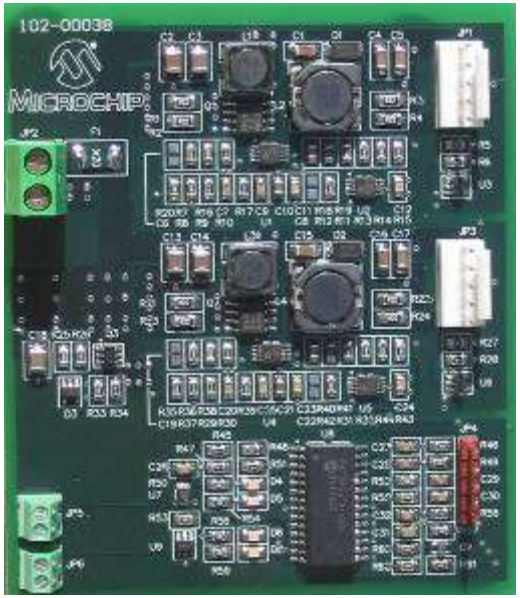

<< BACK to Battery Boards

<< BACK to Switching Controller Boards

P/N: MCP1630RD-LIC1

MCP1630 NiMH Demo Board

Online Info

The MCP1630 NiMH Demo Board is a complete stand-alone constant current battery charger and simple fuel gauge for four NiMH series batteries. This board utilizes Microchip's MCP1630 high-speed PWM, MCP1700 LDO Regulator, MCP6042T Op-Amp, PIC16LF818 Flash MCU, TC54 Voltage detector and TC1047A Temperature-Voltage Converter. The input voltage range for the demo board is 8V to 15V. The output is capable of charging four NiMH batteries with up to 1.6V per cell at a fast charge rate of 500mA constant current.

Products supported

- MCP1630
- MCP6042
- TC1047A
- MCP1700
- TC54
- PIC16LF818

MCP1630 NiMH Battery Charger and Fuel Gauge Application Diagram

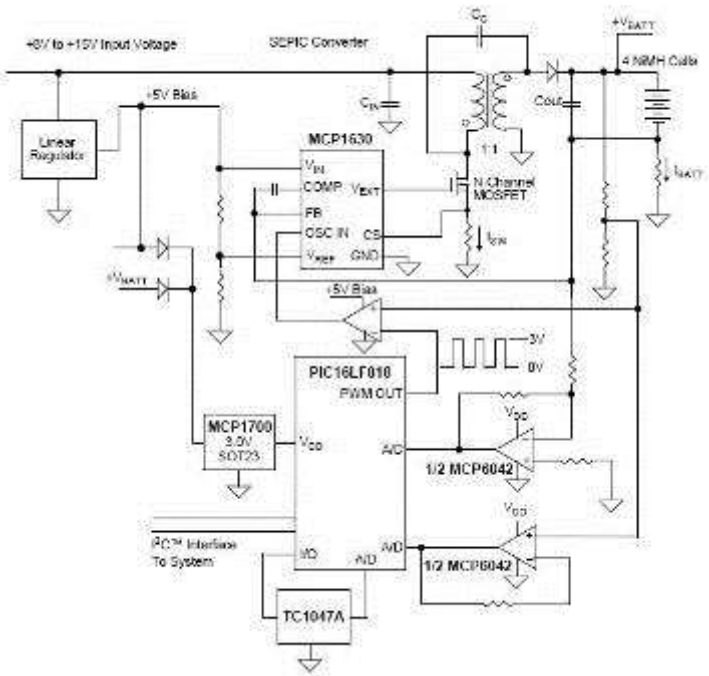

<< BACK to Battery Boards

<< BACK to Switching Controller Boards

P/N: MCP1630DM-NMC1

MCP1630V Bidirectional 4-cell Li-Ion Charger Ref Design

Online Info

The MCP163V Bidirectional 4 Cell Li-Ion Charger Reference Design demonstrates the use of a bidirectional buck-boost converter used to charge multiple series cell Li-Ion batteries with the presence of an input source (boost) and provide a regulated output voltage when the input source is removed (buck). The board also serves as a platform to evaluate the MCP1630V device.

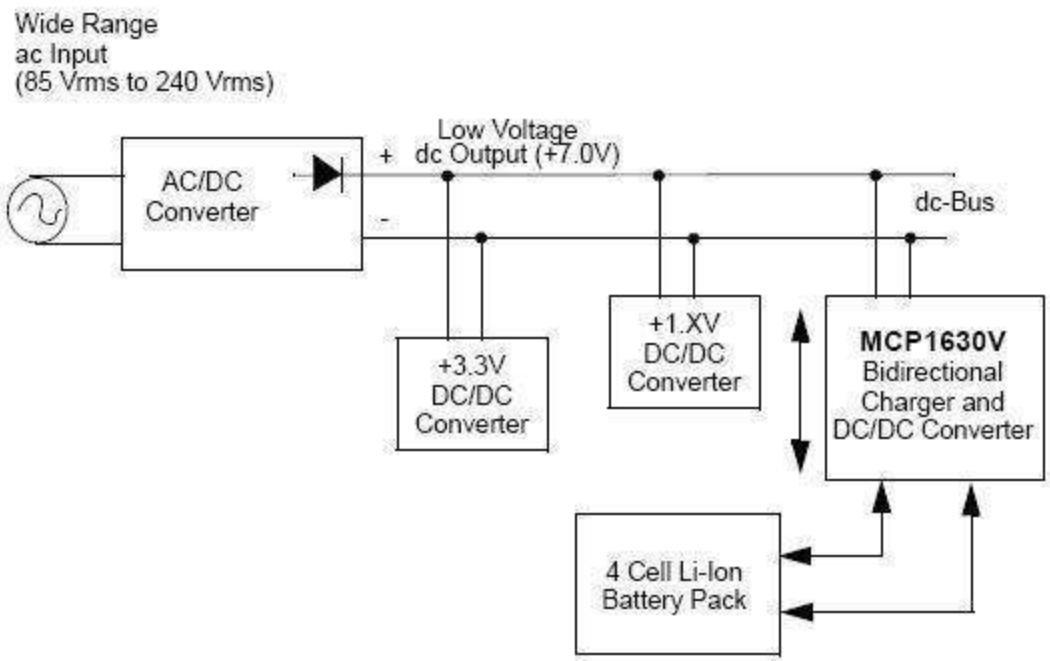

Products supported

- MCP1630V
- MCP6022
- PIC16F88

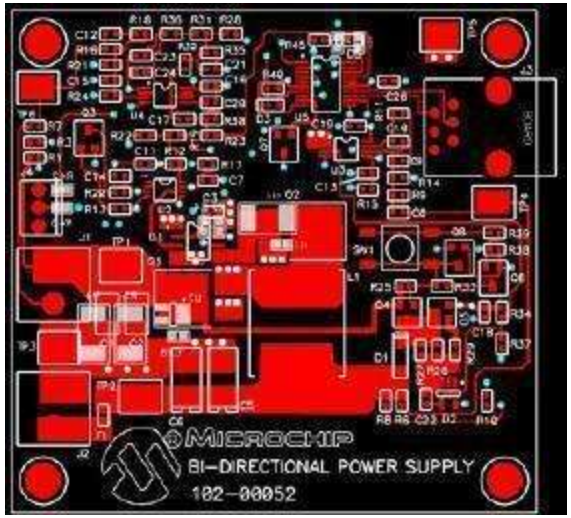

<< BACK to Battery Boards

<< BACK to Switching Controller Boards

P/N: MCP1630RD-DDBK3

MCP1631HV Multi-Chemistry Battery Charger Ref Design

Online Info

The MCP1631 Multi-Chemistry Battery Charger Reference Design is a complete stand-alone constant current battery charger for NiMH, NiCd or constant current / constant voltage for Li-Ion battery packs. When charging NiMH or NiCd batteries, the reference design is capable of charging one, two, three or four batteries connected in series. If Li-Ion chemistry is selected, the board is capable of charging one or two series batteries. This board utilizes Microchip's MCP1631HV (high-speed PIC® MCU PWM TSSOP-20) and PIC16F883 (28 pin SSOP). The input voltage range for the demo board is 5.5V to 16V.

Products supported

- MCP1631HV
- PIC16F883

<< BACK to Battery Boards

<< BACK to Switching Controller Boards

P/N: MCP1631RD-MCC1

MCP1631HV Programmable Current Source Design

Online Info

The MCP1631HV Digitally Controlled Programmable Current Source Reference Design is used to drive and dim one or more power LEDs in a series or parallel topology (depending on the LED's capability).
The reference design may also be used to charge one to four cell NiMH/NiCd or one to two cell Li-Ion battery packs. The board uses the MCP1631HV high-speed analog PWM controller and PIC16F616 microcontroller to generate the proper dimming ratio for LEDs or charge algorithm for NiMH, NiCd and Li-Ion batteries. The boards is used to evaluate Microchip's MCP1631HV in a SEPIC power converter application.

Products supported

- MCP1631HV
- PIC16F616

<< BACK to Battery Boards

<< BACK to Switching Controller Boards

P/N: MCP1631RD-DCPC1

MCP73831 Eval Kit

Online Info

The MCP73831 Evaluation Board is an evaluation and demonstration tool for Microchip's MCP73831 miniature single-cell, fully-integrated Li-Ion, Li-Polymer charge-management controllers.
Two evaluation boards are provided in the MCP73831 Evaluation kit. The boards are set up to evaluate simple, stand-alone, linear charging of single-cell Li-Ion/Li-Polymer battery packs (the battery packs are not included). Each board design provides constant current charging followed by constant voltage charging with automatic charge termination. In addition, the MCP73831-2AC board provides preconditioning of deeply depleted cells.

Products supported

- MCP73831

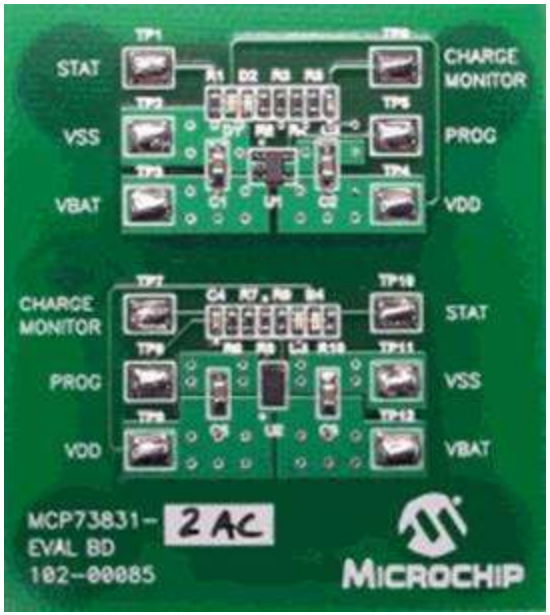

<< BACK

P/N: MCP73831EV

MCP73833/4 Eval Board

Online Info

The MCP73833 Li-Ion Battery Charger Evaluation Board is an evaluation and demonstration tool for Microchip's MCP73833/4 Stand-Alone Linear Li-Ion/Li-Polymer Charge Management Controllers.

The evaluation board has two circuits provided with one circuit fully assembled and tested. Each circuit is set up to evaluate simple, stand-alone, linear charging of single cell Li-Ion/Li-Polymer battery packs (the battery packs are not included).

The circuits can be evaluated independently . Each circuit design provides constant current charging followed by constant voltage charging with automatic charge termination and battery temperature monitoring. In addition, the assembled MCP73833/4-FC circuit provides preconditioning of deeply depleted cells.

Products supported

- MCP73833
- MCP73834

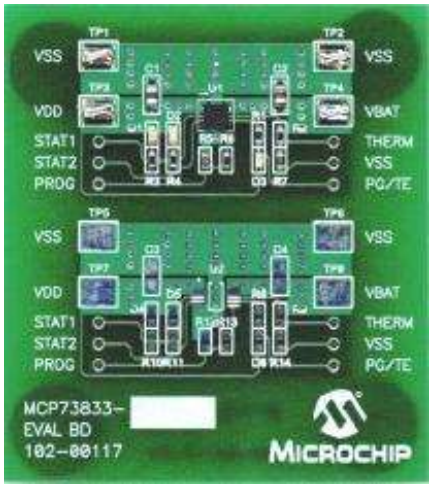

<< BACK

P/N: MCP73833EV

MCP73855 Eval Board

Online Info

The MCP73855 Evaluation Board is an evaluation and demonstration tool for Microchip Technology's MCP73855 USB Compatible Li-Ion/Li-Polymer Charge Management Controller. The design provides for dynamic versatility while being able to handle accurate measurements.
The MCP73855 Evaluation Board allows for the evaluation of the MCP73855 device in a variety of applications.

Products supported

- MCP73855

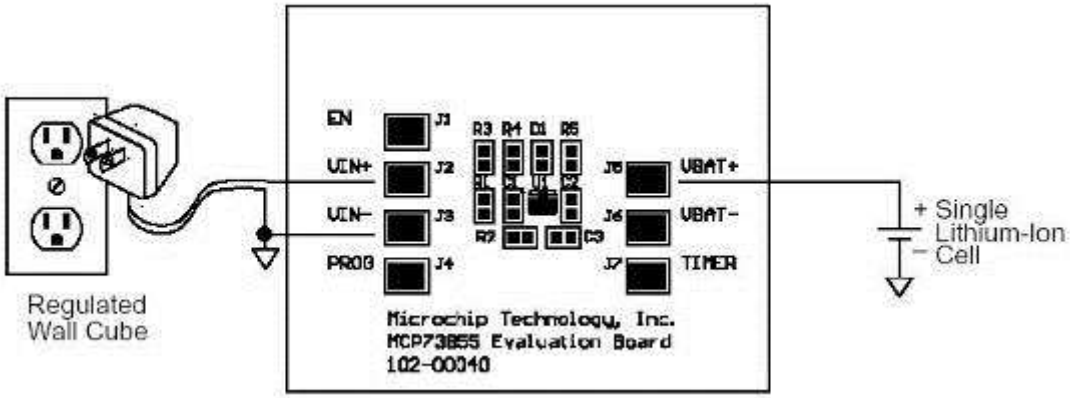

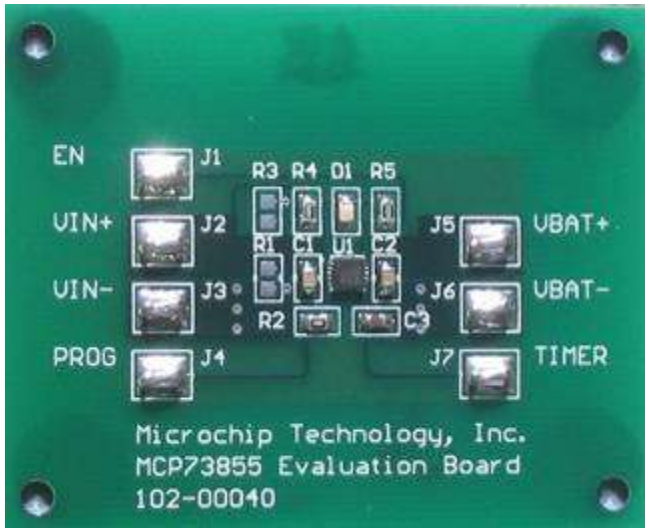

<< BACK

P/N: MCP73855EV

MCP7382x Eval Board

Online Info

The MCP7382X Evaluation Board is an evaluation and demonstration tool for Microchip Technology's MCP7382X Single Cell Li-Ion Charge Management Controllers. The design provides for dynamic versatility while being able to handle accurate measurements.
The MCP7382X Evaluation Board allows for the evaluation of the MCP7382X device in a variety of applications.

Products supported

- MCP7382x

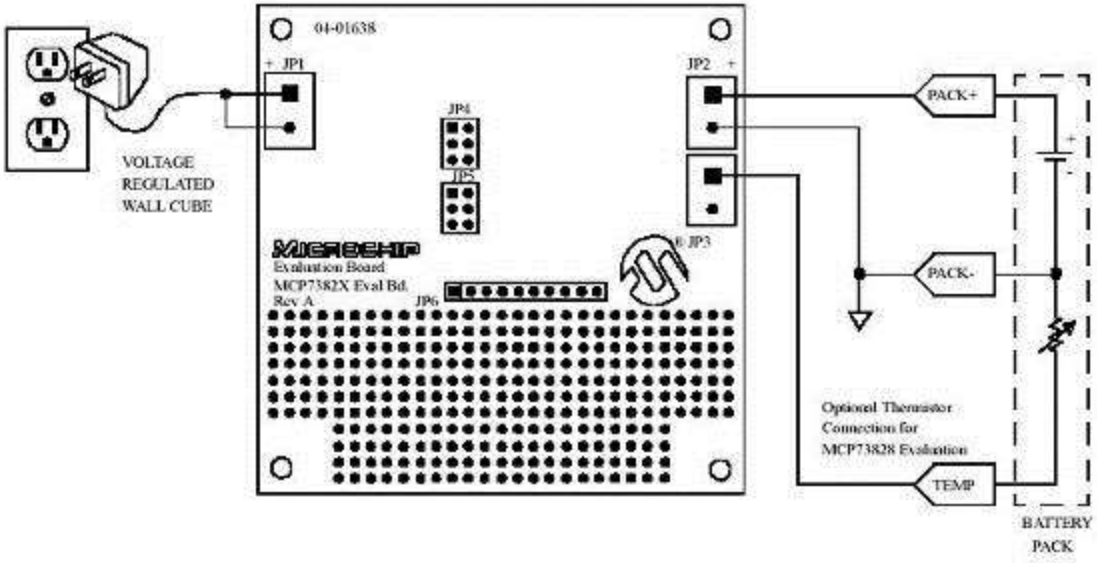

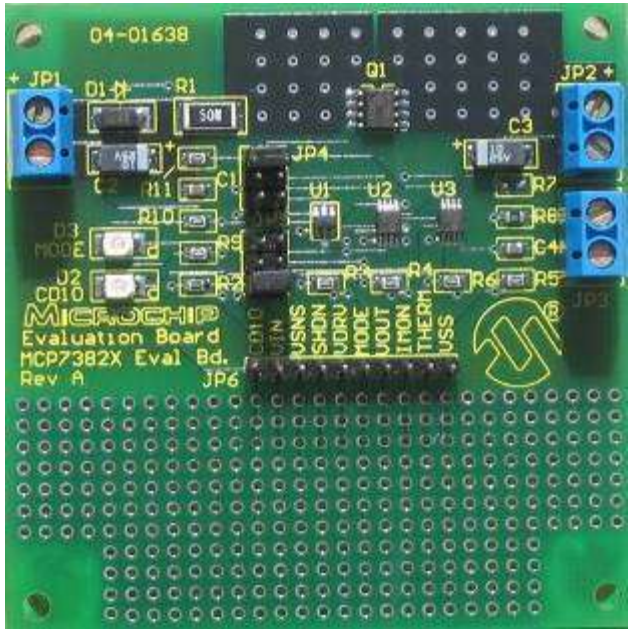

<< BACK

P/N: MCP7382XEV

MCP7381x Eval Board

Online Info

The MCP7381X Li-Ion Battery Charger Evaluation Board demonstrates the features and abilities for Microchip's MCP7381X Li-Ion Battery Charger Evaluation Board Simple, Miniature Single-Cell, Fully Integrated Li-Ion / Li-Polymer Charge Management Controllers. The MCP73811/2 are stand-alone highly integrated linear Li-Ion battery chargers that employ a constant current/constant voltage (CCCV) charge algorithm for cost sensitive and space limited applications.

Products supported

- MCP73811
- MCP73812

<< BACK

P/N: MCP7381XEV

MCP73113 OVP Single Cell Li-Ion Battery Charger Eval Bd

Online Info

The MCP73113 OVP Single-Cell Li-Ion Battery Charger Evaluation Board demonstrates the features of Microchip's MCP73113 "Single-Cell Li-Ion / Li-Polymer Battery Charge Management Controller with Input Overvoltage Protection".

Products supported

- MCP73113
- MCP73114

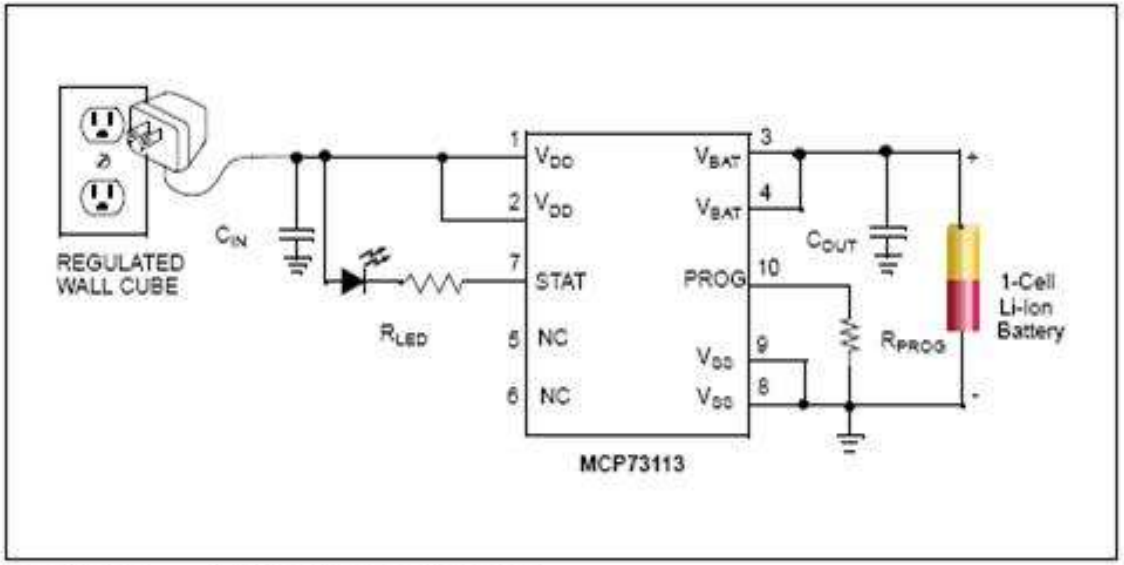

FIGURE 1-1: MCP73113 Typical Application.

<< BACK

P/N: MCP73113EV-1SOVP

MCP73213 OVP Dual Cell Li-Ion Battery Charger Eval Bd

Online Info

The MCP73213 OVP Dual-Cell Li-Ion Battery Charger Evaluation Board demonstrates the features of Microchip's MCP73213 "Dual-Cell Li-Ion / Li-Polymer Battery Charge Management Controller with Input Overvoltage Protection".

Products supported

- MCP73213

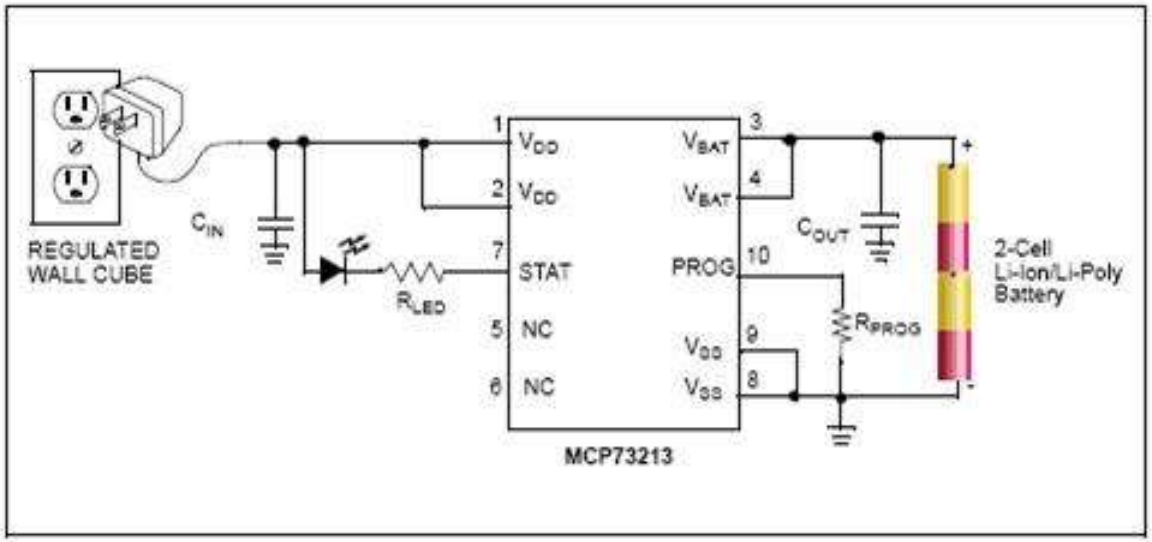

FIGURE 1-1: MCP73213 Typical Application.

<< BACK

P/N: MCP73213EV-2SOVP

MCP73X23 LiFePO$_4$ Battery Charger Eval Board

Online Info

The MCP73123/223 is a highly integrated Li-Ion battery charge management controller for use in space-limited and cost-sensitive applications.
The MCP73123/223 provides specific charge algorithms for Lithium Iron Phosphate batteries to achieve optimal capacity and safety in the shortest charging time possible. Along with its small physical size, the low number of external components makes the MCP73123/223 ideally suitable for low-cost and small-capacity (less than 2000 mAh) LiFePO$_4$ battery applications. It will take longer time to complete a charge cycle for larger capacity LiFePO$_4$ battery packs.

Products supported

- MCP73123
- MCP73223

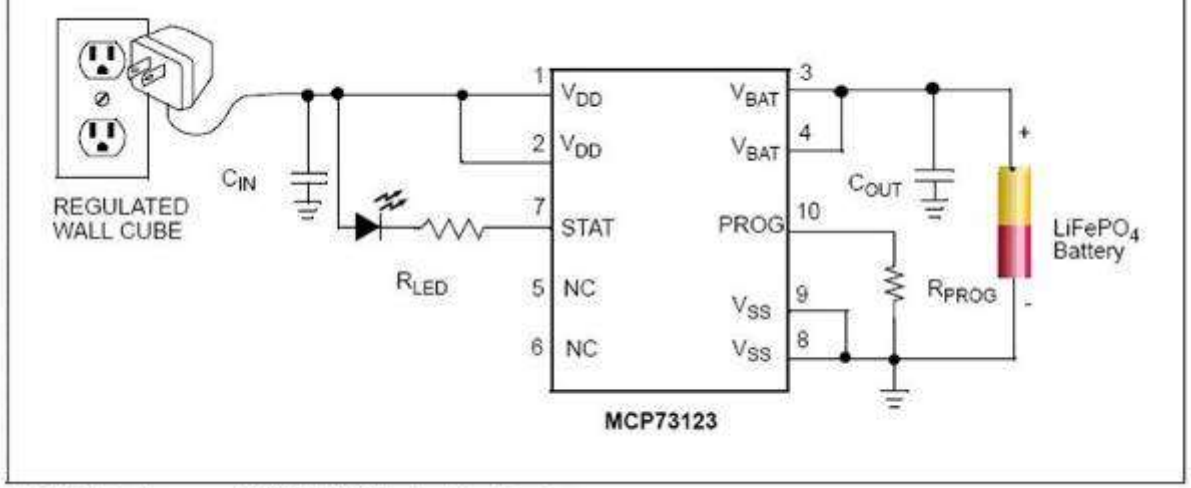

FIGURE 1-1: MCP73123 Typical Application.

<< BACK

P/N: MCP73X23EV-LFP

MCP73871x Eval Board

Online Info

The MCP73871 Evaluation Board is designed to demonstrate Microchip's stand-alone linear Li-Ion battery charger with system power path and load sharing management control solution. The system load is also supported by the Li-Ion battery when input power is disconnected. A number of device options allow the MCP73871 device to be utilized in a variety of applications.

Products supported

- MCP73871

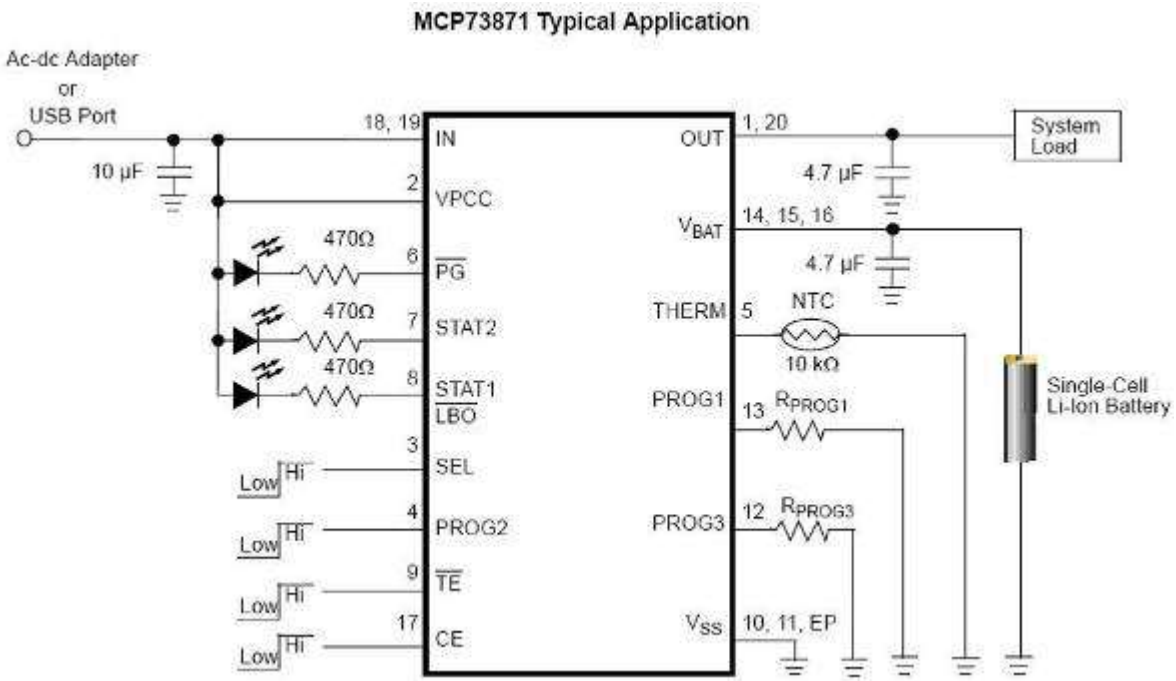

<< BACK

P/N: MCP73871EV

MCP7383X Li-Ion Power Path Management Design

Online Info

This reference design is developed to assist product designers in reducing product design cycle and time by utilizing Microchip's favorite stand-alone Li-Ion battery charge management controllers with system power path management.

Features:

- Load sharing system power path management that support charging single cell Li-Ion battery and system load at the same time without affecting charging algorithm of Microchip's stand-alone charge management controllers.
- The system load is supported by Li-Ion battery when input power source is removed
- Blue LED indicates charge status
- Additional Red LED to indicate Power-Good (PG) and Green LED to indicate charge complete (Available from MCP73833)
- Dip Switch to select programmable fast charge current between 1000mA (H) and 50mA (L) for MCP73833 and 400mA (H) and 25mA (L) for MCP73832
- Available THERM pin on the MCP73833 for temperature monitoring with a thermistor. It is disabled by default and can be enabled to use with NTC thermistor

Products supported

- MCP73831
- MCP73832
- MCP73833
- MCP73834

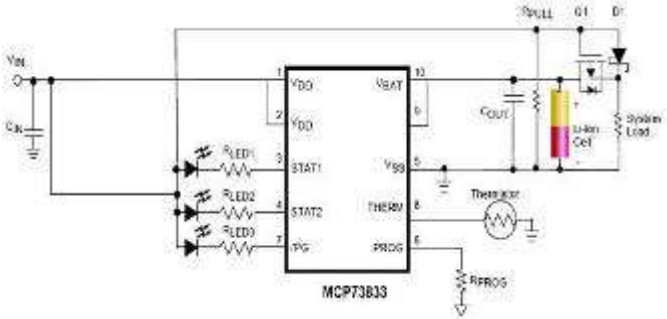

<< BACK

P/N: MCP7383XRD-PPM

MCP73871 Demo with Voltage Prop. Current Control

Online Info

The MCP73871 Demo Board with Voltage Proportional Current Control is designed to demonstrate Microchip's stand-alone linear Li-Ion battery charger with system power path and load sharing management control solution. The
MCP73871 integrates the required elements to meet design challenges when developing new Li-Ion / Li-Polymer batteries powered products.

The MCP73871 Demo Board with Voltage Proportional Current Control is designed to deliver minimum 1.5A total current to system load and to a single cell Li-Ion battery at 4.2V preset voltage regulation (4.1V, 4.35V and 4.4V options are also available for MCP73871). The board has a dip switch helping to decides the input power source between AC-DC wall adapter and USB port (AC/USB) and control input current limits, enable charge timer and enable charging.

The MCP73871 Demo Board with Voltage Proportional Current Control comes with a factory preset low-battery indicator (LBO) when input is absent. The preset value is 3.2V and STAT1 LED (green) with turn ON if the battery voltage is below the threshold voltage.

Products supported

- MCP73871

<< BACK

P/N: MCP73871DM-VPCC

MCP73837/8 AC/USB Dual Input Battery Charger Board

Online Info

The MCP73837/8 AC/USB Dual Input Battery Charger Evaluation Board demonstrates Microchip's stand-alone Linear Li-Ion Battery Chargers - MCP73837 and MCP73838.
The MCP73837/8 require only minimum components to implement a complete battery charge management circuit. The MCP73837/8 are designed to select AC-Adapter or USB-Port Power Source automatically where AC-Adapter provides the charge current when both sources are present.

Products supported

- MCP73837
- MCP73838

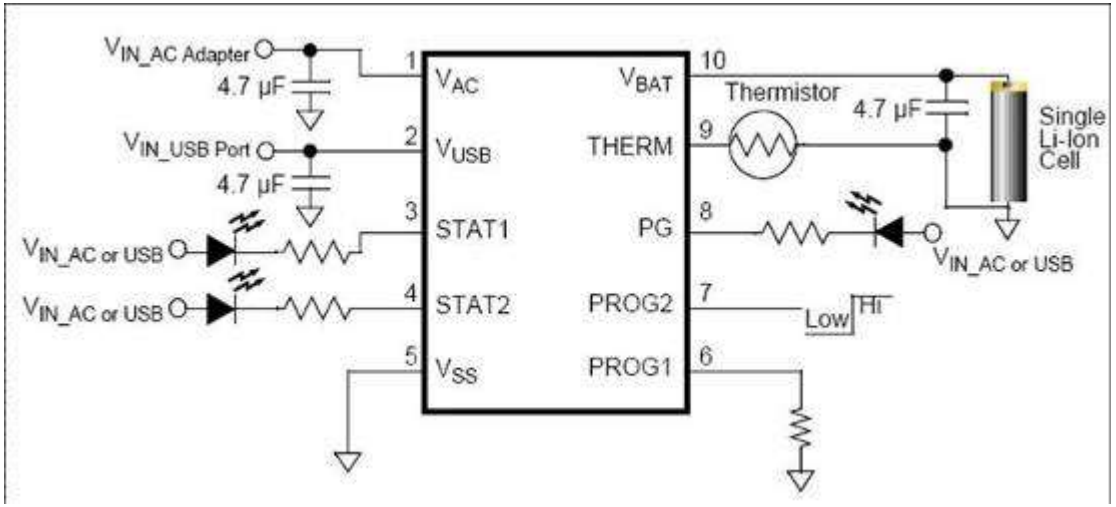

<< BACK

P/N: MCP7383XEV-DIBC

MCP3421 Weight Scale Demo Board

Online Info

The MCP3421 Weight Scale Demo Board is designed to evaluate the performance of the low-power consumption, 18-bit ADC in an electronic weight scale design. Next to the MCP3421 there is a low-noise, auto-zero MCP6V07 op amp. This can be used to investigate the impact of extra gain added before the ADC for performance improvement. The PIC18F4550 is controlling the LCD and the USB communication with the PC. The GUI is used to indicate the performance parameters of the design and for calibration of the weight scale.

Products supported

- MCP3421
- MCP6V07

<< BACK

P/N: MCP3421DM-WS

MCP3421 Evaluation Board

Online Info

The MCP3421 Evaluation Board assists in the evaluation of the MCP3421 device in a simple way.. The evaluation board contains minimum components: MCP3421, two bypass capacitors, and two loading resistors for the I²C™ bus.

Products supported

- MCP3421

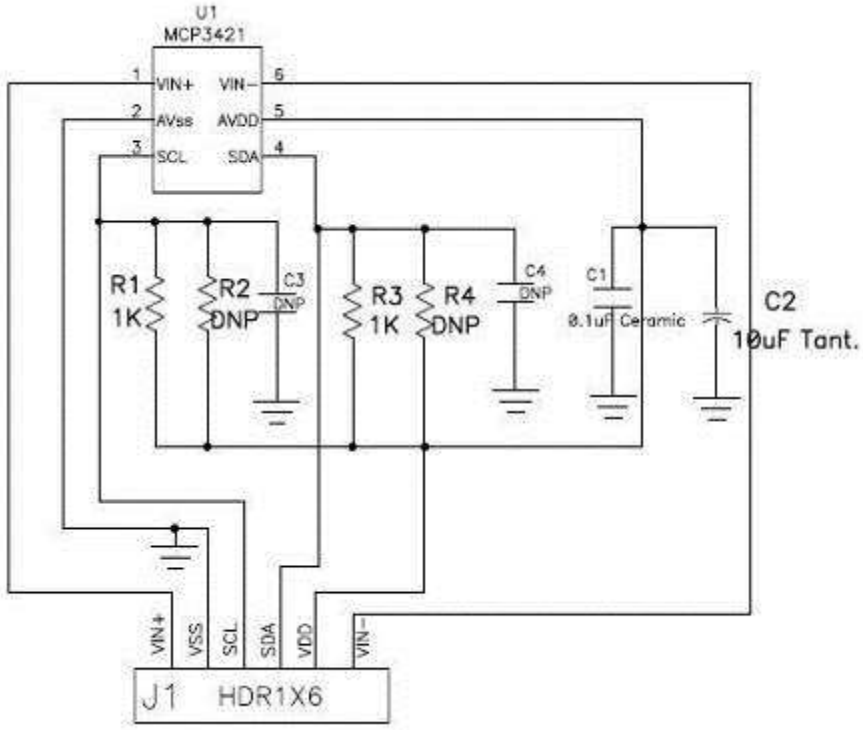

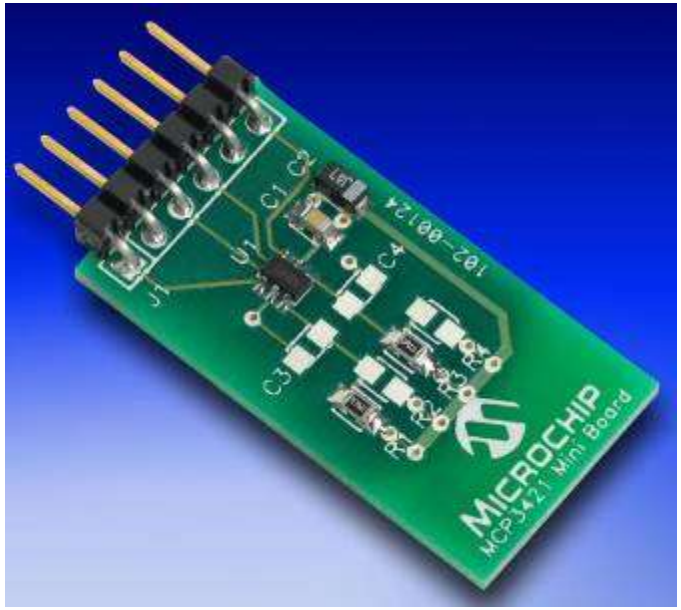

<< BACK

P/N: MCP3421EV

MCP3421 Battery Fuel Gauge Demo Board

Online Info

The MCP3421 Battery Fuel Gauge Demo Board demonstrates how to measure the battery voltage and discharging current using the MCP3421.

The MCU algorithm calculates the battery fuel being used. This demo board is shipped with 1.5V AAA non-rechargeable battery. The demo board displays the following parameters:
(a) Measured battery voltage.
(b) Measured battery discharging current.
(c) Battery Fuel Used (calculated).

The MCP3421 Battery Fuel Gauge Demo Board also can charge a single-cell 4.2V Li-Ion battery. This feature, however, is disabled by firmware since the demo kit is shipped to customer with non-rechargeable 1.5V AAA battery.

Please contact Microchip Technology Inc if you want to use the battery rechargeable feature.

Products supported

- MCP3421
- MCP73831
- MCP1702
- PIC18F4550

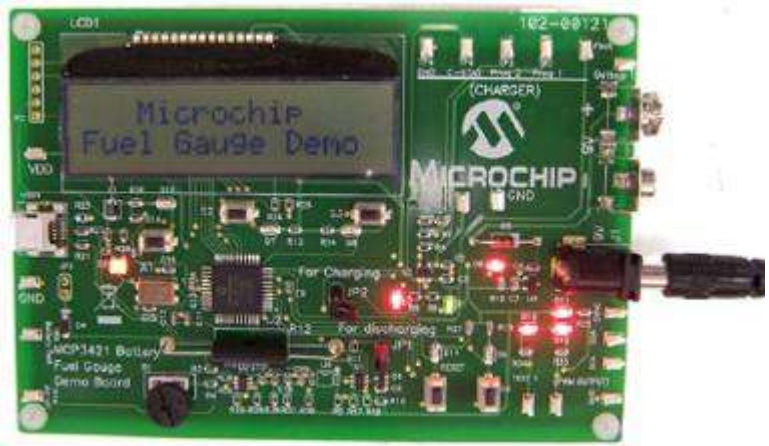

<< BACK

P/N: MCP3421DM-BFG

MCP342x Evaluation Boards

Online Info

The MCP342x Evaluation Boards enable the easy evaluation of the MCP3422/3/4/5 Delta-Sigma Analog-to-Digital Converters (ADCs). Each board has analog input connection pads and various test pads. The user can connect inputs and test the conversion results using the PICkit™ Serial Analyzer and its PC graphic user interface (GUI).

Features:

- Evaluate the MCP342x using the PICKit Serial Analyzer
- The user can write the MCP342x configuration register and read output codes by using the PICKit Serial Analyzer
- The sensor signal can be connected to the input pads of the board I^2C™ communication signal (SCL and SDA) can be monitored at the SCL and SDA pins on the board
- Evaluate the MCP342x performance using by simply connecting the SCL and SDA pins to the user's PC board

Products supported

- MCP3422
- MCP3423
- MCP3424
- MCP3425

<< BACK

P/N: MCP3422EV, MCP3423EV, MCP3424EV, MCP3425EV

MCP3551 PICtail™ Demo Board

Online Info

The MCP3551 PICtail™ Demo Board allows the system designer to evaluate the operation of the MCP3551 22-Bit Delta-Sigma ADC. The baud demonstrates the MCP3551 performance in a low-noise environment.

Products supported

- MCP3551
- PIC18F4550

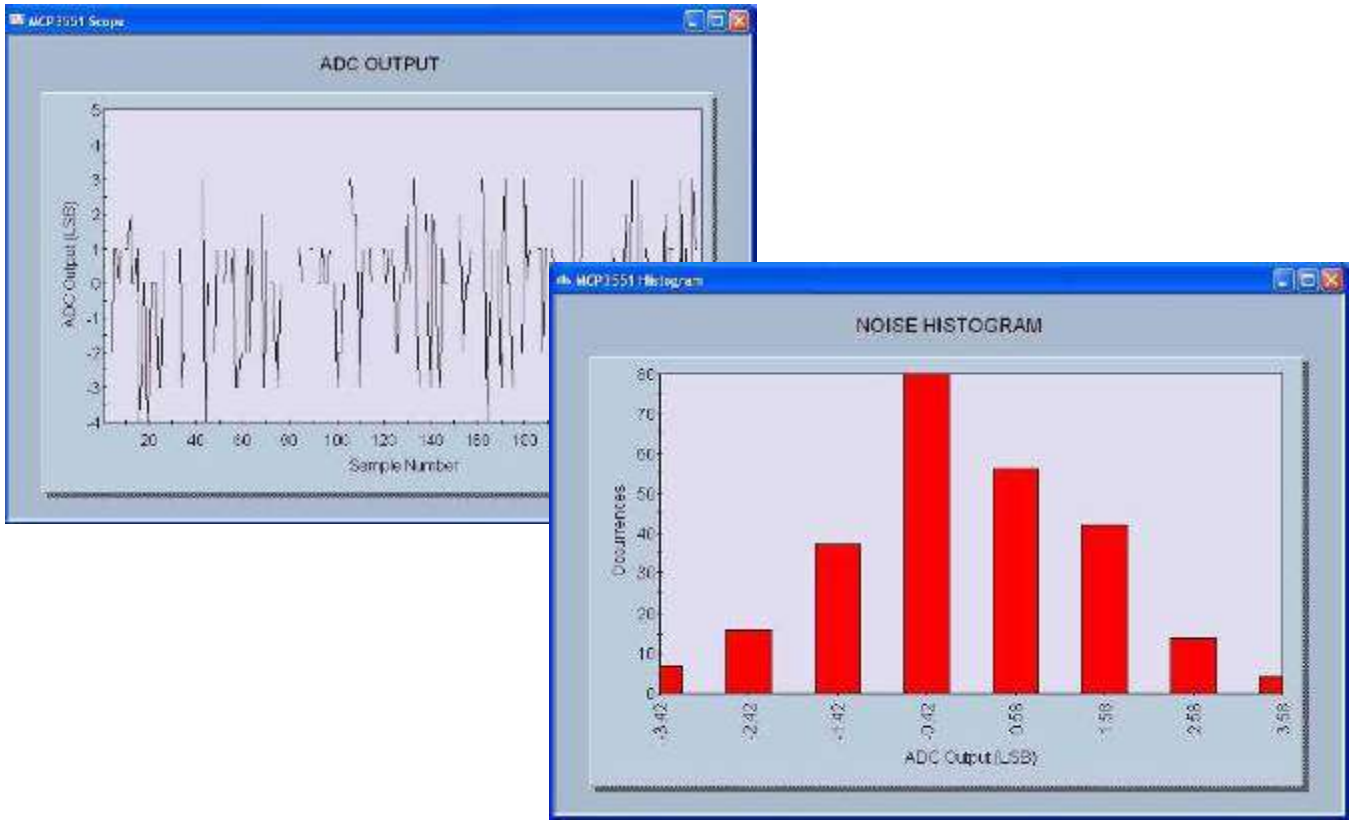

<< BACK

P/N: MCP3551DM-PCTL

MCP355X Tiny Application Sensor Demo Board

Online Info

The MCP3550/1/3 devices are 2.7V to 5.5V low-power, 22-bit Delta-Sigma ADCs. The MCP355x Tiny Application Sensor Demo Board is used to demonstrate the most basic application of the devices using a ratiometric connection with V_{DD} as V_{REF}. The board includes all the necessary PCB circuits and layout tips required to obtain the performance demonstrated on the PC.

Products supported

- MCP3550
- MCP3551
- MCP3553
- PIC18F4550

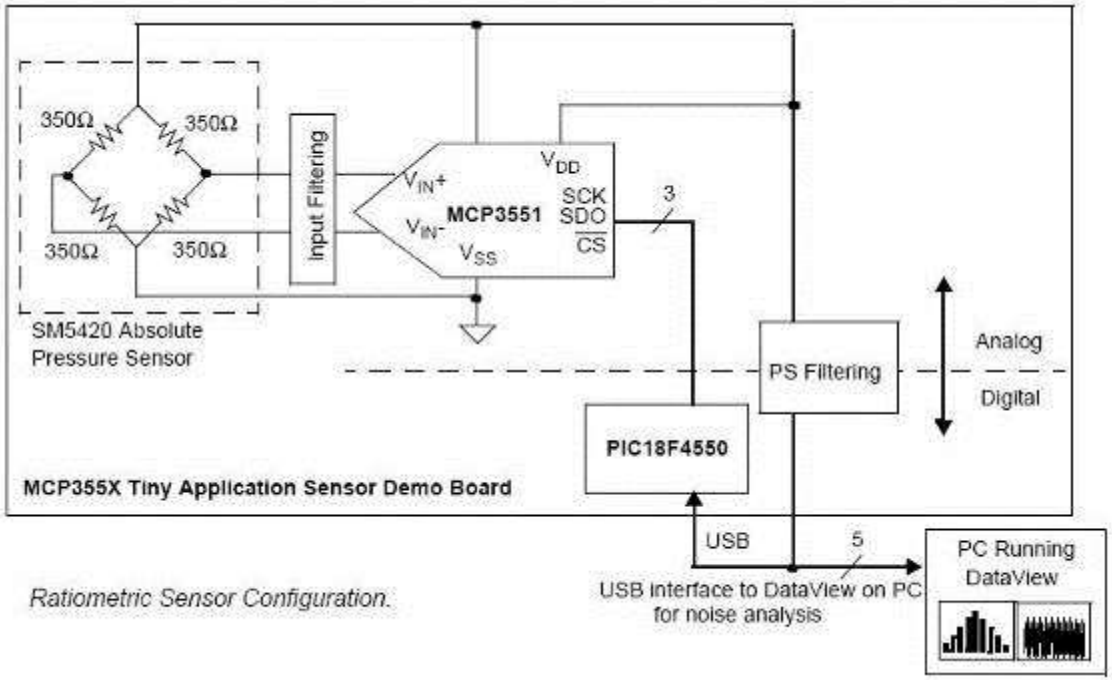

Ratiometric Sensor Configuration.

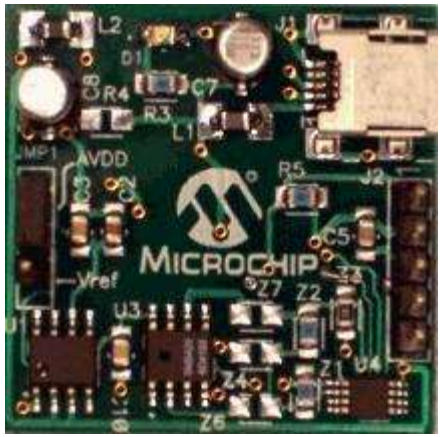

<< BACK

P/N: MCP355XDM-TAS

MCP355X Sensor Application Dev Board

Online Info

The MCP355X Sensor Application Developer's Board allows for the easy system design of high resolution systems such as weigh scale, temperature sensing, or other small signal systems requiring precise signal conditioning circuits. The reference design includes firmware that performs all the necessary functions including ADC sampling, USB communication for PC data analysis, LCD display output, zero cancellation, full scale calibration, and units display in gram (g), kilogram (kg), or ADC output units.

Products supported

- MCP3550
- MCP3551
- MCP3553
- MCP617
- PIC18F4550
- PIC16F877

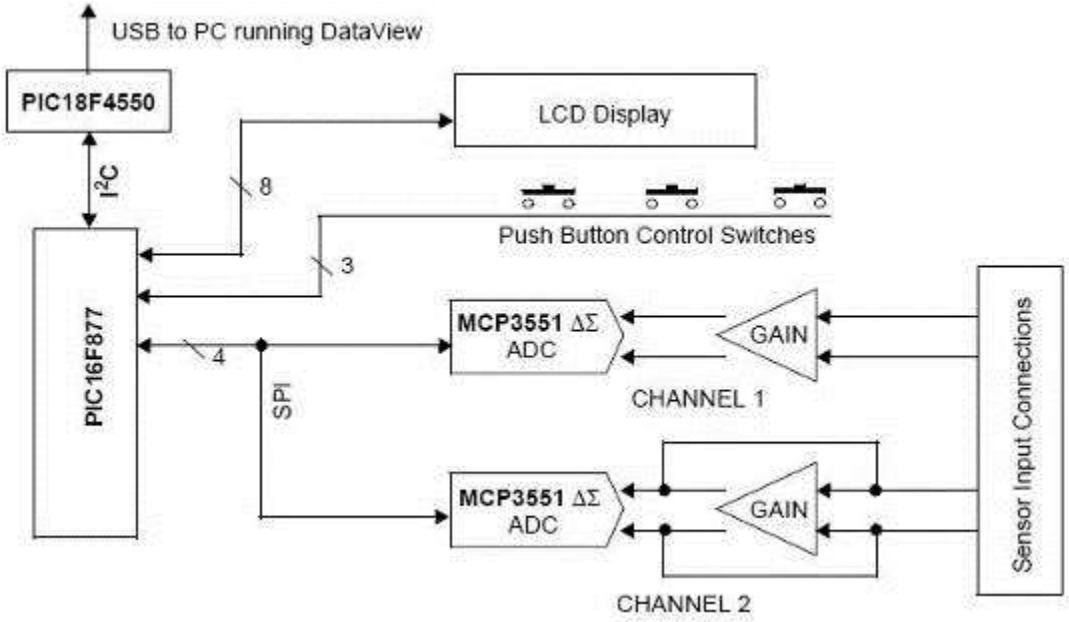

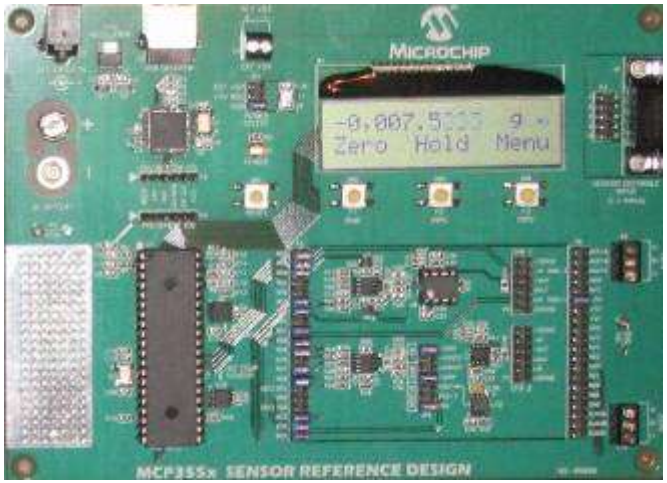

<< BACK

P/N: MCP355XDM-MS1

MCP3221 PICtail™ Demo Board

Online Info

The MCP3221 device is a low-power, 12-bit A/D Converter (ADC) in a SOT-23 package. It communicates via an I²C™ interface. A stand-alone demonstration is possible using a USB port and the DataView™ software. The MCP3221 Pictail™ Demo Board is also used to evaluate and demonstrate the MCP3221 device using the PICkit™ 1 Flash Starter Kit.

Products supported

- MCP3221
- PIC16C745

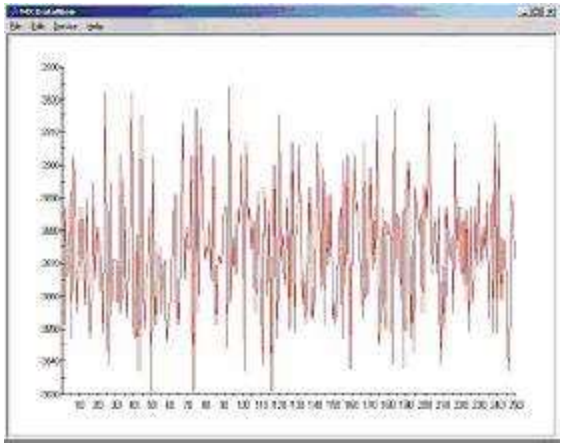

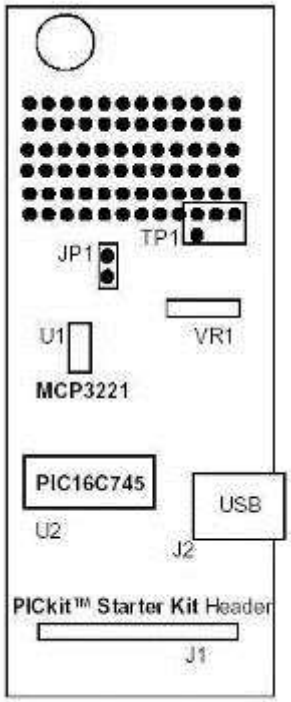

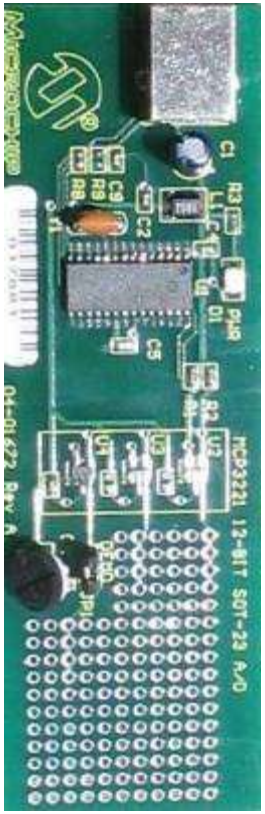

<< BACK

P/N: MCP3221DM-PCTL

ATM90E32AS Poly-Phase Reference Design

NDA Needed

Features:

• Based on SAM4LC4C/SAML22 MCU and ATM90E32AS Poly-Phase Energy Metering AFE
• On-board AC-DC converter with wide AC input range: 85V to 500V
• Exceeds class 0.2s accuracy over wide current range of 1(100)A
• Four independent LEDs for pulse outputs of active energy (CF1), reactive/apparent energy (CF2), fundamental energy (CF3) and harmonic energy respectively (CF4).
• Four isolated metering pulse outputs connectors.
• Two buttons for scrolling LCD display menu or waking up MCU
• One isolated RS485 com port, one IrDA com port
• One serial EEPROM for meter data storage or event recording
• Standard JTAG port for programming and debugging.
• Includes ATSHA204 Atmel Crypto Authentication device to demonstrate hardware anti-cloning and secure key storage features (for M90E32AS-RD)
• Temperature compensated high accuracy RTC.
• Compliant with CT or Rogowski coil sensors.
• Battery-backed with power fail detection.
• Real-time event recording
• NDA required

Products supported

- ATM90E32AS
- SAM4LC4C
- SAML22

<< BACK

P/N: M90E32AS-RD (SAM4L+ATM90E32AS)
M90R2232A-RD (SAML22+ATM90E32AS)

ATM90E36A Poly-Phase Reference Design

NDA Needed

Features:

• Based on SAM4LC4C/SAML22 MCU and ATMM90E36A Poly-Phase Energy Metering AFE
• On-board AC-DC converter with wide AC input range: 85V to 500V
• Exceeds class 0.2s accuracy over wide metering span of 1(100)A, .
• 6-channel (voltage and current) fundamental and up to 32nd order of harmonic component analysis
• Dedicated 7th ADC channel for neutral line current.
• Four independent LEDs for pulse outputs of active energy(CF1), reactive/apparent energy (CF2), fundamental energy (CF3) and harmonic energy respectively (CF4).
• Four isolated metering pulse outputs connectors.
• Two buttons for scrolling LCD display menu or waking up MCU
• One isolated RS485 com port, one IrDA com port.
• One serial EEPROM for meter data storage or event recording
• Standard JTAG port for programming and debugging.
• Includes ATSHA204 Atmel Crypto Authentication device to demonstrate hardware anti-cloning and secure key storage features. (for M90E36A-RD).
•Temperature compensated high accuracy RTC
• Compliant with CT or Rogowski coil sensors
• Battery-backed with power fail detection
• NDA required

P/N: M90E36A-RD (SAM4LC4C+M90E36A)
M90R2236A-RD (SAML22+M90E36A)

Products supported

- ATM90E36A
- SAM4LC4C
- SAML22

<< BACK

MCP3905A Reference Design

Online Info

The MCP3905A/06A device is an energy metering IC that supplies average active power information via a pulse output with direct drive for mechanical counters. It also includes a higher-frequency output that supplies instantaneous power information for calibration. The device contains function blocks specific for IEC energy meter compliance, such as a no-load threshold and startup current.
The MCP3905A/06A Energy Meter Reference Design Printed Circuit Board (PCB) is used as a reference design for single-phase, residential meters.

Products supported

- MCP3905A
- MCP3906A

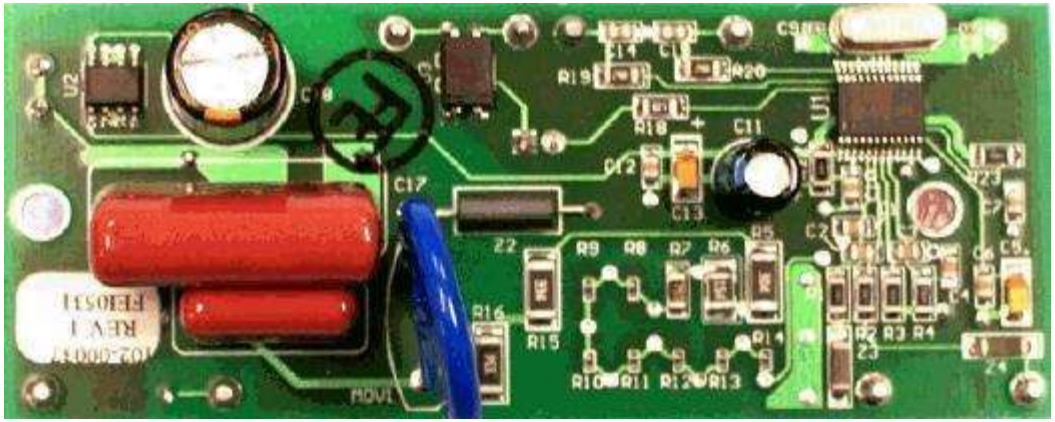

<< BACK

P/N: MCP3905RD-PM1

MCP3901 Eval Board for 16-bit MCUs

Online Info

The MCP3901 ADC Evaluation Board for 16-Bit MCUs system provides the ability to evaluate the performance of the MCP3901 dual channel ADC. It also provides a development platform for 16-bit PIC based applications, using existing 100-pin PIM systems

Products supported

- MCP3901
- PIC24F
- PIC24H
- dsPIC33
- PIC18F86J55

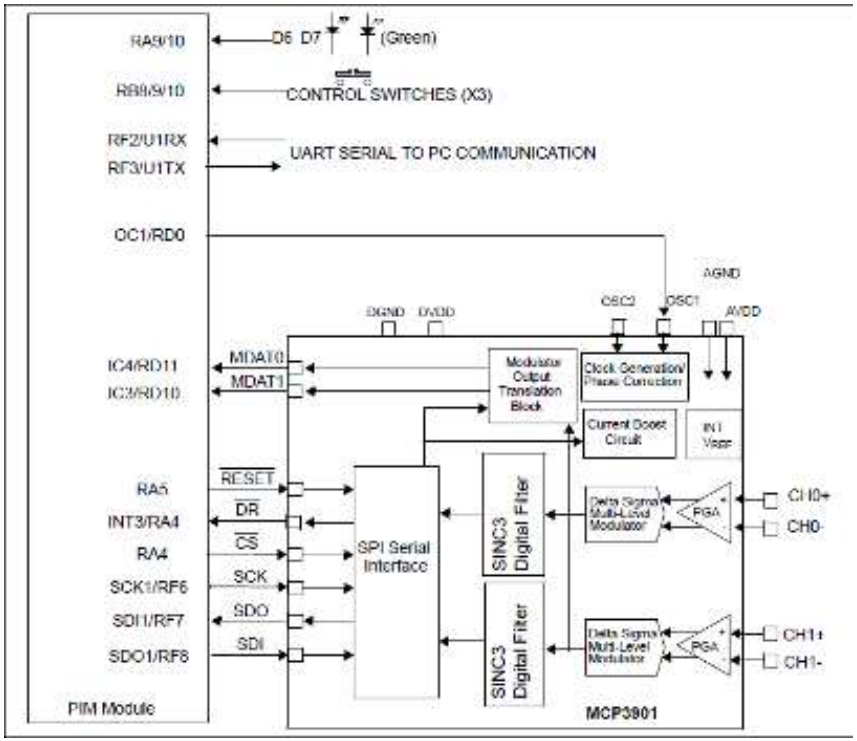

<< BACK

P/N: MCP3901EV-MCU16

MCP3910 Eval Board for 16-bit MCUs

Online Info

The MCP3910 ADC Evaluation Board for 16-Bit MCUs provides the opportunity to evaluate the performance of the MCP3910 dual-channel ADCs in a multiple device, isolated system. It comes with four MCP3910s, three of which are isolated and operate in 2-wire Serial Interface Mode. It also provides a development platform for 16-bit PIC® microcontroller-based applications, using existing 100-pin PIM systems, compatible with the Explorer 16 and other high pin count PIC device demo boards. The system comes with programmed PIC24FJ256GA110 PIM modules that communicate with the PC software for viewing data samples sent from the board.

Features:

• Four MCP3910 devices for complete 3-phase isolated and neutral system evaluation
• Selectable Phase A, B, C, or N (neutral) MCP3910 dual channel output display on the PC Software Interface
• Simultaneous 55 ksps at 95 dB SINAD performance on any MCP3910 channel
• Single-phase MCP3910 performance analysis through graphical PC tools showing Noise Histogram, Frequency Domain (FFT), Time domain scope plot, and statistical numerical analysis
• PICtail® Plus connectors for Explorer 16 daughter board compatibility

Products supported

- MCP3911
- PIC24F
- dsPIC33

<< BACK

P/N: ADM00425

MCP3911 Eval Board for 16-bit MCUs

Online Info

The MCP3911 ADC Evaluation Board for 16-Bit MCUs system provides the ability to evaluate the performance of the MCP3911 dual-channel ADC. It also provides a development platform for 16-bit PIC-based applications, using existing 100-pin PIM systems compatible with the Explorer-16 and other high pin count PIC demo boards. The system comes with a programmed PIC24FJ256GA110 PIM module that communicates with the included PC software for data exchange and ADC configuration.

Products supported

- MCP3911
- PIC24F
- dsPIC33

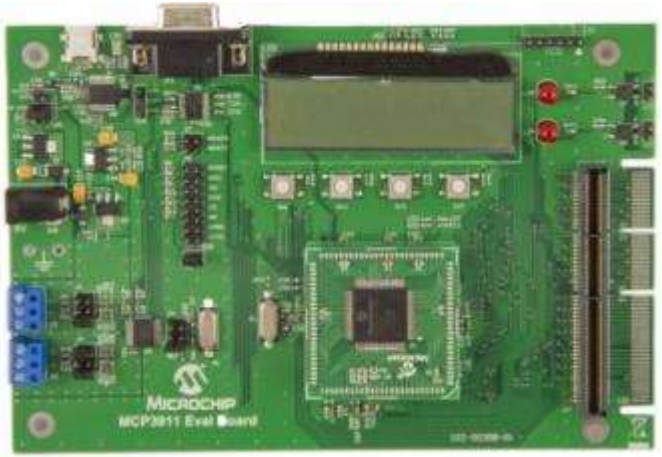

Features:

• Dual ADC MCP3911 output display using serial communication to PC software (Energy Management Utility)
• Simultaneous 55 ksps at 95 dB SINAD performance
• System and ADC performance analysis through graphical PC tools showing Noise Histogram, Frequency Domain (FFT), Time domain scope plot, and statistical numerical analysis
• PICtail Plus connectors for Explorer-16 daughter board compatibility

<< BACK

P/N: ADM00398

MCP3919 Eval Board for 16-bit MCUs

Online Info

The MCP3919 ADC Evaluation Board for 16-Bit MCUs system provides the opportunity to evaluate the performance of the MCP3919 three-channel AFE. It also provides a development platform for 16-bit PIC® based applications, using existing 100-pin PIC microcontroller Plug-in Module (PIM) systems that are compatible with the Explorer 16 and other high pin count PIC® based demo boards. The system comes with a programmed PIC24FJ256GA110 PIM module that communicates with the Energy Management Utility software.

Features:

• Three-Channel ADC MCP3919 output display using serial communication to PC software

• Simultaneous 57 ksps at OSR32 address loop ALL or 95 dB SINAD at OSR512 performance on MCP3919

• System and ADC performance analysis showing Noise Histogram, Frequency Domain (FFT), Time domain scope plot, and statistical numerical analysis

• PICtail Plus connectors for Explorer-16 daughter board compatibility

P/N: ADM00573

Products supported

- MCP3919
- PIC24F
- dsPIC33

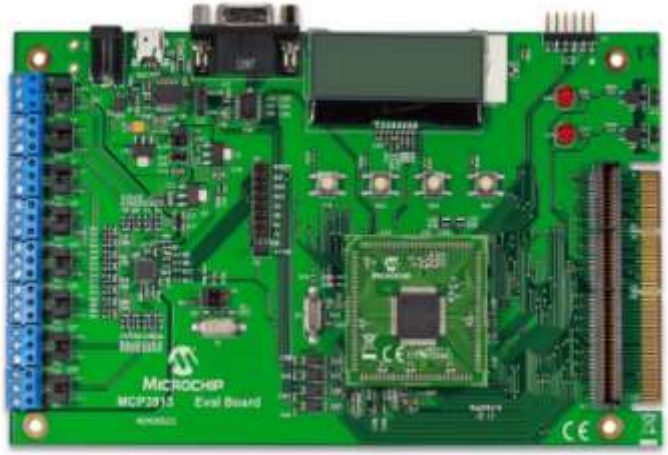

<< BACK

MCP3912 Eval Board for 16-bit MCUs

Online Info

The MCP3912 ADC Evaluation Board for 16-Bit MCUs system provides the opportunity to evaluate the performance of the MCP3912 four-channel AFE. It also provides a development platform for 16-bit PIC® based applications, using existing 100-pin PIC microcontroller Plug-in Module (PIM) systems that are compatible with the Explorer 16 and other high pin count PIC® based demo boards. The system comes with a programmed PIC24FJ256GA110 PIM module that communicates with the Energy Management Utility software.

Features:

• Four-Channel ADC MCP3912 output display using serial communication to PC software
• Simultaneous 57 ksps at OSR32 address loop ALL or 95 dB SINAD at OSR512 performance on MCP3912
• System and ADC performance analysis showing Noise Histogram, Frequency Domain (FFT), Time domain scope plot, and statistical numerical analysis
• PICtail Plus connectors for Explorer-16 daughter board compatibility

P/N: ADM00499

Products supported

- MCP3912
- PIC24F
- dsPIC33

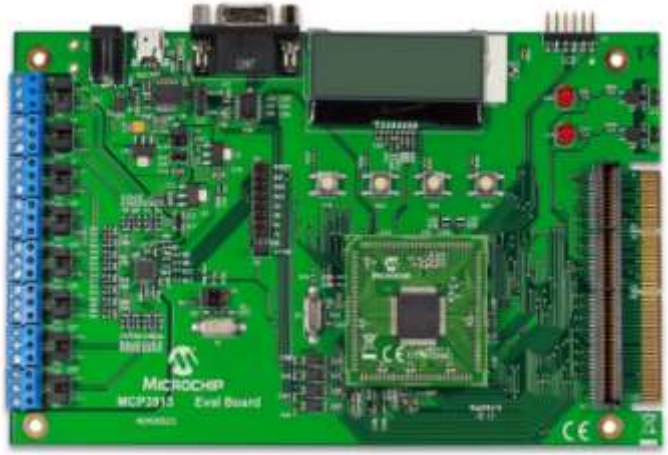

<< BACK

MCP3913 Eval Board for 16-bit MCUs

Online Info

The MCP3913 ADC Evaluation Board for 16-Bit MCUs system provides the opportunity to evaluate the performance of the MCP3913 six-channel AFE. It also provides a development platform for 16-bit PIC® based applications, using existing 100-pin PIC microcontroller Plug-in Module (PIM) systems that are compatible with the Explorer 16 and other high pin count PIC® based demo boards. The system comes with a programmed PIC24FJ256GA110 PIM module that communicates with the Energy Management Utility software.

Features:

• Six-Channel ADC MCP3913 output display using serial communication to PC software

• Simultaneous 57 ksps at OSR32 address loop ALL or 95 dB SINAD at OSR512 performance on MCP3913

• System and ADC performance analysis showing Noise Histogram, Frequency Domain (FFT), Time domain scope plot, and statistical numerical analysis

• PICtail Plus connectors for Explorer-16 daughter board compatibility

P/N: ADM00522

Products supported

- MCP3913
- PIC24F
- dsPIC33

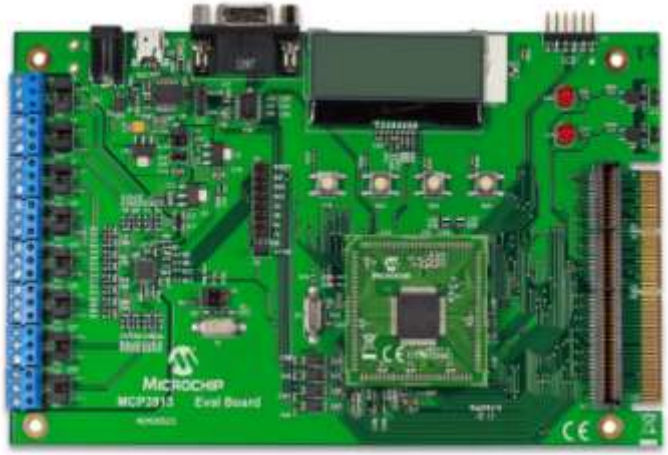

<< BACK

MCP3914 Eval Board for 16-bit MCUs

Online Info

The MCP3914 ADC Evaluation Board for 16-Bit MCUs system provides the opportunity to evaluate the performance of the MCP3914 eight-channel AFE. It also provides a development platform for 16-bit PIC® based applications, using existing 100-pin PIC microcontroller Plug-in Module (PIM) systems that are compatible with the Explorer 16 and other high pin count PIC® based demo boards. The system comes with a programmed PIC24FJ256GA110 PIM module that communicates with the Energy Management Utility software.

Features:

• Eight-Channel ADC MCP3914 output display using serial communication to PC software

• Simultaneous 57 ksps at OSR32 address loop ALL or 95 dB SINAD at OSR512 performance on MCP3914

• System and ADC performance analysis showing Noise Histogram, Frequency Domain (FFT), Time domain scope plot, and statistical numerical analysis

• PICtail Plus connectors for Explorer-16 daughter board compatibility

P/N: ADM00523

Products supported

- MCP3914
- PIC24F
- dsPIC33

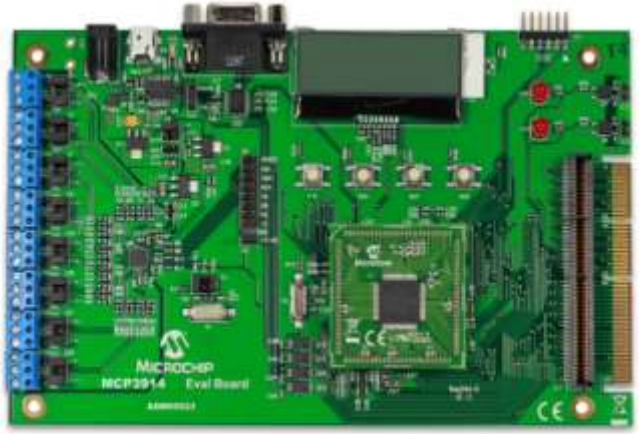

<< BACK

MCP3903 Eval Board for 16-bit MCUs

Online Info

The MCP3903 ADC Evaluation Board for 16-bit MCU system provides the ability to evaluate the performance of the MCP3903 six channel sigma-delta ADC. It also provides a development platform for 16-bit PIC-based applications, using existing 100-pin PIM systems.

Products supported

- MCP3903
- PIC24F
- PIC24H
- dsPIC33

Features:

• MCP390x DataVIEW PC software interface for communicating and controlling the MCP3903 Evaluation board through the virtual COM port created by the on-board MCP2200

• System and ADC performance analysis through graphical PC tools showing noise histogram, frequency domain (FFT), time domain scope plot, and statistical numerical analysis

• Robust hardware design with analog grounding and analog/digital separation, allowing low noise evaluation of the MCP3903 device.

• Separate power supplies and power planes - 4 layer board

• PICtail Plus connectors for Explorer-16 daughter board compatibility

<< BACK

P/N: ADM00310

ATM90EXX Demo Boards

NDA Needed

ATM90E26 Single-Phase Energy Metering AFE :

- Supports resistive Shunt or Current Transformer (CT)
- Energy pulses
  - Active energy pulse indicator and isolated output
  - Reactive energy pulse indicator and isolated output
- One communication connector
- 8.192MHz Crystal
- External 3.3V input

ATM90E32AS & ATM90E36A Poly-phase Metering AFE :

- Supports Current Transformer (CT) or Rogowski Coil
- Isolated Energy pulse outputs for Active, Reactive, Apparent, Fundamental and Harmonic Energy
- 16.384MHz Crystal
- 100-240VAC or 9VDC input power

Products supported

- ATM90E26
- ATM90E32AS
- ATM90E36A

P/N: ATM90E2x-DB

ATM90E32AS-DB

ATM90E36A-DB

<< BACK

ATSAM4CMX 1-Phase & Poly-Phase Meter Demo

NDA Needed

Support for ATSAM4CMS & ATSAM4CMP:

- Connectors for customer current sensors
- Voltage dividers on-board
- LCD (Custom Atmel), Buttons
- Atmel ATSHA204 Crypto Memory
- Atmel AT30TS75 Temp. Sensor
- Metrology LEDs (Wh, …)
- ANSI or IEC base fitting
- Adesto AT25DF321A
- Supercap backup supply
- PLC connectors
- JTAG debug port
- RF/Zigbee Connectors
- Flyback Supply
- Opto ports
- Metrology Library
- Application Firmware

Products supported

- ATMSAM4CMS
- ATMSAM4CMP

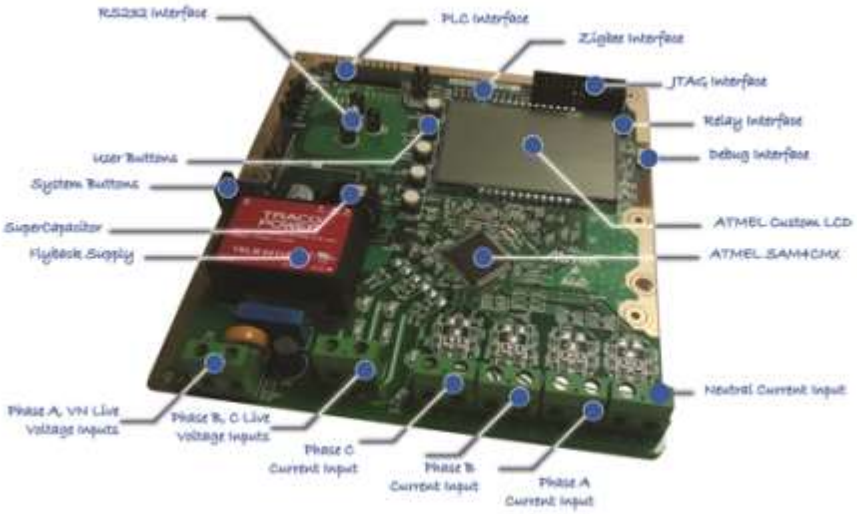

P/N: Single Phase: ATSAM4CMS-DB (1MB flash device), **ATSAM4CMS32-DB** (2MB flash device)

Poly-Phase: ATSAM4CMP-DB (1MB flash device), **ATSAM4CMP32-DB** (2MB flash device**)**

<< BACK

MCP39F501 Demo Board

Online Info

The MCP39F501 Power Monitor Demonstration Board is a fully functional single-phase power monitor. This low-cost design does not use any transformers and requires few external components. The device calculates typical power quantities as defined in the MCP39F501 data sheet. The MCP39F501 Power Monitor Utility software is used to calibrate and monitor the system, and can be used to create custom calibration setups. For some accuracy requirements, only a single point calibration may be needed.

Features:

- Displays Active, Reactive and Apparent Power, RMS Current, RMS Voltage, Line Frequency, Power Factor and Temperature using PC software
- Event notifications, such as Over Current, Over Power, Over/Under Frequency, Over/Under Temperature, and Voltage Sag/Surge
- Device configuration through PC software, including Event Notifications, Gain Calibration, EEPROM, Calculation Multipliers, and I/O settings
- 120V and 220V operation

P/N: ARD00455

Products supported

- MCP39F501

<< BACK

MCP39F501 Power Monitor PICTail™ Board

Online Info

The MCP39F501 Power Monitor PICtail™ Evaluation Board duals as a fully functional single-phase power monitor and development platform. This low-cost design does not use any transformers and requires few external components. The device calculates active power, reactive power, RMS current, RMS voltage, power factor, line frequency and other typical power quantities as defined in the MCP39F501 data sheet. The MCP39F501 Power Monitor Utility software is used to calibrate and monitor the system and can be used to create custom calibration setups. For some accuracy requirements only a single point calibration may be needed.

Features:

• PICtail board allows development with Microchip's 16-bit and 32-bit microcontrollers using the Explorer 16 Development Board (DM240001)

• PC software displays power quantities, event notifications and allows device configuration

Products supported

- MCP39F501
- PIC® MCUs

<< BACK

P/N: ADM00509

MCP39F511 Demo Board

Online Info

The MCP39F511 Power Monitor Demonstration Board is a fully functional single-phase power and energy monitoring system. The system calculates and displays active power, reactive power, RMS current, RMS voltage, active energy (both import and export), and four quadrant reactive energy.

It connects by USB to the “MCP39F511 Power Monitor Utility Software” that offers control to allow you to easily experiment with all system configuration settings such as PWM output frequencies, zero crossing detection options, and event configurations, among many others.

Features:

• Displays Active, Reactive, Apparent Power, RMS Current, RMS Voltage, Line Frequency, Import/Export Active Energy and 4 Quadrant Reactive Energy

• Event notifications including Over Current, Over Power, Voltage Sag and Voltage Surge

• Device configuration through PC software

• Direct connect to 90V-240VAC operation

•15A maximum recommended load

Products supported

- MCP39F511

<< BACK

P/N: ADM00667

MCP39F521 Demo Board

Online Info

The MCP39F521 Power Monitor Demonstration Board is a fully functional I^2C bus single-phase power and energy monitoring system. The system calculates and displays active power, reactive power, RMS current, RMS voltage, active energy (both import and export), and four quadrant reactive energy.
It connects through USB to the “Power Monitor Utility Software” that offers automated control to allow you to easily experiment with all system configuration settings such as zero crossing detection options and event configurations.

Features:

- Displays Active, Reactive, Apparent Power, RMS Current, RMS Voltage, Line Frequency, Import/Export Active Energy and 4 Quadrant Reactive Energy
- Event notifications including Over Current, Over Power, Voltage Sag and Voltage Surge
- Device configuration through PC software
- Direct connect to 90V-240VAC operation
- 15A maximum recommended load

Products supported

- MCP39F521

<< BACK

P/N: ADM00686

MCP39F511N Demo Board

Online Info

The MCP39F511N Power Monitor Demonstration Board is a fully functional dual channel single-phase power and energy monitoring system. The system calculates and displays active power, reactive power, RMS current, RMS voltage, active energy (both import and export), and four quadrant reactive energy), on 2 independent channels, simultaneously.
It connects through USB to the “Power Monitor Utility Software” that offers automated control to allow you to easily experiment with all system configuration settings such as PWM output frequencies, zero crossing detection options, and event configurations, among many others.

Features:

- Dual channel display of Active, Reactive, Apparent Power, RMS Current, RMS Voltage, Line Frequency, Import/Export Active Energy and 4 Quadrant Reactive Energy
- Event notifications including Over Current, Over Power, Voltage Sag and Voltage Surge
- Device configuration through PC software
- Direct connect to 90V-240VAC operation
- 15A maximum recommended load

P/N: ADM00706

Products supported

- MCP39F11N

<< BACK

MCP3911 PIC18F85K90 Anti-Tamper Meter

Online Info

The MCP3911 and PIC18F85K90 Single-Phase Anti-Tamper Energy Meter is a fully functional single-phase meter with enhanced capabilities, such as battery backup, RTC and anti-tamper features. The two current channels are measured with the MCP3911 device and the voltage channel is measured with the 12-bit SAR ADC integrated in the microcontroller. This design has two sensors for the current measurements: a current transformer and a shunt. The PIC18F85K90 microcontroller directly drives the LCD and communicates via UART with the MCP2200, offering an isolated USB connection for meter calibration and access to the device power calculations. The system calculates active and reactive energy, active, reactive and apparent power, power factor, RMS current, RMS voltage and the line frequency. The Microchip Energy Meter Software is used to calibrate and monitor the system.

Features:

- Rated 5(60)A 220V 3200 imp/kWh IEC62053-22 Class 0.5 Meter
- Calculates active and reactive energy, active, reactive and apparent power, power factor, RMS current, RMS voltage and the line frequency
- Anti-tamper monitoring including neutral monitoring, current circuit reversal, magnetic field disturbance and cover opening detection
- Microchip Energy Meter Software to calibrate and monitor the system
- Calibration can be done in closed loop or open loop

Products supported

- MCP3911
- PIC18F85K90

<< BACK

P/N: ARD00385

MCP6L2 PIC18F66J73

Online Info

The MCP6L2 and PIC18F66J93 Energy Meter is a fully functional single-phase meter that uses the 12-bit successive approximation analog-to-digital converter (SAR ADC) integrated in the microcontroller. This low-cost design has a shunt as the current sensor. The signal from the shunt is amplified by two external operational amplifiers and applied to the input of the ADC. The PIC18F66J93 directly drives the LCD and communicates via UART with the MCP2200, offering an isolated USB connection for meter calibration and access to the device power calculations. The system calculates active and reactive energy; active, reactive and apparent power; power factor; RMS current; RMS voltage, and line frequency.

The Microchip energy meter software is used to calibrate and monitor the system. The calibration can be done in closed loop or open loop. When connected to a stable source of voltage and current, the meter can do an auto-calibration by including the open loop calibration routine and formulas in the firmware.

Features:

- Energy meter software allows calibration and system monitoring
- Isolated USB connection
- Calculates active and reactive energy, active and apparent power, power factor, RMS current, RMS voltage, and line frequency

Products supported

- MCP6L2
- PIC18F66J93

<< BACK

P/N: ARD00370

MCP4725 Eval Board

Online Info

The MCP4725 SOT-23-6 Evaluation Board is a quick and easy evaluation tool for the MCP4725 12-bit DAC device. It works with Microchip's popular PICkit™ Serial Analyzer or independently with the customer's applications board.

Connect the MCP4725 SOT-23-6 Evaluation Board to the PICkit™ Serial Analyzer and type in the DAC input data in the PICkit™ Serial Analyzer's PC Graphical User Interface program.

The PICkit™ Serial Analyzer will then send the user's data to the DAC device automatically. The DAC's analog output will be available immediately at the output pin. The user will appreciate the simplicity of evaluating the DAC device using this kit.

The customer also can connect the MCP4725 SOT-23-6 Evaluation Board directly to their applications board and test out their systems functions immediately.

The MCP4725 SOT-23-6 Evaluation Board kit includes two of the Evaluation Boards. The PICkit™ Serial Analyzer is sold separately

Products supported

- MCP4725

<< BACK

P/N: MCP4725EV

MCP4725 PICtail™ Plus Daughter Board

Online Info

The MCP4725 PICtail™ Plus Daughter Board (P/N MCP4725DM-PTPLS) contains an MCP4725 12-bit Digital-to-Analog Converter (DAC). This daughter board has the following two interfaces:

- Explorer 16 Starter Kit (P/N: DV164033) for 16-bit MCU environment
- PICkit™ Serial Analyzer (P/N: DV164122) for reading and writing the DAC register and observing the DAC output

The user can connect this daughter board to one of the above tools and perform their own experiments.

Products supported

- MCP4725

<< BACK

P/N: MCP4725DM-PTPLS

MCP4726 PICtail™ Plus Daughter Board

Online Info

The MCP47X6 PICtail™ Plus Daughter Board allows customers to evaluate the capabilities of the MCP4726, MCP4716, and MCP4706 devices. This board can be controlled by the MCU of the Explorer 16 Development Board (P/N: DV164033) or by a PICkit™ Serial Analyzer. The board also provides easy access via test points to desired signals to monitor device operation. A buzzer is supplied that is connected to the output of the MCP4726, which allows generation of an audible sound. The buzzer has a volume control.

Products supported

- MCP4706
- MCP4716
- MCP4726

<< BACK

P/N: ADM00317

MCP4728 Eval Board

Online Info

The MCP4728 Evaluation Board is a tool for quick and easy evaluation of the MCP4728 4-channel 12-bit DAC device. It contains the MCP4728 device and connection pins for the Microchip's popular PICkit™ Serial Analyzer. Simply connect the MCP4728 Evaluation Board to the PICkit™ Serial Analyzer and type in the DAC input data in the PICkit™ Serial Analyzer's PC Graphical User Interface program. The PICkit™ Serial Analyzer will then send the user's data to the DAC device automatically. The new DAC's analog outputs will be available immediately at the DAC output pins.

Products supported

- MCP4728

<< BACK

P/N: MCP4728EV

MCP401x/402x Eval Board

Online Info

The MCP402X Digital Potentiometer Evaluation Board (MCP402XEV) allows the system designer to quickly evaluate the operation of Microchip Technology's MCP401X/2X Digital Potentiometer products.

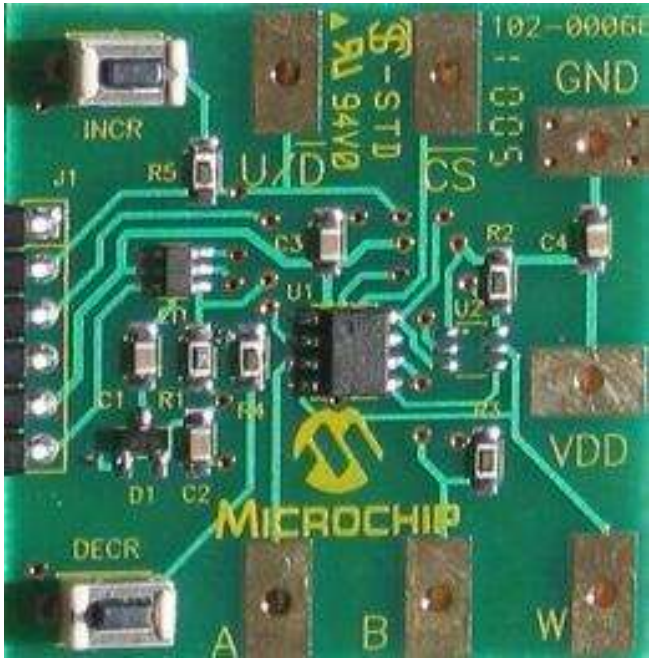

Products supported

- MCP4011
- MCP4012
- MCP4013
- MCP4014
- MCP4021
- MCP4022
- MCP4023
- MCP4024

<< BACK

P/N: MCP402XEV

MCP401X Eval Board

Online Info

The MCP401XEV Evaluation Board allows the system designer to quickly evaluate the operation of theMCP40D18 Digital Potentiometer device. The board uses the SC70EV Generic PCB and has been populated for the MCP40D18. The 6-pin header (PICkit Serial) has been jumpered to the MCP40D18's appropriate pins. This allows the PICkit Serial to communicate with the device.

Products supported

- MCP40D17
- MCP40D19
- MCP4017
- MCP4018
- MCP4019

<< BACK

P/N: MCP401XEV

MCP42XX Eval Board

Online Info

The MCP42XX Evaluation Board allows the system designer to quickly evaluate the operation of Microchip Technology's MCP4261 Digital Potentiometer device. The board uses the TSSOP20EV Generic PCB and has been populated for the MCP4261. The 6-pin header (PICkit Serial) has been jumpered to the MCP4261's appropriate pins. This allows the PICkit Serial to communicate with the device.

Products supported

- MCP4231
- MCP4241
- MCP4251
- MCP4261

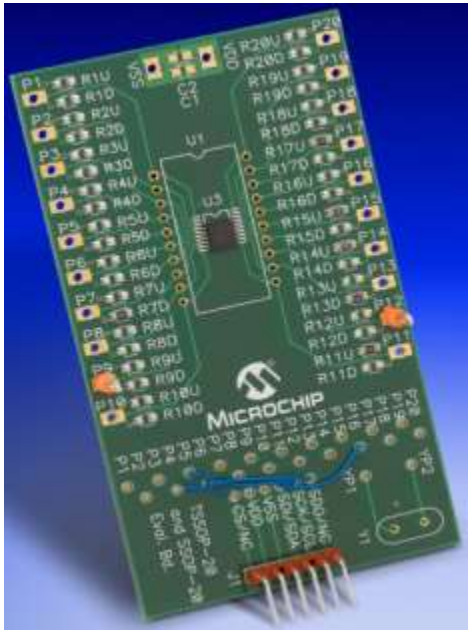

<< BACK

P/N: MCP42XXEV

MCP43XX Eval Board

Online Info

The MCP43XX Evaluation Board allows the system designer to quickly evaluate the operation of Microchip Technology's MCP4361 Digital Potentiometer device. The board uses the TSSOP20EV Generic PCB and has been populated for the MCP4361. The 6-pin header (PICkit Serial) has been jumpered to the MCP4361's appropriate pins. This allows the PICkit Serial to communicate with the device.

Products supported

- MCP4331
- MCP4341
- MCP4351
- MCP4361

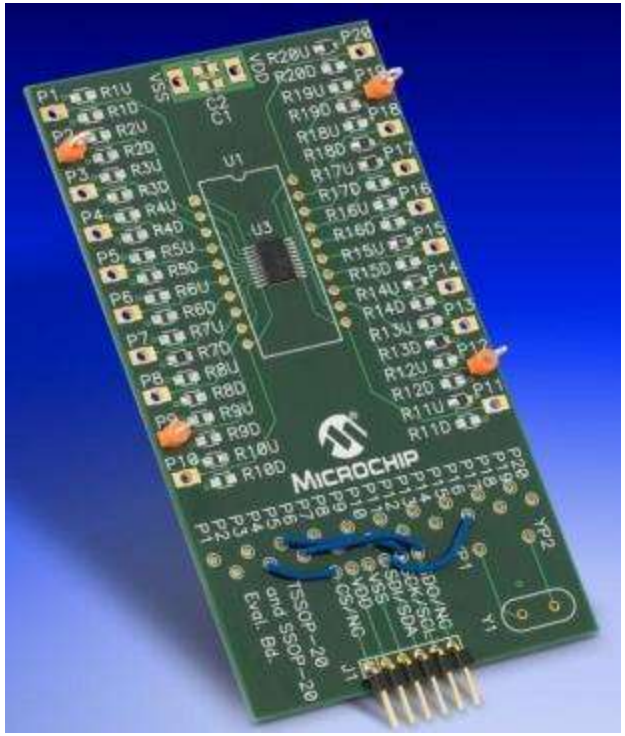

<< BACK

P/N: MCP43XXEV

MCP46XX Eval Board

Online Info

The MCP46XX Evaluation Board allows the system designer to quickly evaluate the operation of Microchip Technology's MCP4661 Digital Potentiometer device. The board uses the TSSOP20EV Generic PCB and has been populated for the MCP4661. The 6-pin header (PICkit Serial) has been jumpered to the MCP4661's appropriate pins. This allows the PICkit Serial to communicate with the device.

Products supported

- MCP4631
- MCP4641
- MCP4651
- MCP4661

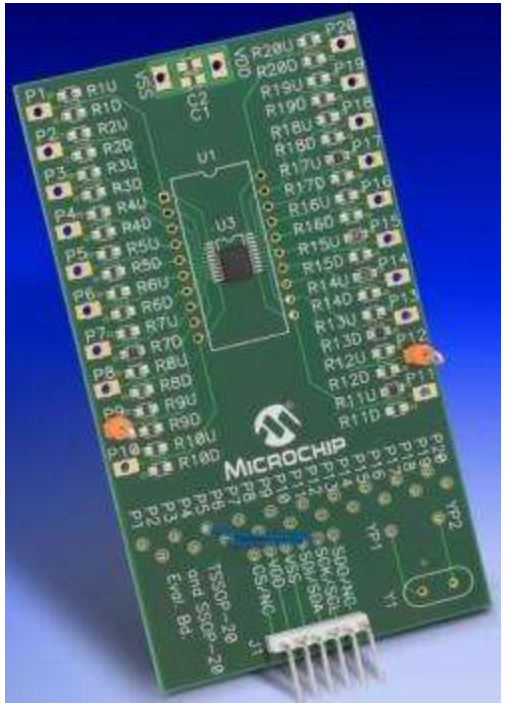

<< BACK

P/N: MCP46XXEV

MCP42XX PICtail™ Plus Daughter Board

Online Info

The MCP42XX PICtail™ Plus Daughter Board is used to demonstrate the operation of the MCP42XX Digital Potentiometers. The operation of the MCP41XX devices is similar to the MCP42XX devices. Therefore, this demo board can be used as a development platform for either device family.

This board is designed to be used in conjunction with either the PIC24 Explorer 16 Demo Board or the PICkit™ Serial Analyzer.

Products supported

- MCP4231/2
- MCP4241/2
- MCP4251/2
- MCP4261/2

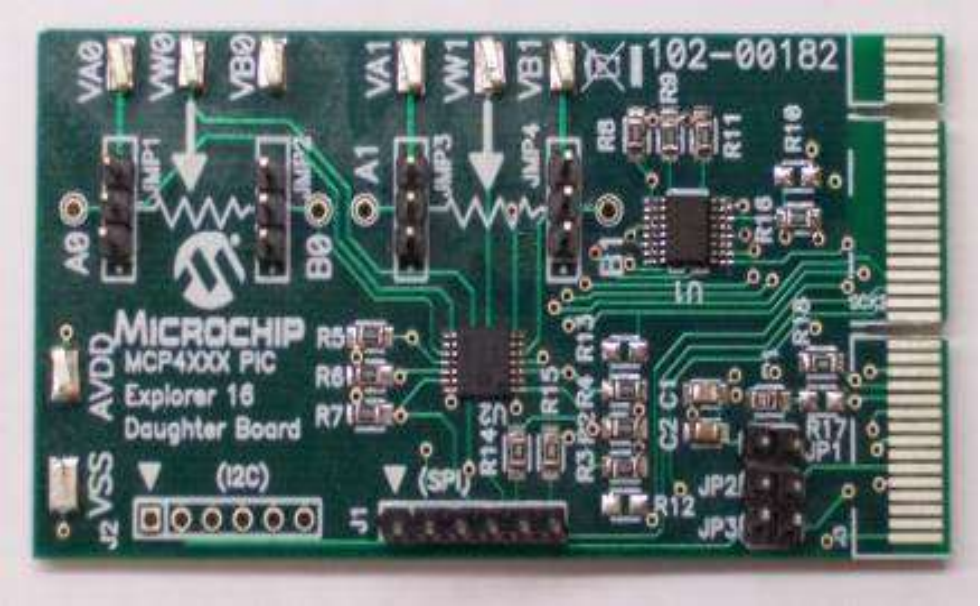

<< BACK

P/N: MCP42XXDM-PTPLS

Mixed Signal PICtail™ Demo Board

Online Info

The Mixed Signal PICtail™ Demo Board allows the system designer to quickly evaluate the suitability of several Microchip analog products for their product's design. Microchip's Digital-to-Analog Converters (DACs), Analog-to-Digital Converters (ADCs), V_{REF}, Low Dropout Output (LDO) regulators and the PIC16F7X devices are supported. Evaluation precision analog products for specific applications can be challenging for practical reasons. First, many products are only available in surface-mount packages. Secondly, analog circuits tend to be affected adversely by system noise. Common bread boarding techniques are not practical for these reasons. The Mixed Signal PICtail™ Demo Board utilizes a 4-layer PCB with attention paid to reducing system noise.

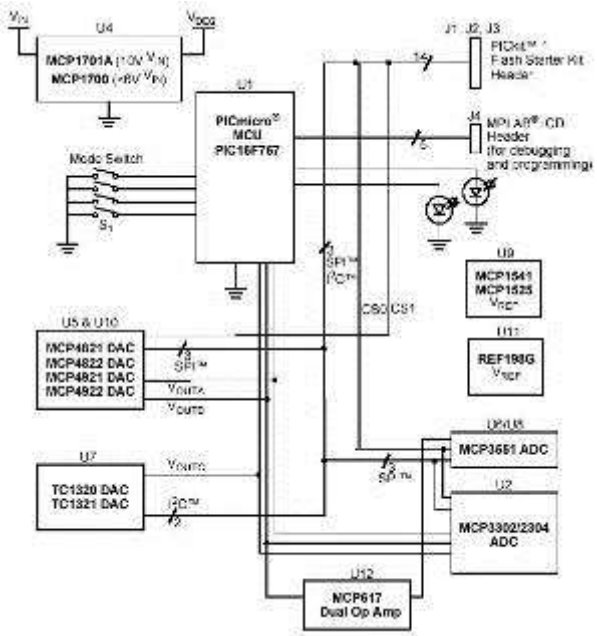

Products supported

- MCP3551
- MCP3302/04
- MCP482x
- MCP492x
- TC132x
- MCP617
- MCP15xx
- MCP1701A
- MCP1700
- PIC16F767

<< BACK

P/N: MXSIGDM

Mixed Signal PICtail™ Demo Board

Online Info

The Mixed Signal PICtail™ Demo Board allows the system designer to quickly evaluate the suitability of several Microchip analog products for their product's design. Microchip's Digital-to-Analog Converters (DACs), Analog-to-Digital Converters (ADCs), V_{REF}, Low Dropout Output (LDO) regulators and the PIC16F7X devices are supported. Evaluation precision analog products for specific applications can be challenging for practical reasons. First, many products are only available in surface-mount packages. Secondly, analog circuits tend to be affected adversely by system noise. Common bread boarding techniques are not practical for these reasons. The Mixed Signal PICtail™ Demo Board utilizes a 4-layer PCB with attention paid to reducing system noise.

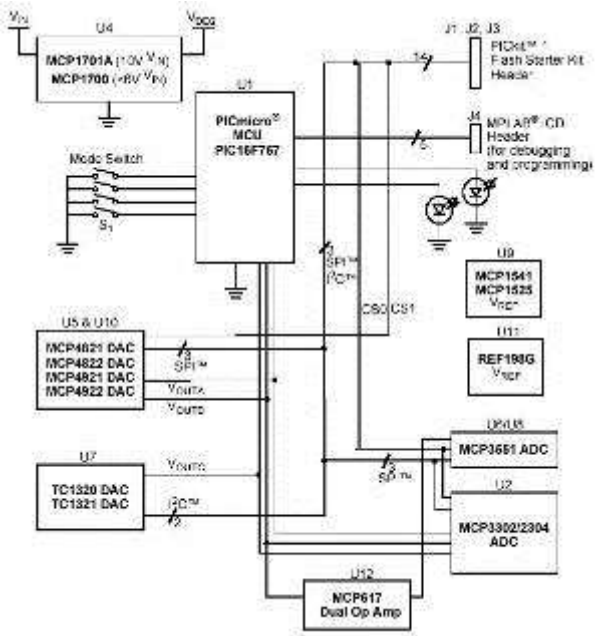

Products supported

- MCP3551
- MCP3302/04
- MCP482x
- MCP492x
- TC132x
- MCP617
- MCP15xx
- MCP1701A
- MCP1700
- PIC16F767

<< BACK

P/N: MXSIGDM

MCP2515/2510 CAN Developer's Kit

Online Info

The MCP2515 Development Kit is a two-node Controller Area Network (CAN) tool that can be used in the evaluation/implementation of the MCP2515 stand-alone CAN controller. The software allows manipulation of the MCP2515 at the bit and byte levels with one template, while providing high-level control with a second template.

- One node is controlled by the PC that acts as a microcontroller using the provided software. This node can be used for basic MCP2515 evaluation/development ("node 0")
- The second node is controlled by a microcontroller that is programmed by the user as part of device validation and/or system development

The two nodes are connected via CAN bus that is also routed off-board through a connector, allowing the target board to be connected to an external CAN bus ("node 1")

Products supported

- MCP2515
- MCP2510

<< BACK

P/N: DV251001

MCP2515 PICtail™ Demo Board

Online Info

The MCP2515 PICtail™ Demo Board allows the system designer to quickly evaluate the operation of the MCP2515 Stand-Alone CAN Controller. The board demonstrates the MCP2515 in a CAN bus environment.
In addition, the kit includes a MCP25020 CAN I/O Expander node which demonstrates the device on a CAN bus.

Products supported

- MCP2515
- MCP2551
- MCP25020
- PIC16F676

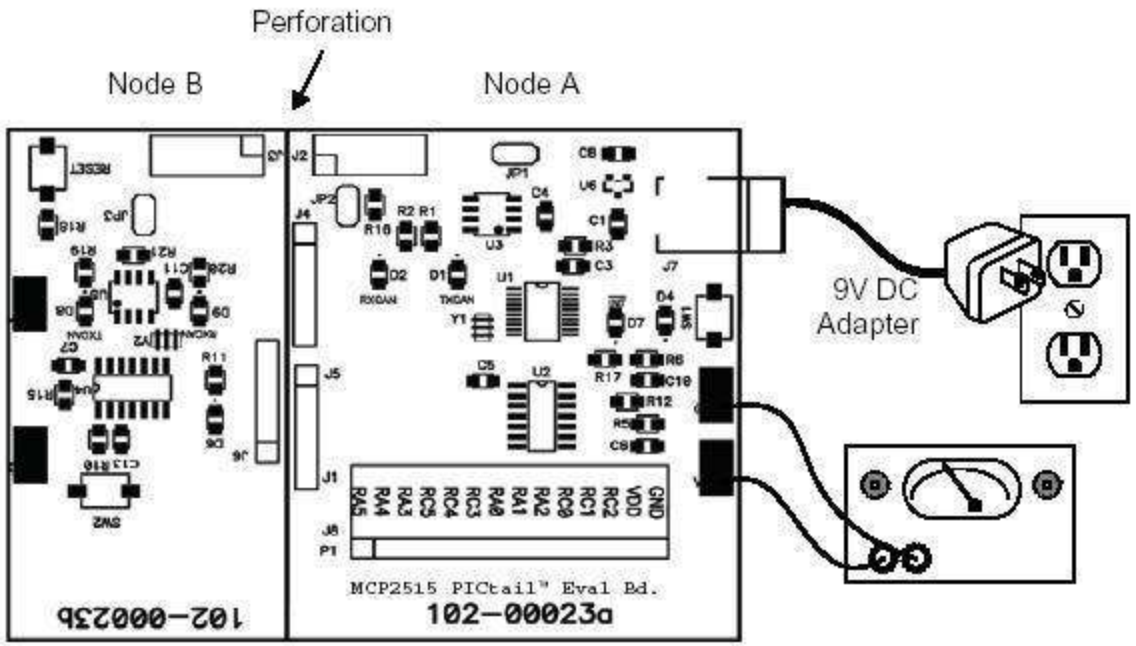

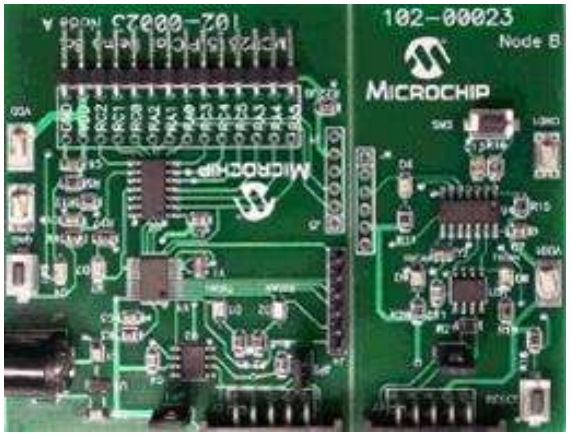

<< BACK

P/N: MCP2515DM-PCTL

MCP2515 PICtail™ Plus Daughter Demo Board

Online Info

The MCP2515 PICtail™ Plus Daughter Board is a simple Controller Area Network (CAN) board designed to be used with boards containing the PICtail Plus connector.

The board also has the PICkit™ Serial connector for interfacing to the PICkit Serial Analyzer tool. The CAN node consists of the MCP2515 Stand-Alone CAN controller and MCP2551 CAN transceiver.

The PICkit Plus and PICkit Serial connectors allow the board to be interfaced to a variety of PIC® micros so that the user can develop a CAN node. The board also contains headers or test points for most of the MCP2515 pins to allow the external functions to be monitored/evaluated.

Products supported

- MCP2515
- MCP2551

<< BACK

P/N: MCP2515DM-PTPLS

MCP2515 CAN Bus Monitor Demo Board

Online Info

The MCP2515 CAN Bus Monitor Demo Board kit contains two identical boards which can be connected together to create a simple two node Controller Area Network (CAN) bus, which can be controlled and/or monitored via the included PC interface. The board(s) can also be connected to an existing CAN bus.

Products supported

- MCP2515
- MCP2551

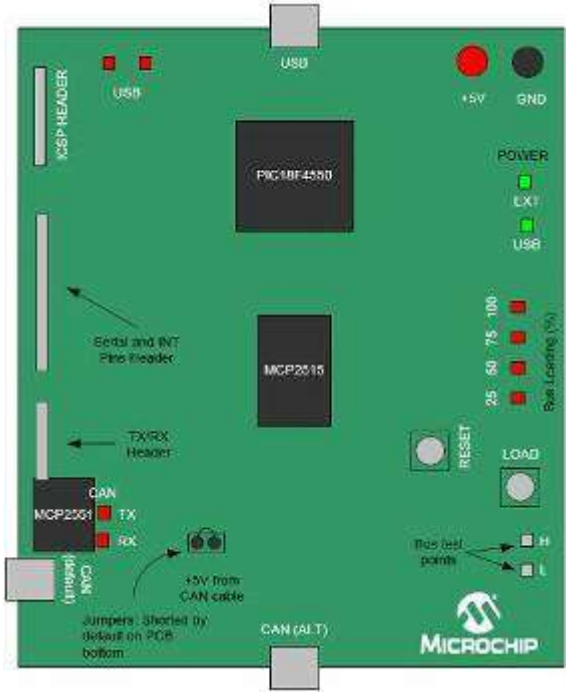

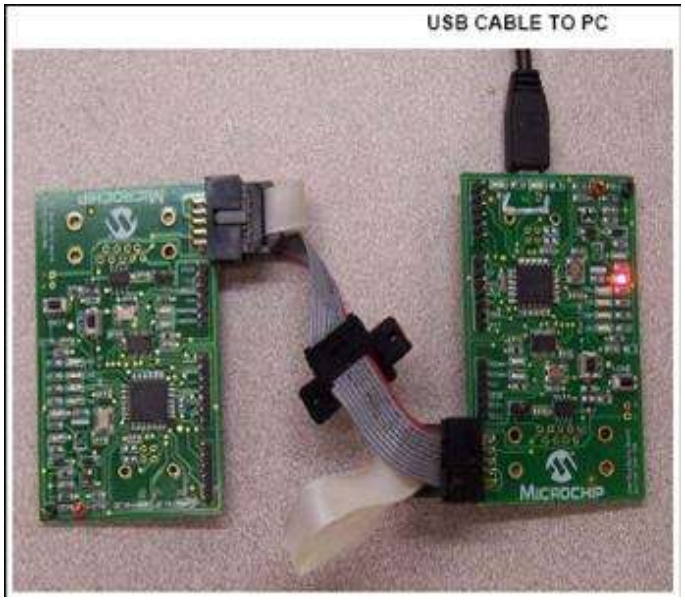

<< BACK

P/N: MCP2515DM-BM

MCP2517FD Evaluation Board

Online Datasheet

The MCP251XFD CAN FD Motherboard provides a simple, low-cost board to evaluate the MCP2517FD family of devices. The board features one mikroBUS™ socket to accommodate the MCP2517FD click Board. The MCP251XFD CAN FD Motherboard together with the MCP2517FD click Board can be used to implement a CAN FD node. The motherboard contains a PIC32MX470F512H

A firmware Application Program Interface (API) is available for rapid application development, which is written in C programming language for MPLAB® Harmony Integrated Software Framework. It can be easily ported to other microcontroller.

Products supported:

- MCP2517FD

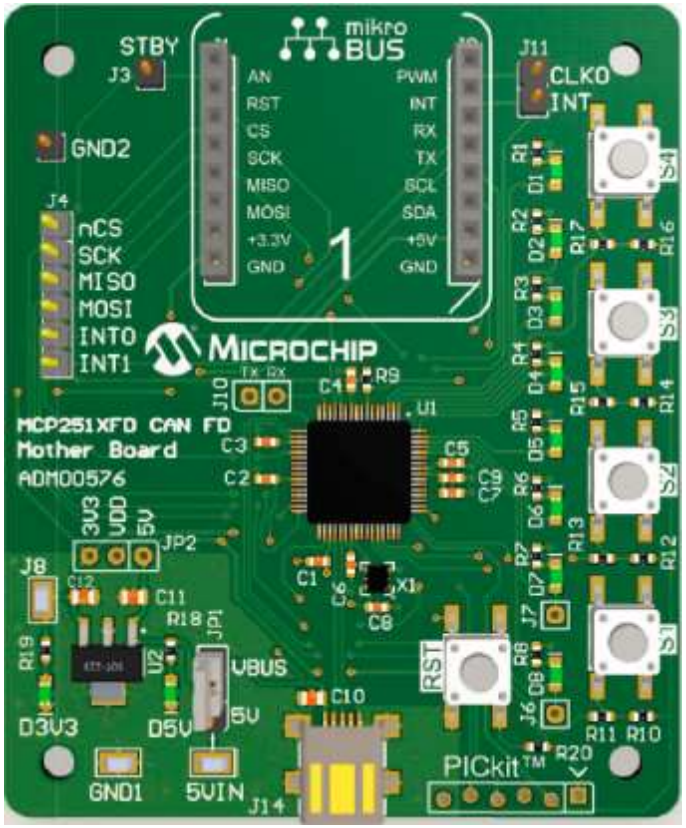

<< BACK

ATA663x Demo Board

Online Info

The development board for the complete device family is shipped with all components necessary to quickly begin the development of a LIN node. Depending on which device is soldered on the development board, different components are assembled. The development supports the following features:

- All components necessary needed for the supported devices
- All pins easily accessible
- Choice of master or slave operation (D2 and R2 mounted per default for master operation)
- Switching into normal, silent or sleep mode via two jumpers
- LEDs for operation indication
- Ground coulter clip for easy probe connection while measuring with oscilloscope
- Easily adaptable watchdog times by replacing a single resistor
- Push buttons included for creating a local wake-up from sleep or silent mode
- Relays for application specific tests of the ATA663331/54

Products supported

- ATA663203
- ATA663231
- ATA663232
- ATA663254
- ATA663255
- ATA663331
- ATA663354
- ATA663431
- ATA663454

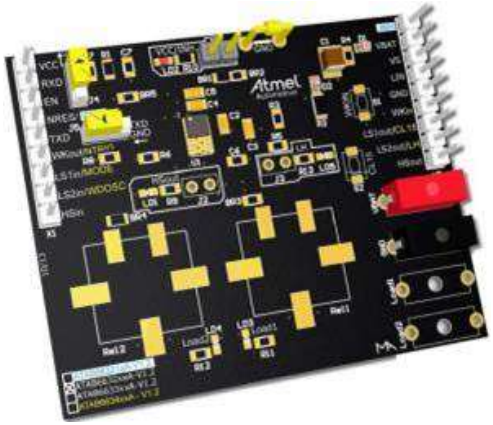

<< BACK

P/N: ATAB663xxxx

MCP2140 IrDA® Wireless Temperature Demo Board

Online Info

The MCP2140 IrDA® Standard Protocol Stack Controller device allows the system designer to implement a low-cost wireless IR port in any application, providing support for the IrDA standard protocol stack and IrDA standard bit encoding/decoding.
The MCP2140 IrDA Standard Wireless Temperature Sensor Demo Board is used to evaluate and demonstrate the MCP2140 device in data-logging application by transmitting ambient temperature to a PDA (e.g., Palm™ PDA) or laptop computer. It is intended to serve as an example to assist system designers in developing an IrDA standard node using the MCP2140 device.

Products supported

- MCP2140
- TC1047A
- PIC18F1320

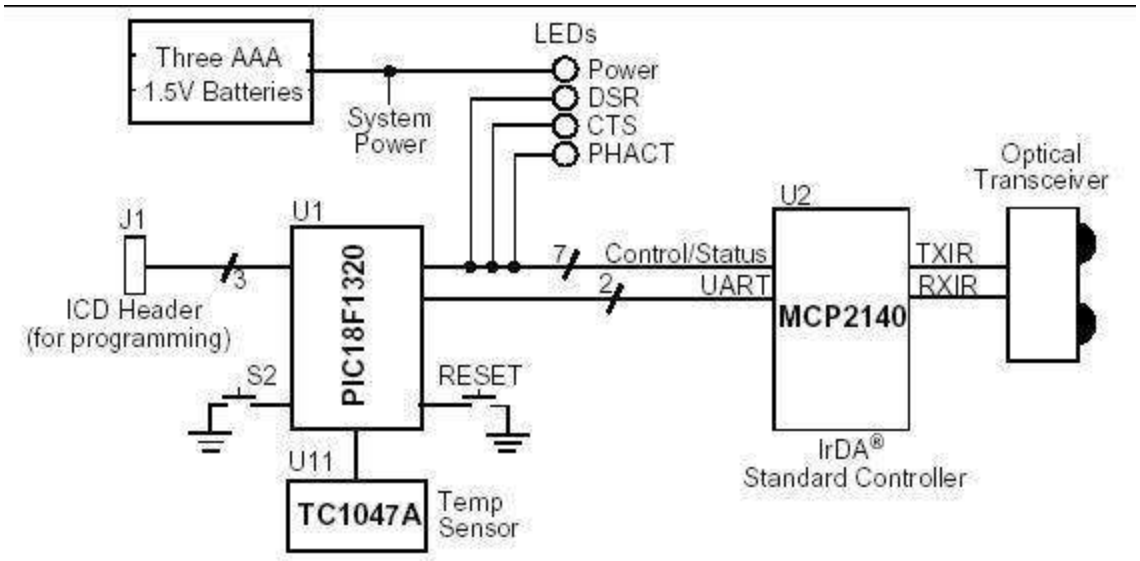

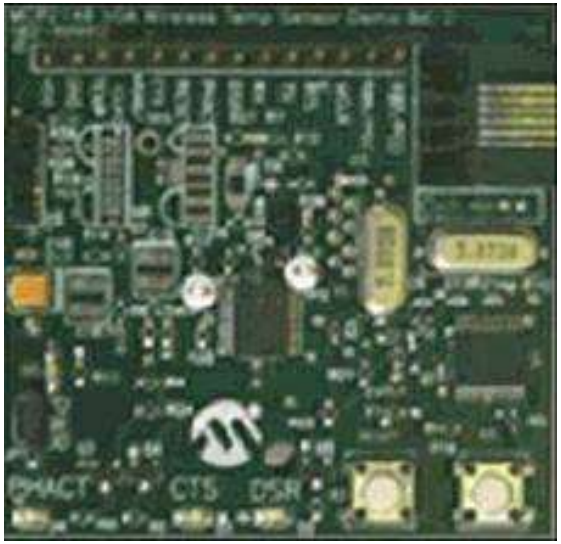

<< BACK

P/N: MCP2140DM-TMPSNS

CAN/LIN PICtail Plus Daughter Board

Online Info

The CAN/LIN PICtail™ (Plus) Daughter Board (AC164130-2) can be used with either the Explorer 16 Board or the PIC18 Explorer Board. This daughter board is used to facilitate rapid implementation and evaluation of applications that use Controller Area Network (CAN) and Local Interconnect Network (LIN) interfaces. The PICtail Plus interface is used for connection to Explorer 16 Development Board for 16-bit and 32-bit MCUs. The PICtail interface is used for connection to the PIC18 Explorer for PIC18 8-bit microcontrollers.

Products supported

- MCP2551
- MCP2021

<< BACK

P/N: AC164130-2

PICDEM CAN-LIN 2 Demo Board

Online Info

Microchip offers two similar PICDEM CAN-LIN demonstration boards to support different PICmicro® devices. All demonstrate the main features of the devices, especially those features of the integrated CAN module. In addition to the CAN network, the board also employs a LIN sub-network using Microchip's PIC16C43X and PIC18F320 device families.

Products supported

- PICDEM CAN-LIN 2 supports:
  - 28-pin PIC18F258 and PIC18F2680/2682/2685 devices
  - 40-pin PDIP PIC18F458 and PIC18F4680/4682/4685 devices
  - 20-pin PDIP PIC16C432 with integrated LIN Bus transceiver

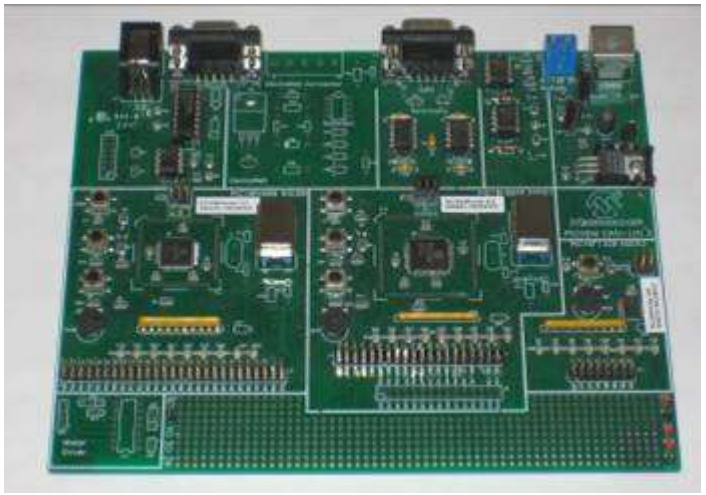

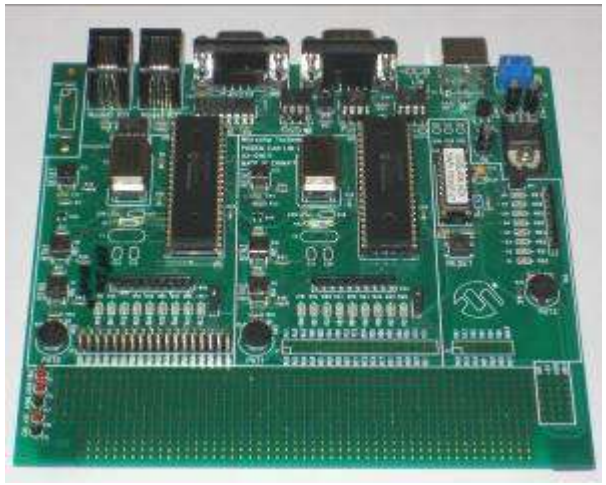

<< BACK

P/N: DM163011

LIN Serial Analyzer

Online Info

The LIN Serial Analyzer development system enables a Personal Computer (PC) to communicate with a LIN (Local Interface Network) bus. The PC program uses a graphical user interface to enter and display message frames occurring on the target bus.
The LIN Serial Analyzer consists of several components, that together, make a network debug and analysis tool.

<< BACK

P/N: APGDT001

Automotive Ambient Lighting Module

Online Info

The Automotive Ambient Interior Lighting Module Reference Design demonstrates microcontroller-based control of RGB LED devices. This module can be controlled remotely by a master body controller via a LIN bus. These modules are offered in a very compact form-factor board and comprise of a PIC12F615 MCU, an MCP2021 LIN transceiver/voltage regulator, and RGB LED. LIN commands are interpreted by the module to control color mixing (16,383 colors) and intensity (1023 levels).

Products supported

- MCP2120
- PIC12F615

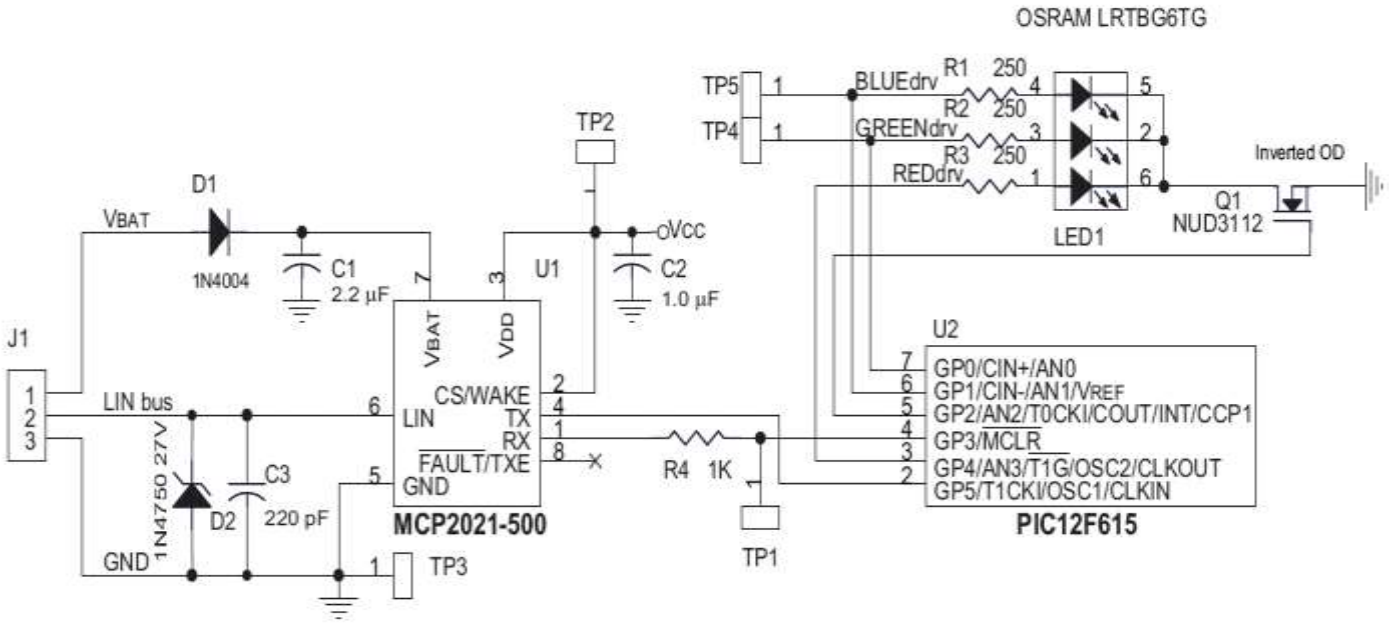

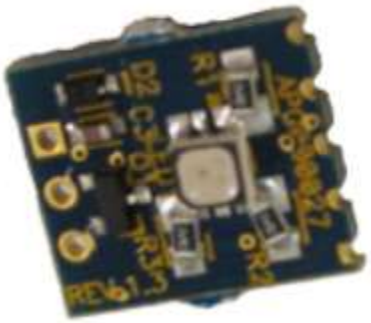

<< BACK

P/N:APGRD004

MCP23x17 Eval Board

Online Info

The MCP23X17 Evaluation Board allows the system designer to evaluate the operation of the MCP23X17 General Purpose I/O (GPIO) expander. The board demonstrates the MCP23X17 performance in a simple circuit (4 inputs and 12 outputs).

Products supported

- MCP23017
- MCP23S17

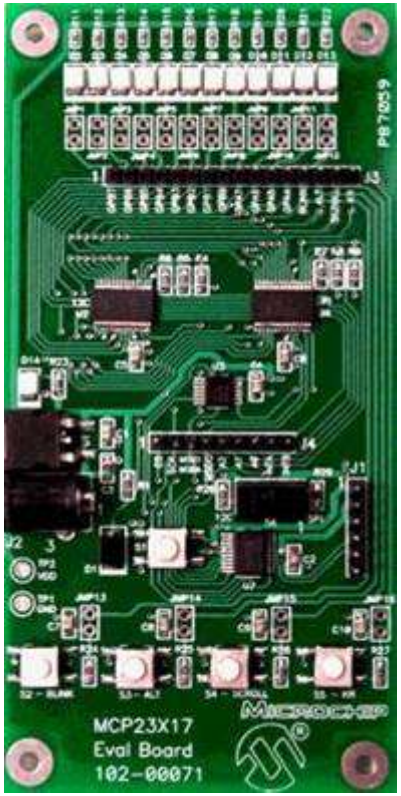

<< BACK

P/N: MCP23X17EV

MCP23x08 Eval Board

Online Info

The MCP23008/MCP23S08 Evaluation Board allows the system designer to quickly evaluate the operation of the MCP2X08 8-bit GPIO expanders. The board demonstrates the I/O expansion capabilities/operation of both the MCP213008 (I^2C™ Interface) and MCP23S08 (SPI interface).

Products supported

- MCP23008
- MCP23S08

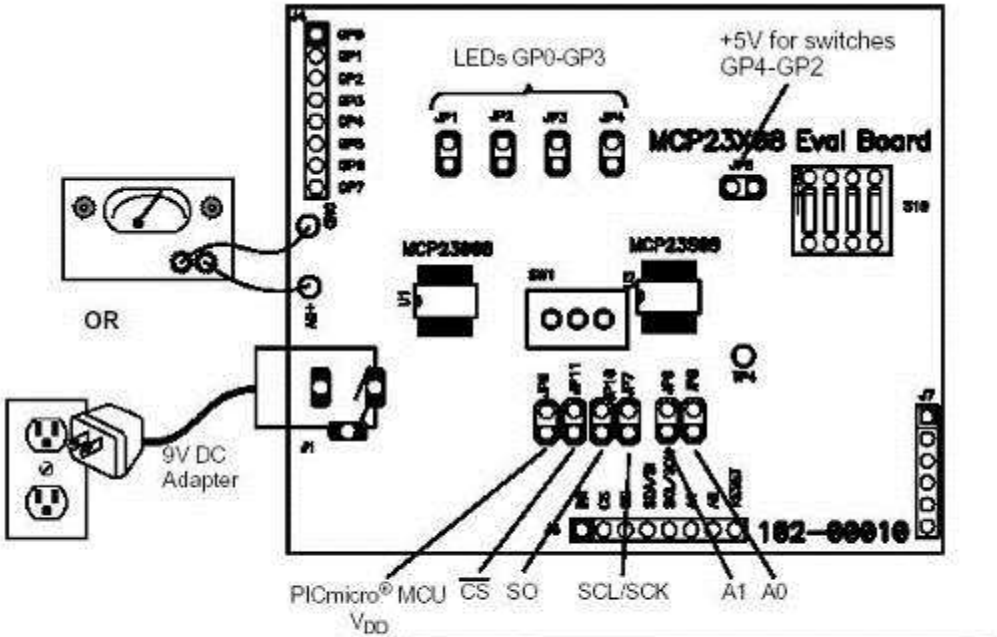

Note: All jumpers (except JP10) are shorted by default with a trace on the bottom of the board.

<< BACK

P/N: MCP23X08EV

GPIO Expander Keypad Demo Board

Online Info

The GPIO Expander Keypad and LCD Demo Board allows the system designer to evaluate the operation of the MCP23X17 and MCP23X08 General Purpose I/O (GPIO) Expanders. The board demonstrates the GPIO Expanders' performance in keypad and LCD example.

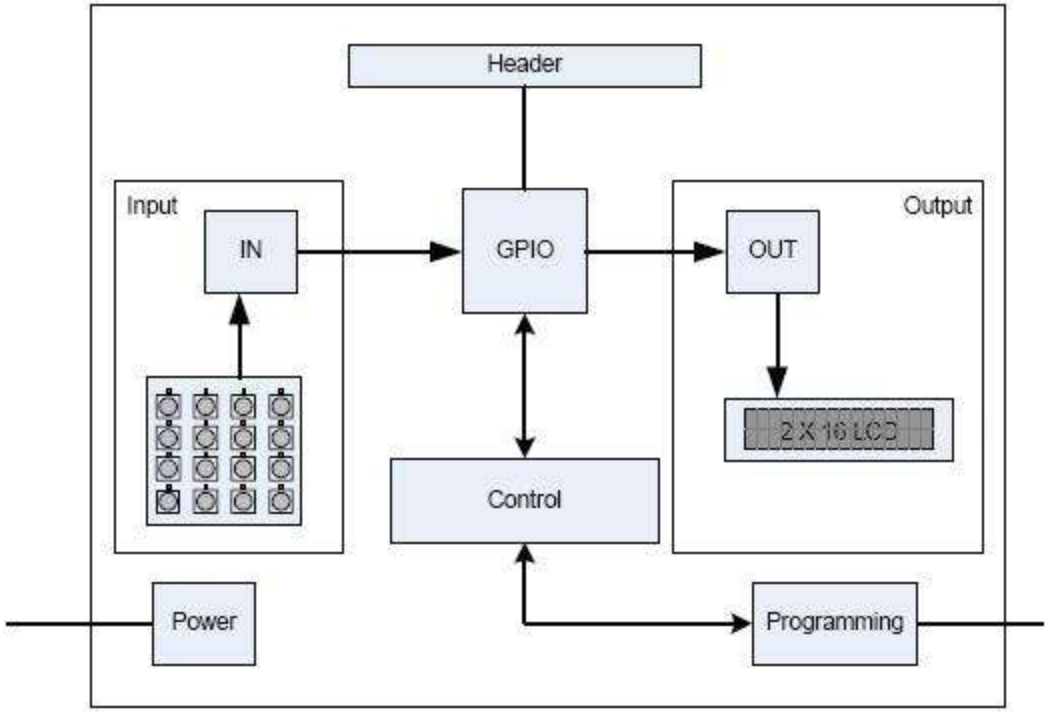

Products supported

- MCP23008
- MCP23S08
- MCP23017
- MCP23S17
- MCP1702
- PIC18F4550

<< BACK

P/N: GPIODM-KPLCD

PICKit™ Serial SPI Demo Board

Online Info

The PICkit™ Serial SPI Demo Board demonstrates SPI serial communications and operation of the following devices:

- 25LC020A – 2K SPI Bus Serial EEPROM
- TC77-5.0 – Thermal Sensor with SPI Interface
- MCP3201 – 2.7V 12-bit A/D Converter with SPI Serial Interface
- MCP4822 – 12-bit DAC with Internal V_{REF} and SPI Interface
- MCP41010 – Single/Dual Digital Potentiometer with SPI Interface
- MCP6S92 – Single-Ended, Rail-to-Rail I/), Low-Gain PGA
- MCP23S08 – 8-bit I/O Expander with Serial Interface

The PICkit™ Serial SPI Demo Board was designed to easily connect to the PICkit Serial Analyzer (DV164122). The PICkit Serial Analyzer provides the SPI master mode serial communications and power. The PICkit™ Serial SPI Demo Board devices all operate in the SPI slave mode and can easily be connected to virtually any demo or development board by connecting the communications lines to connector P1.

Products supported

- TC77
- MCP3201
- MCP4822
- MCP41010
- MCP6S92
- MCP23S08
- 25LC020A

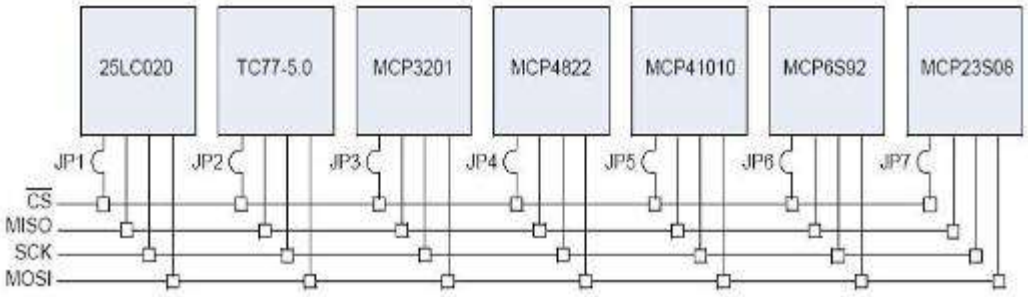

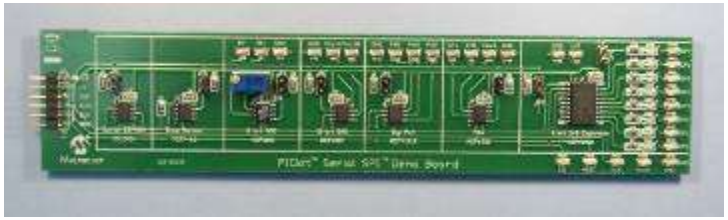

<< BACK to General Purpose
<< BACK to DACs/Digital Pot
<< BACK to Linear
<< BACK to Thermal
<< BACK to Interface

P/N: PKSERIAL-SPI1

PICKit™ Serial I2C™ Demo Board

Online Info

The PICkit™ Serial I²C™ Demo Board demonstrates I²C™ serial communications and operation of the following devices:

- 24LC02B – 2K Serial EEPROM
- MCP9801 – High-Accuracy Temperature Sensor
- MCP3221 – Low-Power 12-bit A/D Converter
- TC1321 – 10-bit DAC
- MCP23008 – 8-bit I/O Expande

The PICkit™ Serial I²C™ Demo Board was designed to easily connect to the PICkit Serial Analyzer (DV164122). The PICkit Serial Analyzer provides the I²C™ master mode serial communications and power. The board devices all operate in the I²C™ slave mode and can easily be connected to virtually any demo or development board by connecting the communications lines to connector P1.

Products supported

- MCP9801
- MCP3221
- TC1321
- MCP23008
- 24LC02B

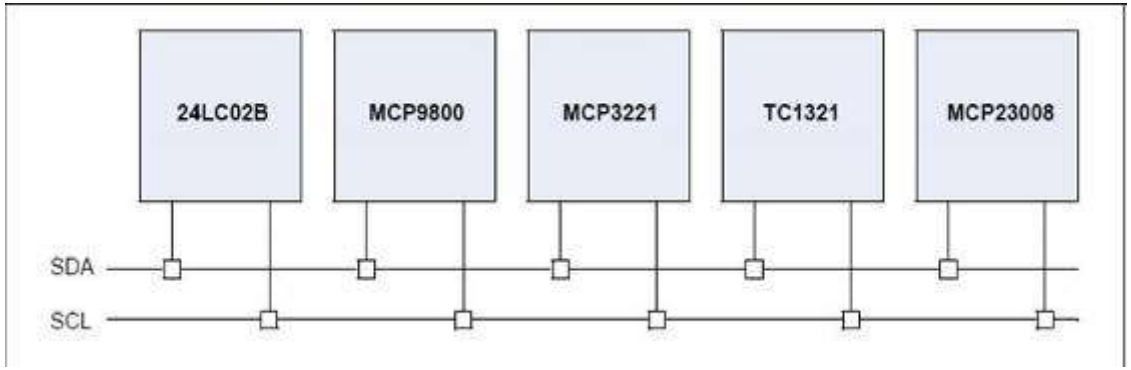

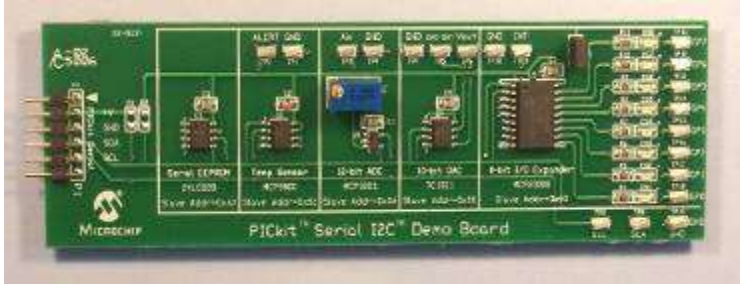

<< BACK to General Purpose

<< BACK to DACs/Digital Pot

<< BACK to Thermal

<< BACK to Interface

P/N: PKSERIAL-I2C1

PSRR and Digital Noise Evaluation Board

Online Info

The PSRR and Digital Noise Evaluation Board (104-00139) is designed to explore and quantify the effects of power and digital noise on system performance. These experiments will help system designers understand the impact that power and digital noise can have in their design.

The PSRR and Digital Noise Evaluation Board supports measurement of Power Supply Rejection Ratio (PSRR) performance of Operational Amplifiers, as well as illustrates effects of Digital Interface spikes on Chip Select pins (and V_{DD}, V_{OUT}, V_{IN} pins). The various measurements demonstrate importance of I_{DDQ} on PSRR and Digital Noise performance.

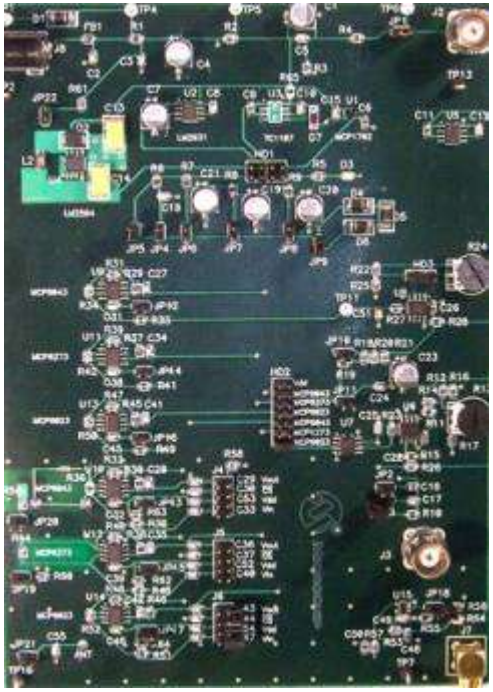

<< BACK

P/N: INTRFCEV

PSRR and Digital Noise Evaluation Board

Online Info

The PSRR and Digital Noise Evaluation Board (104-00139) is designed to explore and quantify the effects of power and digital noise on system performance. These experiments will help system designers understand the impact that power and digital noise can have in their design.

The PSRR and Digital Noise Evaluation Board supports measurement of Power Supply Rejection Ratio (PSRR) performance of Operational Amplifiers, as well as illustrates effects of Digital Interface spikes on Chip Select pins (and V_{DD}, V_{OUT}, V_{IN} pins). The various measurements demonstrate importance of I_{DDQ} on PSRR and Digital Noise performance.

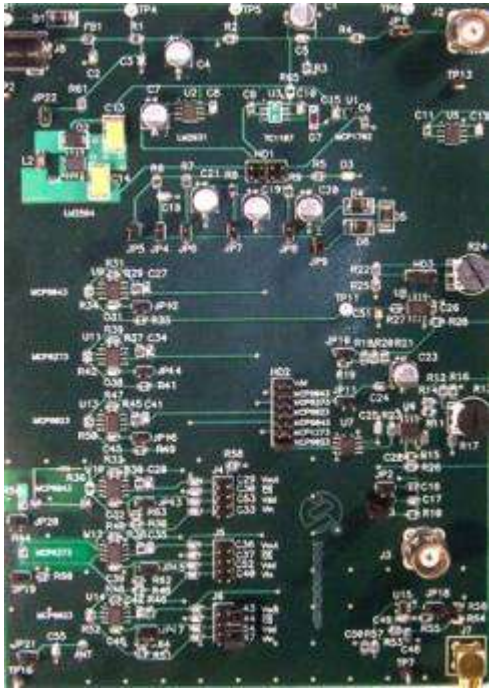

<< BACK

P/N: INTRFCEV

Electrical Field Evaluation Board

Online Info

The E-Field Evaluation Board (EFIELDEV) is designed to demonstrate E-field coupling under various conditions on a Printed Circuit Board (PCB). These experiments will help system designers understand the impact PCB layout techniques have on controlling E-field noise in their design.

The E-Field Evaluation Board PCB supports measurement of capacitive trace-trace coupling, in 1-layer, 2-layer, and 3-layer experiments; in each experiment, Transmitter-to-Receiver PCB trace spacings are varied, to demonstrate how coupling changes with distance.

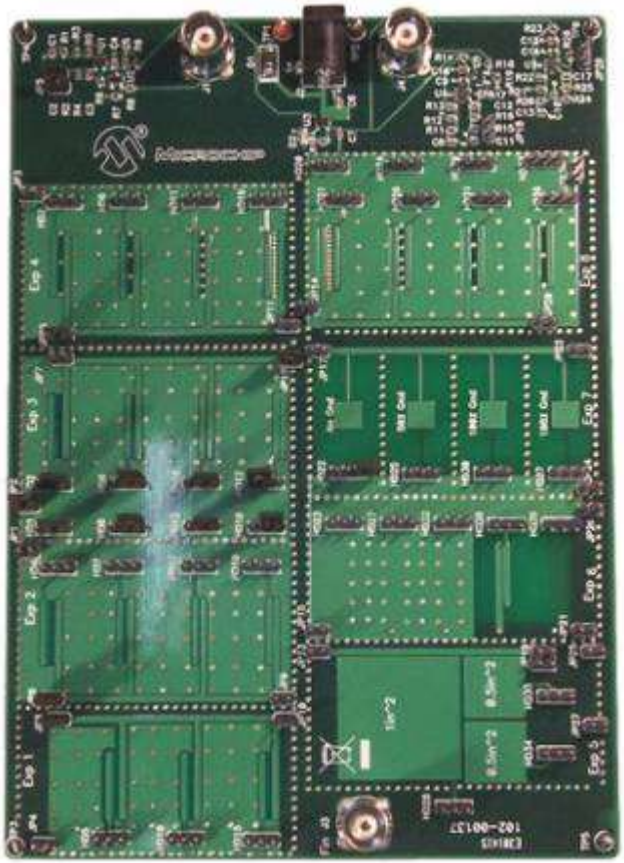

<< BACK

P/N: EFIELDEV

Electrical Field Evaluation Board

Online Info

The E-Field Evaluation Board (EFIELDEV) is designed to demonstrate E-field coupling under various conditions on a Printed Circuit Board (PCB). These experiments will help system designers understand the impact PCB layout techniques have on controlling E-field noise in their design.

The E-Field Evaluation Board PCB supports measurement of capacitive trace-trace coupling, in 1-layer, 2-layer, and 3-layer experiments; in each experiment, Transmitter-to-Receiver PCB trace spacings are varied, to demonstrate how coupling changes with distance.

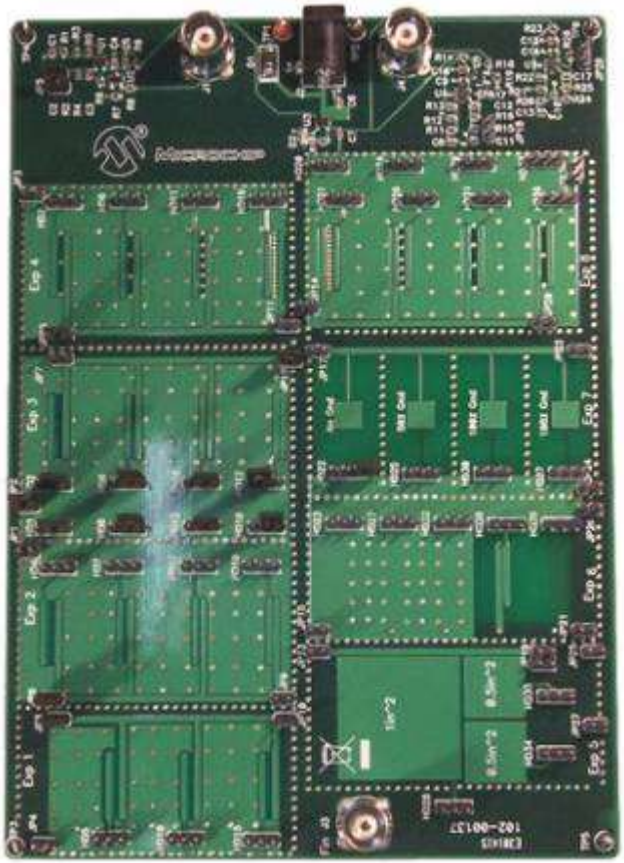

<< BACK

P/N: EFIELDEV

Magnetic Field Evaluation Board

Online Info

The Magnetic Field Evaluation Board (104-00138) is designed to demonstrate H-field coupling under various conditions. These experiments will help system designers understand the impact PCB layout techniques have on controlling magnetic coupling in their design.

The Magnetic Field Evaluation Board supports measurement of inductive (magnetic) trace-to-loop and loop-to-loop coupling, with and without shielding by planes.

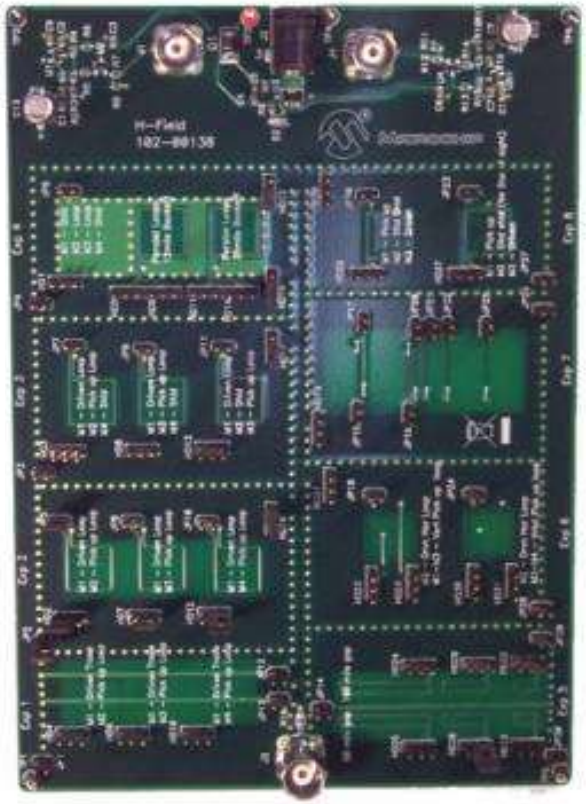

<< BACK

P/N: HFIELDEV

Magnetic Field Evaluation Board

Online Info

The Magnetic Field Evaluation Board (104-00138) is designed to demonstrate H-field coupling under various conditions. These experiments will help system designers understand the impact PCB layout techniques have on controlling magnetic coupling in their design.

The Magnetic Field Evaluation Board supports measurement of inductive (magnetic) trace-to-loop and loop-to-loop coupling, with and without shielding by planes.

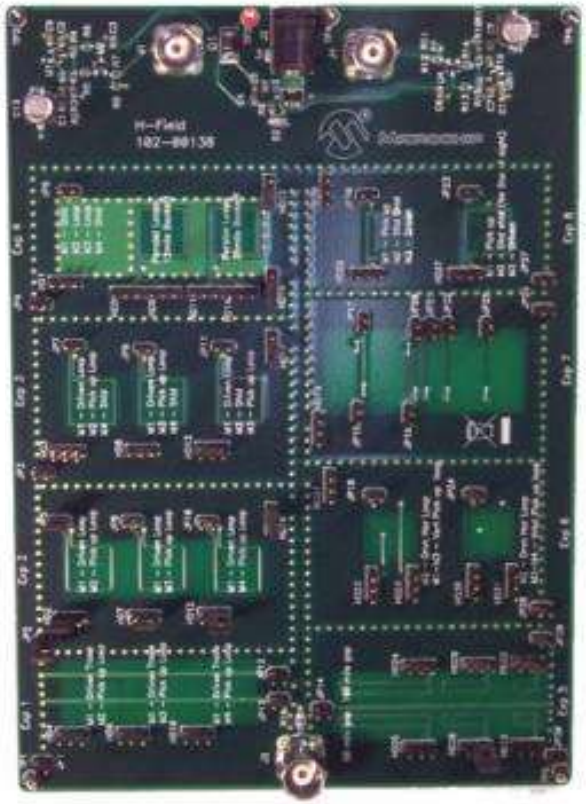

<< BACK

P/N: HFIELDEV

Online Info

MICUSB Evaluation Board

The Serial Programmer (MICUSB) is a hardware and software solution supporting I^2C, SWI, and other serial bus based products. MICUSB operates as a bus master to communicate with slave devices using a USB-to-serial converter, supporting both generic bus interface mode and hardware-specific profiles for command and control of semiconductor products.

Products supported

- MIC2870
- MIC2871
- MIC23156
- MIC7400

<< BACK

P/N: MICUSB-DONGLE-EV

MCP2030 Bidirectional Communication Demo Kit

Online Info

The MCP2030 Bidirectional communication Demo Kit consists of two Transponders and a Base Station unit. The Transponder consists of an MCP2030 (stand-alone, three-axis analog front-end device), a PIC16F636, and a MCP3421 (18-bit delta-sigma analog-to-digital converter). Unlike the existing PKE Reference Design System (P/N: APGRD001) from Microchip Technology, this Transponder uses stand-alone devices for the bidirectional passive keyless entry (PKE) operation. This system also demonstrates the received signal strength indicator (RSSI) function using the MCP3421 delta-sigma ADC.

The MCP203 Bidirectional Communication Demo Kit has been designed for easy modification by customers. The firmware of both the Transponder and Base Station units can be easily modified using the MPLAB® in-circuit serial programmers.

Products supported

- MCP2030
- MCP3421
- TC4421
- PIC18F4680
- PIC16F636

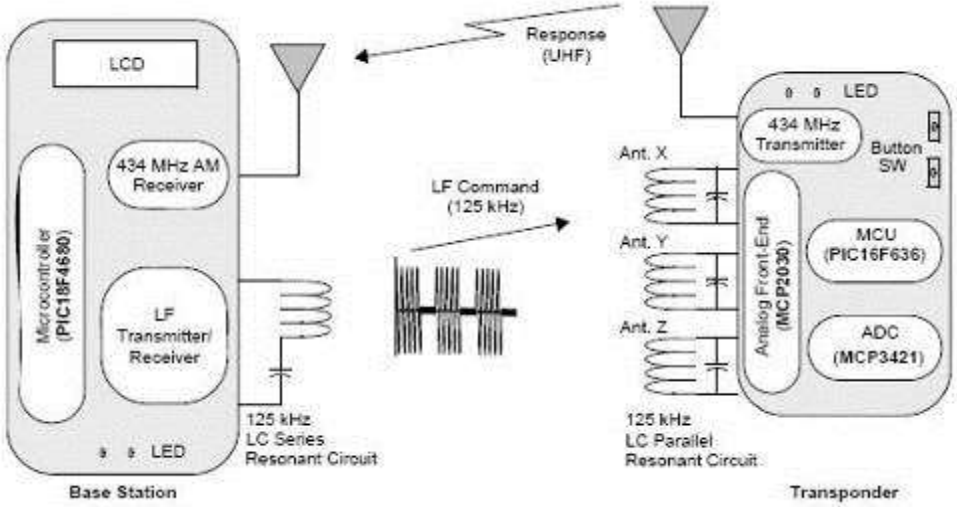

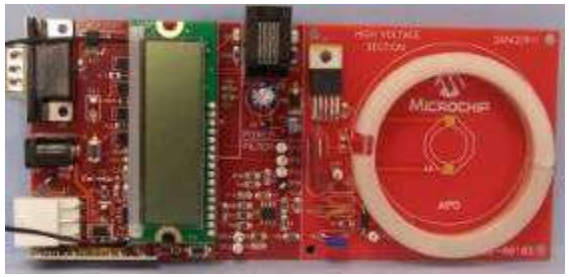

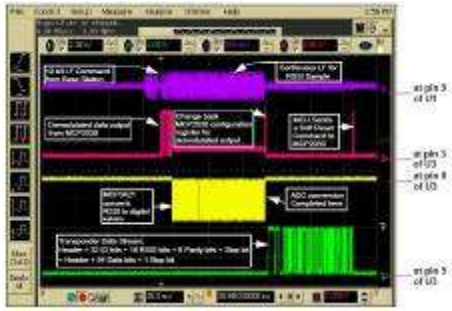

<< BACK

P/N: MCP2030DM-TPR & MCP2030DM-BS

RN2483 PICtail/PICtail Plus Board

Online Info

The RN2483 LoRa® Technology PICtail™/PICtail Plus Daughter Board is a demonstration board that showcases the Microchip RN2483 Low-Power Long Range, LoRa Technology Transceiver Module. The RN2483 LoRa Technology PICtail/PICtail Plus Daughter Board provides access to the RN2483 UART and General Purpose Input and Output (GPIO) ports.

The high-speed UART interface and the GPIO ports are available on the module to configure, control, and transfer data. The RN2483 LoRa Technology PICtail/PICtail Plus Daughter Board has PICtail and PICtail Plus connectors to interface with a PIC® microcontroller (MCU) on the development boards that support PICtail or PICtail Plus interface with the required pin mapping. The PICtail board also has an on-board PIC18 MCU available for custom user functions. It is pre-programmed to provide a simple USB-to-UART serial bridge enabling easy serial connection. Demonstration of the RN2483 is performed by plugging the daughter board into a USB port of a PC. The USB port powers the daughter board and enables the user to communicate using the RN2483's ASCII commands.

Development of the RN2483 with Microchip's PIC MCU line is possible via the 28-pin PICtail connector to a PIC18 Explorer or 30-pin card edge PICtail Plus connector to an Explorer 16.

<< BACK

RN2483 LoRa™ Mote

Online Info

The RN2483 LoRa™ Mote is a LoRaWAN™ Class A end-device based on the RN2483 LoRa™ modem. As a standalone battery-powered node, the Mote provides a convenient platform to quickly demonstrate the long-range capabilities of the modem, as well as interoperability when connected to LoRaWANv1.0 compliant gateways and infrastructure.

The Mote includes light and temperature sensors to generate data, which are transmitted either on a fixed schedule or initiated by a button-press. An OLED display provides feedback on connection status, sensor values and downlink data or acknowledgements. A standard USB interface is provided for connection to a host computer, providing a bridge to the UART interface of the RN2483 modem. As with all Microchip RN family of products, this enables rapid setup and control of the on-board LoRaWAN™ protocol stack using the high level ASCII command set.

RN2483 LoRa™ Mote Board
(Part # DM164138)

Key Features:

- 868/915 MHz High-Frequency SMA Connector
- 433 MHz Low-Frequency Antenna Point
- Module Breakout Header 1
- Module Breakout Header 2
- Module Connector
- SSD1306 (128 x 64) Dot Matrix OLED
- Module ICSP™ Programming Pads
- Mote ICSP Programming Through Hole
- Sharp (GA1A1S202WP) Ambient Light Sensor
- MCP9700T – Linear Active Thermistor
- MCP1825S – LDO Regulator
- PIC18LF25K50 8-bit MCU

<< BACK

RN2903 PICtail/PICtail Plus Board

Online Info

The RN2903 LoRa® Technology PICtail™/PICtail Plus Daughter Board is a development board that showcases the Microchip RN2903 Low-Power Long Range, LoRa® Technology Transceiver Module.

Development of a LoRa system with the RN2903 connected to Microchip's PIC MCU line is possible on PIC18 Explorer boards via the 28-pin PICtail connector, or on Explorer 16 boards using the 30-pin card edge PICtail Plus connector.

The PICtail board also has an on-board PIC18 MCU available for custom user functions. It is pre-programmed to provide a simple USB-to-UART serial bridge enabling easy serial connection. Demonstration of the RN2903 is performed by plugging the daughter board into a USB port of a PC. The USB port powers the daughter board and enables the user to communicate using the RN2903's simple ASCII command interface.

Key Features

- Microchip RN2903 Low-Power Long Range, LoRa® Technology Transceiver Module
- SMA connector for 915 MHz band
- Solder pads around the module for GPIOs, power pins and communication signals
- Supply Current measurement points
- On-board LDO
- UART traffic LEDs
- ICSP header to program the on-board PIC18 MCU
- USB connector
- PICtail connection interface
- PICtail Plus connection interface
- PIC18 MCU for custom functions

<< BACK

RN2903 LoRa® Mote

Online Info

The RN2903 LoRa® Mote is a LoRaWAN™ Class A end-device based on the RN2903 LoRa modem. As a standalone battery-powered node, the Mote provides a convenient platform to quickly demonstrate the long-range capabilities of the modem, as well as to verify inter-operability when connecting to LoRaWANv1.0 compliant gateways and infrastructure.

The Mote includes light and temperature sensors to generate data, which are transmitted either on a fixed schedule or initiated by a button-press. An OLED display provides feedback on connection status, sensor values and downlink data or acknowledgements. A standard USB interface is provided for connection to a host computer, providing a bridge to the UART interface of the RN2903 modem. As with all Microchip RN family of products, this enables rapid setup and control of the on-board LoRaWAN™ protocol stack using the high level ASCII command set.

RN2903 LoRa® Mote Board
(Part # DM164139)

Key Features:

- 915 MHz High-Frequency SMA Connector
- USB Mini-B Connector
- PIC18LF25K50 8-bit MCU
- Mote ICSP Programming
- OLED Display
- S1 & S2 Switches (for Menu Navigation)
- Ambient Light Sensor
- Linear Active Thermistor (MCP9700T)
- LDO Regulator (MCP1825S)
- Descriptive LEDs, (2) Controlled by PIC18, (2) Controlled by Module
- (2) AAA Battery Pack

<< BACK

ATSAMW25-XPRO

Online Info

Description:
The SAM W25 Xplained Pro evaluation kit is a wireless hardware platform to evaluate the ATSAMW25H18-MR510PB Wi-Fi module which is based on the industry - leading low - power 2.4GHz IEEE ® 802.11 b/g/n Wi-Fi ATWINC1500 SoC (System on Chip) combined with the ARM® Cortex ® - M0+ ATSAMD21G18A microcontroller from Atmel. Supported by the Atmel Studio integrated development platform, the kit provides easy access to the features of the Atmel ATSAMW25H18-MR510PB Wi-Fi module and explains how to integrate the device in a custom design. The Xplained Pro MCU series evaluation kits include an on-board Embedded Debugger and no external tools are necessary to program or debug the ATSAMW25H18-MR510PB Wi-Fi module. The Xplained Pro extension kits offers additional peripherals to extend the features of the board and ease the development of custom designs.

Key Features:
- The ATSAMW25H18-MR510PB Wi-Fi module with 2.4GHz IEEE ® 802.11 b/g/n Wi-Fi ATWINC1500 SoC (System on Chip) combined with the ARM® Cortex ® - M0+ ATSAMD21G18A microcontroller
- Embedded debugger (EDBG) — USB interface. Programming and debugging on board SAM W25 through Serial Wire Debug (SWD). Virtual COM-port interface to target via UART. Atmel Data Gateway Interface (DGI) to target via SPI, I2C, GPIO. One yellow status LED. One green LED - Board Power status.
- Three possible power sources — 1: External power. 2: Target USB. 3: Embedded debugger USB
- Two mechanical buttons (user and reset button)
- One yellow user LED
- One Wi-Fi Status LED
- One extension header
- Embedded debugger USB

<< BACK

ATWINC1500-XSTK

Online Info

Description:
The ATWINC1500-XSTK Xplained Pro starter kit is a hardware platform for evaluating the ATWINC1500 low cost, low power 802.11 b/g/n Wi-Fi network controller module. Supported by the Atmel Studio integrated development platform, the kit provides easy access to the features of the ATWINC1500 and explains how to integrate the device in a custom design. The Xplained Pro series of evaluation kits include an on-board Embedded Debugger, and no external tools are necessary to program or debug the SAMD21 host MCU that drives the ATWINC1500. The Xplained Pro extension kits offer additional peripherals to extend the features of the board and ease the development of custom designs.

Key Features:
- ATWINC1500 module mounted on ATWINC1500 Xplained Pro Extension
- ATSAMD21-XPRO host MCU board for driving the ATWINC1500 Xplained Pro Extension
- I/O1 Xplained Pro for sensor and SD-card input to host MCU
- Embedded debugger (EDBG) for programming SAMD21 host MCU
- Virtual COM-port interface to host MCU via UART
- Wired firmware updates for ATWINC1500 module via virtual COM-port interface
- Data Gateway Interface (DGI) to host MCU via SPI and TWI
- ATECC108 CryptoAuthentication device connected to host MCU
- Two extension headers
- Three possible power sources
- External power
- Target USB
- 32KHz crystal
- 16MHz crystal

<< BACK

MRF24WN0MA Wi-Fi PICtail/PICtail Plus Board

Online Info

The MRF24WN0MA Wi-Fi PICtail/PICtail Plus Daughter Board is a demonstration board for evaluating Wi-Fi connectivity using PIC microcontrollers and the MRF24WN0MA module. This product is compatible with the Explorer 16 Development Board (DM240001), and PIC32 Starter Kit (DM320001) with I/O Expansion Board (DM320002).

The TCP/IP stack and demo applications can be downloaded from www.microchip.com/harmony

Key Features:

- Supports low-power, 802.11b/g/n to 5mbps data-rate
- Wi-Fi FCC (USA), IC (Canada), ETSI (Europe) Certified
- Integrated PCB Antenna with Simple four-wire SPI interface to PIC® microcontroller
- WEP, WPA-PSK, WPA2-PSK Security
- SoftAP, WPS, and Wi-Fi Direct Client functionality

P/N = AC164153

<< BACK

ATWILC1000-SD Evaluation Kit

Online Info

Description:
The ATWILC1000-SD evaluation kit is a hardware platform to evaluate the ATWILC1000-MR110PB module.

The WILC1000 is an IEEE 802.11 b/g/n IOT link controller SoC. It is the ideal add-On to existing MCU solutions bringing Wi-Fi through UART or SPI/SDIO-to-Wi-Fi interface. The WILC1000 connects to any Atmel AVR or SMART MCU with minimal resource requirements. The WILC1000 most advanced mode is a single stream 1x1 802.11n mode providing up to 72 Mbps PHY throughput. WILC1000 features fully integrated Power Amplifier, LNA, Switch and Power Management. The WILC1000 provides multiple peripheral interfaces including UART, SPI, SDIO and I2C. The only external clock source needed for the WILC1000 is a high-speed crystal or oscillator with a wide variety of reference clock frequencies supported (between 12 – 32 MHz). The WILC1000 is available in a QFN package.

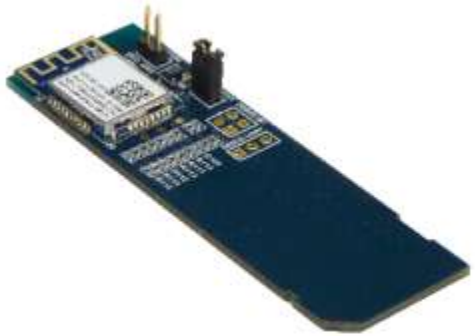

Key Features:
- ATWILC1000 module mounted on ATWILC1000-SD board
- Connects to standard SD/MMC connector
- The ATWILC1000-MR110PB module is a single-band 2.4GHz Wi-Fi connectivity link controller solution
- Optional external Power supply and Debug headers included
- Supported with standard SDIO drivers on github

<< BACK

Online Info

Wi-Fi G Demo Board

The Wi-Fi® G Demo Board is a compact demonstration platform for customers to easily evaluate and configure Microchip's new MRF24WG0MA Wi-Fi module. The demo board is a fully-functional standalone web server powered by 2 AAA batteries. It comes with a PIC32 pre-programmed with the Microchip TCP/IP stack, connected to an onboard, fully-certified MRF24WG0MA Wi-Fi module.

Key Features:
•Complete IEEE 802.11 b/g Wi-Fi Solution
•Supports Infrastructure/Ad hoc networks and SoftAP networking
•Web server allows for configuration of network settings
•Headers bring out signals for quick prototyping

The Wi-Fi G Demo Board Offers:
•Schematics
•Complete applications compliant with Microchip TCP/IP reference source code library
•Reference application source code

Kit Contents:
•Wi-Fi G Demo Board
•Wi-Fi G Demo Board Information Sheet

P/N = DV102412

<< BACK

MRF24WG0MA Wi-Fi G PICtail/PICtail Plus Board

Online Info

The Wi-Fi PICtail/PICtail Plus Daughter Board is a demonstration board for evaluating Wi-Fi connectivity using PIC microcontrollers and the MRF24WG0MA module. This product is compatible with the Explorer 16 Development Board (DM240001), and PIC32 Starter Kit (DM320001) with I/O Expansion Board (DM320002).

The TCPIP stack and demo applications can be downloaded from www.microchip.com/MLA

Module Key Features:

•Supports low-power, 802.11b/g to 5mbps data-rate
•Wi-Fi FCC (USA), IC (Canada), ETSI (Europe) Certified
•Integrated PCB Antenna with Simple four-wire SPI interface to PIC® microcontroller
•WEP, WPA-PSK, WPA2-PSK Security
•SoftAP, WPS, and Wi-Fi Direct Client functionality

MRF24WG0MA Wireless-G PICtail™/PICtail Plus Daughter Board
(Part # AC164149)

P/N = AC164149

<< BACK

Online Info

ATSAMB11-XPRO

The SAMB11 Xplained Pro evaluation kit is a hardware platform to evaluate the ATSAMB11-MR510CA module for a complete Bluetooth Smart application on a ARM® Cortex®-M0 based MCU. The ATSAMB11-MR510CA module is based on Microchip's industry-leading lowest power Bluetooth Low Energy 4.1 compliant SoC, ATSAMB11 with 256KB of integrated flash.

Supported by the Atmel Studio integrated development platform, the kit provides easy access to the features of the ATSAMB11-MR510CA BLE module and explains how to integrate the device in a custom BLE application. The Xplained Pro evaluation kits include an on-board Embedded Debugger and no external tools are necessary to program or debug the ATSAMB11-MR510CA BLE module. The Xplained Pro extension kits offers additional peripherals to extend the features of the board and ease the development of custom designs.

Features:

- The ATSAMB11-MR510CA BLE module with 2.4GHz Bluetooth Low Energy 4.1 compliant SoC, ATSAMB11 SoC (System on Chip) with 256KB of integrated flash.
- Embedded debugger (EDBG) — Auto-ID for board identification in Atmel Studio, One yellow status LED, One green board power LED, USB interface, Programming and debugging on board SAM B11 through Serial Wire Debug (SWD), Virtual COM-port interface to target via UART, Atmel Data Gateway Interface (DGI) : SPI, I2C, Four GPIOs.
- Two possible power sources — External power and Embedded debugger USB.
- Two mechanical buttons — User and reset button
- One yellow user LED
- Option for battery header with reverse polarity connector
- On board Current Measurement Circuitry with header
- Two extension headers (EXT1 and EXT3)
- Embedded debugger USB
- On board temperature sensor
- 32KHz crystal, 12MHz crystal (EDBG)
- Supported with application examples in Atmel Software Framework

<< BACK

Online Info

ATBTLC1000-XSTK

The BTLC1000 Xplained Starter Kit is a hardware platform to evaluate the ATBTLC1000-MR110CA module with the ARM Cortex M0+ SAML21 Xplained Pro host MCU evaluation board. The Xplained Pro extension plugs into the SAML21 Xplained Pro evaluation board to quickly add Bluetooth Smart connectivity. The ATBTLC1000-MR110CA module is based on Microchip's industry-leading lowest power Bluetooth Low Energy 4.1 compliant SoC, ATBLTC1000-MU-T.

Supported by the Atmel Studio integrated development platform, the kit provides easy access to the features of the ATBTLC1000-MR110CA BLE module and explains how to integrate the device in a custom design with the Cortex M0+ SAML21 MCU.

Features:

- The ATBTLC1000-MR110CA BLE module with 2.4GHz BLE4.1 compliant ATBTLC1000A SoC (System on Chip)
- 3.3V power source from the Xplained Pro through XPro Extension header
- RESET switch (Option provided for user to mount)
- Power LED
- Current measurement header
- On Board Temperature Sensor
- SWD header (Option provided for user to mount)
- External SPI serial Flash (Option provided for user to mount)
- Extension Port Header — UART. Debug UART. GPIO
- 32KHz crystal
- Supported with application examples in Atmel Software Framework

<< BACK

BM70 PICtail™ / PICtail Plus Board

Online Info

The BM-70-PICtail/PICtail Plus Board is designed to emulate the function of Microchip's BM70 BLE module. It also enables the customer to evaluate and demonstrate the capabilities of the BM70 BLE module.

The board includes an integrated configuration and programming interface for plug-and-play capability. It also provides an integrated test environment for all functions supported in the BM70 BLE module. The development kit includes the BM70BLES1FC2 module and the BM70BLES1FC2 carrier board.

Features:

- Bluetooth® 4.2 Compliant BM70 module with on-board antenna and 2dBm output power
- Develop immediately using the USB interface and Microchip's Windows-based Configuration Tool
- PICtail interface for connection to Microchip's most popular Microcontroller development platforms, such as Explorer16
- USB indication, module status and User configurable LEDs
- Coin cell Battery, USB or PICtail power options
- Access to all BM70 Module pins

BM70 PICtail™/PICtail Plus Daughter Board
(Part # BM-70-PICtail)

<< BACK

BM78 Bluetooth Dual Mode PICtail™ / PICtail Plus Board

Online Info

The BM78 PICtail/PICtail Plus Board provides rapid prototyping and developing for Bluetooth data applications for Classic SPP or Bluetooth Low Energy. It can be powered via USB host or external battery. The BM-78-PICtail utilizes the BM78 module, a fully certified Bluetooth 4.2 dual mode RF module supporting Bluetooth Classic SPP (Serial Port Profile) and Bluetooth Low Energy (BTLE), to provide a Bluetooth serial data connection. The BM-78-PICtail provides a USB to UART converter allowing a flexible interface to the host PC, a PC terminal utility, and Smartphone Apps to drive both classic SPP and BTLE data connections.

Features:

- Fully certified on board Bluetooth 3.0+EDR and Bluetooth 4.2 stack
- Class 2 transmitter, +2dBM typical
- Transparent serial data connection over Bluetooth Classic Serial Port Profile (SPP) and Bluetooth Low Energy transparent serial data service
- Automatic configuration mode for quick setup (default)
- Manual configuration mode where MCU can access configuration settings
- Embedded MCP2200 USB-UART converter, no need for extra converter board or cable
- Integrated programming interface to update firmware and configuration settings

<< BACK

Online Info

RN-4020-PICtail

The RN4020 PICtail / PICtail Plus Board is a Bluetooth® Low Energy demonstration board that showcases the Microchip RN4020 module, a fully-certified Bluetooth Version 4.1 low energy module for designers who want to easily add low power wireless capability to their products. This flexible development board includes the RN4020 paired with an eXtreme Low Power PIC18F25K50 microcontroller.

This convenient development board includes a USB to UART interface for plug-and-play capability. The high-speed UART interface and the General Purpose Input Output (GPIO) ports are available on the RN4020 module to configure, control and transfer data. The RN-4020-PICtail also includes PICtail and PICtail Plus interfaces for connecting to Microchip development boards. The on-board PIC18 microcontroller can be custom programmed via the available PICkit serial programmer / debugger interface. The board also includes on-board connection and data status LEDs enabling rapid prototyping and fast time to market.

P/N = RN-4020-PICtail

Key Features:

- Enables flexible development with the RN4020 BTLE Module
- USB to UART Interface, to quickly get started
- Connection and data status LEDs
- PICtail™ and PICtail Plus interfaces for connection to Microchip development boards
- eXtreme Low Power PIC18F25K50 MCU on-board
- PICkit™ serial programmer / debugger interface
- Multiple options for programming and experimentation

<< BACK

RN4678 Bluetooth 4.2 Dual Mode PICtail™ Board

Online Info

RN4678 PICtail™ / PICtail Plus Board provides rapid prototyping and developing for Bluetooth data applications for Classic SPP or Bluetooth Low Energy. It can be powered via USB host or external battery. The RN-4678-PICtail utilizes the RN4678 module, a fully-certified Bluetooth 4.2 dual mode RF module supporting Bluetooth Classic SPP (Serial Port Profile) and Bluetooth Low Energy (BLE), to provide a Bluetooth serial data connection. The RN-4678-PICtail provides a USB to UART converter allowing a flexible interface to the host PC, a PC terminal utility, and Smartphone Apps to drive both classic SPP and BLE data connections.

Features:

- Easy to use development board with on-board Bluetooth 4.2 stack
- Class 2 transmitter, +2dBM typical
- Transparent serial data connection over Bluetooth Classic Serial Port Profile (SPP) and Bluetooth Low Energy transparent serial data service
- Automatic configuration mode for quick setup (default)
- Manual configuration mode where MCU can access configuration settings
- Embedded MCP2200 USB-UART converter, no need for extra converter board or cable
- Integrated programming interface to update firmware and configuration settings

<< BACK

RN4870 Bluetooth Low Energy PICtail Board

Online Info

The RN-4870-SNSR is a development board based on the ultra-compact Bluetooth 4.2 Low Energy RN4870 module. The RN4870 uses a simple ASCII command interface over the UART. The board enables evaluation of the RN4870 and development of Bluetooth low Energy applications in two different ways:

1) Out of the box: When plugged into the USB port of a PC, the board will enumerate as a Communication Device Class (CDC) Serial device. Through a terminal program, users can configure and control the module and transfer data using the easy to use provided command set.

2) As a PICtail/PICtail Plus, the board interfaces to Explorer 8 or Explorer 16 Development Board. The Explorer 8/16 modular development system works with one of hundreds of available PIC 8, 16, 32 bit Microcontrollers PIM (Plug-In-Modules). The PICtail bridges the host MCU UART to the RN4870's UART interface for data transfer or configuration using the straight-forward, easy-to-use ASCII style command set.

Features:

- Bluetooth® 4.2 Compliant RN4870 module with on-board antenna and 2dBm output power
- Plug-and-Play USB interface for configuring and controlling the module
- PICtail interface for connection to Microchip's most popular Microcontroller development platforms, such as Explorer 16
- USB indication, module status and User configurable LEDs
- Coin cell Battery, USB or PICtail power options
- Plug-in Sensor board with Potentiometer and Light sensor
- iOS app for demonstration

<< BACK

Online Info

RN-41-EK / RN-42-EK

The RN-41-EK / RN-42-EK is a fully certified Class 1 Bluetooth evaluation kit for the RN41-I/RM / RN42-I/RM module. It has the flexibility to connect directly to a PC via a standard USB interface or to embedded processors through the TTL UART interface. The status LEDs, switches, and signal headers enable rapid prototyping and integration into existing systems.

Key Features:

•Evaluation board with USB interface
•Fully certified Bluetooth 2.1 + EDR/2.1/2.0/1.1 module
•Low power (8-30 mA connected, 2 mA idle)
•Embedded Bluetooth stack profiles included (requires no host stack): GAP, SDP, RFCOMM and L2CAP, with SPP, HID, and DUN profiles
•Supports various modes including HCI and SPP/DUN
•FCC, IC, CE certified, RoHS compliant

P/N = RN-41-EK

P/N = RN-42-EK

<< BACK

RN52 Bluetooth Audio Evaluation Kit

Online Info

The RN-52-EK is an evaluation kit for the RN52, a fully certified Bluetooth version 3.0 audio module, and fully compatible with Bluetooth version 2.1 + EDR. It demonstrates the key features of the RN52 allowing designers to quickly and easily evaluate and develop prototypes.

P/N = RN-52-EK

Features:

•Based on RN52 Bluetooth audio module
•Demonstrates key features of RN52 module for embedded systems
•Allows designers to develop prototypes and proof of concept
•Dual channel audio output and input available in analog and digital formats
•Provides interface to external devices
•USB port to supply power and access to command interface
•Built-in amplifier for stereo audio output and 6 function buttons
•Additional support for codecs such as aptX®, AAC, MP3, and others

Supported Bluetooth Profiles:

•A2DP stereo audio (sink mode, SBC codec)
•AVRCP media player remote control
•HFP/HSP can accept a phone call from mobile phone
•SPP allows serial data over UART
•iAP Profile discovery

Kit Contents:

•RN52 Evaluation board
•USB cable
•Two stereo mini-speakers
•Microphone

<< BACK

PIC32 Bluetooth Audio Development Kit

Online Info

The PIC32 Bluetooth® Audio Development Kit provides a comprehensive solution to develop Bluetooth A2DP audio streaming solutions and applications. The board is coupled with two daughter cards: the Bluetooth HCI Radio Daughter Card that demonstrates a low cost Bluetooth implementation and the Audio DAC Daughter Card that demonstrates a high quality 16/24-bit, 32-192 KHz audio conversion/amplification for line or headphones. The kit ships with demo code that enables wireless streaming digital audio from any Bluetooth enabled Smartphone or portable music player or over USB.

Key Features:

•PIC32MX450/470 MCU
•HCI Bluetooth module Daughter Card (QDID Certified Module)
•16/24-bit, 32-192KHz DAC/Amp Daughter Card
•USB Host/Device audio support
•USB Charging
•2 inch color LCD Display
•Headphone/Line Out
•Audio Control function

Bluetooth /USB Audio Software Support for:

•Apple*
•Samsung Audio
•Google/Android AOA Audio
•Bluetooth Audio w/ SBC & AAC Decode
•Bluetooth Stack QDID Certified

*For Apple USB Authenticated applications contact applesupport@microchip.com

PIC32 Bluetooth® Audio Development Kit
(Part # DV320032)

<< BACK

MRF89XAM8A Pictail / Pictail Plus Daughter Card

Online Info

The MRF89XAM8A PICtail/PICtail™ Plus Daughter Board is a demonstration and development daughter board for the 868 MHz radio transceiver module which conforms to the European ETSI standard.
The module is surface mounted to a PICtail/PICtail Plus daughter board that plugs into multiple Microchip demonstration and development boards like the PICDEM PIC18 Explorer Board (DM183032) for 8-bit microcontroller development, or the Explorer 16 Development Board (DM240001) for 16-bit microcontroller development.

Targeted for the MiWi™ Development Environment and other proprietary wireless protocol applications, the MRF89XAM8A is a perfect solution for low-cost, low-power, complete embedded wireless applications. Supporting software stacks and application notes may be downloaded from www.microchip.com/wireless.

Part #AC164138-1

<< BACK

ZENA Wireless Adapter 915 MHz

Online Info

The **ZENA™ Wireless Adapter** is a multi-function Universal Serial Bus (USB) wireless adapter connecting USB-equipped desktop or notebook computers with Microchip wireless products for development or application uses.
As a development tool, the ZENA Wireless Adapter can be used as a protocol analyzer or as a diagnostic tool. It can also be used to connect the computer as a wireless node to the network for application use.

The ZENA Wireless Adapter is capable of performing a variety of functions and each function can be programmed into the adapter using the USB boot loader.

The ZENA Wireless Adapter is preprogrammed with a **MiWi™ Wireless Protocol** Sniffer application. This allows the user to display MiWi Wireless Protocol packets in a graphical format in the Wireless Development Studio.

Upload firmware applications from the **Wireless Development Studio**

<< BACK

Part #AC182015-3

ZENA Wireless Adapter 868 MHz

Online Info

The **ZENA™ Wireless Adapter** is a multi-function Universal Serial Bus (USB) wireless adapter connecting USB-equipped desktop or notebook computers with Microchip wireless products for development or application uses.
As a development tool, the ZENA Wireless Adapter can be used as a protocol analyzer or as a diagnostic tool. It can also be used to connect the computer as a wireless node to the network for application use.

The ZENA Wireless Adapter is capable of performing a variety of functions and each function can be programmed into the adapter using the USB boot loader.

The ZENA Wireless Adapter is preprogrammed with a **MiWi™ Wireless Protocol** Sniffer application. This allows the user to display MiWi Wireless Protocol packets in a graphical format in the Wireless Development Studio.

Upload firmware applications from the **Wireless Development Studio**

Part #AC182015-2

<< BACK

MiWi Demo Kit 868 MHz MRF89XA

Online Info

MiWi Demo Kit – 868 MHz MRF89XA is an easy-to-use evaluation and development platform for 868 MHz applications. This kit includes Microchip's MRF89XAM8A transceiver module and also features Microchip's PIC18 XLP microcontroller family. The kit includes complete hardware needed to rapidly prototype wireless applications. The demonstration kit is pre-programmed with MiWi™ protocol stack and you can find the demo instructions in the user's guide. To learn more about MiWi wireless protocol, please visit www.microchip.com/MiWi. Developers can reprogram or modify the PIC18 MCU Flash memory and develop and debug application code all on the same platform.

<< BACK

MRF89XAM9A Pictail / Pictail Plus Daughter Board

Online Info

The MRF89XAM9A PICtail/PICtail™ Plus Daughter Board is a demonstration and development daughter board for the 915 MHz radio transceiver module which is FCC certified.
The module is surface mounted to a PICtail/PICtail Plus daughter board that plugs into multiple Microchip demonstration and development boards like the PICDEM PIC18 Explorer Board (DM183032) for 8-bit microcontroller development, or the Explorer 16 Development Board (DM240001) for 16-bit or 32-bit microcontroller development.

Targeted for the MiWi™ Development Environment and other proprietary wireless protocol applications, the MRF89XAM9A is a perfect solution for low-cost, low-power, complete embedded wireless applications. Supporting software stacks and application notes may be downloaded from www.microchip.com/wireless.

Part #AC164138-2

<< BACK

MiWi Demo Kit
915 MHz MRF89XA

Online Info

MiWi Demo Kit – 915 MHz MRF89XA is an easy-to-use evaluation and development platform for 868 MHz applications. This kit includes Microchip's MRF89XAM8A transceiver module and also features Microchip's PIC18 XLP microcontroller family. The kit includes complete hardware needed to rapidly prototype wireless applications. The demonstration kit is pre-programmed with MiWi™ protocol stack and you can find the demo instructions in the user's guide. To learn more about MiWi wireless protocol, please visit www.microchip.com/MiWi. Developers can reprogram or modify the PIC18 MCU Flash memory and develop and debug application code all on the same platform.

<< BACK

Remote Control Demo Board with ZENA Wireless Adapter

Online Info

RF based Remote Controls are becoming more prevalent as they enable non line-of-sight and provide bi-directional communication. A high-end remote control typically has a graphics display, a number of keys and a radio to communicate with the target devices.

Microchip's Remote Control Demo Board (Part # DM240315-2) integrates Graphics, mTouch, USB and RF4CE into a single demo. The board demonstrates a remote populated with PIC24FJ256DA210 MCU, 3.5" Graphical TFT LCD with resistive touch screen, capacitive touch keys with plastic overlay, MRF24J40 2.4 GHz transceiver and ZENA™ wireless Adapter.

Remote Control Demo Board with ZENA Wireless Adapter
(Part # DM240315-2)

Part #DM240315-2

<< BACK

ZENA Wireless Adapter 2.4 GHz MRF24J40

Online Info

The **ZENA™ Wireless Adapter** is a multi-function Universal Serial Bus (USB) wireless adapter connecting USB-equipped desktop or notebook computers with Microchip wireless products for development or application uses.
As a development tool, the ZENA Wireless Adapter can be used as a protocol analyzer or as a diagnostic tool. It can also be used to connect the computer as a wireless node to the network for application use.

The ZENA Wireless Adapter is capable of performing a variety of functions and each function can be programmed into the adapter using the USB boot loader.

The ZENA Wireless Adapter is preprogrammed with a **MiWi™ Wireless Protocol** Sniffer application. This allows the user to display MiWi Wireless Protocol packets in a graphical format in the Wireless Development Studio.

Upload firmware applications from the **Wireless Development Studio**

Part #AC182015-1

<< BACK

MiWi Protocol to Wi-Fi Wireless Demo Kit

Online Info

MiWi™ Protocol to Wi-Fi® Wireless Demo kit allows developers to evaluate and experiment with MiWi protocol to Wi-Fi gateway solutions. The kit includes a Wireless Evaluation Board with both the MiWi protoco and Wi-Fi transceivers. The kit also includes two MiWi Demo Boards to create a three node MiWi protocol network. The Wireless Evaluation Boa can be connected to a client device, such as a laptop or a mobile phone using the Wi-Fi network. Based on the application running on the MiWi protocol nodes, the information exchanged can be displayed on the clier device. To learn more about MiWi wireless protocol, please visit www.microchip.com/MiWi & To learn more about WiFi solutions, please visit www.microchip.com/WiFi.

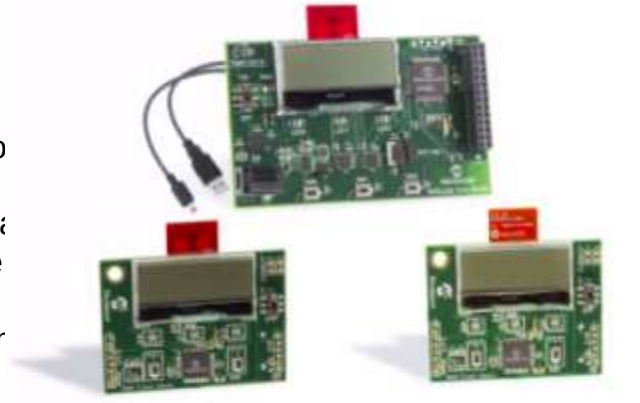

MiWi™ Protocol to Wi-Fi® Wireless Demo Kit
(Part # DM182018)

Demo Software

The demo software can be downloaded from the “Microchip Libraries of Applications” at www.microchip.com/MLA. After installing the MLA, you can find the demo source code at ..**Microchip Solutions \ Combo** folder.

<< BACK

MiWi Demo Kit
2.4 GHz MRF24J40

Online Info

MiWi Demo Kit – 2.4 GHz MRF24J40 is an easy-to-use evaluation and development platform for IEEE 802.15.4 application designers. This kit includes Microchip's MRF24J40MA transceiver module and also features Microchip's PIC18 XLP microcontroller family. The kit includes complete hardware needed to rapidly prototype wireless applications. The demonstration kit is pre-programmed with MiWi™ protocol stack and you can find the demo instructions in the user's guide. To learn more about MiWi wireless protocol, please visit www.microchip.com/MiWi.

Developers can reprogram or modify the PIC18 MCU Flash memory and develop and debug application code all on the same platform.

<< BACK

MRF24J40MA Pictail / PICtail Plus

Online Info

The MRF24J40MA PICtail/PICtail Plus Daughter Board is a demonstration and development daughter board for the agency-certified MRF24J40MA 2.4GHz IEEE Std. 802.15.4™ +0 dBm RF Transceiver Module.

The module is surface-mounted to a PICtail/PICtail Plus daughter board that allows it to plug into multiple Microchip Technology Demonstration and development boards like the PIC18 Explorer Board (DM183022) for 8-bit microcontroller development or the Explorer 16 Development Board (DM240001) 16-bit microcontroller development.

Targeted for ZigBee® and MiWi™ Development Environment wireless protocol applications, the MRF24J40MA is a perfect solution for low-cost, low-power complete embedded wireless PAN applications. Supporting software stacks and application notes may be downloaded from the Microchip website at http://www.microchip.com/wireless

Part #AC164134-1

<< BACK

MRF24J40MD Pictail/PICtail Plus Daughter Board

Online Info

The MRF24J40MD PICtail/PICtail Plus Daughter Board is a demonstration and development daughter board for the MRF24J40MD 2.4GHz IEEE Std. 802.15.4™ 20 DBm RF Transceiver Module. The MRF24J40MD module has an onboard PCB antenna, matching circuitry and it supports the ZigBee®, MiWi™, MiWi P2P and MiWi Pro protocols.

The daughter board can plug into multiple Microchip demonstration and development boards. For example, for 8-bit microcontroller development, use the PIC18 Explorer Board (DM183032) or for 16-bit microcontroller development use the Explorer 16 Development Board (DM240001).

Supporting software stacks and application notes may be downloaded from the Microchip website at www.microchip.com/wireless

Part #AC164134-3

<< BACK

MRF24J40ME Pictail/PICtail Plus Daughter Board

Online Info

The MRF24J40ME PICtail™/PICtail Plus Daughter Board is a demonstration and development daughter board for the MRF24J40ME 2.4 GHz IEEE Std. 802.15.4 RF Transceiver Module with PA/LNA and External Antenna Connector

The daughter board can be plugged into multiple Microchip Technology demonstration and development boards. For example, the daughter board is appropriate for 8-bit microcontroller development using the PIC18 Explorer Board (DM183032) or for 16-bit and 32-bit microcontroller development using the Explorer 16 Development Board (DM240001)

Supporting software stacks and application notes may be downloaded from the Microchip website at www.microchip.com/wireless

Part #AC164143-1

<< BACK

Wireless Network Software

Online Info

Microchip offers three FREE wireless protocol stacks to our customers to aid them in their IEEE 802.15.4 short-range wireless networking development and now we offer the Certified ZigBee PRO protocol stack for those customers needing the advanced features of this new protocol.

ZigBee® PRO
- Certified ZigBee PRO protocol stack
- Part of Microchip's Certified ZigBee PRO Compliant Platform

ZigBee® Residential
- Certified ZigBee 2006 protocol stack
- Part of Microchip's Certified ZigBee Compliant Platform

MiWi™
- Microchip Wireless Proprietary protocol stack
- Based on IEEE 802.15.4 standard
- Small footprint, highly optimized Mesh and Star Network protocol

MiWi™ P2P
- Microchip Wireless Proprietary peer-to-peer protocol stack
- Based on IEEE 802.15.4 standard
- Ultra-Small footprint (3KB), Peer-to-Peer Network protocol

<< BACK

Wireless Network Software

Online Info

Microchip offers three FREE wireless protocol stacks to our customers to aid them in their IEEE 802.15.4 short-range wireless networking development and now we offer the Certified ZigBee PRO protocol stack for those customers needing the advanced features of this new protocol.

ZigBee® PRO
- Certified ZigBee PRO protocol stack
- Part of Microchip's Certified ZigBee PRO Compliant Platform

ZigBee® Residential
- Certified ZigBee 2006 protocol stack
- Part of Microchip's Certified ZigBee Compliant Platform

MiWi™
- Microchip Wireless Proprietary protocol stack
- Based on IEEE 802.15.4 standard
- Small footprint, highly optimized Mesh and Star Network protocol

MiWi™ P2P
- Microchip Wireless Proprietary peer-to-peer protocol stack
- Based on IEEE 802.15.4 standard
- Ultra-Small footprint (3KB), Peer-to-Peer Network protocol

<< BACK

Ethernet PICtail™ Daughter Board

Online Info

The Ethernet PICtail™ Daughter Board is an Ethernet demonstration board for evaluating Microchip Technology's ENC28J60 stand-alone 10 Base-T Ethernet controller. It is an expansion board compatible with a number of PICDEM™ demonstration boards. A complete list of compatible PICDEM™ demonstration boards is available on Microchip's web site.

Products supported

- ENC28J60
- 25LC256

<< BACK

P/N: AC164121

USB EVBs

Online Info

UTC2000
USB-C Controller

EVK-UTC2000

USB57x4
USB3.1 Gen1 Smart Hub Controller

EVB-USB5734

USB46x4
USB2.0 Smart Hub Controller

EVB-USB4604

USB253x
USB2.0 Hub Controller

EVB-USB2534

USB251x
USB2.0 Hub Controller w/BC1.2

EVB-USB2534BC

USB553x
USB3.0 Hub Controller

EVB-USB5537

<< BACK

USB EVBs

Online Info

USB3740
USB2.0 2-Port Switch

EVB-USB3740

USB375x
USB2.0 Port Protection w/Switch

EVB-USB3750

USB333x
USB2.0 PHY (Mobile)

EVB-USB3330

USB264x USB2.0 Flash Media
Controller w/Hub

EVB-USB2642

USB334x
USB2.0 PHY (General)

EVB-USB3340

MCP2200 USB to RS232 Demo Board

Online Info

The MCP2200EV-VCP is a USB to RS232 development and evaluation board for the MCP2200 USB to UART device. The board allows for easy demonstration and evaluation of the MCP2200. The accompanying software allows the special device features to be configured and controlled.

The board is powered from USB. Each I/O has an associated test point. In addition, two I/O are connected to LEDs which are used to indicate USB to UART traffic when the associated pins are configured as TxLED and RxLED pins respectively.

Products supported

- MCP2200

<< BACK

P/N: MCP2200EV-VCP

MCP2200 Breakout Module

Online Info

The MCP2200 Breakout Module is a development and evaluation platform for the USB-to-UART (Universal Serial Bus-to-Universal Asynchronous Receiver/Transmitter) serial converter MCP2200 device. The module is comprised of a single Dual In-Line Package (DIP) form-factor board.

Products supported

- MCP2200

<< BACK

P/N:ADM00393

MCP2210 Breakout Module

Online Info

The MCP2210 Breakout Module can be used with either the MCP2210 Motherboard or as a standalone USB to SPI (Master) bridge module. The breakout board provides all the needed signals in order to assist the user in building their own boards using the MCP2210. The MCP2210 Utility software allows custom device configuration. In addition, a DLL package is also available in order to allow development of custom software utilizing the MCP2210.

Products supported

- MCP2210

<< BACK

P/N:ADM00419

MCP2210 Evaluation Kit

Online Info

The MCP2210 Evaluation Kit is a development and evaluation platform for the MCP2210 device. The MCP2210 Motherboard is designed to work together with the MCP2210 Breakout Board (included). The motherboard provides the test points needed for measurements and it also contains the following SPI slave chips:

- MCP23S08 – 8 bit I/O expander
- MCP3204 – 4 channel, 12-bit ADC
- 25LC02 – 2kbit EEPROM
- TC77 – temperature sensor

All the mentioned chips are SPI slaves controlled by the MCP2210. The MCP2210 Eval Board Demo software can be used to demonstrate the MCP2210 as a USB-to-SPI (Master) device and allow I/O control. In addition, the MCP2210 Utility software allows custom device configuration. A DLL package is also available in order to allow development of custom software using the MCP2210.

Products supported

- MCP2210
- MCP3204
- TC77
- 25LC02

<< BACK

P/N: ADM00421

MCP2221 Breakout Module

Online Info

The MCP2221 Breakout Module is a development and evaluation platform comprised of a single DIP form factor board. The provided supporting software demonstrates the capabilities of the MCP2221 device as a USB-to-UART/I2C/SMBus protocol converter. Additionally, these tools provide simple access for I/O control and the ability to establish custom device configuration. Custom tools can also be created through the use of the provided DLL package.

Features:

- UART Tx and Rx signals
- I2C/SMBus clock and data lines (SCL and SDA)
- Four GP lines, configurable for GPIO, dedicated or alternate function operation
- User-selectable (jumper) power supply of 3.3V or 5V (up to 500 mA)
- DIP form factor
- PICkit™ Serial Analyzer header — used for UART and I2C/SMBus communication only

Products supported

- MCP2221

<< BACK

P/N: ADM00559

RE46C190 Demo Board

Online Info

The demo board is a complete stand-alone smoke detector application with a smoke chamber emulator. The demo board allows evaluation of all the functions of the RE46C190. Key test points of the device are available at the bottom edge of the demo board.
The demo board is designed for battery operation using a CR123A battery or can be operated using a power supply.
The RE46C190 application circuit is on the right side of the board by the battery holder and piezo horn and the smoke chamber emulator is on the left. The smoke chamber emulator can be disconnected from the application circuit and a photo smoke chamber or its components can be connected to the demo board.

Products supported

- RE46C190
- RE46C191

<< BACK

P/N:ADM00344

MTS2916A Demo Board

Online Info

The MTS2916A Dual Full-Bridge Stepper Motor Driver Evaluation Board demonstrates the capabilities of the MTS2916A to control both windings of a bipolar stepper motor. The board also demonstrates the capabilities of the MTS62C19A, which has the same functionality, but different pin assignments. A PIC16F883 is utilized for motor control processing.

This evaluation board incorporates features through the implementation of push button switches and a variable speed input potentiometer to exercise a stepper motor in Full-Step, Half-Step, Modified Half-Step and Microstepping modes. LEDs indicate a binary representation of which mode has been selected. The evaluation board and the stepper motor can be powered from a single power input J1 (7 VDC to 12 VDC) with jumper JP2 installed. For higher motor voltages, make sure JP2 is not installed, and connect VLOAD at J4. Numerous test points have been designed into the board to allow easy access.

Products supported

- MTS2916A

<< BACK

P/N: ADM00308

MTD6505 3-Phase BLDC Sensorless Demo Board

Online Info

The MTD6505 3-Phase BLDC Sensorless Fan Controller Demonstration Board allows the control and monitoring of the MTD6505 device using PC software connected to the board via a USB connection. The included board software provides several features including V_{DD} control and monitoring, pulse-width modulation (PWM) control, speed and current consumption monitoring. It also allows selecting the R_{PROG} resistor value for fan fitting.

Products supported

- MTD6505

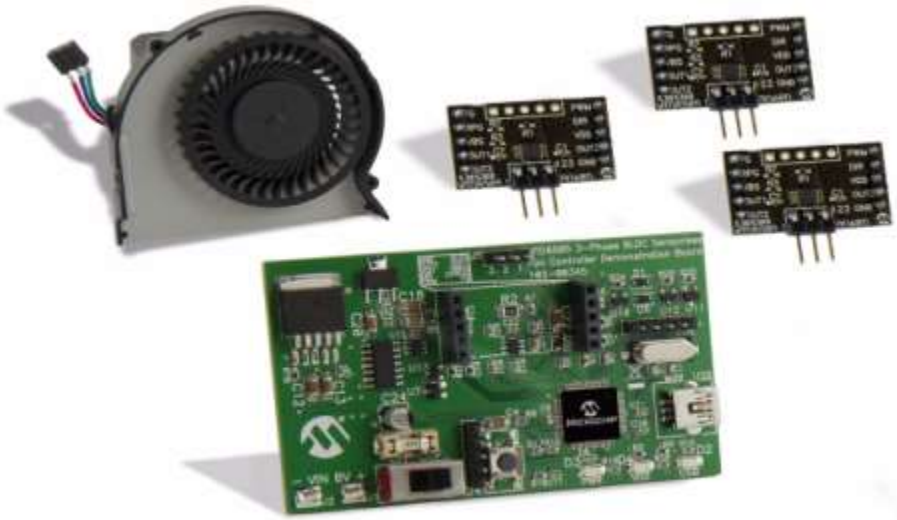

MTD6505 3 Phase BLDC Sensorless Fan Controller Demonstration Board
(Part # ADM00345)

<< BACK

P/N: ADM00345

MCP8024 BLDC Motor Driver Evaluation Board

Online Info

The MCP8024 TQFP BLDC Motor Driver Evaluation Board demonstrates Microchip's MCP8024 3-Phase Brushless DC (BLDC) Motor Gate Driver in a BLDC motor drive application. The MCP8024 contains the high-side and low-side drivers for external N-channel MOSFETs. A dsPIC33FJ32MC204 motor control processor is used to supply the PWM inputs to the MCP8024 as well as handle the high-speed Analog-To-Digital Conversion (ADC) required for 40 KHz PWM operation. The MCP8024 onboard UART is used to configure the MCP8024 and to send fault information to the dsPIC controller. The evaluation board firmware uses a 6-step trapezoidal drive control algorithm to demonstrate the MCP8024 capabilities.

Features:

- Input Operating Voltage Range: +7.0V to +28V
- 500 mA (max) of gate drive current for external N-Channel MOSFETs
- Drives up to a 15 Amp BLDC motor
- 750 mW Buck Regulator with resistor programmable output voltage
- RESET momentary contact switch
- Two Spare user programmable momentary contact switches
- 100 pin dsPIC PIM header for use with MA330017 compatible PIMs
- PICkit 3,Real Ice, and ICD3 debugger interfaces
- Speed control potentiometer
- Terminal block for 5V or 12V Hall effect sensors
- SPI and I2C headers for user communications use

P/N: ADM00557

Products supported

- MCP8024
- dsPIC33FJ32MC204

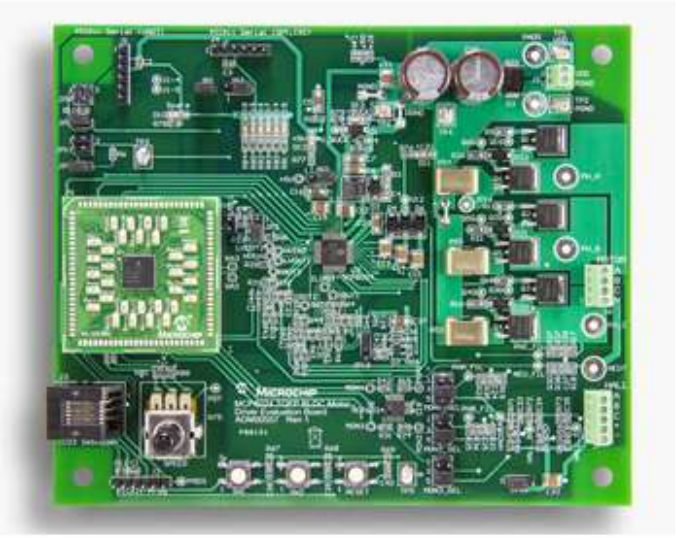

<< BACK

MCP8063 12V 3-Phase BLDC Sensorless Fan Controller Kit

Online Info

The MCP8063 12V 3-Phase BLDC Sensorless Fan Controller Demonstration Kit allows the control and monitoring of Microchip 12V fan driver devices, such as the MCP8063 or MTD6501, using a PC software connected to the demo board via a USB connection. The MCP8063 12V 3-Phase BLDC Sensorless Fan Controller Demonstration Board software provides several features, such as fan driver power supply control and monitoring, pulse-width modulation (PWM) control, and speed and current consumption monitoring. It also allows automatic application testing.

Features:

- PC software allows controlling and monitoring the MCP8063 3-Phase Fan Controller via USB connection
- VDD voltage control and IDD current measurement
- PWM control for speed setting
- FG measurement for speed monitoring
- Automated test measurement

Products supported

- MCP8026

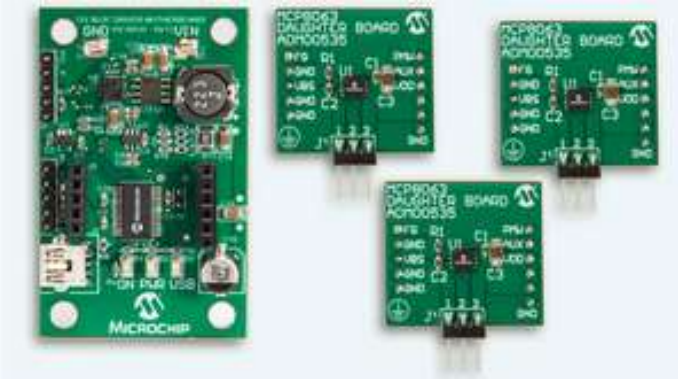

<< BACK

P/N: ADM00575

MCP8025 BLDC Motor Driver Evaluation Board

Online Info

The MCP8025 TQFP BLDC Motor Driver Evaluation Board demonstrates Microchip's 3-Phase Brushless DC (BLDC) Motor Gate Driver with Power Module, MCP8025, used in a BLDC motor drive application. When used in conjunction with a microcontroller, the MCP8025 will provide the necessary drive signals to drive for a 3-Phase BLDC motor.
The MCP8025 contains the high-side and low-side drivers for external N-channel MOSFETs. A dsPIC33EP256MC504 processor is used to supply the PWM inputs to the MCP8025 as well as handle the high-speed Analog-To-Digital Conversion (ADC) required for 50 kHz PWM operation.

Features:

- Input Operating Voltage Range: +6.0V to +19V
- Drives up to a 15A BLDC motor
- ON/OFF momentary contact switch
- Reset momentary contact switch
- Spare user-programmable momentary contact switch
- PWM signal LED indicators
- PICkit 3 and MPLAB ICD 3 debugger interfaces
- Speed control potentiometer
- Terminal block for 5V and 12V Hall-effect sensors
- LIN terminal block for user communications use
- Complete "C" source code (provided on the board web page)

P/N: ADM00600

Products supported

- MCP8025
- dsPIC33EP256MC504

MCP8025 TQFP BLDC Motor Driver Evaluation Board
(Part # ADM00600)

<< BACK

ATA6826-DK Demo Board

Online Info

The application board allows loads to be easily adapted via its row connector pins. Design software controls its SPI interface via the PC parallel port. The board contains everything needed to start operation, including a link cable to PC 25-lead 1:1, application note and datasheet.

Products supported

- ATA6826C

<< BACK

P/N: ATA6826-DK

ATA6831-DK Demo Board

Online Info

Application board that allows loads to be easily adapted via its row connector pins. Design software controls its SPI interface via the PC parallel port. The board contains everything needed to start operation, including a link cable to PC 25-lead 1:1, application note and datasheet.

Products supported

- ATA6831C
- ATA6832C

<< BACK

P/N: ATA6831-DK

ATA6832-DK Demo Board

Online Info

The development board contains an Atmel triple half bridge driver (ATA6832C), Atmel ATmega88 microcontroller, and ATA6625 LIN SBC as a voltage regulator. Only high-temperature components populate this board. The board also includes a BLDC motor control kit with BLDC motor and a power supply cable with banana plugs. The BLDC motor control is fully integrated from the signal generation to the full BLDC motor control chain

Products supported

- ATA6831C
- ATA6832C

<< BACK

P/N: ATA6832-DK

ATA6836-DK Demo Board

Online Info

PC-controlled application board for an Atmel ATA6836C in the QFN5x5 package. Using the application board, loads can easily be adapted via row connector pins. The design software controls the application board's SPI interface via the PC parallel port. The design kits include everything needed to start operation: a link cable to PC 25-lead 1:1, corresponding application notes, and datasheet.

Products supported

- ATA6836C
- ATA6838C

<< BACK

P/N: ATA6836-DK

ATA6823-DK Demo Board

Online Info

The development kit contains a main board with an Atmel H-bridge gate driver (ATA6823), external FETs, and DC motor.
The attached controller board is equipped with an Atmel ATmega88 microcontroller and LCD display for user interface purpose.

Products supported

- ATA6823C
- ATA6824C

<< BACK

P/N: ATA6823-DK

ATA6824-DK Demo Board

Online Info

A high-temperature H-bridge motor driver designed for DC motor control applications in automotive high temperature environments. With a maximum junction temperature of 200°C, this driver is suitable for applications with an ambient temperature up to 150°C. The IC includes four driver stages to control four external power MOSFETs. A microcontroller ATmega88 provides the direction signal and the PWM frequency.

The application is set up for operating in 150°C ambient environme
e.g. EGR exhaust gas recirculation.

Products supported

- ATA6823C
- ATA6824C

<< BACK

P/N: ATA6824-DK

MCP7941x PICtail™ Plus Daughter Board

Online Info

The MCP7941x RTCC PICtailTM Plus Daughter Board demonstrates the features and abilities of the MCP7941x and MCP7940x Real-Time Clock/Calendar family in standard development platforms. By designing this daughter board with the PICtail Plus, PICtail and PICkit™ Serial connectors, it will operate with the Explorer 16 Development Board, the PICDEM PIC18 Explorer Board, the XLP16-bit Development Board and the PICkit Serial Analyzer tool. Also included is a 3V coin cell battery that can be installed in the coin cell holder for backup power.

Products supported

- MCP79410
- MCP79411
- MCP79412
- MCP79400
- MCP79401
- MCP79402
- MCP7940N

<< BACK

P/N: AC164140

MCP795xx PICtail™ Plus Daughter Board

Online Info

The MCP795XX RTCC PICtail™ Plus Daughter Board demonstrates the features and abilities of the MCP795xx SPI Real-Time Clock/Calendar (RTCC) family in standard development platforms. This daughter board will support the full featured 14-pin MCP795W2x and MCP795W1x devices along with the mid-range 10-pin MCP7952x and MCP7951x devices. By designing this daughter board with both PICtail and PICtail Plus connectors, it will operate with the Explorer 16 Development Board and the PICDEM PIC18 Explorer Board. Also included is a 3V coin cell battery for backup power to the RTCC.

Products supported

- MCP7951x
- MCP7952x
- MCP795W1x
- MCP795W2x

<< BACK

P/N: AC164147

5 and 6-pin SOT-23 Eval Board

Online Info

The Voltage Supervisor SOT-23-5/6 Evaluation Board allows the system designer to quickly evaluate the operation of Microchip Technology's Voltage Supervisors and Voltage Detectors in the SOT-23-5 (5-pin SOT-23) or SOT-23-6 (6-pin SOT023) packages. This board has been made generic so that other devices in the SOT-23-5 and SOT-23-6 packages may be supported with this board.

The Voltage Supervisor SOT-23-5/6 Evaluation Board PCB supports the four different SOT-23-6 pinouts (which also supports compatible SOT-23-5 footprints) and one SOT-23-5 footprint.

Products supported

- 5-pin SOT-23 packages
- 6-pin SOT-23 packages

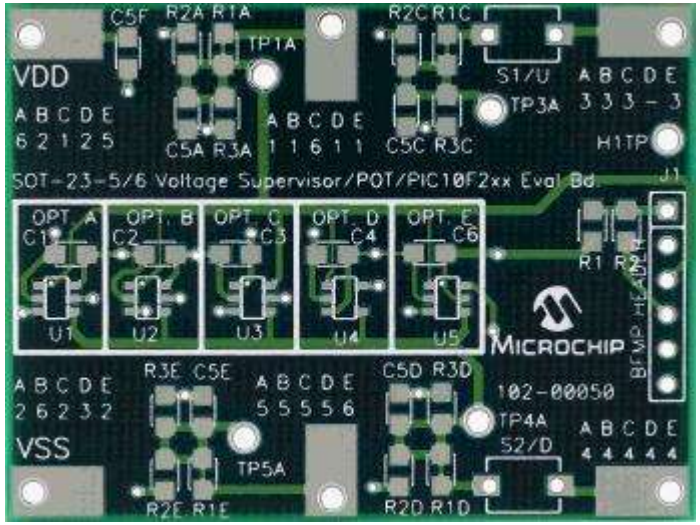

<< BACK

P/N: VSUPEV2

5 and 6-pin SOT-23 Eval Board

Online Info

The Voltage Supervisor SOT-23-5/6 Evaluation Board allows the system designer to quickly evaluate the operation of Microchip Technology's Voltage Supervisors and Voltage Detectors in the SOT-23-5 (5-pin SOT-23) or SOT-23-6 (6-pin SOT023) packages. This board has been made generic so that other devices in the SOT-23-5 and SOT-23-6 packages may be supported with this board.

The Voltage Supervisor SOT-23-5/6 Evaluation Board PCB supports the four different SOT-23-6 pinouts (which also supports compatible SOT-23-5 footprints) and one SOT-23-5 footprint.

Products supported

- 5-pin SOT-23 packages
- 6-pin SOT-23 packages

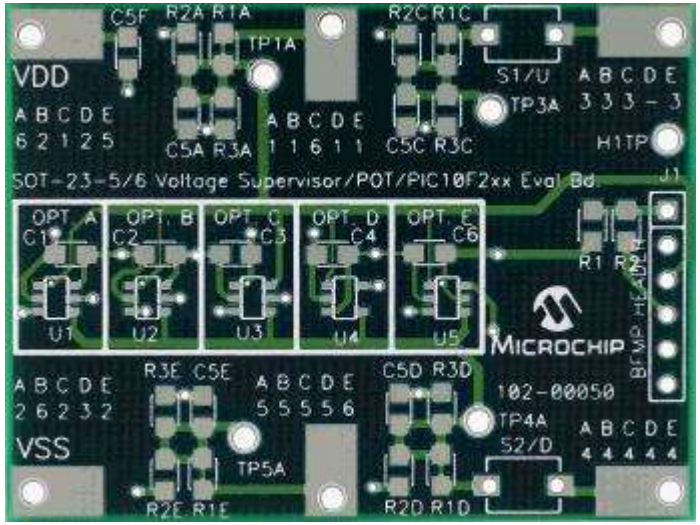

<< BACK

P/N: VSUPEV2

3-pin SOT-23 Eval Board

Online Info

The Voltage Supervisor SOT-23 Evaluation Board allows the system designer to quickly evaluate the operation of Microchip Technology's Voltage Supervisors and Voltage Detectors in the SOT-23-3 (3-pin SOT-23) package.
The Voltage Supervisor SOT-23 Evaluation Board PCB supports the four different SOT-23-3 pinouts for the product family. This board has been made generic so that other devices in the SOT-23-3 package may be supported with this board.

Products supported

- 3-pin SOT-23 packages

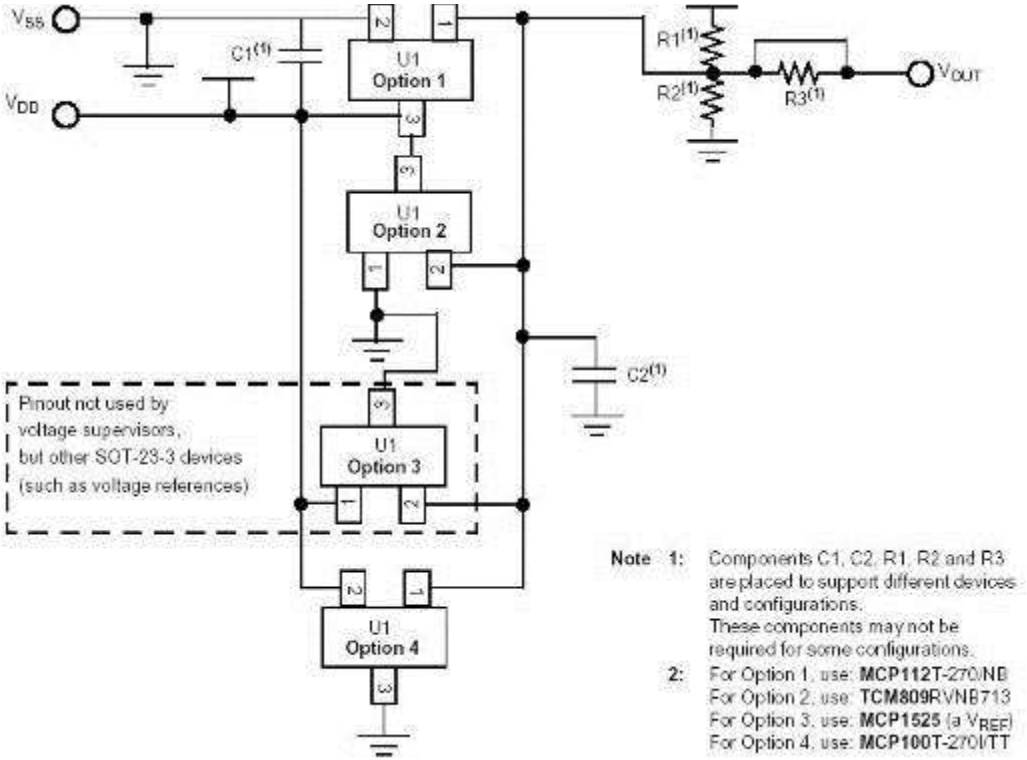

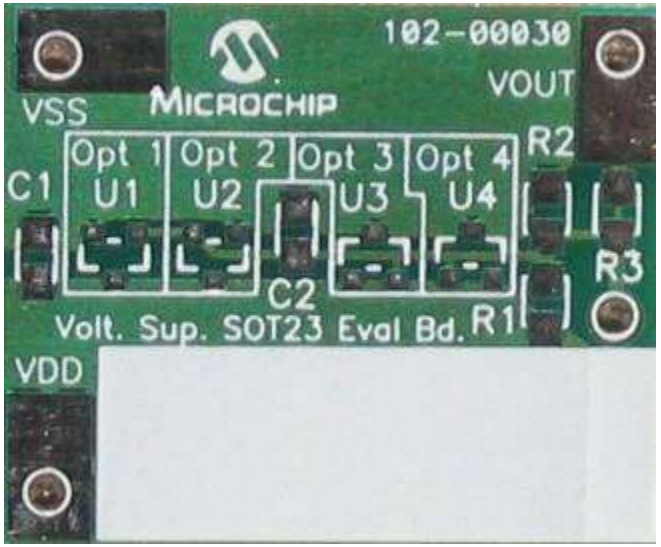

<< BACK

P/N: VSUPEV

8-pin SOIC/MSOP/ TSSOP/PDIP Eval Board

Online Info

The 8-Pin SOIC/MSOP/TSSOP/DIP Evaluation Board allows the system designer to quickly evaluate the operation of Microchip Technology's devices in any of the following 8-pin packages: SOIC, MSOP, DIP, TSSOP

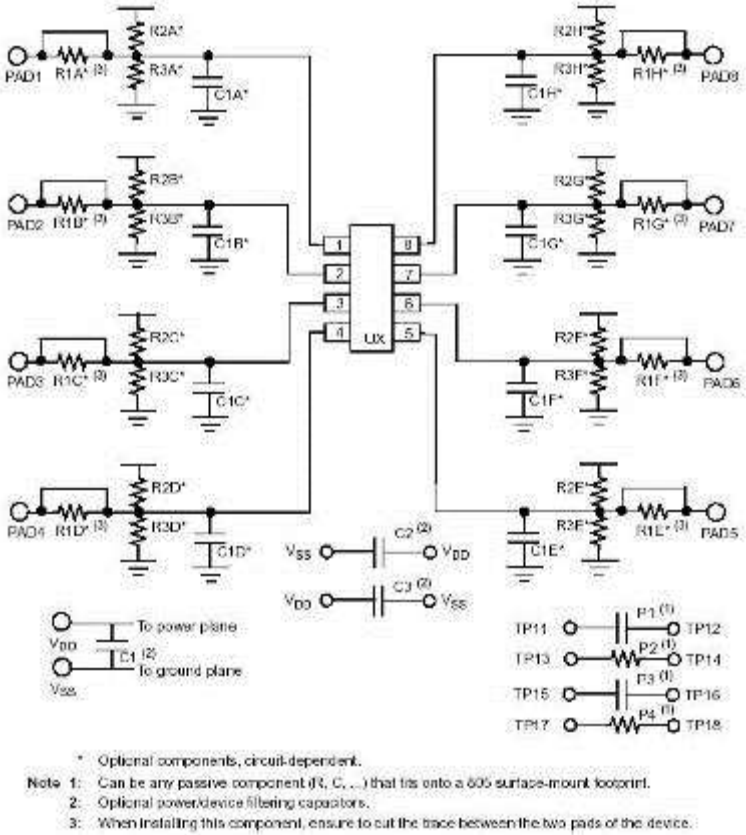

Products supported

- 8-pin SOIC packages
- 8-pin MSOP packages
- 8-pin TSSOP packages
- 8-pin PDIP packages

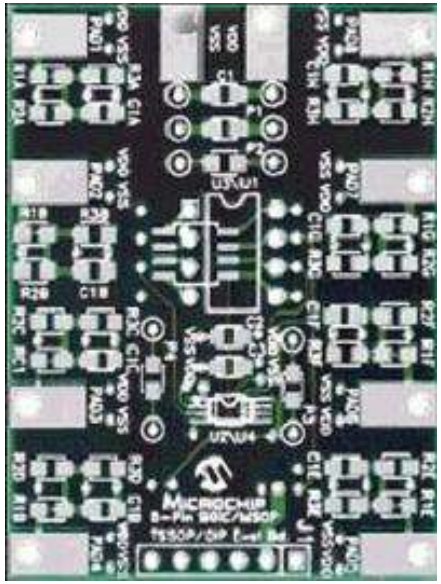

<< BACK

P/N: SOIC8EV

8-pin SOIC/MSOP/ TSSOP/PDIP Eval Board

Online Info

The 8-Pin SOIC/MSOP/TSSOP/DIP Evaluation Board allows the system designer to quickly evaluate the operation of Microchip Technology's devices in any of the following 8-pin packages: SOIC, MSOP, DIP, TSSOP

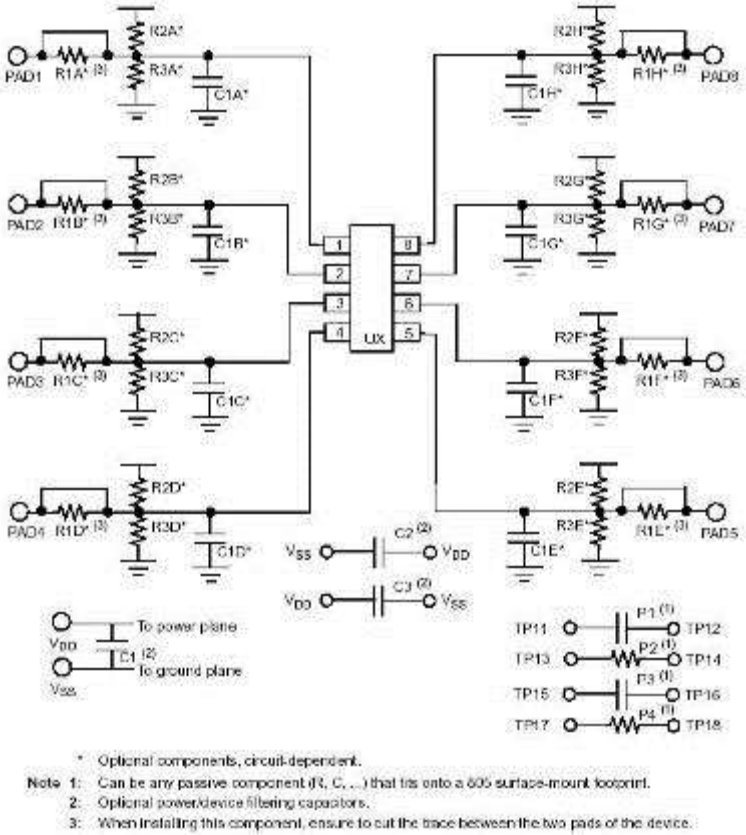

Products supported

- 8-pin SOIC packages
- 8-pin MSOP packages
- 8-pin TSSOP packages
- 8-pin PDIP packages

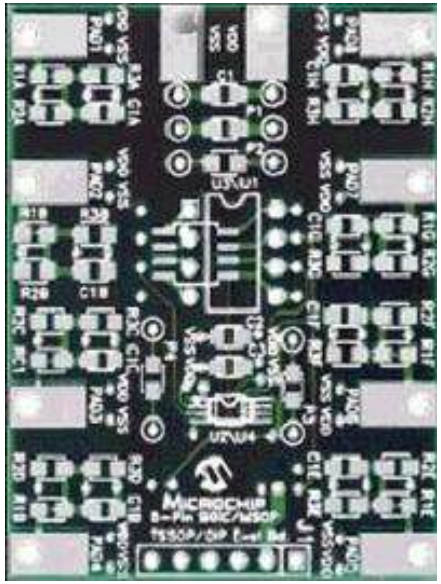

<< BACK

P/N: SOIC8EV

14-pin SOIC/TSSOP/PDIP Eval Board

Online Info

The 14-Pin SOIC/TSSOP/DIP Evaluation Board allows the system designer to quickly evaluate the operation of Microchip Technology's devices in any of the following 14-pin packages: SOIC, DIP, TSSOP

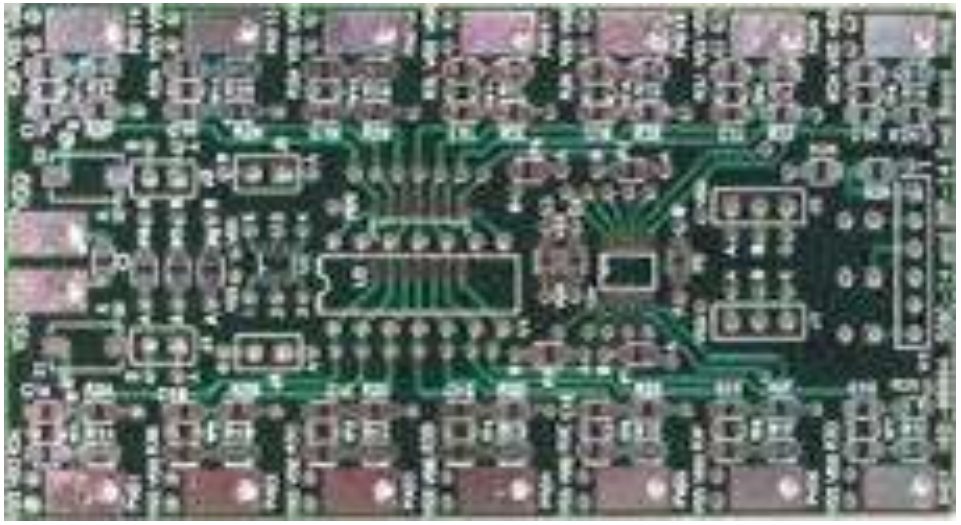

Products supported

- 14-pin SOIC packages
- 14-pin TSSOP packages
- 14-pin PDIP packages

<< BACK

P/N: SOIC14EV

14-pin SOIC/TSSOP/PDIP Eval Board

Online Info

The 14-Pin SOIC/TSSOP/DIP Evaluation Board allows the system designer to quickly evaluate the operation of Microchip Technology's devices in any of the following 14-pin packages: SOIC, DIP, TSSOP

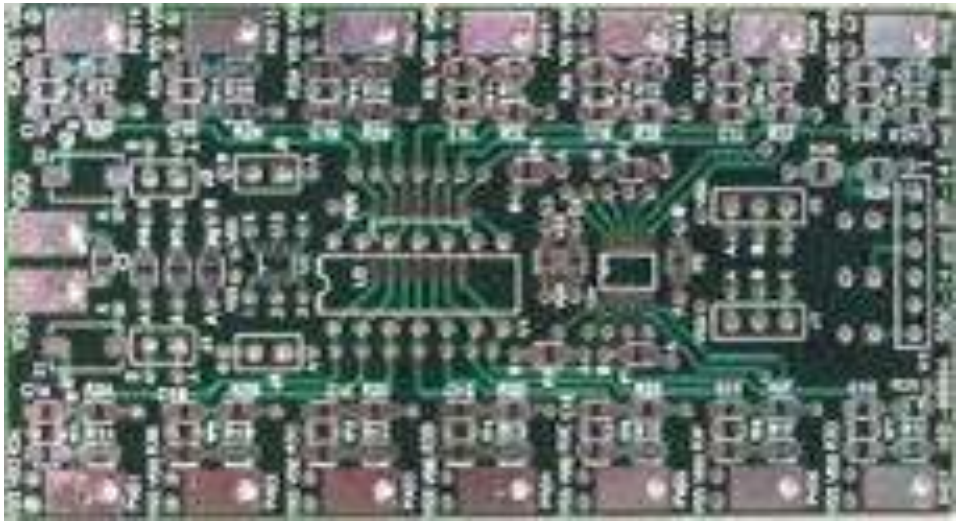

Products supported

- 14-pin SOIC packages
- 14-pin TSSOP packages
- 14-pin PDIP packages

<< BACK

P/N: SOIC14EV

ClockWorks Configurator

Online Info

ClockWorks Configurator is an easy-to-use online tool that allows users to create an orderable part number and get samples within few weeks.
Simply go to http://clockworks.microchip.com/Timing and start configuring your **oscillators and clock generators**.

Features & benefits:

- User-friendly interface helps you choose the right device for your application
- Provides instant datasheets
- Dashboard supports sample and design tracking
- Performs search by part number, design ID or sample ID

TUTORIAL VIDEO

Products supported

- Oscillators
- Clock Generators

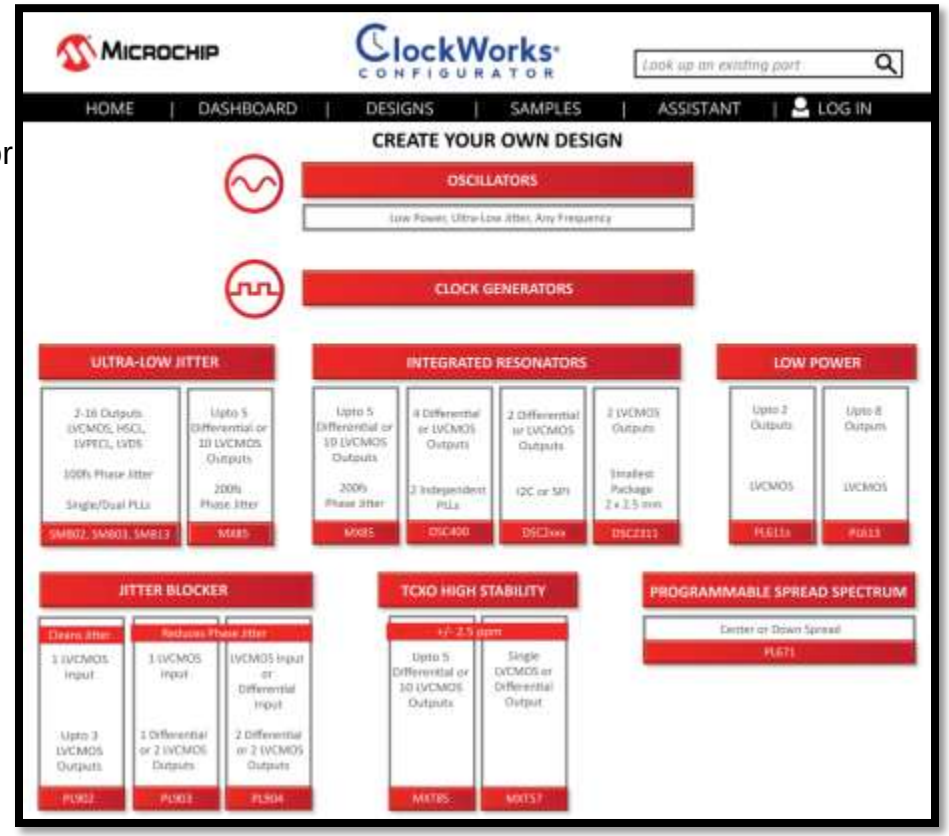

ClockWorks CONFIGURATOR

<< BACK

TimeFlash Field Programming Kit

Online Info

The TimeFlash programmer allows users to rapidly program Microchip's **field programmable MEMS oscillator** to a custom frequency in seconds, minimizing design time by enabling fast prototyping and testing. Our MEMS oscillators are available in industry standard packages that are drop-in replacements to standard crystal oscillators.

Features and Benefits:

- Custom frequencies in seconds with immediate design verification
- Supports all Microchip MEMS oscillator package sizes
- Supports CMOS, LVPECL, LVDS, and HCSL output types
- Easy to use interface with auto software update

DEMO VIDEO

Products supported

- MEMS Oscillators

<< BACK

Analog & Interface Overview: Providing Complete Solutions

Product Tree

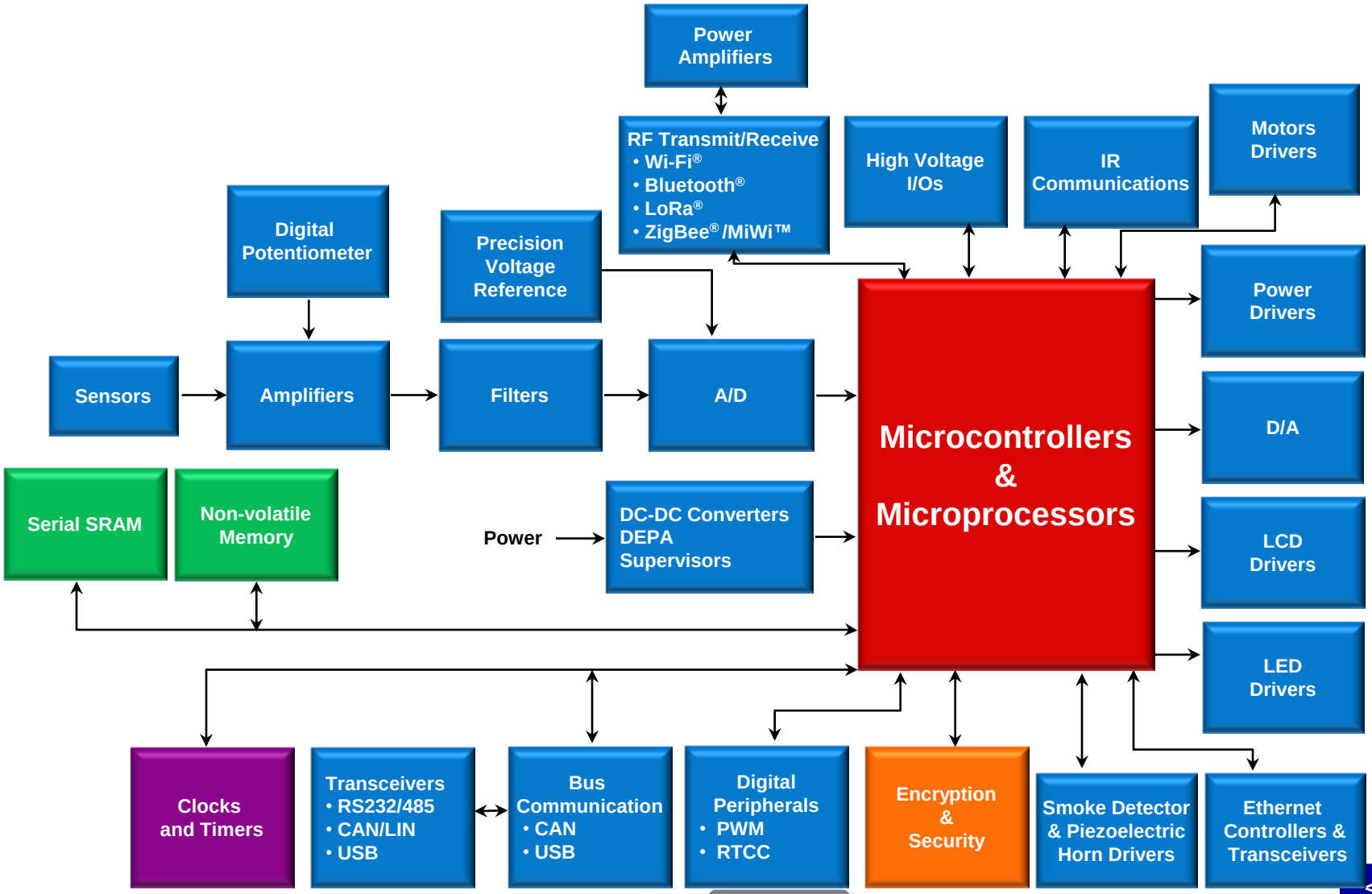

NEXT >>

<< BACK

Analog & Interface: Product Portfolio Growth

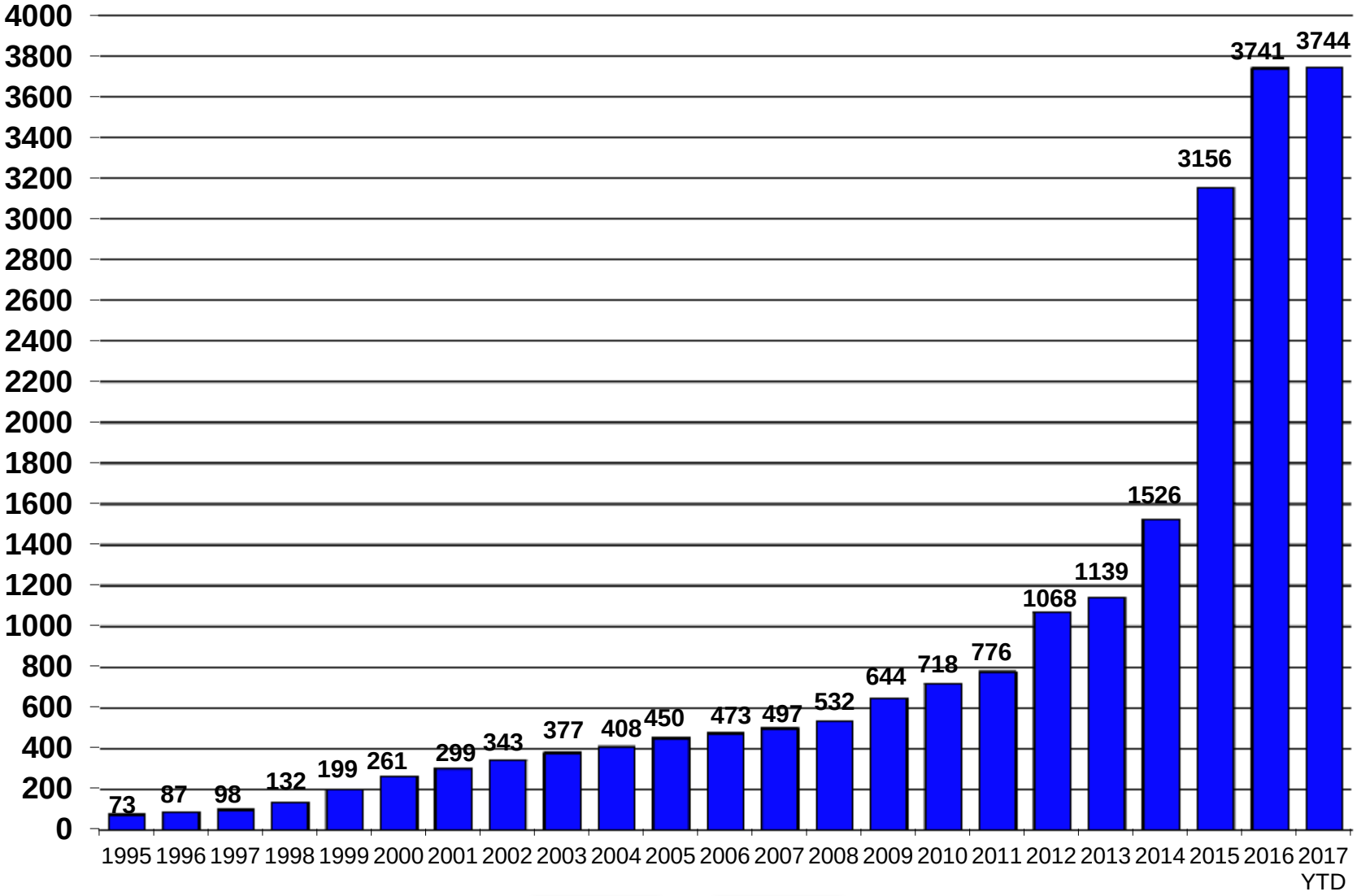

Proprietary Enabling Technology

Low power CMOS process
Lower power than competing processes

Understanding of customer needs
Only necessary features are included, unnecessary power consuming features are excluded

Simplified designs
Proprietary designs reduce circuit complexity for more performance and less power

Expertise on multiple process nodes/advanced lithographies
Combination of internal and external foundries utilizes the latest technologies

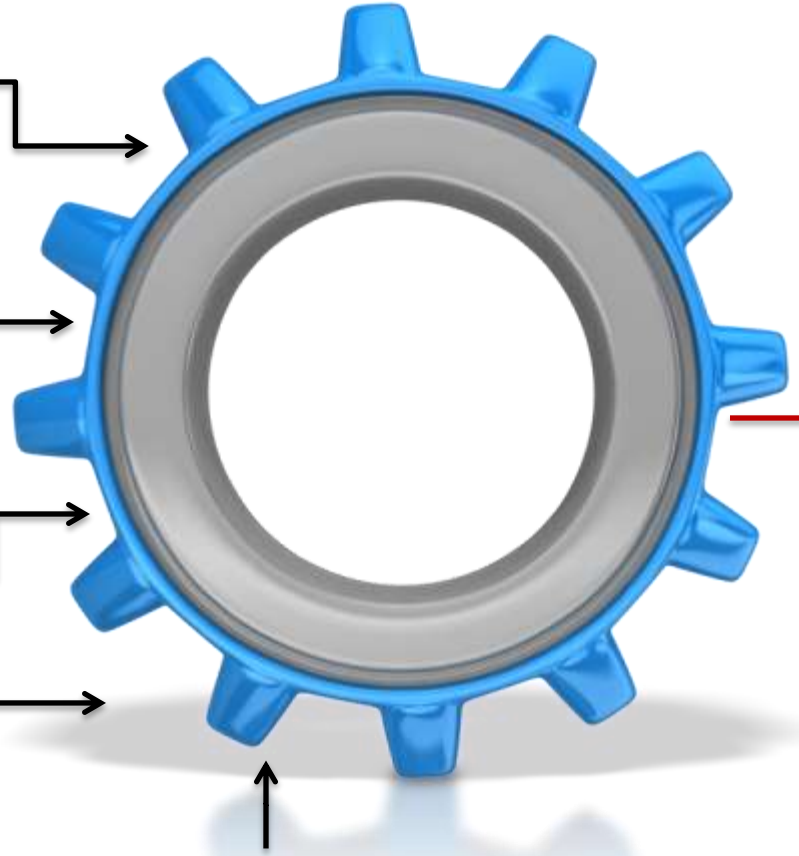

High voltage technology
Offline and automotive capabilities

A Complete Analog Solution

Focus on Applications

Appliance
- Beverage Machine
- Robot Vacuum Cleaner

Automotive
- HVAC
- In-Vehicle Network Communication
- LED Control Module (Exterior Lighting)
- LED Control Module (Interior Ambient)
- Smart Actuators in Turbo Charger
- USB Breakout Box

Consumer
- Power Tools (Professional, Household)
- Set-Top/PVR Boxes
- Weigh Scales
- Wireless Handsets
- 2D Barcode Scanner
- Industrial Control Panel

Computing
- Computing (Main board)
- Ethernet Switch
- Servers

Home Alarm
- Security Systems (Security Panel, Keypad, Sensors)

Home – CO & Fire Detection
- 10 Yr Low Voltage
- Addressable Smoke Detectors
- CO Detector
- CO Companion
- Low Cost Smoke Detectors

Lighting
- LED lighting

Medical Equipment
- Blood Glucose Meter
- Digital Thermometer
- ECG/EKG System
- Medical Ultrasound

Motor Control/Drive
- High Power
- High Integration

Power Supply
- Power Supplies
- Distributed Point-of-Load Power Architecture
- Power Monitoring
- Digital Power

Temperature Sensing Solutions
- Thermocouple, Digital & Analog Out, Fan Controllers

Utility Metering
- Energy Meter
- Metering Concentrator

Signal Chain Generic Blk. Dia.

<< BACK
NEXT >>
<< BACK

Microchip Analog Key Attributes

- **Flexibility to customers**
  - Using both internal and external fabs allows flexibility and safety for our customers
  - Our knowledge of NVM makes analog easier to manufacture and offers flexibility
- **Analog for digital systems**
  - Easy to use development tools
  - Standard digital serial interfaces
- **Design-in support**

Microchip Analog Key Attributes

- **Low power/low voltage**
  - Op amps with lowest power for a given gain bandwidth: 450nA/1.4V/9kHz
  - 0.65V start-up voltage switching regulator
- **Robustness**
  - MOSFET drivers lead the industry in latch-up immunity/stability

Microchip Analog Key Attributes

- **Integration**
  - Motor drivers with integrated LIN transceiver, comparator, voltage regulators, op amps
  - DEPA integrates MCU, analog controller, drivers
- **Innovation**
  - Zero-Drift and mCal calibration technology
  - Sinusoidal motor drivers
  - Proprietary algorithms for low power high accuracy ADC and high-speed ADC families
  - DACs with non-volatile memory

Microchip Analog Key Attributes

- **Space savings**
  - ADCs, op amps, comparators, supervisors and LDOs in SC70
  - ADCs, temperature sensors in SOT-23
  - Battery chargers, LDOs in 2x2 DFN
- **Accuracy**
  - Advanced architectures to optimize accuracy and repeatability

Thermal Management Solutions

- **Offer a complete portfolio of high-accuracy, space-saving, low-power products**
  - Offer great cost-to-performance ratio
  - Low voltage operation and low current consumption
  - DC fan speed control/DC fan fault detection
  - Over-, under-temperature monitoring
  - Multi-point temp measurement
  - Thermal calibration

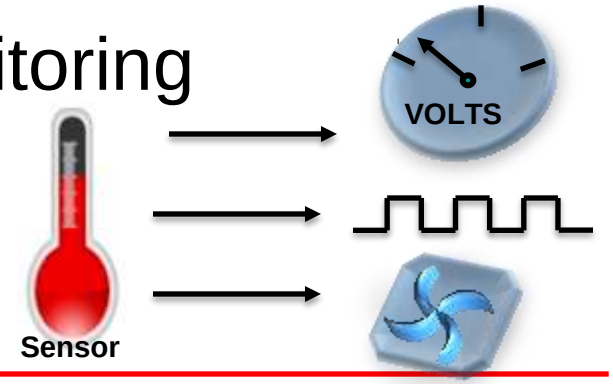

Power Management Solutions

- **Microchip's winning attributes**
  - High-voltage product offering
  - Built-in intelligence
  - Optimized, high-efficiency power conversion
  - Low power, low startup voltage regulators
  - Small footprint
  - Stability & robustness

Battery Charger | Switching Regulator | Controller | Voltage Regulator | Charge Pump | System Supervisor

Signal Chain Solutions

- **Provide complete system solutions for sensor signal conditioning & data acquisition applications, while focusing on:**
  - Integration: reduced component count
  - Low power: low operating current and voltage
  - Precision: high resolution, low offset voltage
  - Low system cost: affordable pricing
  - Small footprints

Signal Chain Solutions (contd.)

- **Microchip's winning attributes**
  - Lower cost to performance ratio
  - Lowest supply current op amps for a given gain-bandwidth product
  - High accuracy delta-sigma ADCs and high-speed pipelined ADCs
  - Broad digital potentiometer portfolio

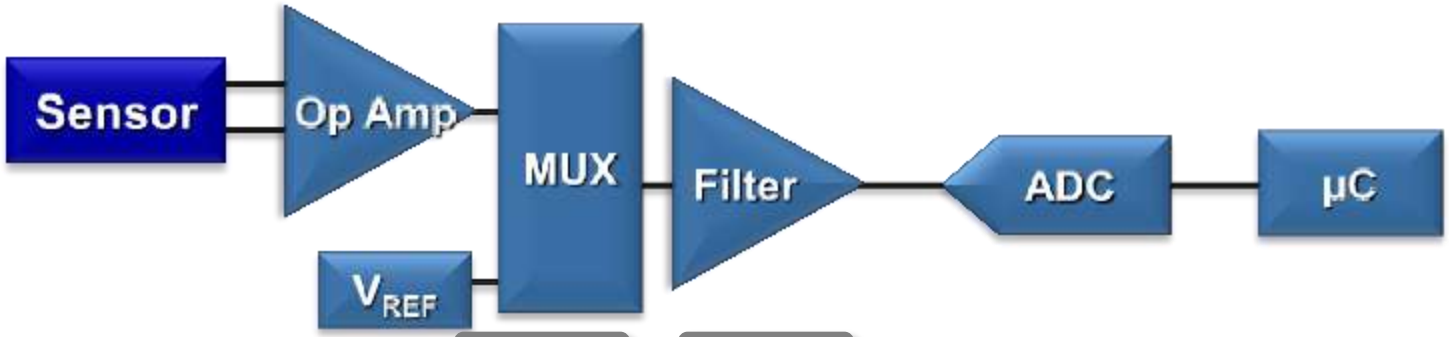

Interface Solutions

- **Enabling flexible connectivity options within automotive, industrial, consumer and many other industries**
  - CAN, CAN FD, LIN transceivers and system basis chips
  - Ethernet, RF, USB bridge devices, GPIO expanders

- **Enable the implementation of wireless/ wire-line communication via inexpensive & easy-to-use products**

RF Front-End Solutions

- **Addresses a wide range of applications**
  - Wi-Fi® operating at 2.4 GHz and 5 GHz, including the new 11ac high data rate standard
  - Bluetooth® and ZigBee® at 2.4 GHz
  - 3G/4G Femtocells at 2.1-2.3 GHz

Wi-Fi® Solutions

- High power for longer distance
- Lower DC power consumption
- Smaller footprint, thin package, and low external component count
- Highly integrated Front-End Modules (FEM)
- Design-in support

Safety & Security Solutions

- **Microchip's winning attributes**

  - Ionization smoke detectors
  - Photoelectric smoke detectors
  - 3V operation, Li Ion or 2 AA battery operation
  - Electronic calibration
  - Horn drivers meet loudness requirements
  - Piezo horn drivers
    - Piezo alarm system, industrial and consumer
    - CO detectors, MCU smoke detectors
    - E-bike horns

Motor Drive and Control Solutions

- **Portfolio offering includes**
  - PIC® MCU and dsPIC® DSC companion 3-phase gate drivers
  - Dual H-bridge motor drivers
  - Highly Integrated 3-phase motor drivers
- **Total solution provider with PIC® MCU and dsPIC® DSC**
  - Lowest supply current Vs. major competitors
  - Applications in Industrial & Security, Automotive & Medical, Appliances

Strong Applications Support

Application Centers of Excellence (ACE) for key applications

- ACE Center for Energy Measurement (Romania)
- ACE Center for Interface Solutions (Chandler, AZ, USA)
- ACE Center for Motor Solutions (Endwell, NY, USA)
- ACE Center for Power Supplies (Endwell, NY, USA)
- ACE Center for Smoke Detectors (Norristown, PA, USA)

Worldwide Technical Support Centers

The only non-commissioned sales team in the semiconductor industry

<< BACK NEXT >>

Global Development Centers

Worldwide Manufacturing

Proven Analog Expertise

Product Tree

Broad Portfolio

- Over 3,100 products in > 30 product lines
- Strong **low-power** portfolio
- High-voltage products
- Industry-standard wired and wireless protocols
- Smart integration
- Small, space-saving packages

Technology

- Proprietary low-power IP
- Advanced architectures
- Expertise on multiple process nodes
- Deep sub-micron
- High-voltage capability
- Internal and external fabs
- Truly **world-class manufacturing** excellence

Support

- Extensive demo/eval boards
- Reference designs
- Online design support centers
- On-location technical training
- Webinars
- Instructional videos
- Worldwide technical support

<< BACK

<< BACK

End Equipment

Product Tree

Appliance
- Beverage Machine
- Robot Vacuum Cleaner

Automotive
- HVAC
- Infotainment
- In-Vehicle Network Communication
- LED Control Module (Exterior Lighting)
- LED Control Module (Interior Ambient)
- Smart Actuators in Turbo Charger
- USB Breakout Box

Computing
- Compact Keyboard
- Computing (Main board)
- Ethernet Switch
- Servers

Consumer
- Fitness Equipment
- Power Tools (Professional, Household)
- Set-Top/PVR Boxes
- Weigh Scale
- Wireless Handsets
- 2D Barcode Scanner
- Industrial Control Panel

Home Detection
- 10 Yr Low Voltage Smoke Detector
- Low Cost Smoke Detectors
- Addressable Smoke Detector
- CO Detector
- CO Companion
- Gas Detector

Home Security
- Security Systems (Security Panel, Keypad, Sensors)

Lighting
- LED lighting

Medical Equipment
- Blood Glucose Meter
- Digital Thermometer
- ECG/EKG System
- Medical Ultrasound

Motor Control/Drive
- High Power
- High Integration

Signal Chain Generic Blk. Dia.

Power Supply
- Power Supplies
- Distributed Point-of-Load Power Architecture
- Power Monitoring
- Digital Power

Temperature Sensing Solutions
- Thermocouple, Digital & Analog Out, Fan Controllers

UAV
- UAV

Utility Metering
- Energy Meter
- Metering Concentrator

<< BACK

Microchip Analog Products for Motor Control Applications

<< BACK to CONTENTS
NEXT

Microchip's Winning Attributes

- Industry standard footprint – Dual H-bridge motor drivers
- Lowest supply current Vs. major competitors!
- Integrated sensorless sinusoidal algorithm – 3-phase BLDC fan drivers (3mm x 3mm DFN, TDFN, UDFN packages)
- Total solution provider with PIC MCU and dsPIC DSC

NEXT

Microchip's Winning Attributes

- One of the first & leading suppliers in MOSFET driver and temperature sensor products
- Large offering of DC-DC converters and Resets covering needed voltages
- RR-I/O op amps reduce design concerns
- Attach sell with PICmicro, frequently used
- Great lead times and customer support
- Growing portfolio of Motor Driver ICs

High Integration Motor Control/ Drive

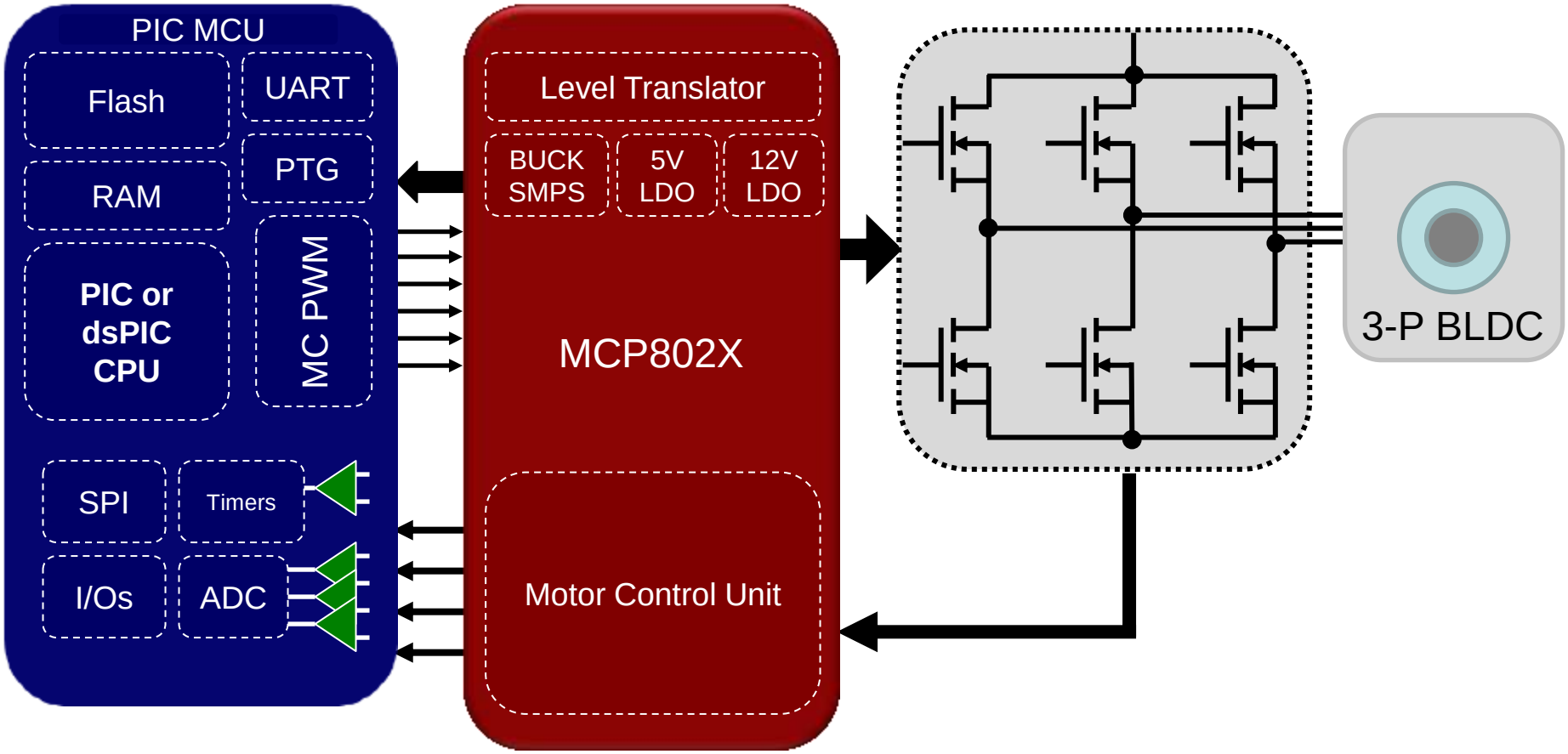

High Power Motor Control/Drive
<< BACK to CONTENTS

Motor Control MOSFET Gate Driver

- **Function: power MCU/DSC, sense current, drive MOSFETs and provide housekeeping functions**

Popular Products	Description	Product Web Page
MCP8024/6	The three integrated op-amps allows MCP8024/6 provide motor current feedback to broad range of MCUs/DSCs in FOC applications. Both devices operates up to 28V and withstand 48V voltage spikes.	Click here
MCP8025	MCP8025 offers six N-Ch MOSFET drivers to drive MOSFETs efficiently. With zero-crossing output , a standalone op-amp and voltage regulators, it simplifies BLDC design and	Click here

PIC MCU and dsPIC DSC

- **Function: coordinating all the control and monitor functions - the brain of the system**
- **Popular products: dsPIC33EPMC, dsPIC33FJMC, PIC16F182X, 178X, 75X, 15XX, 193X**
- **Attributes:**
  - Upwards of 32MHz internal OSC
  - 4 channel Programmable Switch Mode Controller (PSMC)
  - Integrated high performance comparators, op-amp, 10/12 bit ADC, 5/8/9 bit DAC, CCP, COG, NCO, CLC
  - Slope compensation
  - 256 bytes of EEPROM
  - Available in various packages

NEXT

PIC16F178x
Key Features

- Enhanced Mid-Range core (EMR)
- Flash Program Memory with self read/write capability
- Data EEPROM
- Low Power Internal 32kHz/32MHz osc.
- Integrated Temperature Indicator
- Up to 14-Channel 10bit / 12bit ADC w/Vref
- Up to (4) PSMC (Programmable Switch Mode Controller)
- Extended Watchdog Timer (EWDT)

NEXT

PIC16F178x
Key Features (contd.)

- Up to (4) High Performance Comparators with selectable Voltage Reference
- Up to (3) Operation Amplifiers with rail-to-rail input/output
- Up to (3) CCP (Capture, Compare, PWM)
- (1) 8-bit DAC (Digital to Analog Converter)
- (3) 5-bit DAC (Digital to Analog Converter) (PIC16F1788/9 ONLY)
- (1) MI^{2}C, (1) SPI, (1) EUSART w/auto baud
- (2) 8-bit Timer (TMR0/TMR2) & (1) 16-bit Timer (TMR1)

NEXT

Application Example: Sensorless 3-Φ BLDC Motor

- *High Efficiency closed-loop control enabling higher RPMs*
- *Cost effective integration with BOM reductions*
  - *OpAmp, Voltage Reference, reduced size of inductors, capacitors, & resistors*

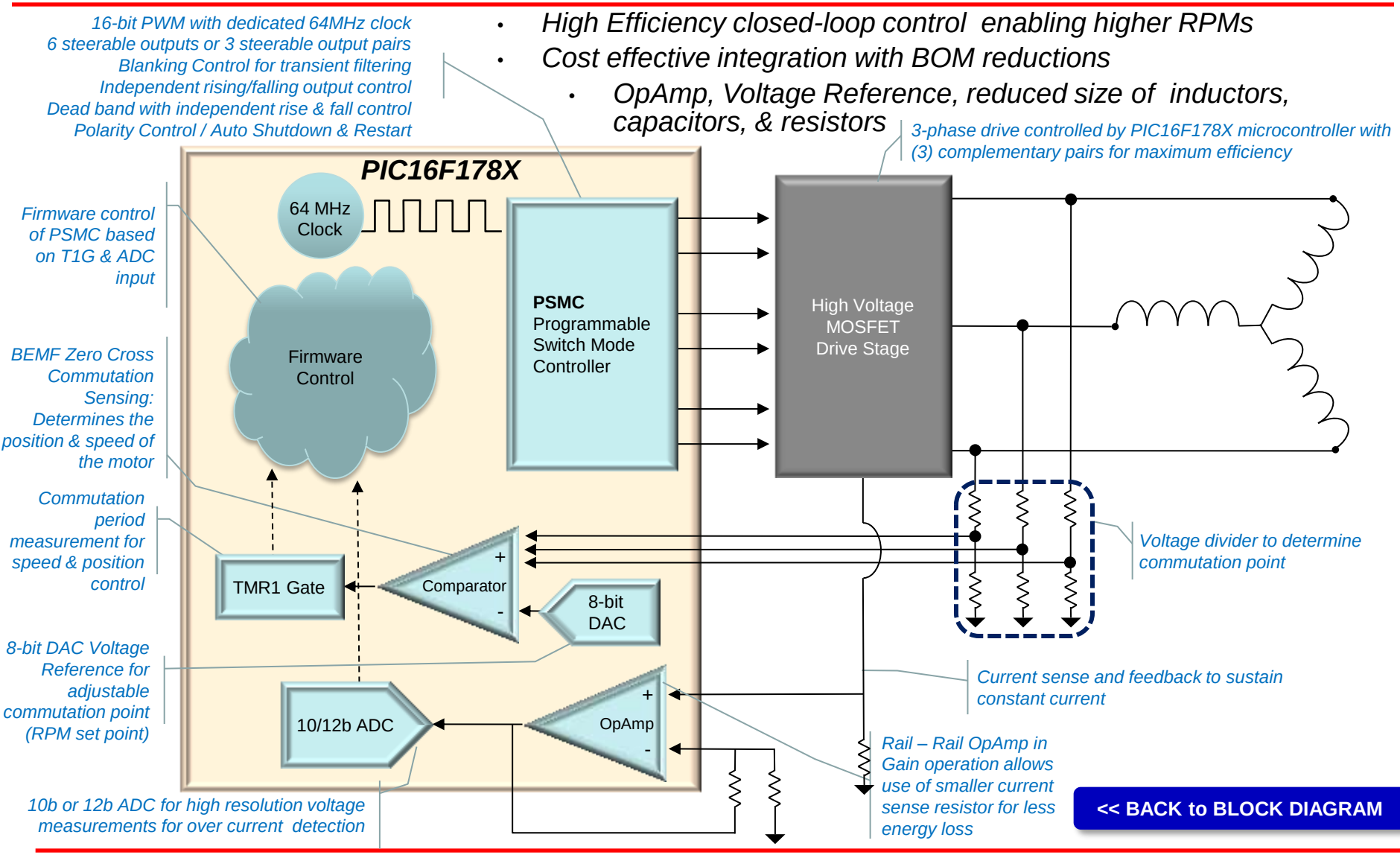

<< BACK to BLOCK DIAGRAM

High Power Motor Control/ Drive

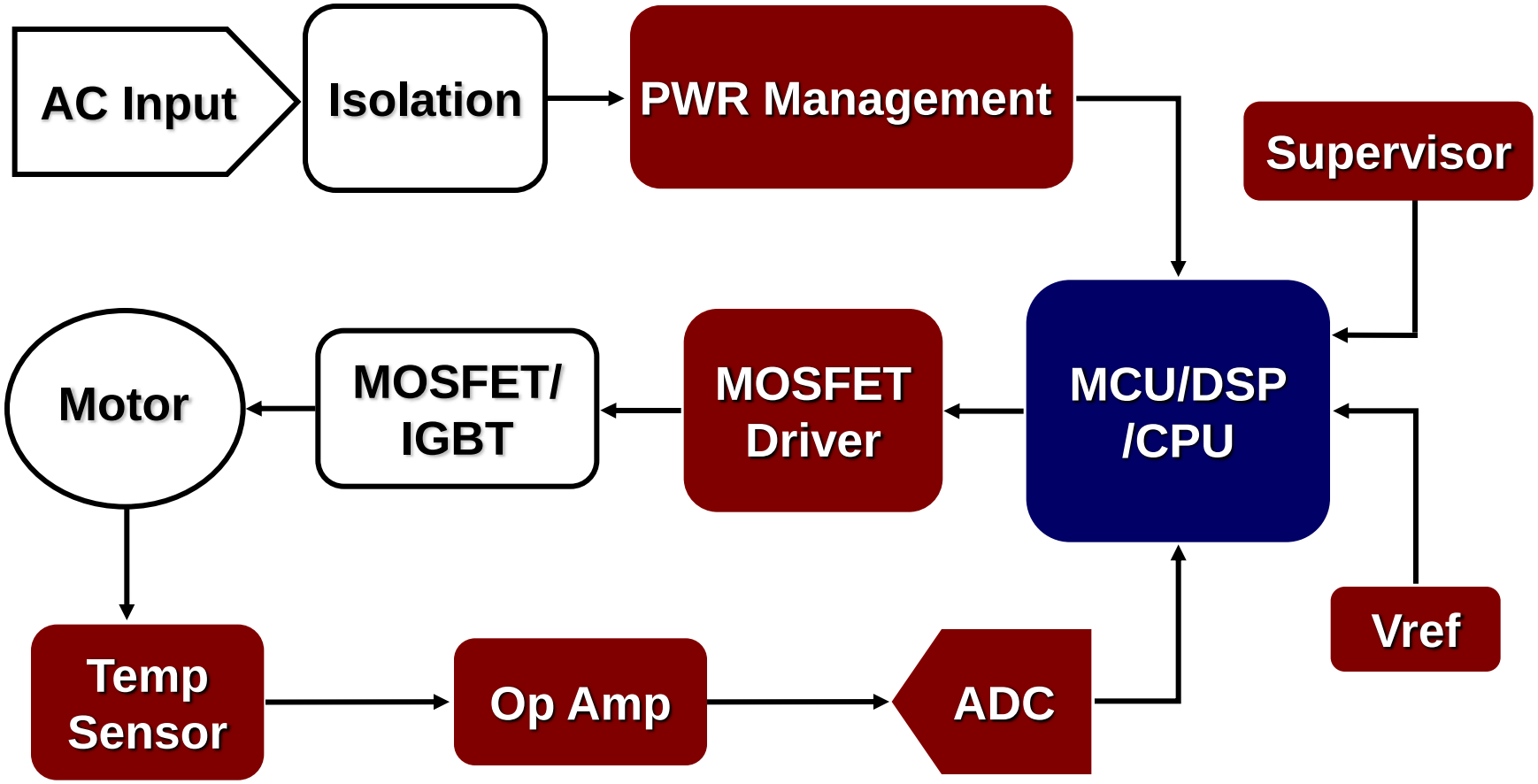

High Integration Motor Control/Drive
<< BACK to CONTENTS

Temperature Sensors

- **Function: Measuring and providing Temperature information**

Popular Products	Description	Product Web Page
MCP9808 Digital temperature sensor	The MCP9808 converts temperatures between -20°C and +100°C to a digital word with ±0.5°C (max.) accuracy	Click here
MCP9700 Linear Active Thermistor™ ICs	The output voltage of this device is directly proportional to measured temperature. The MCP9700 can accurately measure temperature from -40C to +150C with the output calibrated to a slope of 10mV/°C and has a DC offset of 500mV.	Click here

Winning Attributes

<< BACK to BLOCK DIAGRAM

Temperature Sensors Winning Attributes

- **Attributes:**
  - Small SC70, SOT-23 and DFN leadless packages
  - Very low operating current: 35 to 250µA (typ)
  - Very low shutdown current: 1µA (max)
  - High temp accuracy: ±0.25°C
  - Simple operation: no need for external components
  - Analog and digital (SPI™, I2C™, SMBus™) devices
  - High temperature resolution

BACK

Low-Power LDOs

- **Function: providing regulated, low-noise supply voltages for the system**

Popular Products	Description	Product Web Page
MCP1700 6V LDO	The MCP1700 can source up to 250mA of current with an extremely low input-output voltage differential of 178mV at 250mA. with the low current consumption of only	Click here
MIC5239 30V LDO	The MIC5239 is a low quiescent current, µCap low-dropout regulator. With a maximum operating input voltage of 30V and a quiescent current of 23µA, it is ideal for supplying keep-alive power in systems with high voltage batteries.	Click here

Winning Attributes

<< BACK to BLOCK DIAGRAM

Low-Power LDOs Winning Attributes

- **Attributes:**
  - Extremely low operating current: as low as 1µA
  - High output voltage accuracy
  - Stability with ceramic capacitors
  - Wide range of output voltage options
  - Space-saving SC70 and SOT-23 packages
  - Wide range of features: shutdown mode

BACK

RESET Monitors

- **Function:** System supervisor circuits designed to monitor VCC in digital systems and provide a reset signal to the host processor when needed

Popular Products	Description	Product Web Page
TCM809	The reset output is driven active within 20 µsec of VCC falling through the reset voltage threshold. Reset is maintained active for a minimum of 140msec after VCC rises above the reset threshold.	Click here
MCP1xx	The MCP1xx are a family of voltage supervisory devices which also operates as protection from brown-out conditions when the supply voltage drops below a safe operating level	Click here

Winning Attributes

<< BACK to BLOCK DIAGRAM

RESET Monitors Winning Attributes

- **Attributes:**
  - Tiny SOT-23 and SC-70 packages
  - Very low operating current: as low as 1µA (max)
  - High threshold voltage accuracy: ±2.8% (max)
  - V_{DD} transient immunity
  - Many available options: push-pull output, open-drain output and internal pull-up resistor

BACK

Half Bridge MOSFET Drivers

- **Function: driving the high power devices (MOSFETs in synch. Buck configuration**

Popular Products	Description	Product Web Page
MIC4608 600V Half Bridge MOSFET Driver	The MIC4608 is a 600V Half Bridge IGBT or MOSFET driver. The MIC4608 features a 450ns propagation delay including a 200ns input filtering time to prevent unwanted pulses. The low-side and high-side gate drivers are independently controlled (with shoot thru protection) or controlled with a single PWM signal.	Click here
MIC4605 85V Half Bridge MOSFET Driver With Adaptive Dead Time (ADT)	The MIC4605 is an 85V half-bridge MOSFET driver that features adaptive-dead-time and shoot-through protection. The adaptive-dead-time circuitry actively monitors the half-bridge outputs to minimize the time between high-side and low-side MOSFET transitions, thus maximizing power efficiency.	Click here

Winning Attributes

<< BACK to BLOCK DIAGRAM

Synchronous Buck MOSFET Drivers

- **MIC4608 Attributes:**
  - Drives Up to 600V high-side and low-side N-Channel MOSFETs or IGBTs with independent inputs or with a single PWM signal
  - Shoot thru protection

- **MIC4605 Attributes:**
  - Drives Up to 85V high-side and low-side N-Channel MOSFETs with independent inputs or with a single PWM signal
  - Adaptive Dead Time and Shoot thru protection

BACK

Operational Amplifiers

- **Function: buffering and filtering sensor feedback**

Popular Products	Description	Product Web Page
MCP6004	The MCP6004 is a quad general purpose op amp offering rail-to-rail input and output over the 1.8 to 6V operating range. This amplifier has a typical GBWP of 1 MHz with typical quiescent current of 100 microamperes.	Click here
MCP6H04	MCP6H04 has a wide supply voltage range of 3.5V to 16V and rail-to-rail output operation. This device has a gain bandwidth product of 1.2 MHz (typical), while only drawing 135 µA/amplifier (typical) of quiescent current.	Click here
MCP6294	MCP6294 provide wide bandwidth of 10 MHz Gain Bandwidth Product. This family also operates from a single supply voltage as low as 2.4V to 6V, while drawing 1 mA (typical) quiescent current.	Click here

Winning Attributes

<< BACK to BLOCK DIAGRAM

Operational Amplifiers

- **Attributes:**
  - Small SC-70, TDFN and SOT-23 packages
  - GBWP: 9 kHz to 60MHz
  - Excellent operating current-to-GBWP ratio
  - Mostly rail-to-rail inputs and outputs
  - Offset voltage: as low as 2µV (MCP6V0x)
  - Chip Select capability for power savings

BACK

Analog-to-Digital Converters

- **Function: converting analog feedback signals from motor to digital signals for MCU**

Popular Products	Description	Product Web Page
MCP3221	The MCP3221 is a 12-bit SAR A/D converter. Available in the SOT-23 package, the MCP3221 provides a low max. conversion current and standby current of 250 µA and 1 µA respectively. Communication to the MCP3221 is performed using a 2-wire I2C™ Compatible interface. The MCP3221 runs on a single supply voltage range of 2.7 V to 5.5 V.	Click here
MCP3201	The MCP3201 12-bit Analog-to-Digital Converter (ADC) combines high performance and low power consumption in a small package, making it ideal for embedded control applications. The MCP3201 features SAR architecture and a SPI serial interface, allowing 12-bit ADC capability to be added to any PIC® microcontroller. The MCP3201 features 100k samples/second, 1 input channel, low power consumption (5nA typical standby, 400µA max. active).	Click here

Winning Attributes

<< BACK to BLOCK DIAGRAM

Analog-to-Digital Converters

- **SAR ADC Attributes:**
  - Resolution: 8 to 13 bits
  - Max sampling rate: up to 200 ksps
  - Linearity: ±1LSB DNL, ±1LSB INL
  - Current consumption: 175 to 500µA (max.)
  - Single supply voltage: 2.7V to 5.5V
  - Small packages: SOT-23 and MSOP

BACK

Voltage References

- **Function: providing the system with an accurate analog voltage for comparison (needed for ADC)**

Popular Products	Description	Product Web Page
MCP1525/41	MCP1525/41 is a low power, high precision voltage reference. It provides a precise output voltage of 4.096V which is then compared to other voltages in the system.	Click here
MCP1501	The MCP1501 is a high-precision buffered voltage reference with an initial accuracy of 0.10% and is available in 8 voltage options. The MCP1501 is a low-drift bandgap-based reference and uses chopper-based amplifiers which significantly reduces the drift and provides high current output.	Click here

Winning Attributes

<< BACK to BLOCK DIAGRAM

Voltage References

- **Attributes:**
  - 1.2V (TC1070), 2.5V or 4.096V output
  - Initial accuracy: ±1% (max)
  - Temperature coefficient: 50ppm/°C (max)
  - Output current: ±2mA
  - Operating current: 100µA (max)
  - Industrial temperature range: -40°C to +85°C
  - SOT-23 and TO-92 packages

BACK

PIC MCU and dsPIC DSC

- **Function: coordinating all the control and monitor functions - the brain of the system**
- **Popular products: dsPIC33EPMC, dsPIC33FJMC, PIC16F182X, 178X, 75X, 15XX, 193X**
- **Attributes:**
  - Upwards of 32MHz internal OSC
  - 4 channel Programmable Switch Mode Controller (PSMC)
  - Integrated high performance comparators, op-amp, 10/12 bit ADC, 5/8/9 bit DAC, CCP, COG, NCO, CLC
  - Slope compensation
  - 256 bytes of EEPROM
  - Available in various packages

NEXT

PIC16F178x
Key Features

- Enhanced Mid-Range core (EMR)
- Flash Program Memory with self read/write capability
- Data EEPROM
- Low Power Internal 32kHz/32MHz osc.
- Integrated Temperature Indicator
- Up to 14-Channel 10bit / 12bit ADC w/Vref
- Up to (4) PSMC (Programmable Switch Mode Controller)
- Extended Watchdog Timer (EWDT)

NEXT

PIC16F178x
Key Features (contd.)

- Up to (4) High Performance Comparators with selectable Voltage Reference
- Up to (3) Operation Amplifiers with rail-to-rail input/output
- Up to (3) CCP (Capture, Compare, PWM)
- (1) 8-bit DAC (Digital to Analog Converter)
- (3) 5-bit DAC (Digital to Analog Converter) (PIC16F1788/9 ONLY)
- (1) MI^{2}C, (1) SPI, (1) EUSART w/auto baud
- (2) 8-bit Timer (TMR0/TMR2) & (1) 16-bit Timer (TMR1)

NEXT

Application Example: Sensorless 3-Phase BLDC Motor

- *High Efficiency closed-loop control enabling higher RPMs*
- *Cost effective integration with BOM reductions*
  - *OpAmp, Voltage Reference, reduced size of inductors, capacitors, & resistors*

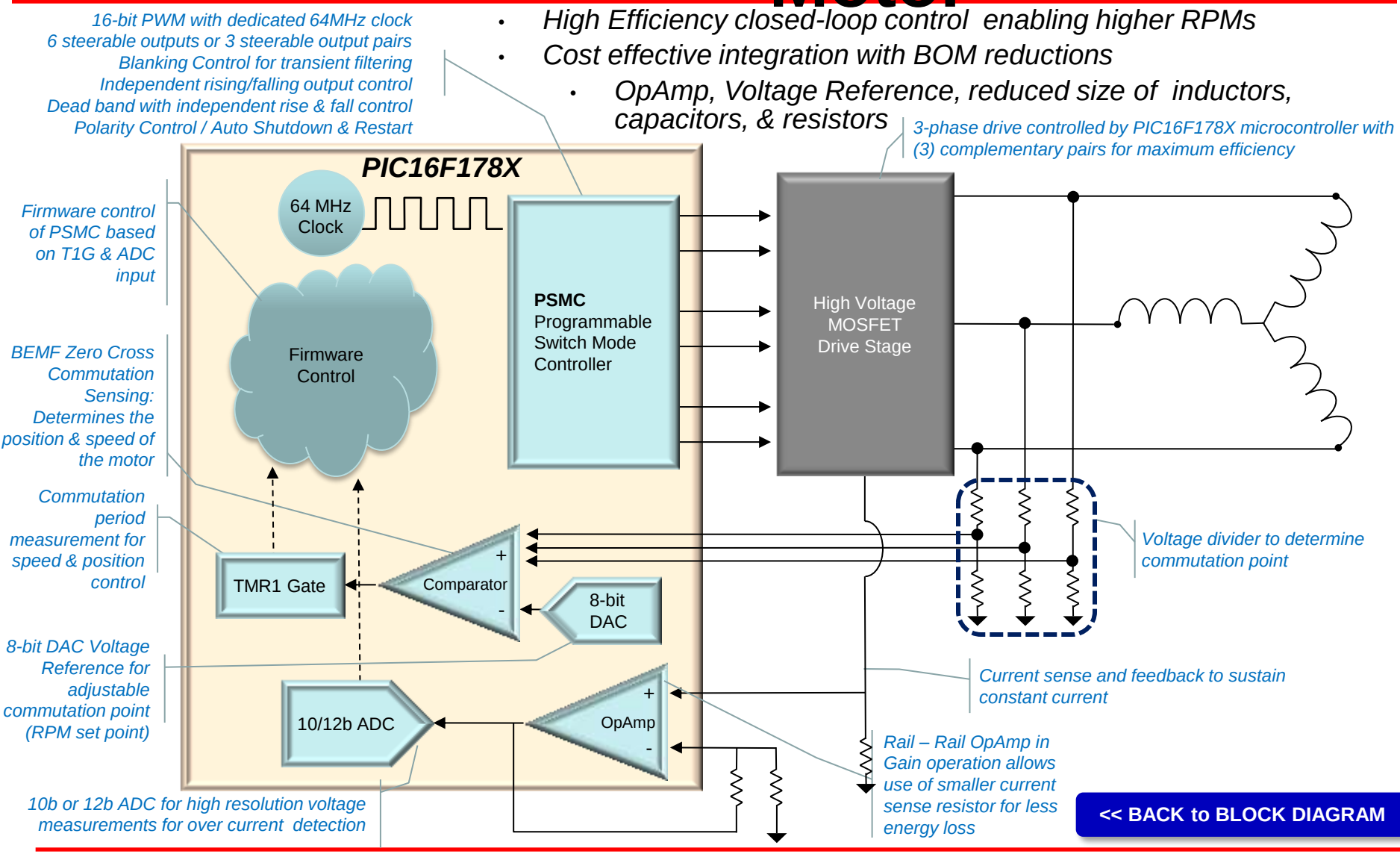

<< BACK to BLOCK DIAGRAM

Microchip Analog Products for Signal Chains

<< BACK to CONTENTS
NEXT

Microchip's Winning Attributes

- Low operating current to extend battery life
- A wide variety of analog and digital products for complete system solution
- Integration & small packages to occupy smaller footprints on the board and reduce cost
- High accuracy by trimming offset after packaging using non-volatile memory
- Competitive pricing for making the end equipment attractive on the market
- Great lead times and customer support

NEXT

Typical Signal Chain Diagram

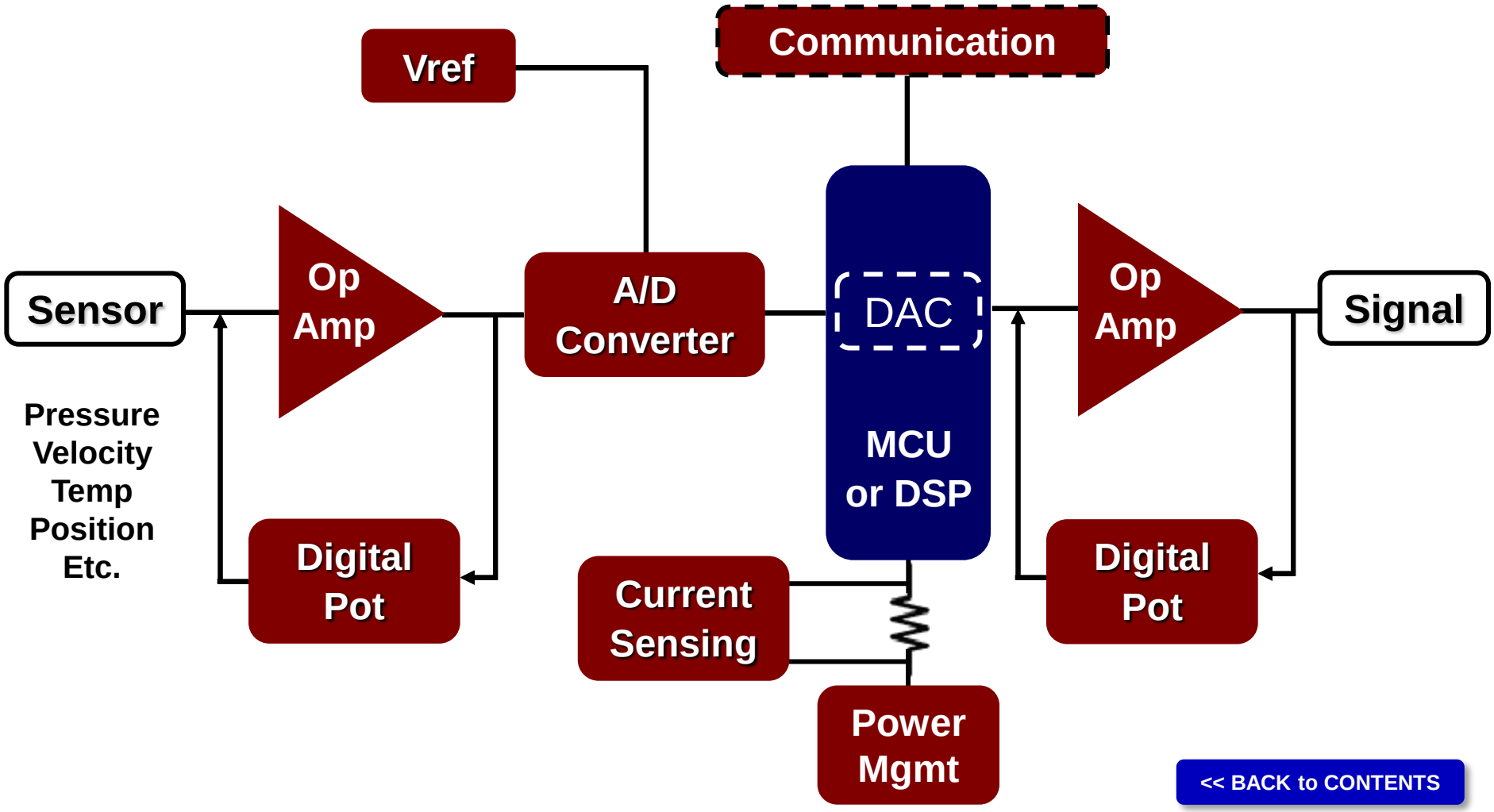

<< BACK to CONTENTS

Current Sensing

- **Function: To measurement current and voltage and communicate over SMBus**

Popular Products	Description	Product Web Page
PAC1710	The PAC1710 is a high-side bi-directional current sensing monitor with precision voltage measurement capabilities. The power monitor measures the voltage developed across an external sense resistor to represent the high-side current of a battery or voltage regulator.	Click here
PAC1720	The PAC1720 is a dual high-side bi-directional current sensing monitor with precision voltage measurement capabilities. Each sensor measures the voltage developed across an external sense resistor to represent the high-side current of a battery or voltage regulator.	Click here

<< BACK to BLOCK DIAGRAM

Operational Amplifiers

- **Function: buffering and filtering sensor signals for preserving signal characteristics and rejecting unwanted frequencies**

Popular Products	Description	Product Web Page
MCP6404	The MCP6404 is a quad general purpose op amp offering rail-to-rail input and output over the 1.8 to 6V operating range. This amplifier has a typical GBWP of 1 MHz with typ. quiescent current of 40microamperes.	Click here
MCP6N11	The MCP6N11 single instrumentation amplifier is optimized for single-supply operation with rail-to-rail input and output performance. Two external resistors set the gain, minimizing gain error and drift over temperature. The supply voltage range of 1.8V to 5.5V is low enough to support many portable applications	Click Here
Additional Suggested Products: MCP60x, MCP644x, MCP600x, MCP603x, MCP6Vxx		

Winning Attributes

<< BACK to BLOCK DIAGRAM

Operational Amplifiers

- **Attributes:**
  - Small SC-70, TDFN and SOT-23 packages
  - GBWP: 9 kHz to 60MHz
  - Excellent operating current-to-GBWP ratio
  - Mostly rail-to-rail inputs and outputs
  - Offset voltage: as low as 2µV (MCP6V0x)
  - Chip Select capability for power savings

BACK

Analog-to-Digital Converters

- **Function: Converting analog voltage or current signal (pressure, position, temperature, etc.) into digital data that a microcontroller can use**

Popular Products	Description	Product Web Page
MCP3221	The MCP3221 is a 12-bit SAR A/D converter. Available in the SOT-23 package, the MCP3221 provides a low max. conversion current and standby current of 250 µA and 1 µA respectively. Communication to the MCP3221 is performed using a 2-wire I2C™ Compatible interface. The MCP3221 runs on a single supply voltage range of 2.7 V to 5.5 V.	Click Here
MCP3421	The MCP3421 is a single channel low-noise, high accuracy Delta-Sigma A/D converter with differential inputs and up to 18 bits of resolution in a small SOT-23-6 package. The device uses a two-wire I2C™ compatible serial interface and operates from a single power supply ranging from 2.7V to 5.5V.	Click Here

Winning Attributes

<< BACK to BLOCK DIAGRAM

Analog-to-Digital Converters

- **SAR Attributes:**
  - Resolution: 8 to 13 bits
  - Max sampling rate: up to 200 ksps
  - Linearity: ±1LSB DNL, ±1LSB INL
  - Current consumption: 175 to 500µA (max.)
  - Single supply voltage: 2.7V to 5.5V
  - Small packages: SOT-23 and MSOP

- **Delta-Sigma Attributes:**
  - Resolution: 16 to 22 bits
  - Max sampling rate: up to 240 sps
  - Current consumption: 120 to 155 µA (max.)
  - Single supply voltage: 2.7V to 5.5V
  - Small packages: SOT-23 and MSOP

BACK

Digital Potentiometers

- **Function: buffering and filtering sensor signals for preserving signal characteristics and rejecting unwanted frequencies**

Popular Products	Description	Product Web Page
MCP4021	The MCP402X devices are non-volatile, 6-bit (64 wiper steps) digital potentiometers that are programmed/reprogrammed through a simple up/down serial interface.	Click Here
MCP45xx	The MCP45XX devices offer a wide range of product offerings using an I2C™Compatible interface. This family of devices support a 7-bit resistor network, Non-Volatile memory configurations, and Potentiometer and Rheostat pinouts. WiperLock Technology allows application-specific calibration settings to be secured in the EEPROM.	Click Here
Additional Suggested Products: MCP46xx, 43xx, MCP44xx		

Winning Attributes

<< BACK to BLOCK DIAGRAM

Digital Potentiometers

- **Attributes:**
  - 6 to 8-bit resolution
  - 2k, 5k, 10k, 50k and 100k Ohm options
  - Low operating and shutdown current
  - ±1 LSB max INL & DNL
  - Single or dual per package
  - Small SOT-23 & 3x2 DFN packages

BACK

Voltage References

- **Function: providing the system with an accurate analog voltage for comparison (needed for ADC)**

Popular Products	Description	Product Web Page
MCP1525/41	MCP1525/41 is a low power, high precision voltage reference. It provides a precise output voltage of 4.096V which is then compared to other voltages in the system.	Click Here
MCP1501	The MCP1501 is a high-precision buffered voltage reference with an initial accuracy of 0.10% and is available in 8 voltage options. The MCP1501 is a low-drift bandgap-based reference and uses chopper-based amplifiers which significantly reduces the drift and provides high current output.	Click Here

Winning Attributes

<< BACK to BLOCK DIAGRAM

Voltage References

- **Attributes:**
  - 1.2V (TC1070), 2.5V or 4.096V output
  - Initial accuracy: ±1% (max)
  - Temperature coefficient: 50ppm/°C (max)
  - Output current: ±2mA
  - Operating current: 100µA (max)
  - Industrial temperature range: -40°C to +85°C
  - SOT-23 and TO-92 packages

BACK

(Low-Iq) Power Management ICs

- **Function: monitoring critical voltage levels and providing regulated, low-noise supply voltages (Vin>Vout) for the system**

Popular Products	Description	Product Web Page
MCP1700	The MCP1700 can source up to 250mA of current with an extremely low input-output voltage differential of 178mV at 250mA. with the low current consumption of only	Click Here
TCM809	The reset output is driven active within 20 µsec of VCC falling through the reset voltage threshold. Reset is maintained active for a minimum of 140msec after VCC rises above the reset threshold.	Click Here
MCP1xx	The MCP1xx are a family of voltage supervisory devices which also operates as protection from brown-out conditions when the supply voltage drops below a safe operating level	Click Here

Winning Attributes

<< BACK to BLOCK DIAGRAM

(Low-Iq) Power Management ICs

- **Attributes:**
  - Extremely low operating current: as low as 1µA (typ)
  - Initial accuracy: ±2%
  - Wide range of voltage options
  - Industrial temperature range: -40°C to +85°C
  - SC-70, SOT-23 and TO-92 packages

BACK

Infrared

- **Function: providing low-cost, wireless two-way data connection**

Popular Products	Description	Product Web Page
MCP2122	Converts serial data from UART bit streams to IrDA standard bit streams (encodes) and from IrDA standard bit streams to UART bit streams (decodes). Requires input clock that is 16x needed baud rate.	Click Here
MCP2140	MCP2140 embeds IrDA protocol handling and bit encoding/decoding, and provides the lowest cost, lowest power consumption solution for adding IrDA connectivity to embedded systems	Click Here
MCP2155	MCP2155 provided IrDA protocol handling PLUS bit encoding/decoding functionality for Data Communication Equipment (DCE) applications in one low pincount device. Supports the IrCOMM (9-wire cooked service class), TinyTP, IrLMP, and IrLAP layers of the IrDA Standard protocol stack PLUS the bit encoding/decoding portion of the IrPHY	Click Here

Winning Attributes

<< BACK to BLOCK DIAGRAM

Infrared

- **Attributes:**
  - Enable infrared communication to be easily added to existing system
  - IrDA® standard protocol embedded on chip (up to 115.2 kbaud)
  - DTE and DCE applications supported
  - Simple and flexible infrared encoder/decoder
  - Easy to use developer's kit

BACK

8-bit MCU Highlights

- **PIC® MCU and AVR® Architectures**
  - Rich history in embedded design
  - Industry's strongest product portfolio
  - Powerful, easy-to-use tool chains
  - Best product lifecycle support
  - Innovative new peripherals

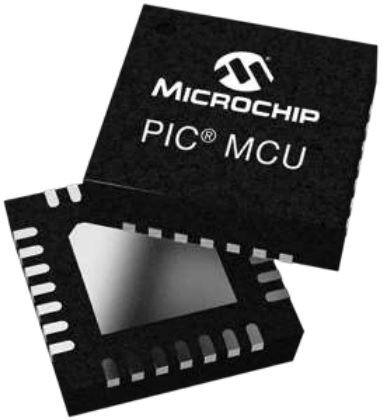

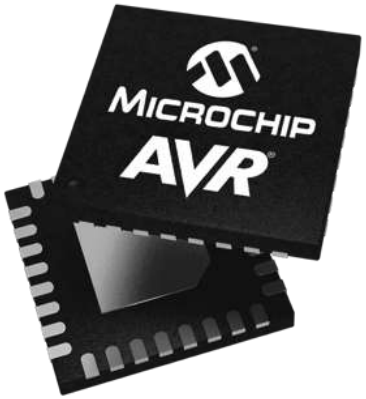

NEXT

8-bit MCU Highlights

More Than 1,250 8-bit MCUs in Our Portfolio!

- **Code-Saving Peripherals**
  - Core Independent Peripherals & Event System
  - Touch sensing technologies
- **Lowest Power**
  - picoPower & XLP technologies
- **Highest Robustness**
  - Reliable operation in the harshest environments
  - Best in class EMI/EMC performance
- **Best Design Community**
  - AVR® Freaks community
  - MPLAB® Xpress community

NEXT

16-bit MCU Highlights

- **Ideal for Low Power, Motor Control and Digital Power**
  - Currently 425+ devices in production, 14 pin thru 144 pin
  - Flash Memory 4KB – 1024KB , RAM 256B – 96KB
  - 16 – 70 MIPS, DSP options
  - High-speed control loop execution with fast and predictable interrupts
- **Flexible Peripherals**
  - Fast and flexible PWMs and ADCs for Motor Control and Digital Power
  - Connectivity with USB, CAN and LIN
  - Integrated drivers for segmented LCD, Graphical TFT and e-Paper displays
  - Analog: 16-bit Sigma-Delta ADC, 10Msps 12-bit ADC, DAC and Op Amps
  - Functional Safety peripherals & functions
- **Lowest power 16-bit MCU**
  - Down to 9 nA in Deep Sleep
  - As low as 170 nA with RTCC active
  - Active mode currents as low as 150 µA / MHz

NEXT

16-bit MCU Highlights

- **Free Graphical Programming Environment - MCC**
  - Automated Configuration of Peripherals & Functions
  - Intuitive Interface for Quick Start Development
- **Free Software and Reference Designs**
  - USB, Graphics and Wireless stacks
  - DSP math function library (FFT, IIR, etc.) & Class B library
  - Motor Control libraries and Simulink models
  - Reference designs for Digital Power and Lighting applications
- **Typical Applications**
  - Motor Control: BLDC, PMSM, ACIM, Sensorless Control, FOC
  - Digital Power: Platinum Spec AC/DC, DC/DC, Solar Micro Inverter, PFC
  - Portable or Low Power: Run longer, save power, battery friendly
  - Displays: Directly drive Segmented or Graphical displays with single chip
- **Development Support from Microchip**
  - Silicon, Dev Tools, IDE, Compilers all from one vendor

<< BACK to BLOCK DIAGRAM

Microchip Analog Products for Wireless Handsets and Modules

<< BACK to CONTENTS

NEXT

Microchip's Winning Attributes

- Low operating current to extend battery life
- Integration & small packages to occupy smaller footprints on the board and reduce cost
- Competitive pricing for making the end equipment attractive on the market
- Low noise operation for allowing "clean" RF communication
- Wide product offering for minimizing customer's transaction and inventory costs
- Great lead times and customer support

NEXT

Microchip Products for Wireless Handsets

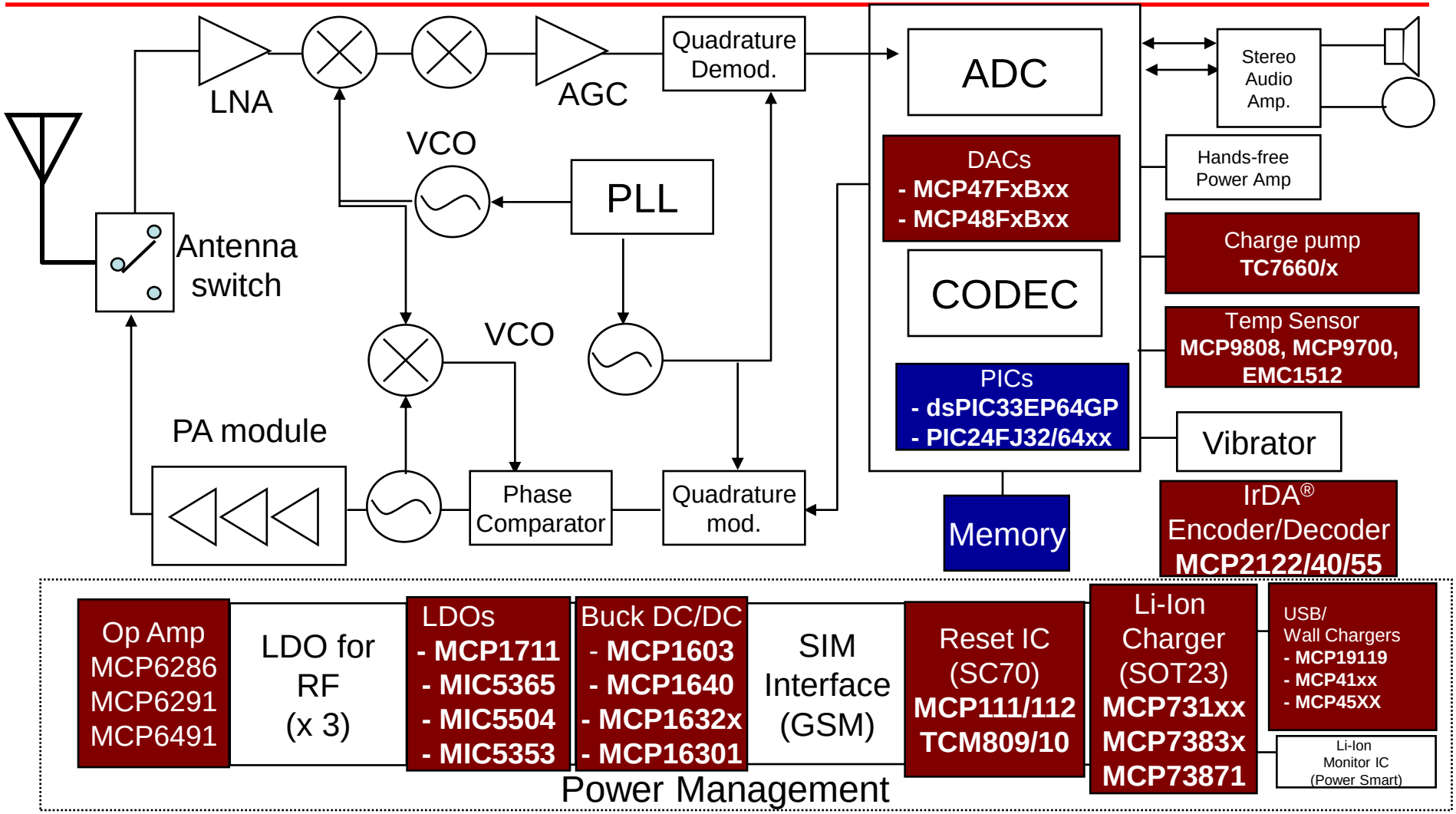

<< BACK to CONTENTS

USB/ Wall Chargers

Popular Products	Description	Product Web Page
UCS1001	USB Port Power Controller with Charger Emulation	Click Here
UCS1002	Programmable USB Port Power Controller with Charger Emulation	Click Here
UCS1003	Programmable USB Port Power Controller with Charger Emulation, Current Monitoring, and Charge Rationing for Power Allocation	Click Here
MIC2545A	Integrated high-side adjustable 3A current-limited power switch optimized for low-loss DC power switching and other power-management applications.	Click Here
MIC2039	High-Accuracy, High-Side, Adjustable 2.5A Current Limit Power Switch	Click Here

Winning Attributes

<< BACK to BLOCK DIAGRAM

USB/Wall Chargers

- **Attributes:**
  - Protection for over-current, under-voltage, over-temperature, reverse-current, reverse-voltage conditions.
  - Adjustable constant current limiting protects the switch and attached device.
  - Integrated soft-start circuit minimizes and controls inrush currents for high capacitive loads.
  - Integrated high speed USB2.0 switches for charger emulation supporting BC1.2, Apple, Samsung, and legacy charging profiles.

BACK

Low Dropout Regulators

Function	Popular Products	Description	Product Web Page
Supply power to the analog (baseband) section - RF, IF, audio	MIC5308	150mA High PSRR, Low Iq LDO for noise sensitive RF, IF and Audio applications	Click Here
	MIC5309	300mA High PSRR, Low Iq LDO for noise sensitive RF, IF and Audio applications	Click Here
Supply power to the digital section - modem, DSP, codec	MIC5365	150mA High PSRR, ultra small 1x1 DFN LDO	Click here
	MCP1703A	250mA 16Vin LDO with low Iq	Click Here

Winning Attributes

<< BACK to BLOCK DIAGRAM

Low Dropout Regulators

- **Attributes:**
  - High PSRR to filter incoming noises for noise sensitive applications such as RF, Audio codecs, IF, WiFi Modules.
  - Small Package 1x1 DFN allows flexibility on PCB layout
  - Low Iq of 2 uA can extend the battery life of handsets or any other battery operated applications

BACK

RESET Monitors

- **Function: Resets the CPU, DSP, and modem when supply voltage falls below threshold**

Popular Products	Description	Product Web Page
TCM809	The reset output is driven active within 20 µsec of VCC falling through the reset voltage threshold. Reset is maintained active for a minimum of 140msec after VCC rises above the reset threshold.	Click Here
MCP100/1/2/3/21/20/31	The MCP1xx are a family of voltage supervisory devices which also operates as protection from brown-out conditions when the supply voltage drops below a safe operating level	Click Here

Winning Attributes

NEXT: Voltage Detectors

RESET Monitors

- **Attributes:**
  - Tiny SOT-23 and SC-70 packages
  - Very low operating current: as low as 1µA (max)
  - High threshold voltage accuracy: ±2.8% (max)
  - V_{DD} transient immunity
  - Manual RESET
  - Many available options: push-pull output, open-drain output and internal pull-up resistor

BACK

Voltage Detectors

- **Function: Monitor battery voltage level and indicate low-battery condition, monitor regulated supply voltages to RF, IF, and analog baseband sections**

Popular Products	Description	Product Web Page
MCP111/2	The MCP111/112 Series are CMOS voltage detectors are well suited for portable, consumer electrics applications due to the extremely low 1uA operating current and small surface-mount packaging. These devices are designed to hold the microcontroller in reset until the supply voltage reaches a predetermined operating level. These devices also protect against brownout conditions that occur as a result of the supply voltage dropping below a tolerable level.	Click Here

Winning Attributes

<< BACK to BLOCK DIAGRAM

Voltage Detectors

- **Attributes:**
  - Tiny SOT-23 and SC-70 packages
  - Very low operating current: 1µA (typ)
  - Precise thresholds: ±2% (typ)
  - Open-drain and push-pull outputs

BACK

Battery Chargers

- **Function: Charge & monitor the Lithium Ion battery**

Popular Products	Description	Product Web Page
MCP731xx	The MCP73811/2 devices are linear charge management controllers that are designed to provide specific charge algorithms for single cell Li-Ion or Li-Polymer battery to achieve optimal capacity in the shortest charging time possible.	Click Here
MCP732xx	The MCP73123/223 is a highly integrated Lithium Iron Phosphate (LiFePO4) battery charge management controller that provide specific charge algorithms for LiFePO4 batteries to achieve optimal capacity and safety in the shortest charging time possible. Along with its small physical size, the low number of external components makes the MCP73123/223 ideally suitable for various applications.	Click Here

Winning Attributes

<< BACK to BLOCK DIAGRAM

Battery Chargers

- **Attributes:**
  - Small thermally efficient DFN and QFN packages
  - High-accuracy voltage regulation: ±0.5% (max)
  - Low operating current: 260µA (typ)
  - Shutdown and pre-conditioning modes
  - Temperature monitor & charge complete indicator
  - USB/AC inputs
  - Loadsharing
  - Overvoltage Protection (OVP)

BACK

Operational Amplifiers

- **Function: filtering/amplifying for analog baseband and audio signal processing**

Popular Products	Description	Product Web Page
MCP6286	The MCP6286 operational amplifier provides low noise (5.4 nV/√Hz, typical), low power (520 µA, typical) and rail-to-rail output operation. It is unity gain stable and has a gain bandwidth product of 3.5 MHz. This device operates with a single supply voltage from 2.2V to 5.5V.	Click Here
MCP6291	The MCP629x family of operational amplifiers provides wide bandwidth for the current. This family has a 10 MHz gain bandwidth product, operates from a single supply voltage as low as 2.4V, while drawing 1 mA (typical) quiescent current.	Click Here
MCP6491	The MCP649x family of operational amplifiers has low-input bias current (150 pA, typical at 125°C) and rail-to-rail input and output operation. This family is unity gain stable and has a gain bandwidth product of 7.5 MHz. These devices operate with a single-supply voltage as low as 2.4V, while only drawing 530 µA/amplifier (typical) of quiescent current.	Click Here

Winning Attributes

<< BACK to BLOCK DIAGRAM

Operational Amplifiers

- **Attributes:**
  - Small SC-70, TDFN and SOT-23 packages
  - GBWP: 9 kHz to 410 MHz
  - Excellent operating current-to-GBWP ratio
  - Mostly rail-to-rail inputs and outputs
  - Offset voltage: as low as 2µV (MCP6V0x)
  - Chip Select capability for power savings

BACK

Charge Pumps

- **Function: Provides simple and low cost DC to DC conversion**

Popular Products	Description	Product Web Page
TC7660x	Wide input, efficient voltage conversion DC-to-DC Charge Pump	Click Here

Winning Attributes

<< BACK to BLOCK DIAGRAM

Charge Pumps

- **Attributes:**
  - Wide Input Voltage Range: 1.5 to 10V
  - Efficient Voltage Conversion (99.9% typ.)
  - Excellent Power Efficiency (98% typ.)
  - Low Power Consumption (80uA typ.)
  - Low Cost and Easy to Use
    - Only Two External Capacitors Required
  - Improved ESD Protection (3kV HBM)

BACK

Temperature Sensors

- **Function: adjusting LCD contrast, measuring RF Power Amplifier temperature, thermally compensate RF oscillator**

Popular Products	Description	Product Web Page
MCP9808 Digital temperature sensor	The MCP9808 converts temperatures between -20°C and +100°C to a digital word with ±0.5°C (max.) accuracy	Click Here
MCP9700 Linear Active Thermistor™ ICs	The output voltage of this device is directly proportional to measured temperature. The MCP9700 can accurately measure temperature from -40C to +150C with the output calibrated to a slope of 10mV/°C and has a DC offset of 500mV.	Click Here
EMC1412 Dual SMBus/I^2C™ Temperature Sensor	This 1°C device has an local temperature channel and a remote temperature channel for reading ASIC temperatures or external temperatures. It is available in a 2x3 package.	Click Here

Winning Attributes

<< BACK to BLOCK DIAGRAM

Temperature Sensors Winning Attributes

- **Attributes:**
  - Small SC70, SOT-23 and DFN leadless packages
  - Very low operating current: 35 to 250µA (typ)
  - Very low shutdown current: 1µA (max)
  - High temp accuracy: ±0.25°C
  - Simple operation: no need for external components
  - Analog and digital (SPI™, I2C™, SMBus™) devices
  - High temperature resolution
  - Small SC70, SOT-23 and DFN leadless packages

BACK

Switching Regulators

- **Function: efficiently convert Li-Ion voltage to DC voltage level required by the DSP or CPU**

Popular Products	Description	Product Web Page
MCP163xx	MCP163xx are highly integrated, high-efficiency, fixed frequency, step-down DC-DC converter that operates from input voltage sources up to 30V. Integrated features include a high side switch, fixed frequency Peak Current Mode Control, internal compensation, peak current limit and over temperature protection. Minimal external components are necessary to develop a complete step-down DC-DC converter power supply.	Click Here
MCP1640	The MCP1640 is a compact, high-efficiency, fixed frequency, synchronous step-up DC-DC converter. It provides an easy-to-use power supply solution for applications powered by either one-cell, two-cell, or three-cell alkaline, NiCd, NiMH, one-cell Li-Ion or Li-Polymer batteries.	Click Here
MIC2875	The MIC2875 is a compact and highly-efficient 2MHz synchronous boost regulator with a 4.8A switch. It features a bi-directional load disconnect, bypass mode, and integrated anti-ringing switch to minimize EMI. The MIC2875 is designed to operate with a minimum switching frequency of 45kHz to minimize switching artifacts in the audio band.	Click Here

Winning Attributes

<< BACK to BLOCK DIAGRAM

Switching Regulators

- **Attributes:**
  - Small SOT and DFN package
  - Auto-switching PWM/PFM operation
  - Efficiency as high as 96%
  - Very low shutdown current <1µA (typ)
  - Input voltage as high as 30V
  - UVLO, Soft-start & over-temperature protection
  - Boost Start-up as low as 0.65V
  - Bi-directional true load disconnect
  - Integrated anti-ringing switch
  - Bypass mode for $V_{IN} \geq V_{OUT}$

BACK

Infrared

- **Function: providing low-cost, wireless two-way data connection - infrared port**

Popular Products	Description	Product Web Page
MCP2122	Converts serial data from UART bit streams to IrDA standard bit streams (encodes) and from IrDA standard bit streams to UART bit streams (decodes). Requires input clock that is 16x needed baud rate.	Click Here
MCP2140	MCP2140 embeds IrDA protocol handling and bit encoding/decoding, and provides the lowest cost, lowest power consumption solution for adding IrDA connectivity to embedded systems	Click Here
MCP2155	MCP2155 provided IrDA protocol handling PLUS bit encoding/decoding functionality for Data Communication Equipment (DCE) applications in one low pincount device. Supports the IrCOMM (9-wire cooked service class), TinyTP, IrLMP, and IrLAP layers of the IrDA Standard protocol stack PLUS the bit encoding/decoding portion of the IrPHY	Click Here

Winning Attributes

<< BACK to BLOCK DIAGRAM

Infrared

- **Attributes:**
  - Enable infrared communication to be easily added to existing system
  - IrDA® standard protocol embedded on chip (up to 115.2 kbaud)
  - DTE and DCE applications supported
  - Simple and flexible infrared encoder/decoder
  - Easy to use developer's kit

BACK

DACs

- **Function: Convert digital processed signal back to analog output signal**

Popular Products	Description	Product Web Page
MCP47FEB01/2/3 MCP47FEB11/2/3 MCP47FEB21/2/3	Single/Dual, 8-/10-/12-bit DAC with EEPROM and I^2C Interface	Click Here
MCP48FEB01/2/3 MCP48FEB11/2/3 MCP48FEB21/2/3	Single/Dual, 8-/10-/12-bit DAC with EEPROM and SPI Interface	Click Here

Winning Attributes

<< BACK to BLOCK DIAGRAM

DACs Winning Attributes

- **Attributes:**
  - Integrated EEPROM to save DAC settings at power-down
  - Selectable V_{REF} sources for design flexibility
  - Low power consumption to extend battery life
  - LAT pin allows DAC synchronization to an external event

BACK

Memory

- **Function: NOR flash used in feature phones and voice-centric phones to store boot code, phonebook, ringtone, SMS, or most recent camera images.**

Popular Products	Description	Product Web Page
SST26WF032C	Low power 1.8V 32Mb SQI (serial quad IO) flash, 104 MHz with XIP capability, small footprint	Click Here
SST26WF064C	Low power 1.8V 64Mb SQI (serial quad IO) flash, 104 MHz with XIP capability, small footprint	Click Here
SST39WF1601	Low power 1.8V 16Mb Parallel flash with random access and fast erase/program performance	Click Here
SST39VF1601C	3V 16Mb Parallel flash with random access and fast erase/program performance	Click Here

Winning Attributes

<< BACK to BLOCK DIAGRAM

Memory

- **Attributes:**
  - Extremely fast erase and re-write performance
  - Superior reliability with 100 years of data retention
  - Low power consumption ideal for any portable application
  - Small footprints suitable for compact designs

BACK

PIC Microcontrollers

- **Function: providing additional processing power for support of specific functions**
  - dsPIC33EP64GP: Echo and Noise Cancelling Support
  - PIC24FJ32/64xx: Monitoring and Supervisor Functions
- **Attributes:**
  - Easy migration in pins and memory
  - dsPIC33 with DSP instructions for math intensive applications
  - PIC24F for low cost and low power applications

NEXT

dsPIC33EP64GP506

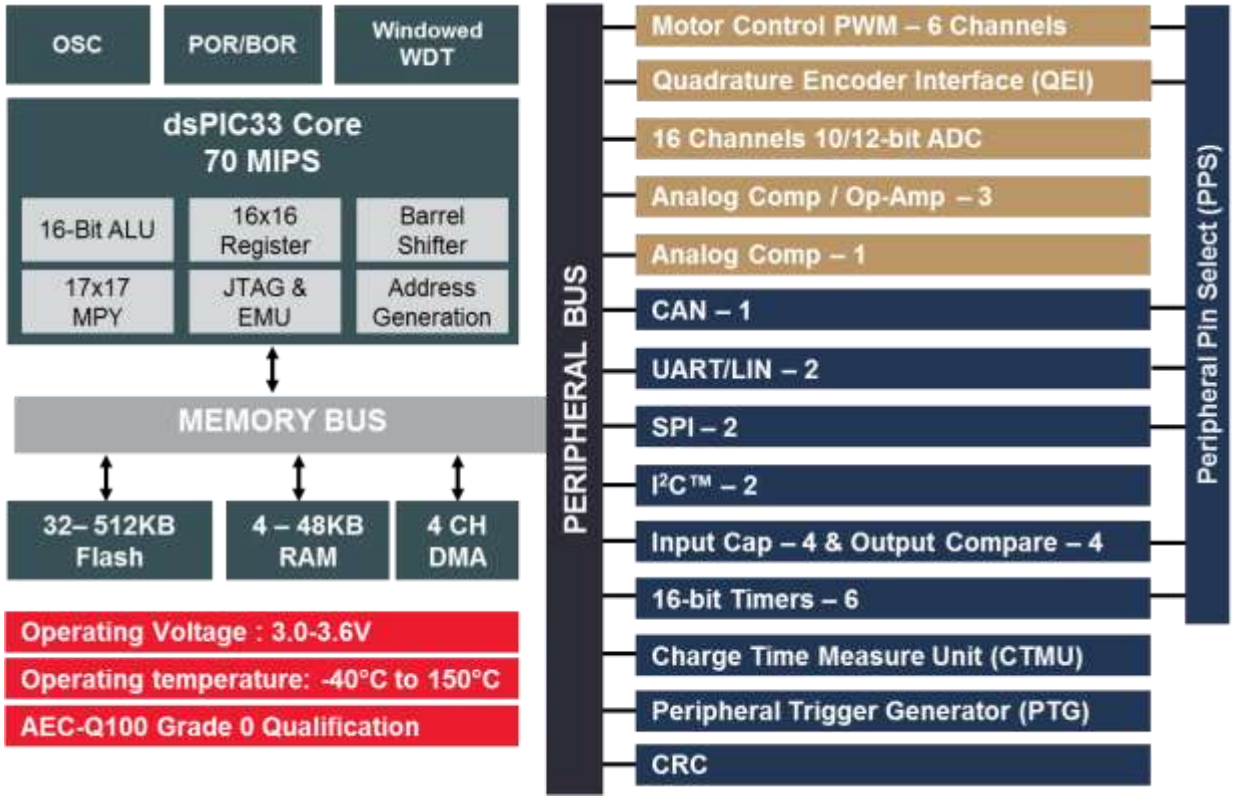

- Attributes:
  - Flash range from 32 to 512KB for scalability
  - 70 MIPS performance
  - 16-bit data path
  - 24-bit instructions
  - Robust peripheral set including UART, SPI, I2C, CAN, Timers
  - Peripheral mapping to pins

Package Options

- 28-pin: SPDIP, SOIC, SSOP
- 28-pin QFN-S
- 36-pin VTLA
- 44-pin: TQFP, QFN,
- 48-pin: uQFN
- 64-pin: TQFP, QFN (64KB or higher)

LEARN MORE

NEXT

PIC24FJ64GA004

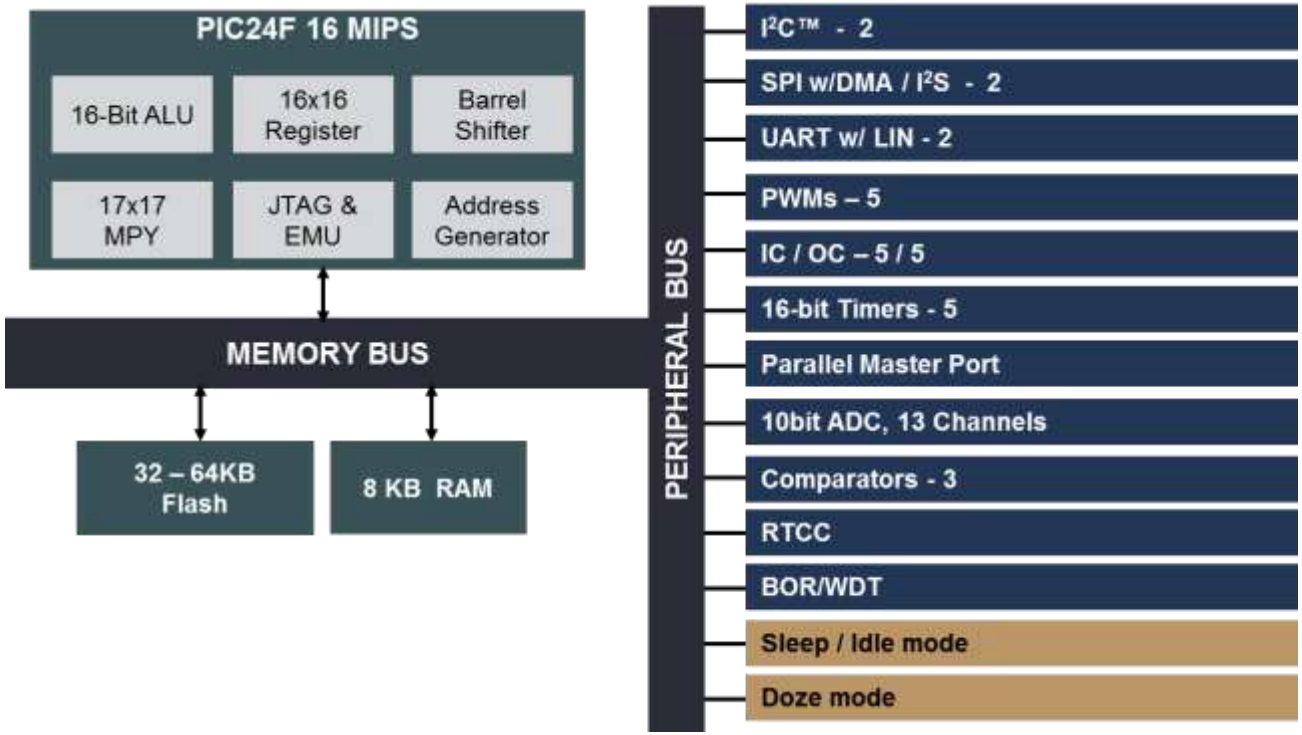

- Attributes:
  - Flash range from 32 to 64KB for scalability
  - 16 MIPS performance
  - 16-bit data path
  - 24-bit instructions
  - Robust peripheral set including UART, SPI, I2C, Timers
  - Low power and low cost

Package Options

- 28-pin: SPDIP, SOIC, SSOP
- 44-pin: TQFP, QFN

LEARN MORE

BACK

Microchip Analog Products for Power Supplies

<< BACK to CONTENTS
NEXT

Microchip's Winning Attributes

- A wide variety of analog and digital products for complete system solution
- One of the first & leading suppliers in MOSFET driver and temperature sensor products
- Great lead times and customer support
- Competitive pricing for making the end equipment attractive on the market
- Small packages to occupy smaller footprints on the board and reduce cost

Power Supply

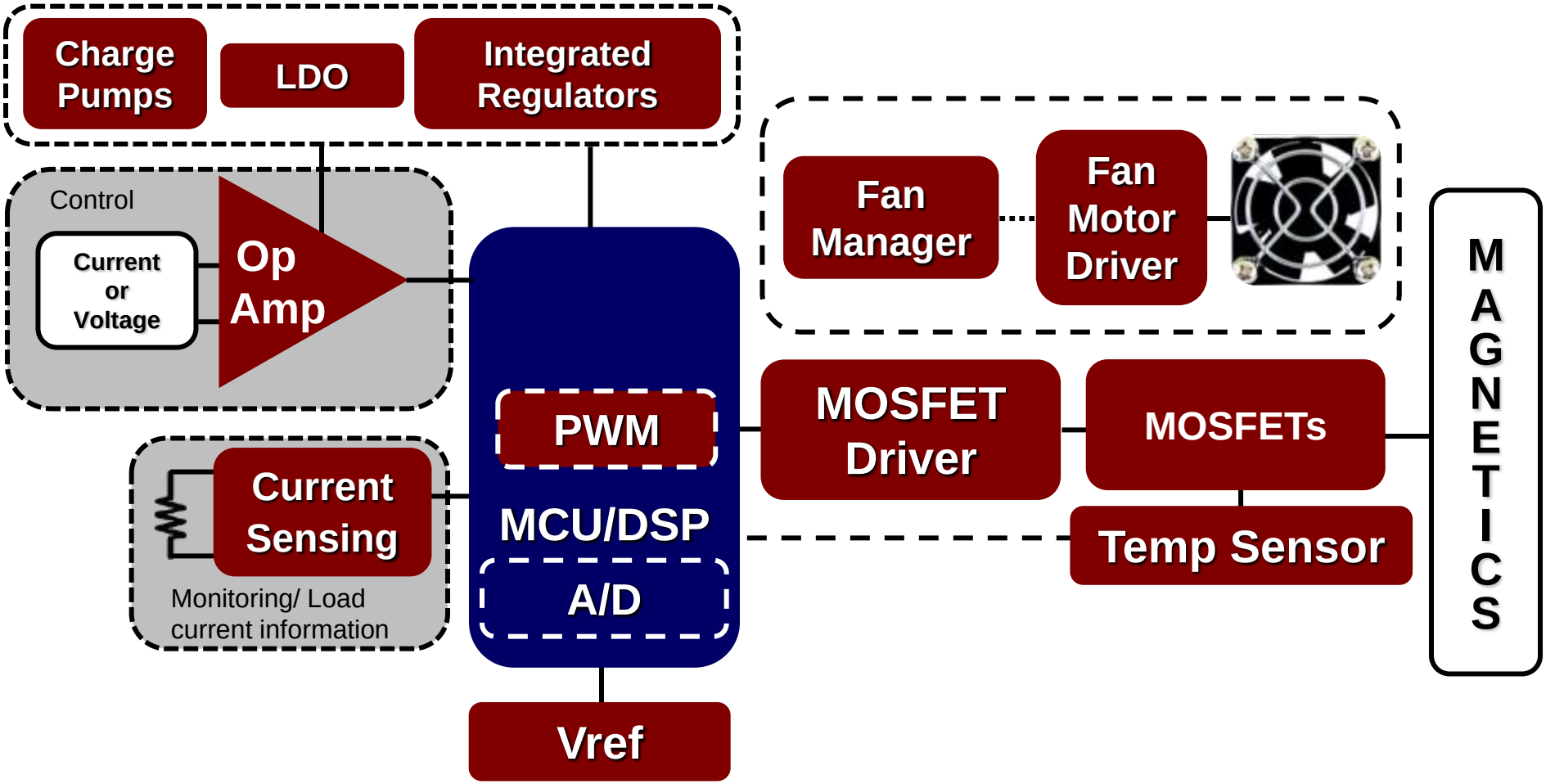

Metering Concentrator
Power Monitoring
Industrial Control Panel
2D Barcode Scanner
Distributed Point-of-Load Power Architecture
<< BACK to CONTENTS

Current Sensing

Popular Products	Description	Product Web Page
PAC1710	The PAC1710 is a high-side bi-directional current sensing monitor with precision voltage measurement capabilities. The power monitor measures the voltage developed across an external sense resistor to represent the high-side current of a battery or voltage regulator.	Click Here
PAC1720	The PAC1720 is a dual high-side bi-directional current sensing monitor with precision voltage measurement capabilities. Each sensor measures the voltage developed across an external sense resistor to represent the high-side current of a battery or voltage regulator.	Click Here
PAC1921	The PAC1921 is a dedicated power-monitoring device with a configurable analog output that can present power, current or voltage. The PAC1921 is designed for power measurement and diagnostic systems that cannot allow for latency when performing high-speed power management.	Click Here

<< BACK to BLOCK DIAGRAM

Fan Managers

- **Function: controlling fan speed according to ambient temperature for reducing acoustic noise and extending fan life**

Popular Products	Description	Product Web Page
EMC2101	The EMC2101 is an SMBus 2.0 compliant, integrated fan control solution complete with two temperature monitors, one external and one internal.	Click Here

Fan Motor Driver

<< BACK to BLOCK DIAGRAM

Fan Motor Driver

Products		Description	Product Web Page
Three-Phase BLDC Fan Motor Drivers	MTD6501C/D/G (23kHz)	Standalone 3-Φ Sinusoidal Sensorless BLDC Motor Controller. 12V; I_{MAX} = 800 mA	Click Here
	MTD6502B	Standalone 3-Phase Sinusoidal Sensorless BLDC Motor Controller. 5V Application; I_{MAX} = 750 mA ; TDFN - 10	Click Here
	MTD6505	Standalone 3-Phase Sinusoidal Sensorless BLDC Motor Controller - 5V Application; I_{MAX} = 750 mA ; UDFN – 10; -Programmable BEMF Coefficient	Click Here

Fan Managers

<< BACK to BLOCK DIAGRAM

Temperature Sensors

- **Function: Shutting down the system when temperature rises above operating limit**

Popular Products	Description	Product Web Page
TC1047A	Supply Voltage Range: 2.5V to 5.5V, Wide Temperature Measurement Range: -40°C to +125°C, High Temperature Converter Accuracy: ± 2°C, Max, at 25°C, Linear Temperature Slope: 10mV/°C, Very Low Supply Current: 35µA Typical	Click Here
EMC1701	The EMC1701 is a combination high-side current sensing device with precision temperature measurement. It measures the voltage developed across an external sense resistor to represent the high-side current of a battery or voltage regulator.	Click Here
EMC1412	The EMC1412 is a high accuracy, low cost, System Management Bus (SMBus) temperature sensor. Advanced features such as Resistance Error Correction , Beta Compensation and automatic diode type detection combine to provide a robust solution for complex environmental monitoring applications	Click Here

<< BACK to BLOCK DIAGRAM

MOSFET Drivers

- **Function: driving the high power devices (MOSFETs, bipolar transistors, IGBTs)**

Popular Products	Description	Product Web Page
TC4427A	Supply Voltage Range: 2.5V to 5.5V Wide Temperature Measurement Range: -40°C to +125°C High Temperature Converter Accuracy: ± 2°C, Max, at 25°C Linear Temperature Slope: 10mV/°C Very Low Supply Current: 35µA Typical	Click Here
MCP14A0151/2	The MCP14A0151 and MCP14A0152 are inverting and non-inverting, 1.5 A MOSFET drivers in 2x2 DFN and SOT-23 packages. The small package sizes allow the gate driver to be positioned close to the MOSFET's physical gate connection, which minimizes gate bounce caused by the parasitic effects of PCB layout and reduces EMI. These devices feature a unique architecture with low input thresholds, ideally suited for use with a low-voltage MCU to minimize power losses within the system.	Click Here
MCP14E3/E4/E5	The MCP14E3/E4/E5 devices are a family of 4.5A,dual output buffers/MOSFET drivers with seperate enable functions for each output. As MOSFET drivers, the MCP14E3/E4/E5 can easily charge 2200 pF gate capacitance in under 28 nsec (max)	Click Here

<< BACK to BLOCK DIAGRAM

Voltage References

- **Function: providing the system with an accurate analog voltage for comparison**

Popular Products	Description	Product Web Page
MCP1525/41	MCP1525/41 is a low power, high precision voltage reference. It provides a precise output voltage of 4.096V which is then compared to other voltages in the system.	Click Here
MCP1501	The MCP1501 is a high-precision buffered voltage reference with an initial accuracy of 0.10% and is available in 8 voltage options. The MCP1501 is a low-drift bandgap-based reference and uses chopper-based amplifiers which significantly reduces the drift and provides high current output.	Click Here

<< BACK to BLOCK DIAGRAM

Analog PWM Controllers

- **Function: PWM generation to maintain stable power supply outputs while managing faults**

Popular Products	Description	Product Web Page
MIC2125/6	Constant-frequency synchronous buck controllers with a unique adaptive ON-time control architecture, and an optional transition to variable frequency, discontinuous conduction mode. Operating from an input from 4.5V to 28V, 200 kHz to 650 kHz with an output voltage adjustable down to 0.6V with a guaranteed accuracy of ±1%.	Click Here
MIC2176-x	Constant-frequency, synchronous buck controllers featuring a unique digitally modified adaptive ON-time control architecture for fast transient response with minimal output capacitance and High V_{IN}/Low V_{OUT} operation. Working over an input supply range from 4.5V to 75V; a constant switching frequency of 100, 200, or 300kHz; and an output voltage is adjustable down to 0.8V with a guaranteed accuracy of ±1%.	Click Here
MCP1630	When used with a microcontroller, the MCP1630 will control the power system duty cycle to provide output voltage or current regulation. The inputs are designed to easily attach to the I/O of a microcontroller, which supplies the reference and oscillator, to generate a flexible and adaptable power system.	Click Here

Winning Attributes

<< BACK to BLOCK DIAGRAM

PWM Controllers

- **Attributes:**
  - High speed PWM operation
  - Peak current mode operation to 1.0MHz
  - Wide operating temperature range, -40°C to +125°C
  - MCP1630 accepts variable controlling inputs from µC
  - UVLO, short circuit, over current protection circuits
  - Precision peak current limiting

BACK

PIC Microcontrollers

- **Function: providing all the control functions and the PWM output for the system**
- **Popular products: PIC16F182X, 178X, 75X, 15XX, 193X**
- **Attributes:**
  - Upwards of 32MHz internal OSC
  - Slope compensation
  - 4 channel programmable switch mode controller (PSMC)
  - Integrated high performance comparators, op-amp, 10/12 bit ADC, 5/8/9 bit DAC
  - 256 bytes of EEPROM
  - Available in various packages

<< BACK to BLOCK DIAGRAM

Operational Amplifiers

Function	Popular Products	Description	Product Web Page
Sense and gain up output current - low offset voltage required for minimizing measurement error	MCP602x	The MCP6021/2/3/4 op amps have a gain bandwidth of 10 MHz with a low typical operating current of 1mA and an offset voltage that is less than 150 µV.	Click Here
	MCP6V01 Zero Drift Op Amps	VOS: ±2 µV (maximum), PSRR: 130 dB (minimum), CMRR: 130 dB (minimum), IQ: 300 µA/amplifier (typical) Wide Supply Voltage Range: 1.8V to 5.5V	Click Here
Provide feedback compensation by sensing output voltage and comparing it with reference voltage	MCP6404	The MCP6404 is a quad general purpose op amp offering rail-to-rail input and output over the 1.8 to 6V operating range. This amplifier has a typical GBWP of 1 MHz with typ. quiescent current of 40 microamperes.	Click Here
	MCP60x	MCP601/2/3/4 (op amp) has a gain bandwidth product of 2.8 MHz with low typical operating current of 230 µA and an offset voltage that is less than 2 mV.	Click Here

Winning Attributes

<< BACK to BLOCK DIAGRAM

Operational Amplifiers

- **Attributes:**
  - Small SC-70, TDFN and SOT-23 packages
  - GBWP: 9 kHz to 60MHz
  - Excellent operating current-to-GBWP ratio
  - Mostly rail-to-rail inputs and outputs
  - Offset voltage: as low as 2µV (MCP6V0x)
  - Chip Select capability for power savings

BACK

Power Management Linear Regulators (LDOs)

Popular Products	Description	Product Web Page
MCP1703A	With 250 mA maximum output and input voltage capability of up to 16V, this device creates compact systems. This features a low 2 µA quiescent current for efficient operation at light load.	Click Here
MIC5239 30V LDO	This is a low quiescent current, µCap low-dropout regulator. With a maximum operating input voltage of 30V and a quiescent current of 23µA, it is ideal for supplying keep-alive power in systems with high voltage batteries.	Click Here
MIC29302A	This high-current, low-cost, low-dropout voltage regulator uses a proprietary Super βeta PNP® process with a PNP pass element. The 3A LDO regulator features low 450mV (full load) dropout voltage and very low ground current.	Click Here
MCP1754/5	This 16 volt, high PSRR voltage regulator provides up to 150 mA of current (or 300 mA for MCP1755) with short circuit current foldback. Simplified, low pin count versions of the of these devices are also available.	MCP1754 MCP1755
MIC94325	With a 500mA rated output current, fixed or adjustable output voltages, and ripple blocking active noise rejection over a wide frequency band: >50dB from 10Hz to 5Mhz, these LDOs are suitable for a wide variety of applications. Available in Ultra-small 0.84mm x 1.32mm 6-ball CSP and 1.6mm x 1.6mm 6-pin Thin DFN, with enable and auto-discharge output options.	Click Here
MIC550X	Simple, effective 5.5V input LDO in the extremely compact 1x1 DFN.	Click Here

<< BACK to BLOCK DIAGRAM

Power Management Charge Pumps

- **Function: Compact, low current output boost conversion (increasing from input to output) or inversion (creating a negative output), without large, expensive inductors**

Popular Products	Description	Product Web Page
MCP1253/4	Regulated charge pumps, capable of maintaining a specific regulated output voltage from 2.1V to 5.0V input range, while supplying up to 120 mA load current. 3.3V, 5.0V, or adjustable output options available.	Click Here
TC7660/2	The TC7660 is a charge pump voltage converter that +1.5V to +10V input to a corresponding -1.5V to -10V output using two low-cost capacitors. Can also be used to double the input voltage.	Click Here

<< BACK to BLOCK DIAGRAM

Power Management Switching Regulators

Popular Products	Description	Product Web Page
MIC24046	Pin-programmable, high-efficiency, wide input range, 5A synchronous step-down regulator perfectly suited for multiple-voltage rail application environments typically found in computing and telecommunication systems. The pin-selectable switching frequency, adjustable output voltage, pin-selected current limit, valley-current mode control technique, high-performance error amplifier, and external compensation allow for the best trade-offs between high efficiency and the smallest possible solution size.	Click Here
MIC2405x	Constant-frequency, synchronous DC/DC buck regulator featuring adaptive on-time control architecture, and an internal linear 5V regulator to operate from 4.5 to 19V; at a constant 600kHz switching frequency in continuous-conduction mode; and can be used to provide up to 6A of output current at an adjustable output voltage down to 0.8V. With the HyperLight Load® architecture it has the ability to transition to variable-frequency, discontinuous-mode operation at light load, and a full suite of protection features to ensure protection of the IC during fault conditions (undervoltage lockout, thermal shutdown, internal soft-start, foldback current limit and “hiccup mode” short-circuit protection).	Click Here
MCP16311/2	The MCP16311/2 is a compact, high-efficiency, fixed frequency PWM/PFM, synchronous step-down DC-DC converter that operates from input voltage sources up to 30V. Integrated features include a high-side and a low-side switch, fixed frequency Peak Current Mode Control, internal compensation, peak-current limit and over temperature protection.	Click Here

<< BACK to BLOCK DIAGRAM

Distributed Point-of-Load Power Architecture

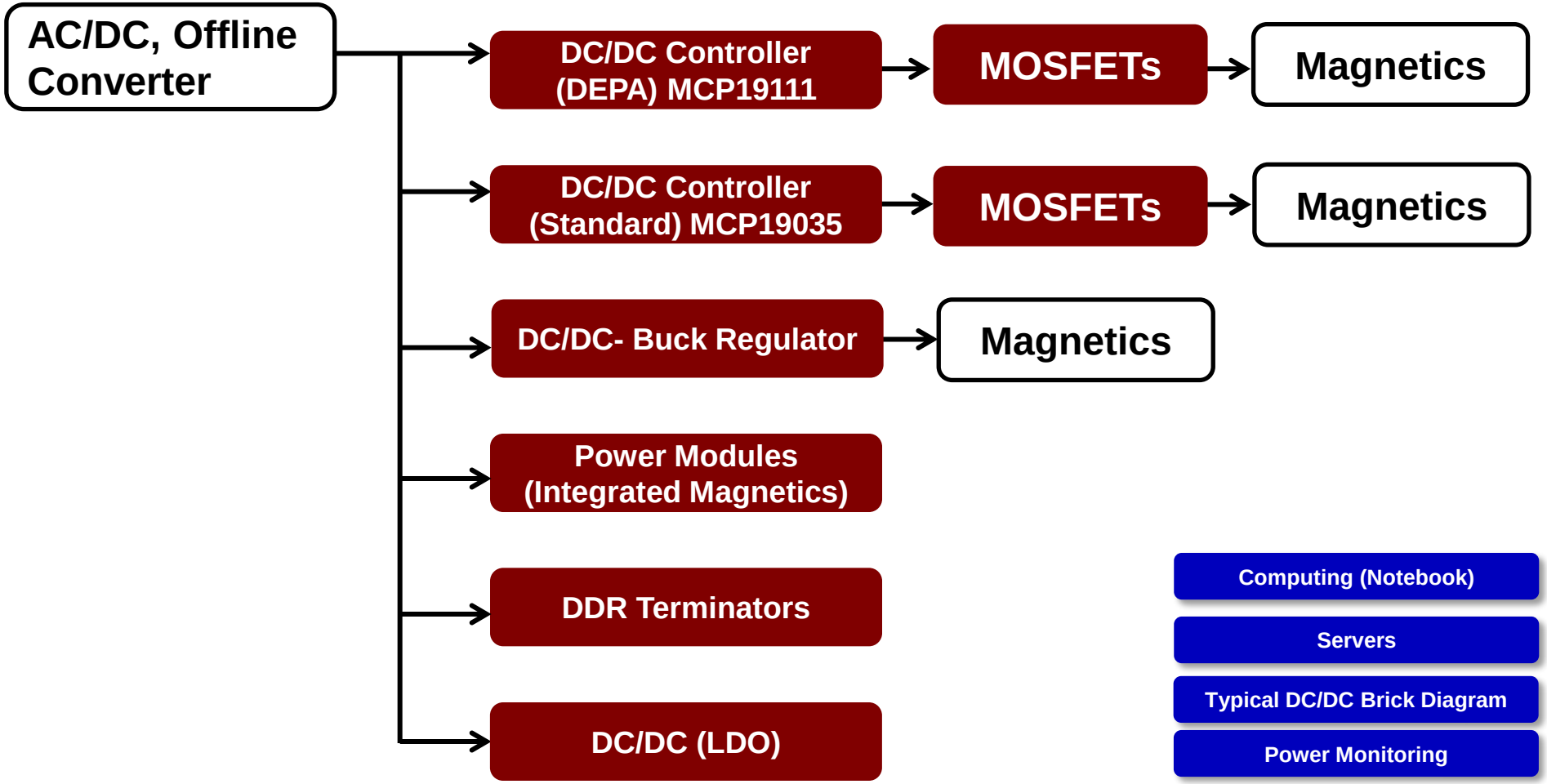

Computing (Notebook)

Servers

Typical DC/DC Brick Diagram

Power Monitoring

Power Stage of Ethernet Switch

<< BACK to CONTENTS

Digitally-Enhanced Power Analog Controllers

- **Function: Customizable, analog power controller with digital interfaces and a PIC® MCU core for**

Popular Products	Description	Product Web Page
MCP19110/1	The MCP19111 is a mid-voltage (4.5-32V) synchronous buck analog-based PWM controller family with an integrated 8-bit PIC® Microcontroller. This unique product combines the performance of a high-speed analog solution, including high-efficiency and fast transient response, with the configurability and communication interface of a digital solution. This can produce high-efficiency (>96%) DC/DC power-conversion solutions, with PMBus or digital communication, and on the fly operational adjustments.	Click Here
MCP19118/9	Similar to the MCP19111, capable of 40V operation and 48V transients.	Click Here
MCP19114/5	Brings the flexibility of the MCP19111 control and configuration to single dual low side drive topologies (flyback, boost , SEPIC, Cuk). Ideally suited for current regulation applications with intelligence, like smart LED drive or smart battery charging.	Click Here

<< BACK to BLOCK DIAGRAM

DC/DC Power Controller

- **Function: Analog PWM controller driving external power MOSFETs in high-power, DC-DC applications**

Popular Products	Description	Product Web Page
MIC2125/6	Constant-frequency synchronous buck controllers with a unique adaptive ON-time control architecture, and an optional transition to variable frequency, discontinuous conduction mode. Operating from an input from 4.5V to 28V, 200 kHz to 650 kHz with an output voltage adjustable down to 0.6V with a guaranteed accuracy of ±1%.	Click Here
MIC2176-x	Constant-frequency, synchronous buck controllers featuring a unique digitally modified adaptive ON-time control architecture for fast transient response with minimal output capacitance and High V_{IN}/Low V_{OUT} operation. Working over an input supply range from 4.5V to 75V; a constant switching frequency of 100, 200, or 300kHz; and an output voltage is adjustable down to 0.8V with a guaranteed accuracy of ±1%.	Click Here
MCP1630	When used with a microcontroller, the MCP1630 will control the power system duty cycle to provide output voltage or current regulation. The inputs are designed to easily attach to the I/O of a microcontroller, which supplies the reference and oscillator, to generate a flexible and adaptable power system.	Click Here

<< BACK to BLOCK DIAGRAM

High-Speed MOSFETs

Function: High-Efficiency, Switched Mode Power Conversion Power Devices

Popular Products	Description	Product Web Page
MCP87xxx	The MCP87xxx family of high-speed MOSFETs have been designed to optimize the trade-off between ultra-low On-state resistance (Rds-on) and Gate Charge (Qg) to maximize power conversion efficiency in switched mode power supplies.	Click Here

High-Speed MOSFETs

- Very low $R_{ds\text{-}on}$ and gate charge (Q_g) rroduct
- Optimized for high-efficiency power conversion in high frequency converters (300kHz – 1MHz)

Product ID	Type	Config	Vds (V)	Vgs (V)	Rds_on @ 4.5V (mΩ-typ)	Qg (nC)	Package
MCP87022*	N	Single	25	+10/-8	2.2	25	5x6 DFN
MCP87030	N	Single	25	+10/-8	3	13.3	5x6 DFN
MCP87050*	N	Single	25	+10/-8	5	9	5x6 DFN
MCP87055*	N	Single	25	+10/-8	5.5	6	3.3x3.3 DFN
MCP87090	N	Single	25	+10/-8	9	4	5x6 DFN 3.3x3.3 DFN
MCP87130	N	Single	25	+10/-8	13	2.9	5x6 DFN 3.3x3.3 DFN

BACK

DC-DC Switching Regulator

Popular Products	Description	Web Page
MIC24051	This is a constant-frequency, synchronous buck regulator featuring a unique adaptive on-time control architecture. The device operates over an input supply range of 4.5V to 19V; provides a regulated output with up to 6A current; at an adjustable output voltage; with a guaranteed accuracy of ±1%; at a switching frequency of 600kHz.	Click Here
MIC24055	A constant-frequency, synchronous buck regulator featuring a unique adaptive on-time control architecture, this device can operate over an input supply range of 4.5V to 19V; provides a regulated output of up to 12A of output current; with an adjustable output voltage down to 0.8V and a guaranteed accuracy of ±1%; at a switching frequency of 600kHz.	Click Here
MCP16311/2	This is a compact, high-efficiency, fixed frequency PWM/PFM, synchronous step-down DC-DC converter in a 8-pin MSOP, or 2 x 3 TDFN package that can operate from input voltage sources up to 30V. Integrated features include a high-side and a low-side switch, fixed frequency Peak Current Mode Control, internal compensation, peak-current limit and over temperature protection.	Click Here
MIC24046	This device is a pin-programmable, high-efficiency, wide-input range, 5A, synchronous step-down regulator. It is perfectly suited for multiple-voltage rail application environments typically found in computing and telecommunication systems; can be configured by pin strapping the desired output voltage, switching frequency, and current-limit values. The pin-selectable switching frequency, valley-current-mode control technique, high-performance error amplifier, and external compensation allow for the best tradeoffs between high-efficiency and the smallest possible solution size.	Click Here

<< BACK to BLOCK DIAGRAM

DC-DC Linear Regulator

- **Function: Providing regulated, low-noise supply voltages (Vin>Vout) with minimal components**

Popular Products	Description	Product Web Page
MCP1703A	With 250 mA maximum output and input voltage capability of up to 16V, this device creates compact systems. This features a low 2 µA quiescent current for efficient operation at light load.	Click Here
MIC5239 30V LDO	This is a low quiescent current, µCap low-dropout regulator. With a maximum operating input voltage of 30V and a quiescent current of 23µA, it is ideal for supplying keep-alive power in systems with high voltage batteries.	Click Here
MIC29302A	This high-current, low-cost, low-dropout voltage regulator uses a proprietary Super βeta PNP® process with a PNP pass element. The 3A LDO regulator features low 450mV (full load) dropout voltage and very low ground current.	Click Here
MCP1754/5	This 16 volt, high PSRR voltage regulator provides up to 150 mA of current (or 300 mA for MCP1755) with short circuit current foldback. Simplified, low pin count versions of the of these devices are also available.	MCP1754 MCP1755
MIC550X	Simple, effective 5.5V input LDO in the extremely compact 1x1 DFN.	Click Here

<< BACK to BLOCK DIAGRAM

DC-DC Power Modules

- **Function: Fully integrated DC-DC conversion, with integrated magnetics, for compact, fast, thermally efficient, low EMI system development**

Popular Products	Input Voltage Range	Maximum Output Current	Output Voltage	Package	Product Web Page
MIC45116	4.75V to 20V	6A	Adjustable	8mm x 8mm x 3mm QFN	Click Here
MIC45205	4.5V to 26V	6A	Adjustable	8mm x 8mm x 3mm QFN	Click Here
MIC45208	4.5V to 26V	10A	Adjustable	10mm × 10mm × 4mm QFN	Click Here
MIC45212	4.5V to 26V	14A	Adjustable	12mm × 12mm × 4mm QFN	Click Here

Winning Attributes

<< BACK to BLOCK DIAGRAM

DC-DC Power Modules

- **Attributes:**
  - Fast transient response
  - Enhanced thermal response packaging
  - Low EMI

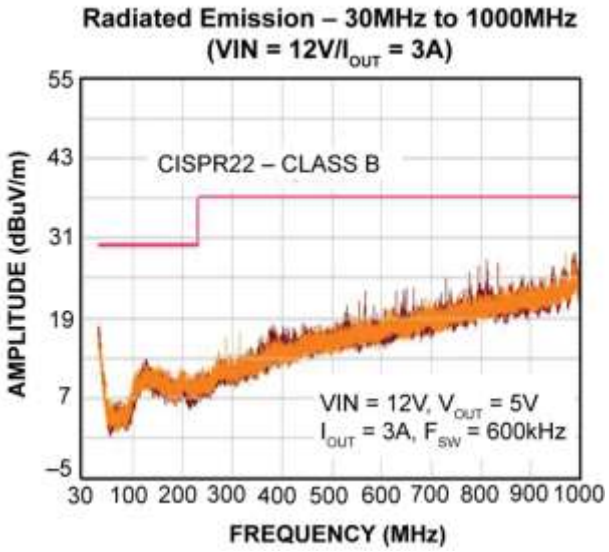

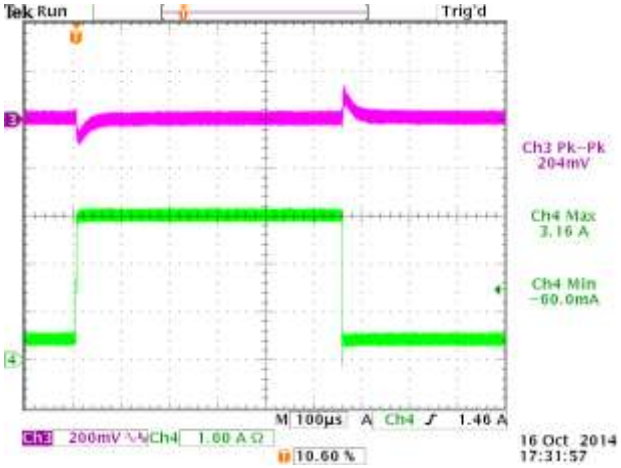

VIN =24V ,VOUT = 5V @ 3A

12mm x 12mm x 3mm

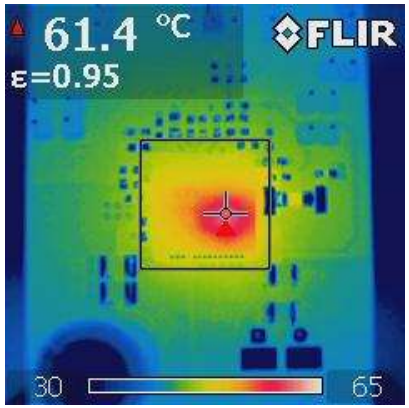

BACK

DDR Terminators

Popular Products	Description	Product Web Page
MIC5162	The MIC5162 is a dual regulator controller designed for high-speed bus termination. It offers a simple, low-cost JEDECcompliant solution for terminating high-speed, low-voltage digital buses (i.e. DDR, DD2, DDR3, SCSI, GTL, SSTL, HSTL, LV-TTL, Rambus, LV-PECL, LV-ECL, etc).	Click Here
MIC5165	he MIC5165 is a dual regulator controller designed specifically for low-voltage memory termination applications such as DDR3 and GDDR3/4/5. The MIC5165 offers a simple, low-cost JEDEC-compliant solution for terminating high-speed, low-voltage digital buses with a Power Good (PG) signal.	Click Here
MIC5166	The MIC5166 is a 3A, high-speed, linear, low VIN, double data rate (DDR), memory terminator power supply. The part is small and requires small output capacitors making it a tiny overall solution. This allows it to be conveniently placed close to the DDR memory, minimizing circuit board layout inductance which may cause excessive voltage ripple at the DDR memory.	Click Here
MIC5167	The MIC5167 is a high-efficiency, 6A, integrated switch, synchronous buck (step-down) regulator designed for use as a double data rata (DDR) or quad data rate (QDR) terminator. The MIC5167 is optimized for highest efficiency, achieving more than 94% efficiency while still switching at 1MHz over a broad range.	Click Here

<< BACK to BLOCK DIAGRAM

Personal Video Recorders (Set-Top Box)

<< BACK to CONTENTS

NEXT

Microchip's Winning Attributes

- Large offering of LDO and Resets covering needed voltages
- Heat reducing DC to DC converters at needed voltages
- RR-I/O Op Amps reduce design concerns
- Attach sell with PICmicro often used in Set-Top Box for system control and power management
- Wide product offering for minimizing customer's transaction and inventory costs
- Great lead times and customer support

NEXT

Set-Top Box

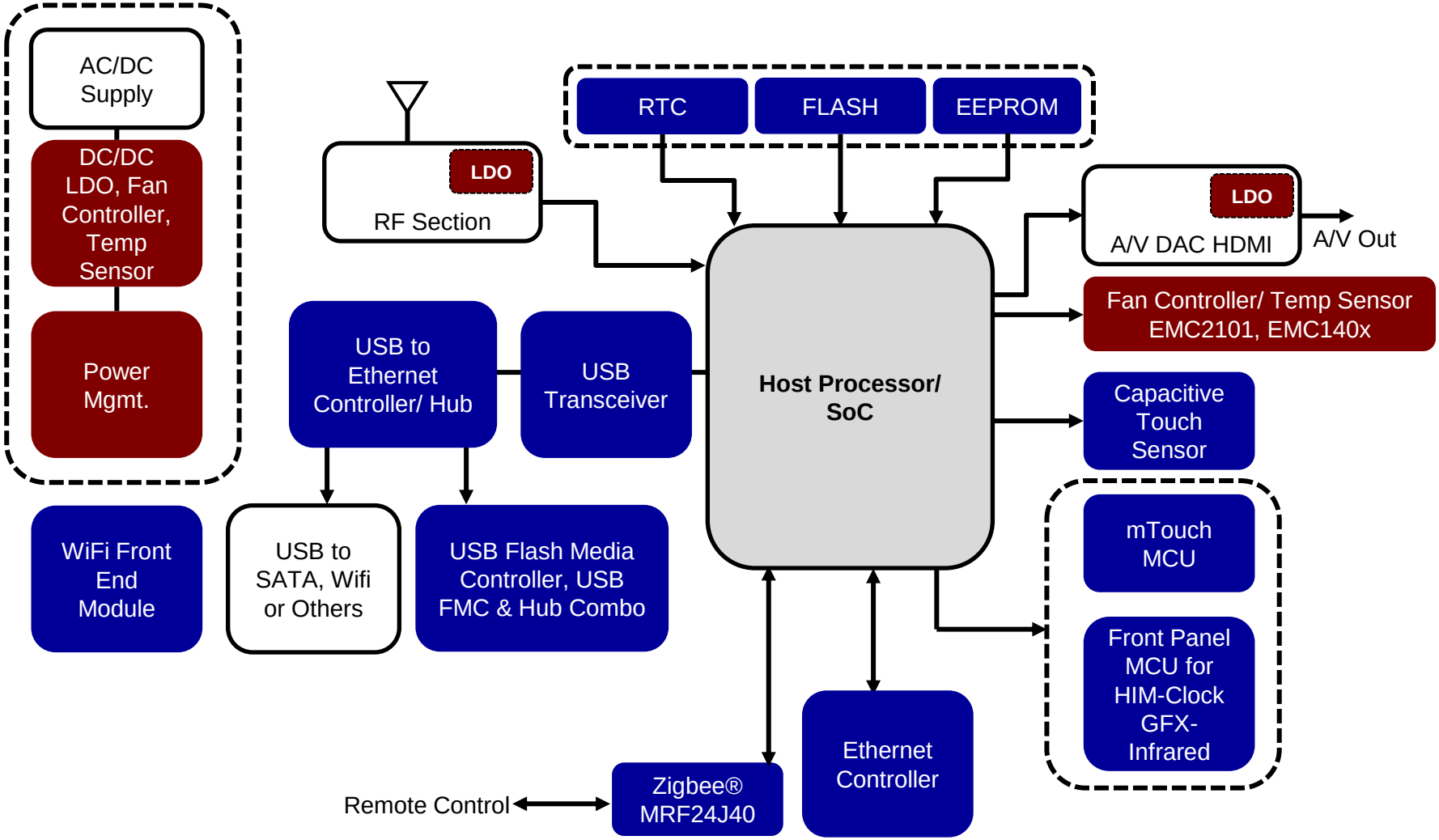

<< BACK to CONTENTS

Low Noise High PSRR LDO

Popular Products	Description	Product Web Page
MCP1754	The MCP1754/5 is a 16 volt, high PSRR voltage regulator with short circuit current foldback. The MCP1754 regulator provides up to 150 mA of current. The MCP1755 regulator provides up to 300 mA of current. The input operating voltage range is specified from 3.6V to 16V continuous, 18V absolute maximum, 12 VDC systems. Simplified, low pin count versions of the of these devices are also available	Click Here
MCP1755		Click Here

<< BACK to BLOCK DIAGRAM

RTC/ Memory

Function	Popular Products	Description	Product Web Page
Real Time Clock	MCP79410	The MCP79410 general purpose I2C™Compatible real-time clock/calendar (RTCC) is highly integrated with nonvolatile memory and advanced features normally found in higher priced devices. These features include a battery switchover circuit for backup power, a timestamp to log power failures and digital trimming for accuracy.	Click Here
EEPROM	24LC256	24AA256/24LC256/24FC256 (24XX256*) is a 32K x 8 (256 Kbit) Serial Electrically Erasable PROM, capable of operation across a broad voltage range (1.7V to 5.5V).	Click Here
FLASH	SST2xVF032x SST2xVF064x	The 25 Series SPI family is among the industry's lowest power 3.0V and 1.8V products. Lower pin count means less space, smaller PCBs, reduced system costs and lower power consumption. The industry's fastest erase times mean cost savings during manufacturing.	Click Here

<< BACK to BLOCK DIAGRAM

Fan Controller/ Temp Sensor

Function	Popular Products	Description	Product Web Page
Fan Controller	EMC2101	SMBus Fan Control with 1°C Accurate Temperature Monitoring	Click Here
Temperature Sensor	EMC140x	1°C Temperature Sensor with Beta Compensation	Click Here

<< BACK to BLOCK DIAGRAM

Capacitive Touch Solutions

Function	Popular Products	Description	Product Web Page
Capacitive Touch Solutions	CAP11/12xx	These devices have been carefully designed to filter for common noise sources such as backlight inverters, DC-DC switching regulators and wireless frequencies. They support a wide variety of interfaces such as I2C, SMBus, SMSC BC-Link™ and SPI and also provide world-class ESD protection of ±8kV HBM with no external ESD protection circuits required.	Click Here

<< BACK to BLOCK DIAGRAM

mTouch and Input Sensing Solutions

Popular Products	Description	Product Web Page
AR10xx	The Microchip mTouch™ AR1000 Series Resistive Touch Screen Controller is a complete, easy to integrate, cost-effective and universal touch screen controller chip solution. The AR1000 Series has sophisticated proprietary touch screen decoding algorithms to fully process all touch data and save the host from this overhead. More than the usual "preprocessing" features of other low cost devices, the AR1000 delivers reliable, validated and calibrated touch	Click Here
MTCH6301	The MTCH6301 is a turnkey projected capacitive touch controller that allows easy integration of multi-touch and gestures to create a rich user interface in your design.	Click Here

<< BACK to BLOCK DIAGRAM

USB Transceiver

Popular Products	Description	Product Web Page
USB334x	Highly Integrated, Hi-Speed USB 2.0 ULPI Transceiver Family for Consumer Electronics Applications	Click Here
USB333x	Ultra Small and Highly Integrated, Hi-Speed USB 2.0 ULPI Transceiver Family for Mobile Consumer Electronics Applications	Click Here

<< BACK to BLOCK DIAGRAM

USB Ethernet Controller or Hub

Popular Products	Description	Product Web Page
USB251x	USB251x is a family of versatile, cost-effective and power-efficient USB 2.0 hub controllers. Leveraging SMSC's innovative MultiTRAK™ technology that delivers industry-leading data throughput in mixed-speed USB environments, the USB251x family is designed for applications that demand low power and a small footprint without compromising on performance	Click Here
USB2602	4th Generation USB 2.0 Flash Media Controller with Integrated Card Power FETs and HS Hub	Click Here

<< BACK to BLOCK DIAGRAM

USB Flash Media Controller

Popular Products	Description	Product Web Page
USB224x	USB 2.0 Flash Media Card Controller with Integrated Card Power FETs	Click Here
USB264x	USB 2.0 Flash Media Controller with Integrated Card Power FETs and HS Hub	Click Here

<< BACK to BLOCK DIAGRAM

Ethernet Controller and Switches

Popular Products	Description	Product Web Page
LAN921x	High-Performance Small Form Factor Single-Chip Ethernet Controller with HP Auto-MDIX Support	Click Here
LAN922x	High-Performance Small Form Factor Single-Chip Ethernet Controller with 16-bit Non-PCI interface with Variable Voltage I/O	Click Here
LAN9303	3-port 10/100 Ethernet switch with flexible configuration options supporting a wide variety of different applications and architectures.	Click Here
LAN931x	3-port 10/100 Ethernet switch with flexible configuration options supporting a wide variety of different applications and architectures. Additional MII port provided to further expand customer use cases.	Click Here

<< BACK to BLOCK DIAGRAM

WiFi Front End Module

Popular Products	Description	Product Web Page
MRF24WG0MA/B	MRF24WB0MA is an agency certified IEEE 802.11 Wi-Fi radio transceiver module. The MRF24WB0MA has an integrated PCB antenna, matching circuitry, and supports Wi-Fi with the free TCP/IP protocol stack. The MRF24WB0MA Module connects to hundreds of PIC® microcontrollers via a 4-wire SPI interface and is an ideal solution for low-power, low data-rate Wi-Fi sensor networks, home automation, building automation and consumer applications.	Click Here

<< BACK to BLOCK DIAGRAM

Zigbee

Popular Products	Description	Product Web Page
MRF24WG0MA/B	MRF24J40 is a complete IEEE 802.15.4 radio and operates in the 2.4GHz freq band. The MRF24J40 supports ZigBee™, MiWi™ protocols and proprietary protocols to provide an ideal solution for wireless sensor networks, home automation, building automation and consumer applications	Click Here
PIC18F46J50	This low power and high performance 8-bit MCU with integrated full-speed USB 2.0 and peripheral flexibility comes in a small package for cost sensitive applications in the PIC18 J-series. New features include Deep sleep mode for low power applications, Peripheral Pin Select for design flexibility for mapping peripherals to I/O pins and a CTMU module for easy capacitive touch user interfaces. The PIC18F46J50 family is ideal for applications requiring cost-effective, low-power USB solutions with a robust peripheral set in a small package.	Click Here

<< BACK to BLOCK DIAGRAM

Power Management for Set-Top box

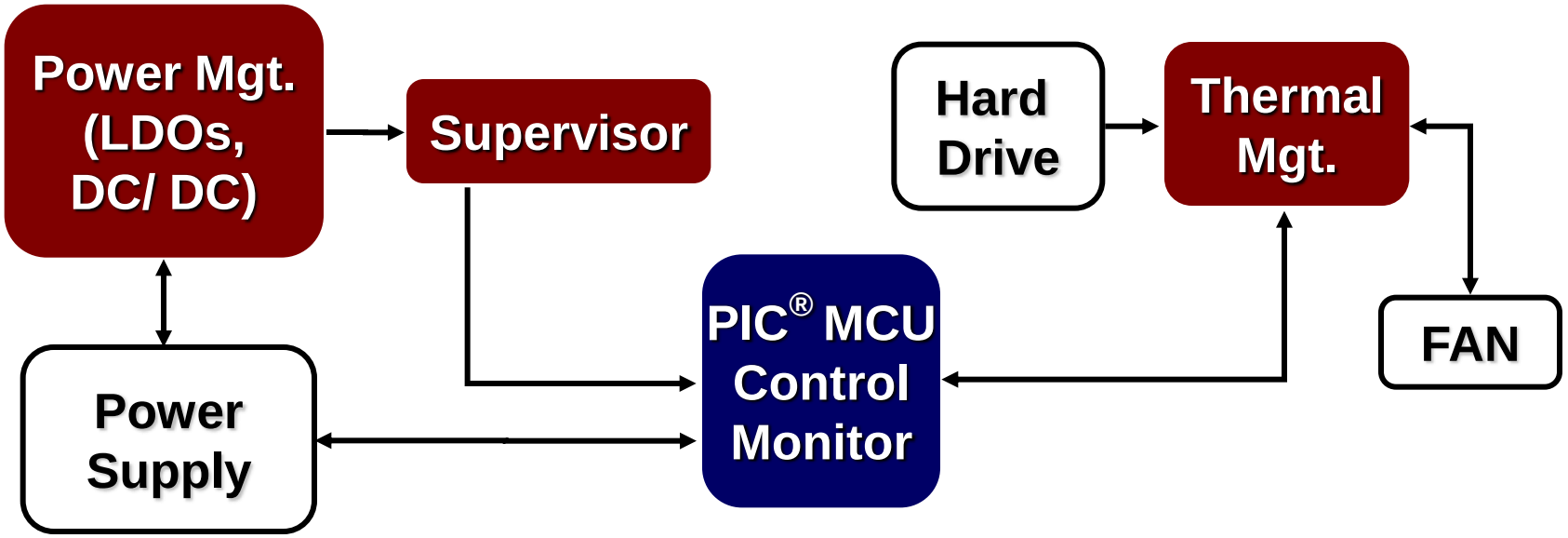

<< BACK to CONTENTS
<< BACK to BLOCK DIAGRAM

PIC Microcontrollers

- **Function: coordinating all the control, some peripheral functions and monitor functions - the brain of the system**
- **Popular products: PIC16F15XX, 182X, 193X**
- **Attributes:**
  - Up to 32 MHz operating speed
  - On board CCP, CLC, CWG, NCO
  - Integrated comparators, op-amp, 12-bit ADC, 5/8/9 bit DAC
  - Up to 256 bytes of EEPROM
  - Available in UQFN, QFN, PDIP, SOIC, and TSSOP packages

<< BACK to BLOCK DIAGRAM

1A- 1.5A Low Dropout Regulators

- **Function: converting 5V to low-noise 3.3V, 2.5V, or 1.8V voltage levels for the various system components**

Popular Products	Description	Product Web Page
MCP1727	The MCP1727 is a 1.5A, ceramic output cap stable, low output voltage Low Dropout Regulator (LDO) with shutdown and user-programmable delay for power good function.	Click Here
MIC37101	The MIC37101 is a 1.0A, ceramic output cap stable Low Dropout Regulator (LDO) with reverse battery and reverse current protection with power good function in SOIC-8 package	Click Here

NEXT: Switching Regulators >>

Winning Attributes

<< BACK to BLOCK DIAGRAM

1A- 1.5A Low Dropout Regulators

- **Attributes:**
  - Very low operating current: 80µA (typ)
  - High output voltage accuracy: ±2.5% (max)
  - Excellent dynamic performance (line & load regulation)
  - Very low dropout voltage: as low as 450mV @ 800mA (typ)
  - Package offering: SOT-223, SOIC, TO-220, DDPAK

BACK

Switching Regulators

Popular Products	Description	Product Web Page
MCP16311/2	The MCP16311/2 is a compact, high-efficiency, fixed frequency PWM/PFM, synchronous step-down DC-DC converter in a 8-pin MSOP, or 2 x 3 TDFN package that operates from input voltage sources up to 30V. Integrated features include a high-side and a low-side switch, fixed frequency Peak Current Mode Control, internal compensation, peak-current limit and over temperature protection. The MCP16311/2 provides all the active functions for local DC-DC conversion, with fast transient response and accurate regulation.	Click Here

Winning Attributes

<< BACK to BLOCK DIAGRAM

Switching Regulators

- **Attributes:**
  - Regulator and controller (external FET) solutions
  - Small SOT-23, MSOP and SOP packages
  - Auto-switching PWM/PFM operation
  - 300kHz and 750kHz switching frequency
  - UVLO, Soft-start & over-temperature protection
  - Efficiency as high as 95%
  - Very low operating current

BACK

RESET Monitors

- **Function: Reset the CPU and/or MCU when supply voltage falls below threshold**

Popular Products	Description	Product Web Page
MCP13xx	The MCP13xx voltage supervisors provide precision monitoring trip points, Watch Dog Timer inputs, Manual Reset with a low Supply current of 10 µA over extended temperature range from 1.0V to 5.5V supply.	Click Here
TCM809	The reset output is driven active within 20 µsec of VCC falling through the reset voltage threshold. Reset is maintained active for a minimum of 140msec after VCC rises above the reset threshold.	Click Here

Winning Attributes

<< BACK to BLOCK DIAGRAM

RESET Monitors

- **Attributes:**
  - Tiny SOT-23 and SC-70 packages
  - Very low operating current: as low as 10µA (max)
  - High threshold voltage accuracy: ±2.8% (max)
  - V_{DD} transient immunity
  - Watchdog Timer / manual reset (MCP13xx, TC1232)
  - Many available options: push-pull output, open-drain output and internal pull-up resistor

BACK

Temperature Sensors

- **Function: To Monitor temperature and initiate actions during over-temperature conditions**

Popular Products	Description	Product Web Page
TCN75	TCN75 is a serially programmable temperature sensor that notifies the host controller when ambient temperature exceeds a user-programmed setpoint. Hysteresis is also programmable.	Click Here
MCP9808 Digital temperature sensor	The MCP9808 converts temperatures between -20°C and +100°C to a digital word with ±0.5°C (max.) accuracy	Click Here

NEXT: Fan Managers >>

Winning Attributes

<< BACK to BLOCK DIAGRAM

Temperature Sensors

- **Attributes:**
  - Small SOT-23 and MSOP-8 packages
  - Very low operating current: 250µA (typ)
  - Very low shutdown current: 1µA (typ)
  - High temp accuracy: ±1°C (typ)
  - Simple operation: no need for external components
  - Analog and digital (SPI™, I²C™, SMBus™) devices

BACK

Fan Managers

- **Function: controlling fan speed according to ambient temperature for reducing acoustic noise and extending fan life**

Popular Products	Description	Product Web Page
TC652	The TC652/653 are integrated temperature sensors and brushless DC fan speed controllers with FanSense™ technology. The TC652/653 measure their junction temperature and control the speed of the fan based on that temperature, making them especially suited for applications in modern electronic equipment. The FanSense™ fan fault detect circuitry eliminates the need for a more expensive 3 wire fan.	Click Here

Winning Attributes

<< BACK to BLOCK DIAGRAM

Fan Managers

- **Attributes:**
  - Small MSOP packages
  - High temp accuracy: ±1°C (typ)
  - Fan failure detection
  - Very low power consumption
  - Wide range of features: SMBus™ Interface, Auto-shutdown, Minimum fan speed, Over-temp indication, etc.

BACK

Operational Amplifiers

Function: buffering and filtering signals

Popular Products	Description	Product Web Page
MCP6004	The MCP6004 is a quad general purpose op amp offering rail-to-rail input and output over the 1.8 to 6V operating range. This amplifier has a typical GBWP of 1 MHz with typical quiescent current of 100 microamperes.	Click Here
MCP6H04	MCP6H04 has a wide supply voltage range of 3.5V to 16V and rail-to-rail output operation. This device has a gain bandwidth product of 1.2 MHz (typical), while only drawing 135 µA/amplifier (typical) of quiescent current.	Click Here
MCP6294	MCP6294 provide wide bandwidth of 10 MHz Gain Bandwidth Product. This family also operates from a single supply voltage as low as 2.4V to 6V, while drawing 1 mA (typical) quiescent current.	Click Here

Winning Attributes

<< BACK to BLOCK DIAGRAM

Operational Amplifiers

- **Attributes:**
  - Small SC-70, TDFN and SOT-23 packages
  - GBWP: 9 kHz to 60MHz
  - Excellent operating current-to-GBWP ratio
  - Mostly rail-to-rail inputs and outputs
  - Offset voltage: as low as 2µV (MCP6V0x)
  - Chip Select capability for power savings

BACK

Analog-to-Digital Converters

- **Function: implementing Automatic Gain Control (AGC) for the tuner - frequency adjustment**

Popular Products	Description	Product Web Page
MCP3221	The MCP3221 is a 12-bit SAR A/D converter. Available in the SOT-23 package, the MCP3221 provides a low max. conversion current and standby current of 250 µA and 1 µA respectively. Communication to the MCP3221 is performed using a 2-wire I2C™ Compatible interface. The MCP3221 runs on a single supply voltage range of 2.7 V to 5.5 V.	Click Here
MCP3201	The MCP3201 12-bit Analog-to-Digital Converter (ADC) combines high performance and low power consumption in a small package, making it ideal for embedded control applications. The MCP3201 features SAR architecture and a SPI serial interface, allowing 12-bit ADC capability to be added to any PIC® microcontroller. The MCP3201 features 100k samples/second, 1 input channel, low power consumption (5nA typical standby, 400µA max. active).	Click Here

Winning Attributes

<< BACK to BLOCK DIAGRAM

Analog-to-Digital Converters

- **SAR Attributes:**
  - Resolution: 8 to 13 bits
  - Max sampling rate: up to 200 ksps
  - Linearity: ±1LSB DNL, ±1LSB INL
  - Current consumption: 175 to 500µA (max.)
  - Single supply voltage: 2.7V to 5.5V
  - Small packages: SOT-23 and MSOP
- **Delta-Sigma Attributes:**
  - Resolution: 16 to 22 bits
  - Max sampling rate: up to 240 sps
  - Current consumption: 120 to 155 µA (max.)
  - Single supply voltage: 2.7V to 5.5V
  - Small packages: SOT-23 and MSOP

BACK

Microchip Analog Products for Medical Applications

<< BACK to CONTENTS
NEXT

Microchip's Winning Attributes

- Large offering of LDO and Resets covering needed voltages
- RR-I/O op amps reduce design concerns
- High Precision Operational Amplifiers
- Low Power consumption
- Attach sell with PICmicro, frequently used
- Great lead times and customer support

ECG/EKG Block Diagram

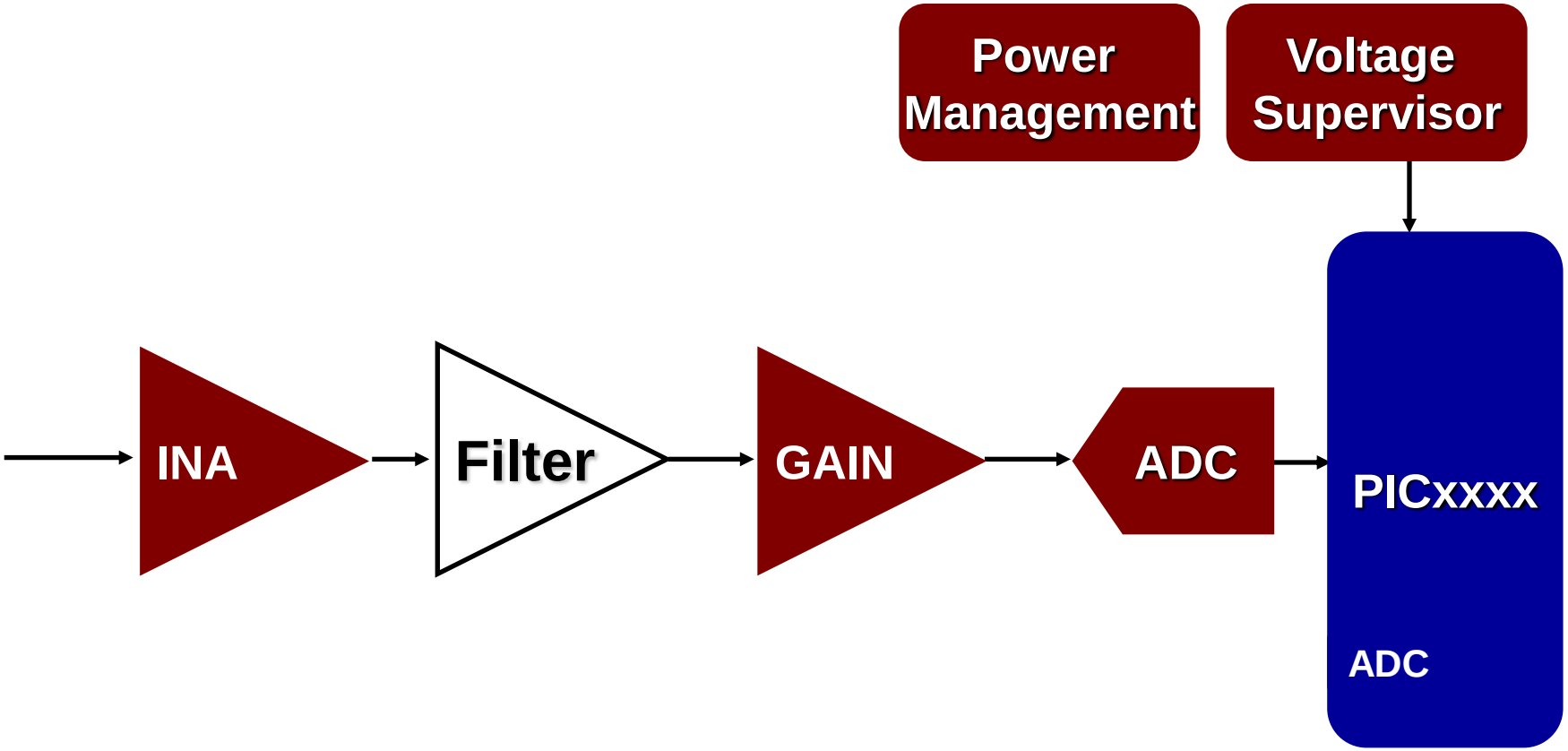

PIC Microcontrollers

- **Function: coordinating all the control, some peripheral functions and monitor functions - the brain of the system**
- **Popular products: PIC16F178X, 75X, 15XX**
- **Attributes:**
  - Up to 32 MHz operating speed
  - PWM output (PIC1XF75X)
  - Integrated hi-speed, comparators, op-amp, 12-bit ADC, 5/8/9 bit DAC, CCP, COG
  - Up to 256 bytes of EEPROM
  - Available in UQFN, QFN, PDIP, SOIC, and TSSOP packages

<< BACK to BLOCK DIAGRAM

Instrumentation Amplifiers

- **Function: buffering and filtering sensor signals for preserving signal characteristics and rejecting unwanted frequencies**

Popular Products	Description	Product Web Page
MCP6N16	The MCP6N16 is a zero-drift instrumentation amplifier designed for single-supply operation with rail-to-rail input (no common mode crossover distortion) and output performance. The supply voltage range is low enough to support many portable applications. All devices are fully specified from -40ºC to +125ºC. Each device has EMI filters at the input pins, providing superior EMI rejection. This family has three minimum gain options (1, 10 and 100 V/V) in order to allow the user to optimize the input offset voltage and input noise for different applications	Click Here

<< BACK to BLOCK DIAGRAM

Operational Amplifiers

Function: Provide gain to small signals

Popular Products	Description	Product Web Page
MCP603x	The MCP6031/2/3/4 op amps have a gain bandwidth of 10 kHz with a low typical operating current of 0.9 µA and an offset voltage that is less than 150 µV.	Click Here
MCP6V11 Zero Drift Op Amps	Gain-Bandwidth Product: 80 kHz, Offset Voltage: ±8 µV (max.), IQ: 11 µA (typ.), Wide Supply Voltage Range: 1.6V to 5.5V	Click Here
MCP6444	The MCP6444 is a quad general purpose op amp offering rail-to-rail input and output over the 1.8 to 6V operating range. This amplifier has a typical GBWP of 9 kHz with typ. quiescent current of 450 nA .	Click Here
MCP60x	MCP601/2/3/4 (op amp) has a gain bandwidth product of 2.8 MHz with low typical operating current of 230 µA and an offset voltage that is less than 2 mV.	Click Here

<< BACK to BLOCK DIAGRAM

Analog-to-Digital Converters

- **Function: converting analog feedback signals to digital signals for MCU**

Popular Products	Description	Product Web Page
MCP3221	The MCP3221 is a 12-bit SAR A/D converter. Available in the SOT-23 package, the MCP3221 provides a low max. conversion current and standby current of 250 µA and 1 µA respectively. Communication to the MCP3221 is performed using a 2-wire I2C™ Compatible interface. The MCP3221 runs on a single supply voltage range of 2.7 V to 5.5 V.	Click Here
MCP3201	The MCP3201 12-bit Analog-to-Digital Converter (ADC) combines high performance and low power consumption in a small package, making it ideal for embedded control applications. The MCP3201 features SAR architecture and a SPI serial interface, allowing 12-bit ADC capability to be added to any PIC® microcontroller. The MCP3201 features 100k samples/second, 1 input channel, low power consumption (5nA typical standby, 400µA max. active).	Click Here

<< BACK to BLOCK DIAGRAM

Low-Power LDOs

- **Function: providing regulated, low-noise supply voltages for the system**

Popular Products	Description	Product Web Page
MCP1700	The MCP1700 can source up to 250mA of current with an extremely low input-output voltage differential of 178mV at 250mA. with the low current consumption of only	Click Here
TC1016	80mA , LDO With Shutdown in SC70	Click Here
MIC94325	• Ripple Block family – Active noise rejection over a wide frequency band: >50dB from 10Hz to 5Mhz at 500mA load • Rated to 500mA output current • Fixed and adjustable output voltage • Optional output auto-discharge when disabled • Current-limit and thermal-limit protected • Available in Ultra-small 0.84mm x 1.32mm 6-ball CSP and 1.6mm x 1.6mm 6-pin Thin DFN • Logic-controlled enable pin	Click Here
MIC2215	• Triple outputs, -70dB PSRR@ 1kHz, -40dB PSRR @ 1Mhz • Input voltage range: +2.25V to +5.5V • 250mA continuous current per output • Low quiescent current: 110uA per regulator • Current-limit protection. Available in tiny 16-pin 4mm x 4mm MLF package	Click Here

<< BACK to BLOCK DIAGRAM

RESET Monitors

- **Function: Reset the CPU and/or MCU when supply voltage falls below threshold**

Popular Products	Description	Product Web Page
MCP13xx	The MCP13xx voltage supervisors provide precision monitoring trip points, Watch Dog Timer inputs, Manual Reset with a low Supply current of 10 µA over extended temperature range from 1.0V to 5.5V supply.	Click Here
TCM809	The reset output is driven active within 20 µsec of VCC falling through the reset voltage threshold. Reset is maintained active for a minimum of 140msec after VCC rises above the reset threshold.	Click Here

<< BACK to BLOCK DIAGRAM

Blood Glucose Block Diagram

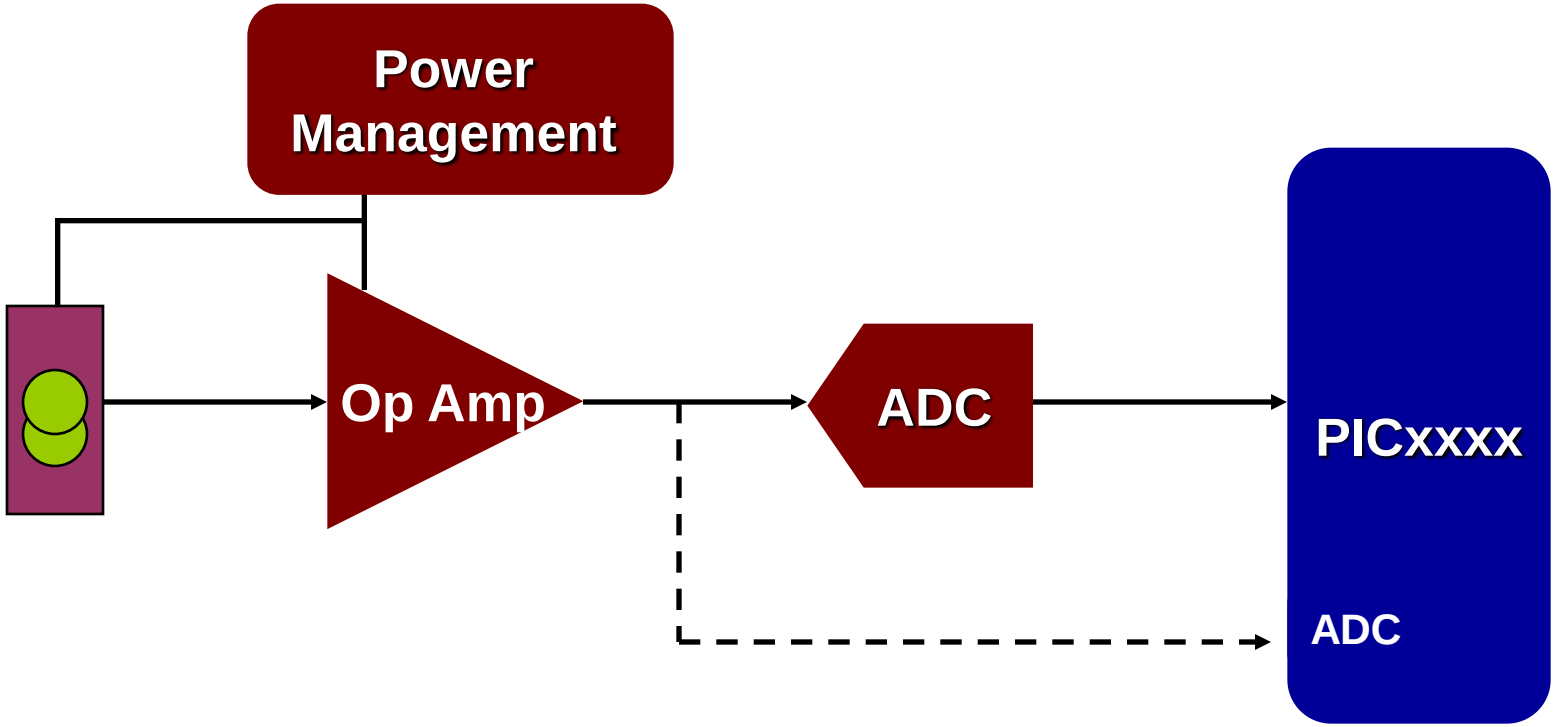

PIC Microcontrollers

- **Function: coordinating all the control, some peripheral functions and monitor functions - the brain of the system**
- **Popular products: PIC16F178X, 75X, 15XX**
- **Attributes:**
  - Up to 32 MHz operating speed
  - PWM output (PIC1XF75X)
  - Integrated hi-speed, comparators, op-amp, 12-bit ADC, 5/8/9 bit DAC, CCP, COG
  - Up to 256 bytes of EEPROM
  - Available in UQFN, QFN, PDIP, SOIC, and TSSOP packages
  - 8-pin solutions (PIC12F752)

<< BACK to BLOCK DIAGRAM

Power Management

- **Function: providing regulated, low-noise supply voltages for the system**

Popular Products	Description	Product Web Page
MCP1700	The MCP1700 can source up to 250mA of current with an extremely low input-output voltage differential of 178mV at 250mA. with the low current consumption of only	Click Here
TC1016	80mA , LDO With Shutdown in SC70	Click Here
MCP16251/2	The MCP16251/2 is a compact, high-efficiency, fixed frequency, synchronous step-up DC-DC converter. This family of devices provides an easy-to-use power supply solution for applications powered by either one-cell, two-cell or three-cell alkaline, NiCd, NiMH and one-cell Li-Ion or Li-Polymer batteries.	Click Here
MIC94325	• Ripple Block family – Active noise rejection over a wide frequency band: >50dB from 10Hz to 5Mhz at 500mA load • Rated to 500mA output current. Fixed and adjustable output voltage • Optional output auto-discharge when disabled. Logic-controlled enable pin • Current-limit and thermal-limit protected • Available in Ultra-small 0.84mm x 1.32mm 6-ball CSP and 1.6mm x 1.6mm 6-pin Thin DFN	Click Here
MIC2215	• Triple outputs, -70dB PSRR@ 1kHz, -40dB PSRR @ 1Mhz • Input voltage range: +2.25V to +5.5V, 250mA continuous current per output • Low quiescent current: 110uA per regulator • Current-limit protection. Available in tiny 16-pin 4mm x 4mm MLF package	Click Here

Voltage References

<< BACK to BLOCK DIAGRAM

Voltage References

- **Function: providing the system with an accurate analog voltage for comparison**

Popular Products	Description	Product Web Page
MCP1525/41	MCP1525/41 is a low power, high precision voltage reference. It provides a precise output voltage of 4.096V which is then compared to other voltages in the system.	Click Here
MCP1501	The MCP1501 is a high-precision buffered voltage reference with an initial accuracy of 0.10% and is available in 8 voltage options. The MCP1501 is a low-drift bandgap-based reference and uses chopper-based amplifiers which significantly reduces the drift and provides high current output.	Click Here

<< BACK to BLOCK DIAGRAM

Operational Amplifiers

Popular Products	Description	Product Web Page
MCP603x	The MCP6031/2/3/4 op amps have a gain bandwidth of 10 kHz with a low typical operating current of 0.9 µA and an offset voltage that is less than 150 µV.	Click Here
MCP6444	The MCP6444 is a quad general purpose op amp offering rail-to-rail input and output over the 1.8 to 6V operating range. This amplifier has a typical GBWP of 9 kHz with typ. quiescent current of 450 nA .	Click Here
MCP60x	MCP601/2/3/4 (op amp) has a gain bandwidth product of 2.8 MHz with low typical operating current of 230 µA and an offset voltage that is less than 2 mV.	Click Here
MCP6Vxx Family of Zero-Drift Amplifiers	The MCP6Vxx provides high DC precision, including an offset voltage as low as 2µV and offset drift as low as 15nV/°C maximum. They have low quiescent current, no 1/f noise and offer superior CMRR/PSRR performance. The family has an operating voltage as low as 1.6V and are available in small packages (SC-70 and DFN)	Zero-Drift Amplifiers
MCP6Nxx Family of Instrumentation Amplifiers	Microchip expanded its portfolio of amplifiers by first introducing the MCP6N11 the industry's first instrumentation amplifier featuring mCal technology and most recently introducing the MCP6N16 Zero-Drift instrumentation amplifier. • Rail-to-Rail Input and Output • Gain Set by two (2) External Resistors • Enable/Vos Calibration Pin (MCP6N11) • Zero-Drift Architecture (MCP6N16) • Operating Voltage Range: 1.8V to 5.5V	Instrumentation Amplifiers

<< BACK to BLOCK DIAGRAM

Analog-to-Digital Converters

- **Function: converting analog feedback signals to digital signals for MCU**

Popular Products	Description	Product Web Page
MCP3221	The MCP3221 is a 12-bit SAR A/D converter. Available in the SOT-23 package, the MCP3221 provides a low max. conversion current and standby current of 250 µA and 1 µA respectively. Communication to the MCP3221 is performed using a 2-wire I2C™ Compatible interface. The MCP3221 runs on a single supply voltage range of 2.7 V to 5.5 V.	Click Here
MCP3421	The MCP3421 is a single channel low-noise, high accuracy Delta-Sigma A/D converter with differential inputs and up to 18 bits of resolution in a small SOT-23-6 package. The device uses a two-wire I2C™ compatible serial interface and operates from a single power supply ranging from 2.7V to 5.5V.	Click Here

<< BACK to BLOCK DIAGRAM

Digital Thermometer

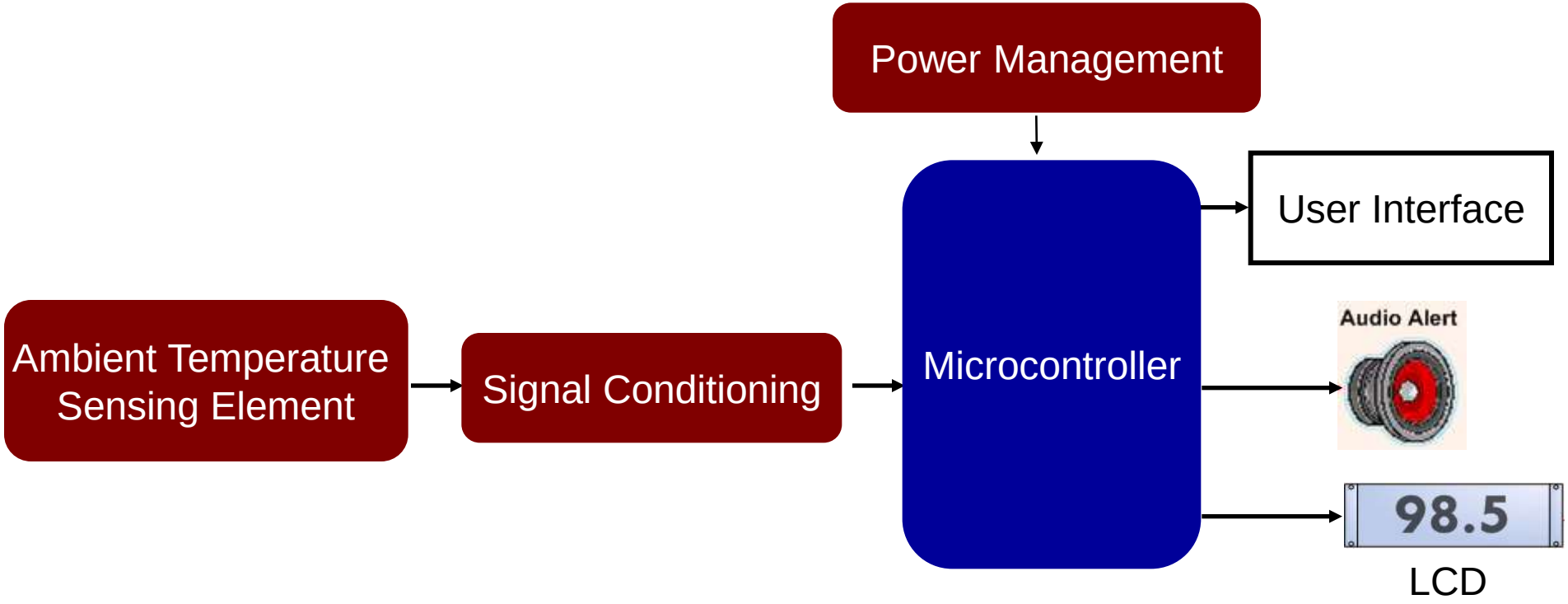

Signal Conditioning

- **Microchip offers high resolution SAR and Delta-Sigma ADC and a wide range of high bandwidth, low current and cost effective operational amplifiers**

Popular Products	Description	Product Web Page
MCP6231/2/4	MCP6231/1R/1U/2/4 - Family of operational amplifiers Gain Bandwidth Product: 300 kHz (typical), Low Supply Current: = 20 µA (typical), Wide Supply Voltage: 1.8V to 6.0V	Click Here
MCP3421	The MCP3421 is a single channel low-noise, high accuracy Delta-Sigma A/D converter with differential inputs and up to 18 bits of resolution in a small SOT-23-6 package. The device uses a two-wire I2C™ compatible serial interface and operates from a single power supply ranging from 2.7V to 5.5V.	Click Here

<< BACK to BLOCK DIAGRAM

Power Management

- **Function: providing regulated, low-noise supply voltages for the system**

Popular Products	Description	Product Web Page
MCP1700	The MCP1700 can source up to 250mA of current with an extremely low input-output voltage differential of 178mV at 250mA. with the low current consumption of only	Click Here
TC1016	80mA , LDO With Shutdown in SC70	Click Here
MCP16251/2	The MCP16251/2 is a compact, high-efficiency, fixed frequency, synchronous step-up DC-DC converter. This family of devices provides an easy-to-use power supply solution for applications powered by either one-cell, two-cell or three-cell alkaline, NiCd, NiMH and one-cell Li-Ion or Li-Polymer batteries.	Click Here
MIC94325	• Ripple Block family – Active noise rejection over a wide frequency band: >50dB from 10Hz to 5Mhz at 500mA load • Rated to 500mA output current. Fixed and adjustable output voltage • Optional output auto-discharge when disabled. Logic-controlled enable pin • Current-limit and thermal-limit protected • Available in Ultra-small 0.84mm x 1.32mm 6-ball CSP and 1.6mm x 1.6mm 6-pin Thin DFN	Click Here
MIC2215	• Triple outputs, -70dB PSRR@ 1kHz, -40dB PSRR @ 1Mhz • Input voltage range: +2.25V to +5.5V, 250mA continuous current per output • Low quiescent current: 110uA per regulator • Current-limit protection. Available in tiny 16-pin 4mm x 4mm MLF package	Click Here

<< BACK to BLOCK DIAGRAM

Thermal Compensation

- **In many cases ambient temperature compensation requires a second**

Popular Products	Description	Product Web Page
MCP9808 Digital temperature sensor	The MCP9808 converts temperatures between -20°C and +100°C to a digital word with ±0.5°C (max.) accuracy	Click Here
MCP9700 Linear Active Thermistor™ ICs	The output voltage of this device is directly proportional to measured temperature. The MCP9700 can accurately measure temperature from -40C to +150C with the output calibrated to a slope of 10mV/°C and has a DC offset of 500mV.	Click Here

<< BACK to BLOCK DIAGRAM

PIC Microcontrollers

- **Function: coordinating all the control, some peripheral functions and monitor functions - the brain of the system**
- **Popular products: PIC16F193X, PIC18F65J90/94**
- **Attributes:**
  - Up to 32 MHz operating speed
  - PWM output (PIC16F193X)
  - Integrated LCD controller, up to 256 segments
  - Integrated comparators, op-amp, 12-bit ADC, 5/8/9 bit DAC
  - Up to 256 bytes of EEPROM

<< BACK to BLOCK DIAGRAM

Medical Ultrasound Imaging System Block Diagram

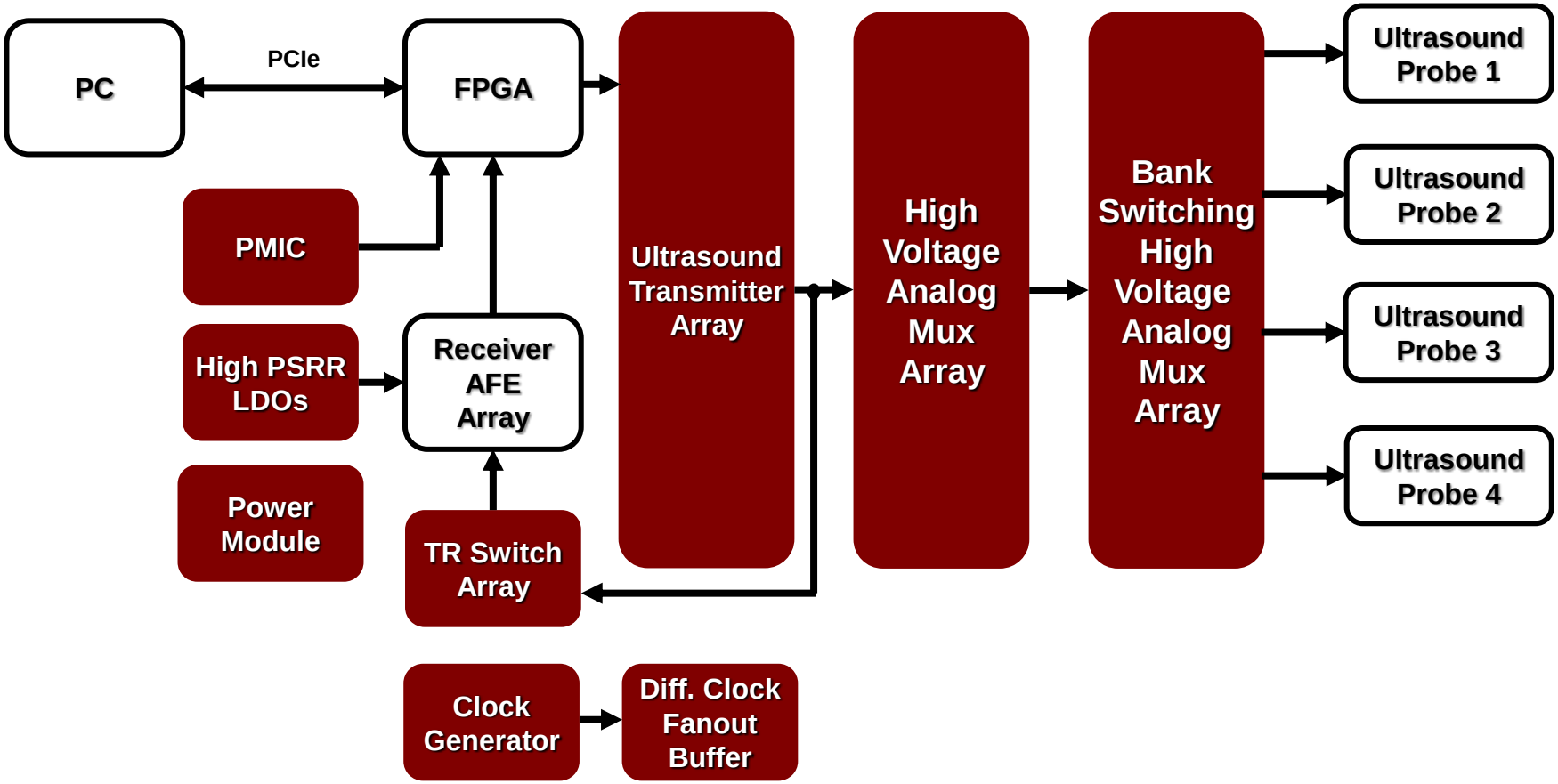

Digital Thermometer | Blood Glucose Meter | ECG/EKG System | << BACK to CONTENTS

High Voltage Analog Mux – Bank Switching / Mechanical Relay replacement

- **Function: Ultrasound probe selection relay replacement**

Popular Product	Description	Product Web Page
HV2809	HV2809 is a low harmonic distortion, 32-channel, high voltage analog switch IC, designed for use in medical ultrasound imaging systems as a probe selection relay replacement. It serves as a 16PDT (16-pole, double throw) high voltage analog switch array. The enable function allows the parts to be configured as either a 2:1 or 4:1 multiplexer/demultiplexer. HV2809 is a very fast transducer multiplexer that consumes minimal power and emits no audible noise.	Click Here

<< BACK to BLOCK DIAGRAM

High Voltage Analog Mux

- **Function: Multiplexing the ultrasound signals to the ultrasound probe**

Popular Products	Description	Product Web Page
HV2902	HV2902 is low-charge injection, **32-channel SPST**, high-voltage analog switches intended for use in applications requiring high-voltage switching controlled by low-voltage control signals, such as medical ultrasound imaging, driving piezoelectric transducers and printers. The HV2902 has integrated bleed resistors which eliminate voltage build-up on capacitive loads such as piezoelectric transducers.	Click Here
HV2901	The HV2901 is a low charge injection **32-channel** high voltage analog switch integrated circuit (IC) in **2:1 Mux configuration**, intended for use in applications requiring high voltage switching controlled by low voltage control signals, such as medical ultrasound imaging, piezoelectric transducer driver, and printers. The bleed resistors eliminate voltage built up on capacitive loads such as piezoelectric transducers.	Click Here
HV2705	The HV2705 are low charge injection, **16-channel SPST**, high voltage analog switch integrated circuits (ICs) with bleed resistors. The devices can be used in applications requiring high voltage switching controlled by low voltage control signals, such as medical ultrasound imaging and piezoelectric transducer drivers.	Click Here

<< BACK to BLOCK DIAGRAM

Ultrasound Transmitter

- **Function: Excites an array of piezo-electric transducer to emit the ultrasound waves.**

Popular Products	Description	Product Web Page
HV7351	The HV7351 is an eight channel monolithic high-voltage ultrasound transmitter with built-in programmable digital transmit-beamforming. Each channel is capable of operating the outputs up to +/-70V with an active discharge back to 0V. The outputs can source and sink up to 3.0A to achieve fast output rise and fall times. The active discharge is also capable of sourcing and sinking 3.0A for a fast return to ground.	Click Here
HV7350	The HV7350 is an eight channel monolithic high voltage high speed pulse generator with built-in fast return to zero damping FETs. This high voltage and high-speed integrated circuit is designed for portable medical ultrasound image devices. HV7350 consists of a controller logic interface circuit, level translators, MOSFET gate drives, and high current power P-channel and N-channel MOSFETs as the output stage for each channel. The output peak currents of each channel are guaranteed to be over ±1.0A with up to ±60V pulse swings as well as return-to-zero (RTZ) mode. The gate drivers for the output MOSFETs are powered by built-in linear 5.0V regulators referenced to VPP and VNN.	Click Here

<< BACK to BLOCK DIAGRAM

Transmit/Receive Switch

- **Function: Protect the low voltage receiver from the high voltage transmit pulses in ultrasound application**

Popular Products	Description	Product Web Page
MD0100	Single Channel (MD0100N8-G) or Dual Channel (MD0100DK6-G), Up to +/-100V input voltage protection, Low on resistance (15 Ohm Typical), Fast switching speed, No external supplies needed	Click Here
MD0101	4-Channel, Up to +/-100V input voltage protection, Low on resistance (15 Ohm Typical), Integrated clamp diodes, Fast switching speed, No external supplies needed.	Click Here
MD0105	4-Channel, Up to +/-130V input voltage protection, Low on resistance (15 Ohm Typical), Fast switching speed, No external supplies needed	Click Here

<< BACK to BLOCK DIAGRAM

Clock Generator

- **Function: Generating different clock frequency signals for FPGA, Receiver AFE, Transmitter IC, and PCIe.**

Popular Product	Description	Product Web Page
SM803xxx	• High performance customizable clock generator FLEX2 family • 200fs RMS phase jitter • Dual-PLL • Integrated Fanout Buffer - up to 12 Outputs • Independently programmable output logic and frequency • Output logic includes LVPECL, LVDS, HCSL, and LVCMOS	Click Here

<< BACK to BLOCK DIAGRAM

Diff. Clock Fanout Buffer

- **Function: Clock Fanout Buffer for driving the receiver AFE sampling clocks & the transmitter retiming clocks**

Popular Products	Description	Product Web Page

SY89826L	• High performance 1GHz LVDS fanout buffer/translator
	• 22 differential LVDS output pairs
	• Low jitter performance:
	  • <1 ps rms cycle-to-cycle jitter
	  • <1 ps pk-to-pk total jitter
	• 2:1 mux input accepts LVDS and LVPECL
	• Output enable function
	• 3.3V supply voltage
	• Available in a 64-Pin EPAD-TQFP package
		Click Here

<< BACK to BLOCK DIAGRAM

High PSRR LDOs

- **Function: Filter out the switching power supply's noise for the sensitive high performance analog circuit.**

Popular Products	Description	Product Web Page
MIC94325	• Ripple Block family – Active noise rejection over a wide frequency band: >50dB from 10Hz to 5Mhz at 500mA load • Rated to 500mA output current • Fixed and adjustable output voltage • Optional output auto-discharge when disabled • Current-limit and thermal-limit protected • Available in Ultra-small 0.84mm x 1.32mm 6-ball CSP and 1.6mm x 1.6mm 6-pin Thin DFN • Logic-controlled enable pin	Click Here
MIC2215	• Triple outputs, -70dB PSRR@ 1kHz, -40dB PSRR @ 1Mhz • Input voltage range: +2.25V to +5.5V • 250mA continuous current per output • Low quiescent current: 110uA per regulator • Current-limit protection. Available in tiny 16-pin 4mm x 4mm MLF package	Click Here
MIC49150	• 1.5A High PSRR LDO Regulator • VIN: 1.4V to 6.5V, VBIAS: 3.0V to 6.5V • Adjustable output voltage down to 0.9V • Logic controlled shutdown option. Thermal shutdown and current limit protection • High PSRR -50dB @ 1Mhz at full load • Available in Power MSOP-8 and S-Pack packages	Click Here

<< BACK to BLOCK DIAGRAM

PMIC

- **Function: Provide power to the FPGAs & the PC peripherals.**

Popular Product	Description	Product Web Page

MIC7401	Configurable PMIC, Five-Channel Buck Regulator + One-Boost with Hyperlight Load, I2C Control and Enable
	• Input Voltage: 2.4V to 5.5V
	• Five Independent synchronous bucks up to 3A
	• One independent non-synchronous boost up to 200 mA
	• 200 uA quiescent current (all regulators on)
	• I2C interface up to 3.4Mhz
	• I2C on-the-fly EEPROM programmability
	  • Buck and boost output voltage scaling
	  • Power-on-reset threshold and delay
	  • Power-up sequencing and sequencing delay
	  • Buck and Boost current limit
	  • Soft-start, ON/OFF, and standby mode…and more…
	• 36-pin 4.5mm x 4.5mm x 0.85mm FQFN package
	• 12mm x 8.5mm x 1.25mm solution size (see the eval board)
		Click Here

<< BACK to BLOCK DIAGRAM

Power Module

- **Function: Provide power to the PC Module and the digital circuitry**

Popular Products	Description	Product Web Page
MIC45208	• Wide input voltage range of 4.5V to 26V. Output voltage: 0.8V to 5.5V with +/- 1% accuracy • Up to 10A output current. No compensation required • Adjustable switching frequency from 200Khz to 600Khz • Enable input and open-drain power good output • Adjustable current limit • Available in 52-pin 10mm x 10mm x 4mm QFN package	Click Here
MIC45212-1/2	• Wide input voltage range of 4.5V to 26V. Output voltage: 0.8V to 5.5V with +/- 1% accuracy • Up to 14A output current. No compensation required • Adjustable switching frequency from 200Khz to 600Khz • Enable input and open-drain power good output • Adjustable current limit • Available in 64-pin 12mm x 12mm x 4mm QFN package	Click Here
MIC38300	• 3A High Efficiency Low Dropout regulator • Unique switcher + LDO architecture • 3A peak output current, 2.2A continuous operating current • Input voltage range: 3.0V to 5.5V, output noise less than 5mV • Available in 4mm x 6mm x 0.9mm MLF package	Click Here

<< BACK to BLOCK DIAGRAM

Microchip Analog Products for Smoke and CO Detectors

<< BACK to CONTENTS
NEXT

CO Detector

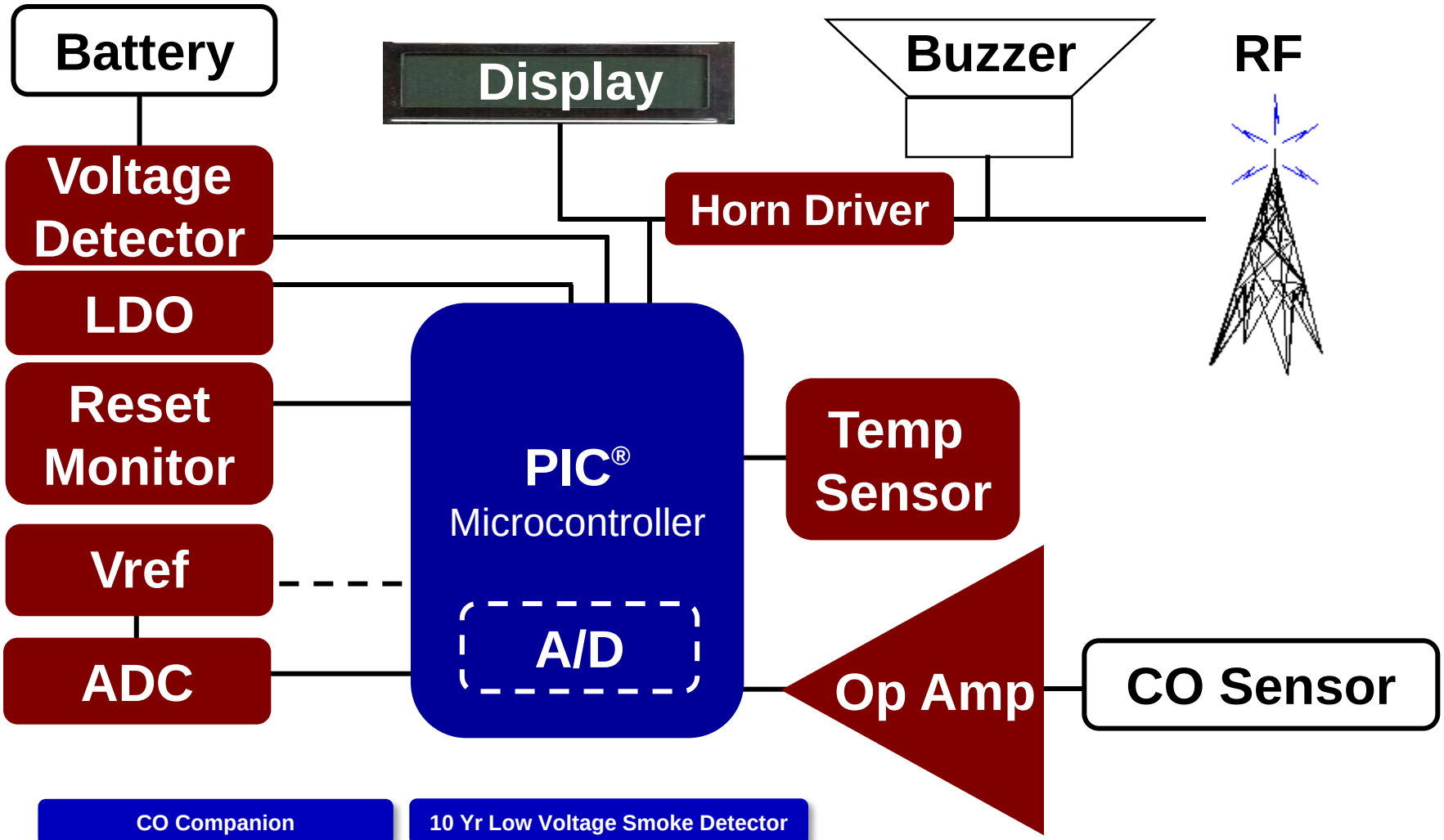

CO Companion
10 Yr Low Voltage Smoke Detector
Home Alarm Systems
Low Cost Smoke Detectors
Addressable Smoke Detectors
<< BACK to CONTENTS

Addressable Smoke Detector

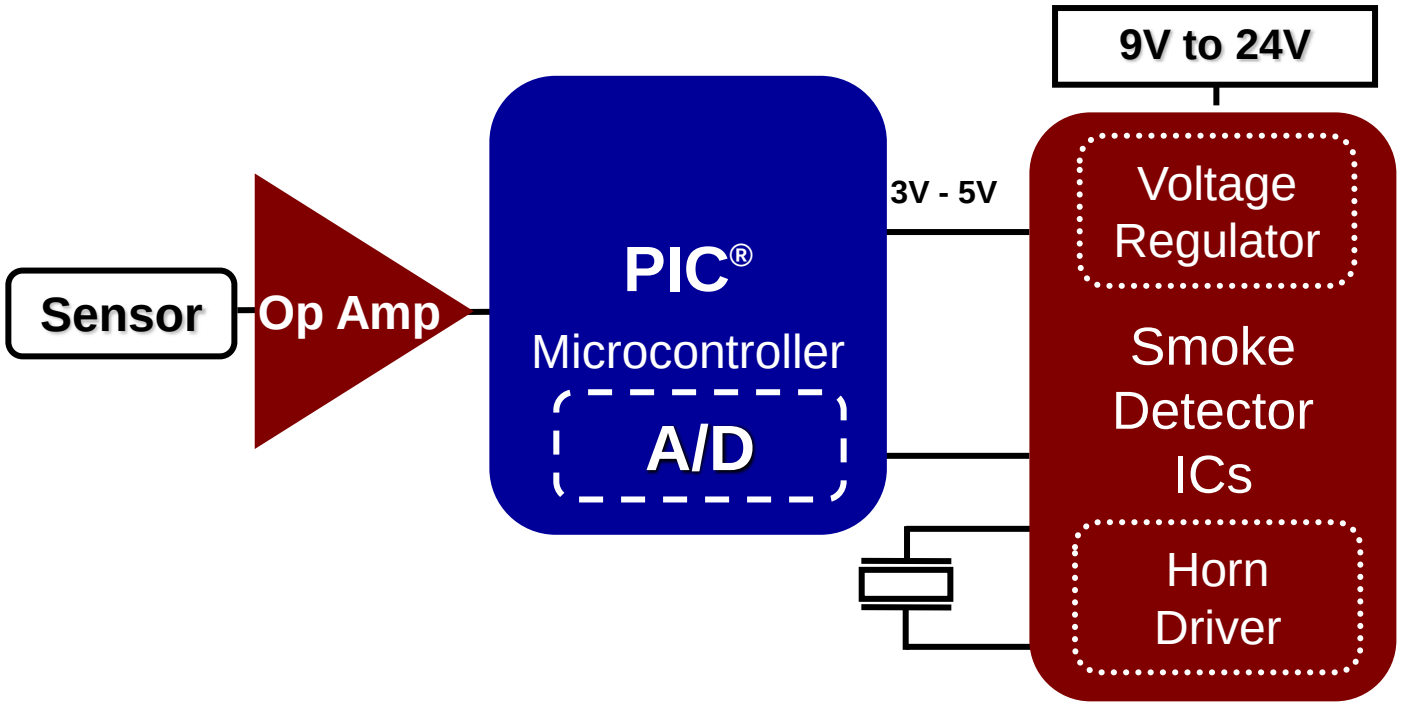

CO Companion
10 Yr Low Voltage Smoke Detector
CO Detectors
Low cost Smoke Detectors
Home Alarm Systems
<< BACK to CONTENTS

Low Cost Smoke Detector

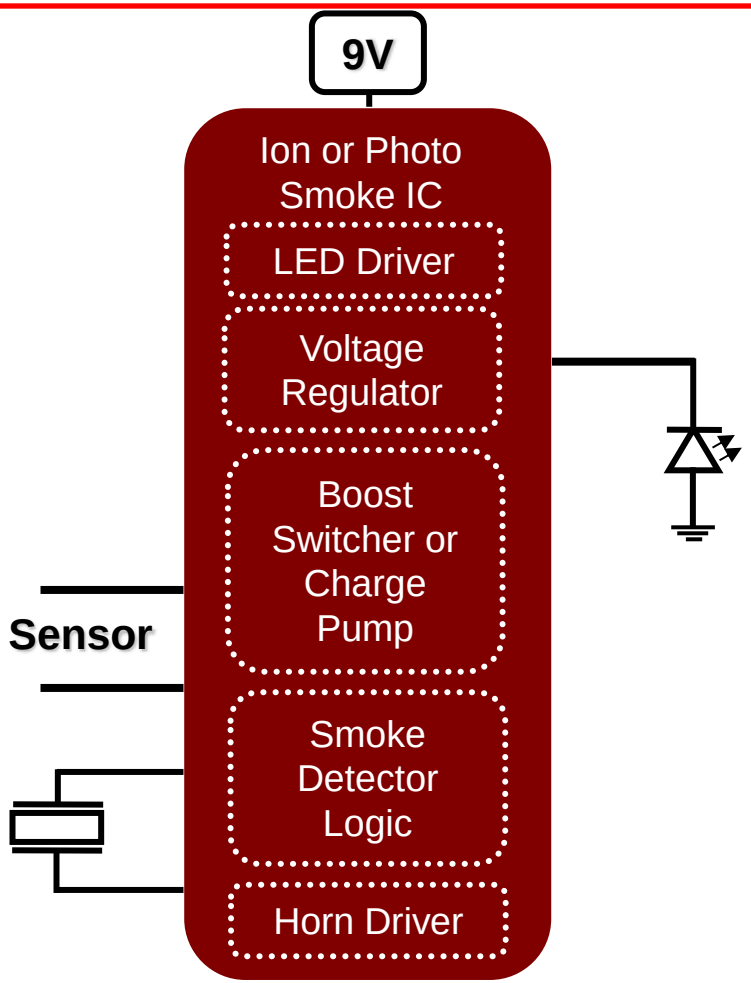

CO Companion
10 Yr Low Voltage Smoke Detector
CO Detectors
Addressable Smoke Detectors
Home Alarm Systems
<< BACK to CONTENTS

10 Year Low Voltage Smoke Detector

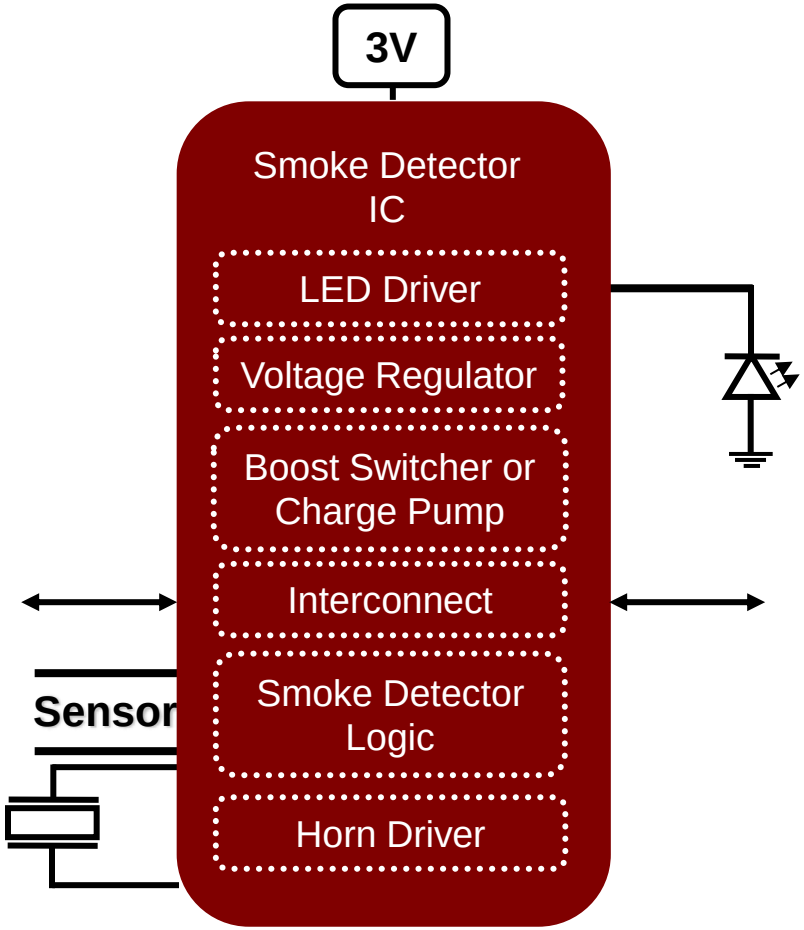

CO Companion
CO Detectors
Low cost Smoke Detectors
Addressable Smoke Detectors
Home Alarm Systems
<< BACK to CONTENTS

CO Detector Companion IC

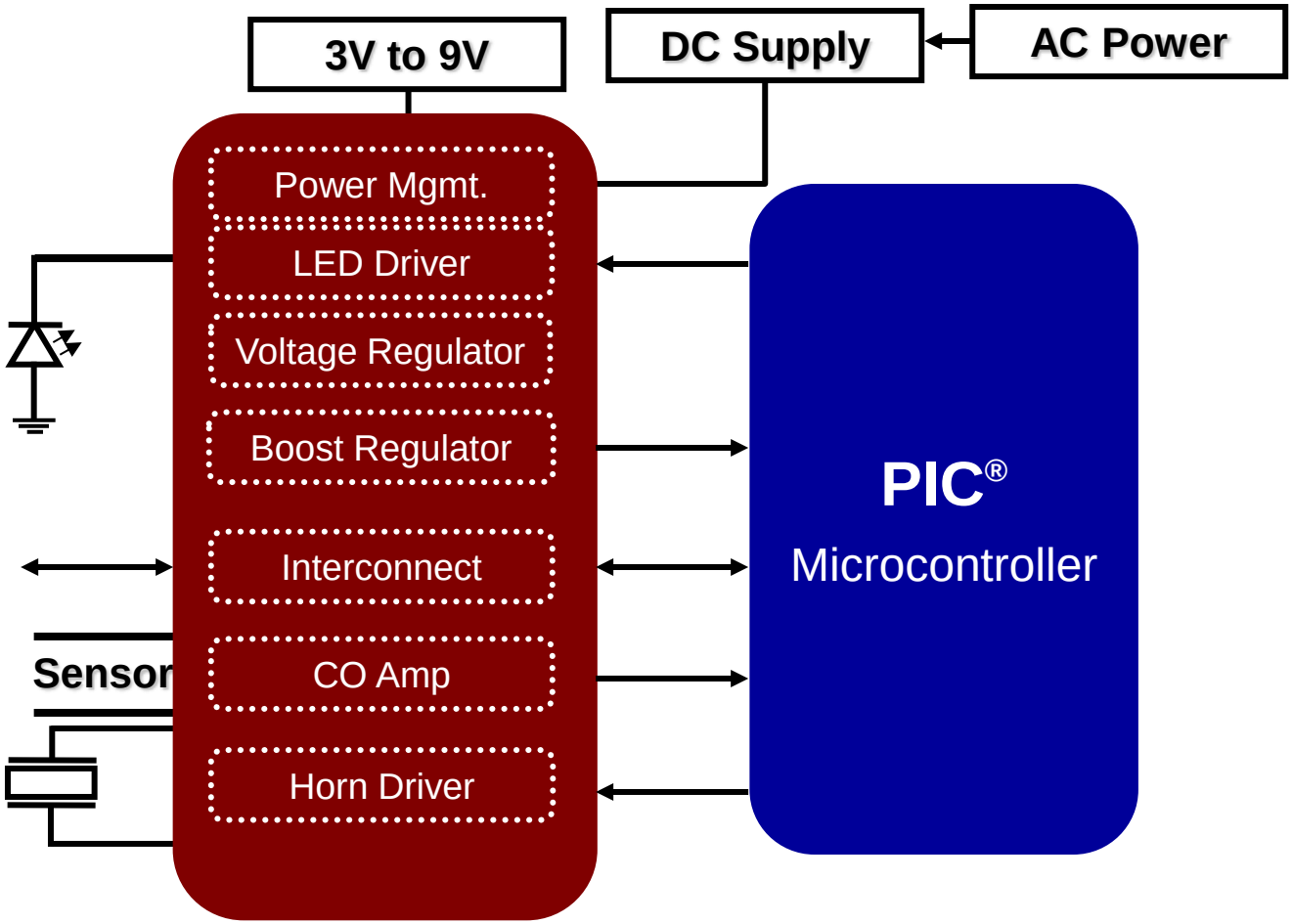

CO Detectors

10 Yr Low Voltage Smoke Detector

Low cost Smoke Detectors

Addressable Smoke Detectors

Home Alarm Systems

<< BACK to CONTENTS

Operational Amplifiers

- **Function: Provide gain to small signals**

Popular Products	Description	Product Web Page
MCP603x	The MCP6031/2/3/4 op amps have a gain bandwidth of 10 kHz with a low typical operating current of 0.9 µA and an offset voltage that is less than 150 µV.	Click Here
MCP6444	The MCP6444 is a quad general purpose op amp offering rail-to-rail input and output over the 1.8 to 6V operating range. This amplifier has a typical GBWP of 9 kHz with typ. quiescent current of 450 nA .	Click Here
MCP6V11 Zero Drift Op Amps	Gain-Bandwidth Product: 80 kHz, Offset Voltage: ±8 µV (max.), IQ: 11 µA (typ.), Wide Supply Voltage Range: 1.6V to 5.5V	Click Here

Next: Comparators>>

Comparators

- **Function: Establish alarm thresholds (primarily in smoke detectors)**

Popular Products	Description	Product Web Page
MCP6567	These comparators are optimized for low power, single-supply operation with greater than rail-to-rail input operation. The open drain output of the MCP6566/7/9 family with a pull-up resistor, can be used as a level shifter for any desired voltage from 1.6V to 5.5V.	Click Here

Analog-to-Digital Converters

- **Function: converting analog feedback signals to digital signals for MCU**

Popular Products	Description	Product Web Page
MCP3221	The MCP3221 is a 12-bit SAR A/D converter. Available in the SOT-23 package, the MCP3221 provides a low max. conversion current and standby current of 250 µA and 1 µA respectively. Communication to the MCP3221 is performed using a 2-wire I2C™ Compatible interface. The MCP3221 runs on a single supply voltage range of 2.7 V to 5.5 V.	Click Here
MCP3201	The MCP3201 12-bit Analog-to-Digital Converter (ADC) combines high performance and low power consumption in a small package, making it ideal for embedded control applications. The MCP3201 features SAR architecture and a SPI serial interface, allowing 12-bit ADC capability to be added to any PIC® microcontroller. The MCP3201 features 100k samples/second, 1 input channel, low power consumption (5nA typical standby, 400µA max. active).	Click Here

<< BACK to BLOCK DIAGRAM

RESET Monitors

- **Function: Reset the CPU and/or MCU when supply voltage falls below threshold**

Popular Products	Description	Product Web Page
MCP13xx	The MCP13xx voltage supervisors provide precision monitoring trip points, Watch Dog Timer inputs, Manual Reset with a low Supply current of 10 µA over extended temperature range from 1.0V to 5.5V supply.	Click Here
TCM809	The reset output is driven active within 20 µsec of VCC falling through the reset voltage threshold. Reset is maintained active for a minimum of 140msec after VCC rises above the reset threshold.	Click Here

<< BACK to BLOCK DIAGRAM

Voltage References

- **Function: providing the system with an accurate analog voltage for comparison**

Popular Products	Description	Product Web Page
MCP1525/41	MCP1525/41 is a low power, high precision voltage reference. It provides a precise output voltage of 4.096V which is then compared to other voltages in the system.	Click Here
MCP1501	The MCP1501 is a high-precision buffered voltage reference with an initial accuracy of 0.10% and is available in 8 voltage options. The MCP1501 is a low-drift bandgap-based reference and uses chopper-based amplifiers which significantly reduces the drift and provides high current output.	Click Here

<< BACK to BLOCK DIAGRAM

Power Management

Popular Products	Description	Product Web Page
MCP13xx	The MCP13xx are voltage supervisor devices designed to keep a microcontroller in reset until the system voltage has reached and stabilized at a proper level for reliable system operation.	Click Here
MCP111/2	The MCP111/112 voltage detectors have extremely low 1uA operating current and small form factor. They hold the microcontroller in reset until the supply voltage reaches a predetermined operating level. These devices also protect against brownout conditions	Click Here
LDO MCP1700 MCP1703A	The MCP1700/3A are CMOS low dropout positive voltage regulators which can source up to 250mA of current with an extremely low input-output voltage differential The low dropout voltage combined with the low current consumption makes this part ideal for battery operation.	MCP1700 MCP1703A
MCP16301	The MCP16301 is a highly integrated, high-efficiency, fixed frequency, step-down DC-DC converter in a popular SOT-23 package that operates from input voltage sources up to 30V	Click Here

<< BACK to BLOCK DIAGRAM

Temperature Sensor

- **Function: provides temperature measurement**

Popular Products	Description	Product Web Page
TC1047	The TC1047A is a linear output temperature sensor whose output voltage is directly proportional to measured temperature. For the TC1047A, the output voltage range is typically 100mV at -40C, 500mV at 0C, 750mV at +25C, and 1.75V at +125C. A 10mV/°C voltage slope allows for the wide temperature range.	Click Here
MCP9700 Linear Active Thermistor™ ICs	The output voltage of this device is directly proportional to measured temperature. The MCP9700 can accurately measure temperature from -40C to +150C with the output calibrated to a slope of 10mV/°C and has a DC offset of 500mV.	Click Here

<< BACK to BLOCK DIAGRAM

PIC Microcontrollers

- **Function: coordinating all the control and monitor functions - the brain of the system**
- **Popular products: PIC16F161X, 527/570, 32X, 182X, 75X, 15XX**
- **Attributes:**
  - Up to 32MHz operating speed
  - PWM output (PIC16F182X)
  - Programmable switch mode controller (PIC16F75X)
  - Integrated comparators, op-amp, 12-bit ADC, 8-bit DACs
  - Up to 256 bytes of EEPROM
  - Available various packages

NEXT

PIC12F675 - PICmicro

- **Features**
  - Only 35 instructions to learn
  - All single cycle instructions (200 ns), except for two-cycle program branches
  - Operating speed:
    - DC – 20 MHz oscillator/clock input
    - DC – 200 ns instruction cycle
  - Memory
    - 1024 x 14 words of FLASH
    - 64 x 8 bytes of Data Memory (SRAM)
    - 128 x 8 bytes of EEPROM
  - Interrupt capability
  - 16 special function hardware registers
  - 8-level deep hardware stack
  - Direct, Indirect, and Relative Adreessing
- **Peripherals**
  - 6 I/O pins with individual direction control
  - High current sink/source for direct LED drive
  - Analog comparator module
  - ADC Module
    - 10-bit resolution
    - Programmable 4-Ch input
    - Voltage reference input
  - Timer0: 8-bit timer/counter
  - Enhanced Timer1:
    - 16-bit timer/counter with prescaler
    - External Gate Input Mode
  - 64 bytes of general purpose RAM

Smoke Detector ICs

Smoke Detector Type	Products	Description	Product Web Page
Photoelectric Smoke Detector IC	RE46C191	• Two AA battery Operation • Internal Power On Reset • Low Quiescent Current Consumption • Internal IRED driver with Programmable IRED Current • Programmable Photo Amplifier, Smoke Sensitivity Levels • 9 Minute Timer for Sensitivity Control • Chamber Test with Programmable Sensitivity Level • Internal Low Battery Test with Programmable Threshold • Local Alarm Memory • Temporal or Continuous Horn Pattern • All internal Oscillator	Click Here
Ionization-type Smoke Detector IC	RE46C180	• 6 -12V Operation • Low Quiescent Current Consumption • +/- 0.75pA Detect Input Current • Guard Outputs for Ion Detector Input • Programmable Standby Sensitivity, Hush Sensitivity, Hysteresis, Chamber Voltage for Push-to-Test • Low Battery Set Point • Local Alarm Memory, Auto Alarm Locate • Horn Synchronization • 9 Minute or 80 Second Hush Timer • Temporal or Continuous Horn Pattern • IO Filter and Charge Dump • 10-Year End-of-Life Indication	Click Here

<< BACK to BLOCK DIAGRAM

RE46C800

	Description	Product Web Page
RE46C800	• The RE46C800 provides all of the necessary analog, interface, and power management functions necessary to build a microcontroller based CO or toxic gas detector. • The RE46C800 is intended for use with two terminal electrochemical CO and toxic gas sensors. • The uncommitted op amp can also be used for heat detector applications	Click Here

<< BACK to BLOCK DIAGRAM

EEPROM Memory

- **Function: storing factory calibration values and the "life" clock of a CO sensor**
- **Popular products: 24LCxxx, 93xx46A/B, 25LCxxx**
- **Attributes:**
  - SPI™, I²C™ and Microwire® Interface
  - Small SOT-23 and MSOP packages
  - Densities from 128 to 512k
  - Supply voltages as low as 1.8V
  - E/W Cycles: 1M

NEXT

93XX46A/B - Microwire EERPOM

Features

- Low power CMOS technology
- ORG pin to select word size for '46C version
- 128 x 8-bit organization 'A' ver. devices (no ORG)
- 64 x 16-bit organization 'B' ver. devices (no ORG)
- Self-timed ERASE/WRITE cycles (including auto-erase)
- Automatic ERAL before WRAL
- Power on/off data protection circuitry
- Industry standard 3-wire serial I/O
- Device status signal (READY/$\overline{\text{BUSY}}$)
- Sequential READ function
- 1,000,000 E/W cycles
- Data retention > 200 years
- Temperature ranges supported
  - Industrial (I) -40°C to +85°C
  - Automotive (E) -40°C to +125°C

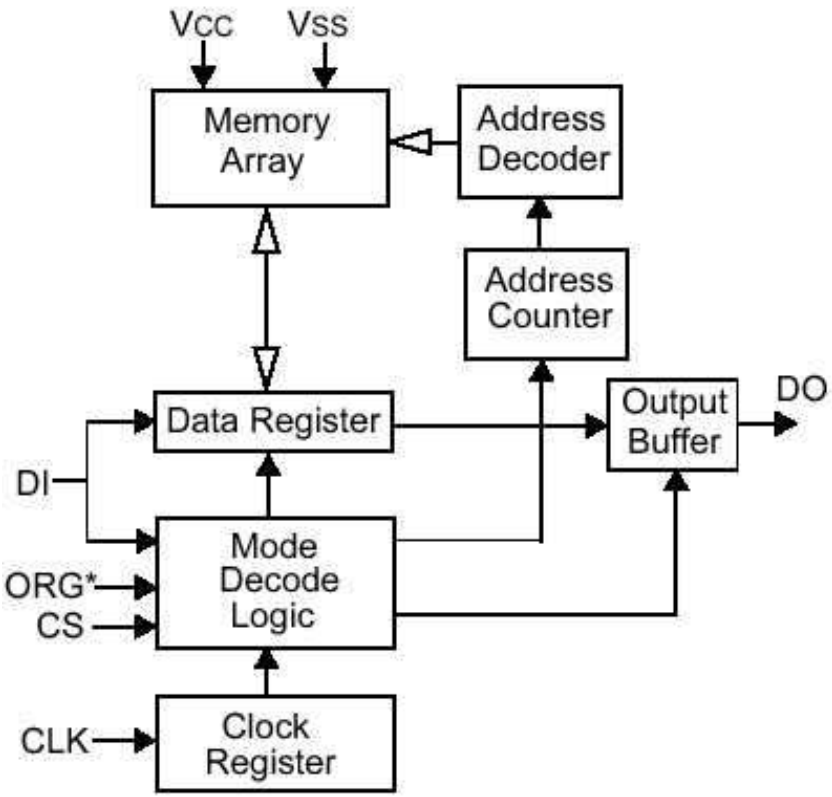

<< BACK to BLOCK DIAGRAM

Horn Drivers

- **Horn Drivers allows battery operation of a piezoelectric horn**
  - Piezoelectric horns are a low cost, high efficiency method to achieve the sound pressure required.
- **Horn Drivers provide these advantages:**
  - Realize cost savings by reducing component count
  - Increase battery life, low current low voltage
  - Switchers and charge pumps for even lower voltage operation
  - Self resonance calibration

NEXT

Horn Driver Family (1)

- **Piezoelectric Horn Drivers, baseline ASIC Products**
  - RE46C100 basic model, Vdd 6V - 16V
  - RE46C101 with LED Driver, Vdd 6V - 16V
  - RE46C104 with Voltage Converter, Vdd 4V-8V
  - RE46C117 with Charge Pump, Vdd 2V - 5V

NEXT

Horn Driver Family (2)

- **Piezoelectric Horn Drivers <u>with</u> controller Voltage Regulators ASIC products**
  - RE46C108 Vreg pin select 3.3V or 5V, Vdd 6V-12V
  - RE46C105 Vreg pin select 3.3V or 5V, Low Battery, LED Driver, Vdd 6V-12V
  - RE46C107 Vreg pin select 3V or 3.3V, Low Battery, Brownout, Vdd 2V-5V
  - RE46C109 Vreg 3.0V, Low Battery, I/O, Brownout, Vdd 6-12V
  - RE46C119 Vreg 3.0V, Low Battery, I/O, Power Good, 6V-12V

<< BACK to BLOCK DIAGRAM

Smoke Detector ICs

- **Smoke Detector ICs allows implementation of low power Ionization or photoelectric smoke detectors**
- **Advantages:**
  - Low battery detection
  - Integrated horn driver
- **Advantages for selected detectors**
  - Interconnect for sounding multiple units
  - Sensitivity/Hush Timer
  - Reverse battery protection
  - 24V Regulator and step-up regulator

NEXT

Ionization Smoke ICs

Popular Products	Description	Product Web Page
RE46C12x	Hush, Interconnect, Continuous or Temporal Pattern, Reverse Chamber Polarity	Click Here
RE46C152	Hush, Interconnect, Pin-select Temporal and Continuous Pattern	
RE46C162/3	Interconnect, Temporal or Continuous Horn Pattern, Alarm Memory	

NEXT

Photoelectric Smoke ICs

Popular Products	Description	Product Web Page
RE46C140/1/3/5/	Hush Timer, Interconnect, Temporal and Continuous Horn Pattern	Click Here
RE46C165/6/7/8	Hush Timer, Interconnect, Temporal and Continuous Horn Pattern, Alarm Memory. Ideal for new home construction market	

Gas Detector & Door Opener

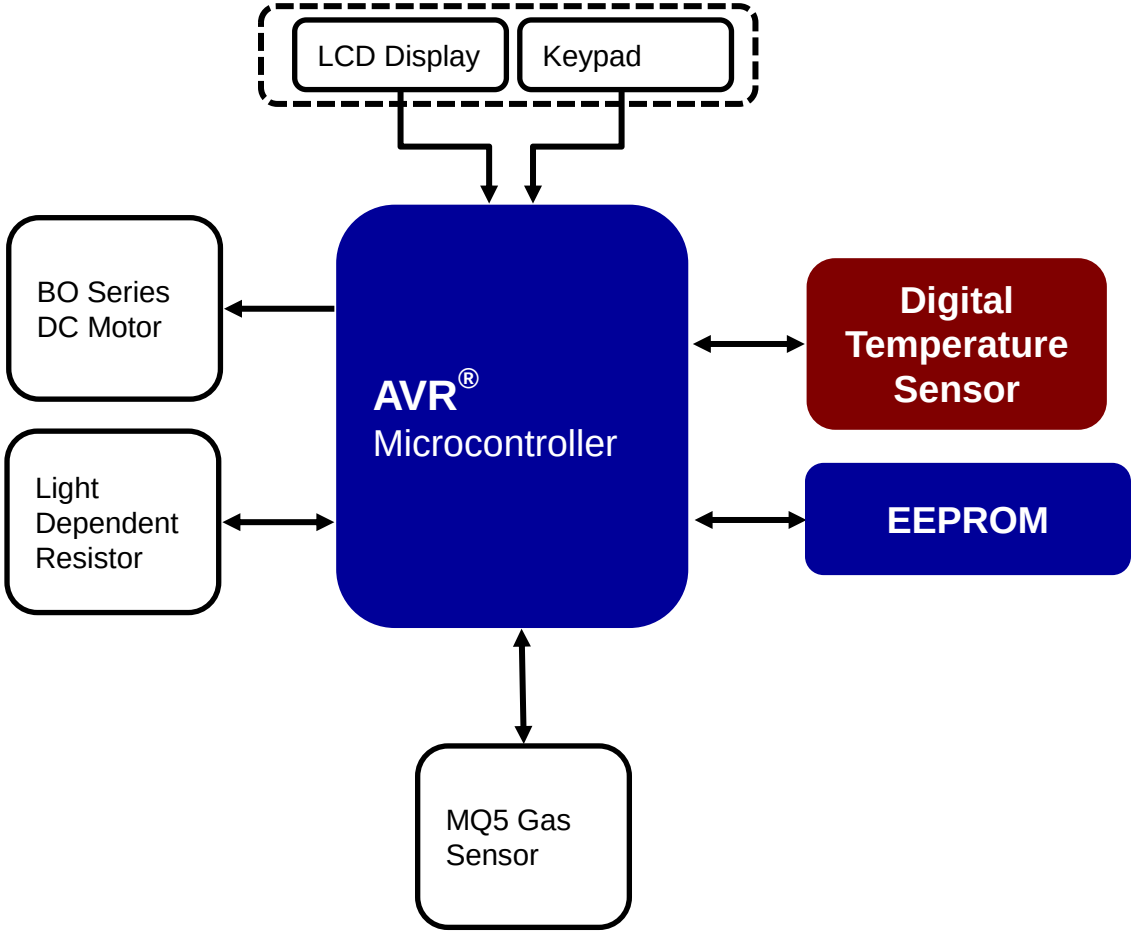

<< BACK to CONTENTS

AVR 8-bit Microcontroller

- **Function: System control and decision making**

Popular Products	Description	Product Web Page
ATmega162	The high-performance, low-power Microchip 8-bit AVR RISC-based microcontroller combines 16KB of programmable flash memory, 1KB SRAM, 512B EEPROM, and a JTAG interface for on-chip debugging. The device supports throughput of 16 MIPS at 16MHz and operates between 2.7-5.5 volts	Click Here

<< BACK to BLOCK DIAGRAM

Digital Temperature Sensor

- **Function: Temperature measurement with digital output**

Popular Products	Description	Product Web Page
MCP9808	The MCP9808 converts temperatures between -20°C and +100°C to a digital word with ±0.5°C (max.) accuracy	Click Here

<< BACK to BLOCK DIAGRAM

EEPROM

Function: Data storage

Popular Products	Description	Product Web Page
25LC1024	The 25LC1024 is a 1024 Kbit serial EEPROM memory with byte-level and pagelevel serial EEPROM functions. It also features Page, Sector and Chip erase functions. These functions are not required for byte or page write operations. The memory is accessed via SPI compatible serial bus.	Click Here

<< BACK to BLOCK DIAGRAM

Weigh Scale

<< BACK to CONTENTS
NEXT

Typical Weigh Scale

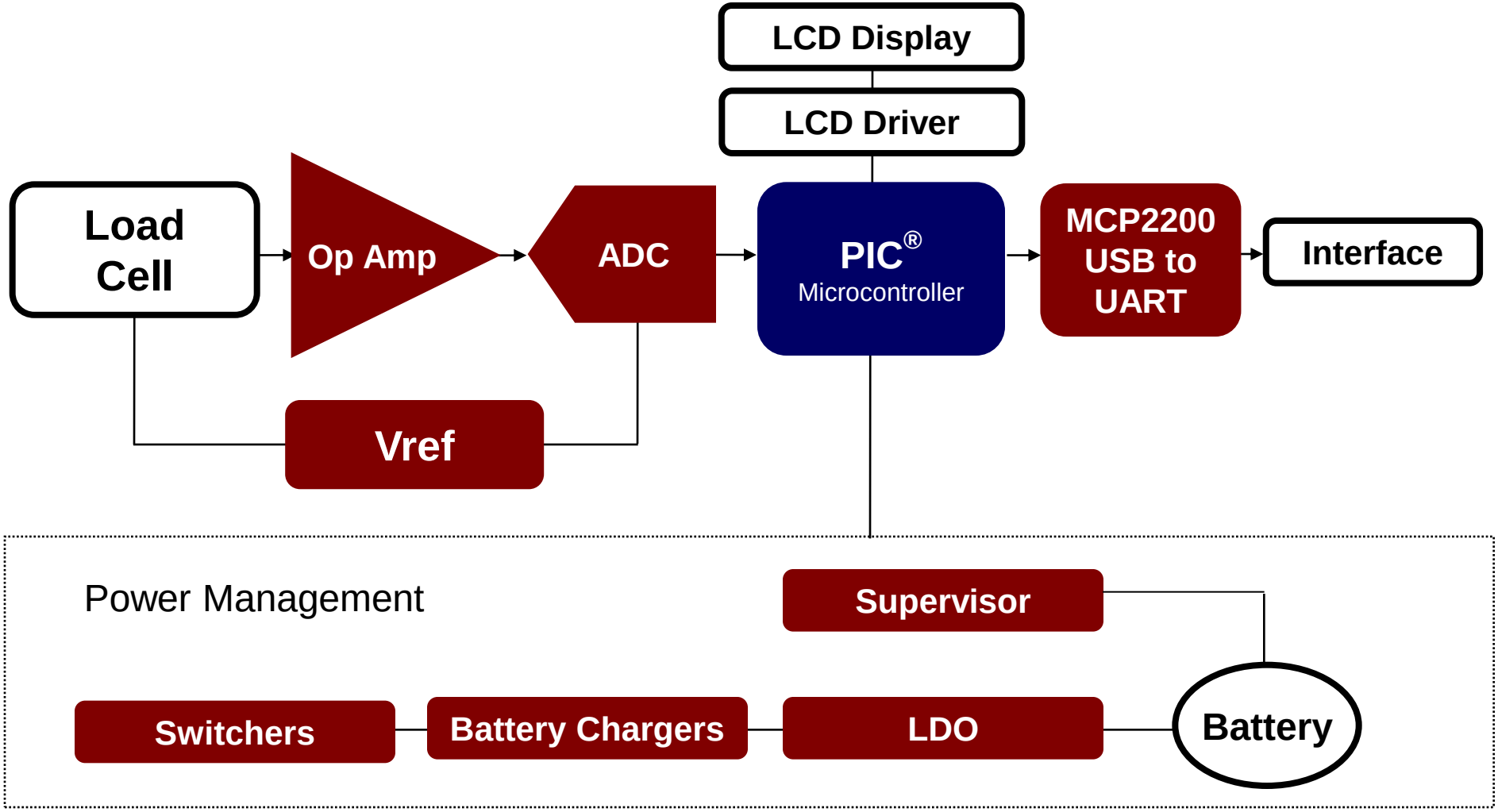

Weigh Scale Demo board

<< BACK to CONTENTS

Operational Amplifiers

Function	Popular Products	Description	Product Web Page
Sense and gain up output current - low offset voltage required for minimizing measurement error	MCP603x	The MCP6031/2/3/4 op amps have a GBWP of 10 kHz with a low typical operating current of 1.35µA and an offset of 150 µV.	Click Here
	MCP6Vxx Family of Zero-Drift Amplifiers	The MCP6Vxx provides high DC precision, including an offset voltage as low as 2µV and offset drift as low as 15nV/°C maximum. They have low quiescent current, no 1/f noise and offer superior CMRR/PSRR performance. The family has an operating voltage as low as 1.6V and are available in small packages (SC-70 and DFN)	Zero-Drift Amplifiers Parametric Table
Provide feedback compensation by sensing output voltage and comparing it with reference voltage	MCP627x/8x/9x	The MCP627/8/9x family general purpose op amp offering rail-to-rail input and output over the 1.8 to 6V operating range. This amplifier has a typical GBWP of 2-10 MHz with low quiescent current	Click Here
Load Cell Signal Conditioning	MCP6Nxx Family of Instrumentation Amplifiers	Microchip expanded its portfolio of amplifiers by first introducing the MCP6N11 the industry's first instrumentation amplifier featuring mCal technology and most recently introducing the MCP6N16 Zero-Drift instrumentation amplifier. • Rail-to-Rail Input and Output • Gain Set by two (2) External Resistors • Enable/Vos Calibration Pin (MCP6N11) • Zero-Drift Architecture (MCP6N16) • Operating Voltage Range: 1.8V to 5.5V • No Common Mode Crossover Distortion	Instrumentation Amplifiers Parametric Table

Winning Attributes

<< BACK to BLOCK DIAGRAM

Operational Amplifiers

- **Attributes:**
  - Small SC-70, TDFN and SOT-23 packages
  - GBWP: 9 kHz to 60MHz
  - Excellent operating current-to-GBWP ratio
  - Mostly rail-to-rail inputs and outputs
  - Offset voltage: as low as 2µV (MCP6V0x)
  - Chip Select capability for power savings

BACK

Voltage References

- **Function: providing the system with an accurate analog voltage for comparison**

Popular Products	Description	Product Web Page
MCP1525/41	MCP1525/41 is a low power, high precision voltage reference. It provides a precise output voltage of 4.096V which is then compared to other voltages in the system.	Click Here
MCP1501	The MCP1501 is a high-precision buffered voltage reference with an initial accuracy of 0.10% and is available in 8 voltage options. The MCP1501 is a low-drift bandgap-based reference and uses chopper-based amplifiers which significantly reduces the drift and provides high current output.	Click Here

<< BACK to BLOCK DIAGRAM

USB-to-UART/SPI

- **Function: Enables USB connectivity in applications that have UART/SPI interface**

Popular Products	Description	Product Web Page
MCP2200	The MCP2200 is a USB-to-UART serial converter. The device reduces external components by integrating the USB termination resistors. The MCP2200 also has 256-bytes of integrated user EEPROM. The MCP2200 has eight general purpose input / output pins. Four of the pins have alternate functions to indicate USB and communication status.	Click Here
MCP2210	The MCP2210 is a USB-to-SPI Master converter. The device reduces external components by integrating the USB termination resistors. The MCP2210 also has 256 bytes of integrated user EEPROM. The MCP2210 has nine general purpose input/output pins. Seven pins have alternate functions to indicate USB and communication status.	Click Here

<< BACK to BLOCK DIAGRAM

Battery Chargers

- **Function: Charge & monitor the Lithium battery chemistries**

Popular Products	Description	Product Web Page
MCP731xx	The MCP73811/2 devices are linear charge management controllers that are designed to provide specific charge algorithms for single cell Li-Ion or Li-Polymer battery to achieve optimal capacity in the shortest charging time possible.	Click Here
MCP732xx	The MCP73123/223 is a highly integrated Lithium Iron Phosphate (LiFePO4) battery charge management controller that provide specific charge algorithms for LiFePO4 batteries to achieve optimal capacity and safety in the shortest charging time possible. Along with its small physical size, the low number of external components makes the MCP73123/223 ideally suitable for various applications.	Click Here

Winning Attributes

<< BACK to BLOCK DIAGRAM

Battery Chargers

- **Attributes:**
  - Small thermally efficient DFN and QFN packages
  - High-accuracy voltage regulation: ±0.5% (max)
  - Low operating current: 260µA (typ)
  - Shutdown and pre-conditioning modes
  - Temperature monitor & charge complete indicator
  - USB/AC inputs
  - Loadsharing
  - Overvoltage Protection (OVP)

BACK

PIC Microcontrollers

- **Function: coordinating all the control, some peripheral functions and monitor functions - the brain of the system**
- **Popular products: PIC16F193X, PIC18F65J90/94, K87K90**
- **Attributes:**
  - Up to 32 MHz operating speed
  - PWM output (PIC16F193X)
  - Integrated LCD controller, up to 256 segments
  - Integrated comparators, op-amp, 12-bit ADC, 5/8/9 bit DAC
  - Up to 256 bytes of EEPROM
  - Available in PDIP, SOIC, and TSSOP packages

<< BACK to BLOCK DIAGRAM

Switching Regulators

Popular Products	Description	Product Web Page
MCP1601	The MCP1601 is a synchronous Buck (step-down) switching regulator that can continuously supply 500mA of load current. This device can provide output voltages of 0.9V to Vin with an operating efficiency that can exceed 92%.	Click Here
MCP16251/2	The MCP16251/2 is a compact, high-efficiency, fixed frequency, synchronous step-up DC-DC converter. This family of devices provides an easy-to-use power supply solution for applications powered by either one-cell, two-cell or three-cell alkaline, NiCd, NiMH and one-cell Li-Ion or Li-Polymer batteries.	Click Here
MCP1640	The MCP1640 is a compact, high-efficiency, fixed frequency, synchronous step-up DC-DC converter. It provides an easy-to-use power supply solution for applications powered by either one-cell, two-cell, or three-cell alkaline, NiCd, NiMH, one-cell Li-Ion or Li-Polymer batteries.	Click Here

Winning Attributes

<< BACK to BLOCK DIAGRAM

Switching Regulators

- **Attributes:**
  - Regulator and controller (external FET) solutions
  - Small SOT-23, MSOP and SOP packages
  - Auto-switching PWM/PFM operation
  - 300kHz and 750kHz switching frequency
  - UVLO, Soft-start & over-temperature protection
  - Efficiency as high as 95%
  - Very low operating current

BACK

RESET Monitors

- **Function: Reset the CPU and/or MCU when supply voltage falls below threshold**

Popular Products	Description	Product Web Page
MCP13xx	The MCP13xx voltage supervisors provide precision monitoring trip points, Watch Dog Timer inputs, Manual Reset with a low Supply current of 10 µA over extended temperature range from 1.0V to 5.5V supply.	Click Here
TCM809	The reset output is driven active within 20 µsec of VCC falling through the reset voltage threshold. Reset is maintained active for a minimum of 140msec after VCC rises above the reset threshold.	Click Here

Winning Attributes

<< BACK to BLOCK DIAGRAM

RESET Monitors

- **Attributes:**
  - Tiny SOT-23 and SC-70 packages
  - Very low operating current: as low as 10µA (max)
  - High threshold voltage accuracy: ±2.8% (max)
  - V_{DD} transient immunity
  - Watchdog Timer / manual reset (MCP13xx, TC1232)
  - Many available options: push-pull output, open-drain output and internal pull-up resistor

BACK

Low-Power LDOs

- **Function: providing regulated, low-noise supply voltages for the system**

Popular Products	Description	Product Web Page
MIC5353	The MIC5353 is a 500 mA, ceramic output cap stable, low output voltage, Low Dropout Regulator. The MIC5353 is packaged in very small 1.6x1.6mm DFN package. This part has high PSRR of 60dB with low output noise of 30 uVrms for noise sensitive applications	Click Here
MCP1703A	With 250 mA maximum output, MCP1703 works with input voltage of up to 16V and in combination with its low current consumption of 2 µA	Click Here

<< BACK to BLOCK DIAGRAM

ADC Portfolio

- **Function: Converting analog voltage or current signal (pressure) into digital data**

Popular Products	Description	Product Web Page
MCP3421	The MCP3421 is a single channel low-noise, high accuracy Delta-Sigma A/D converter with differential inputs and up to 18 bits of resolution in a small SOT-23-6 package. The device uses a two-wire I2C™ compatible serial interface and operates from a single power supply ranging from 2.7V to 5.5V.	Click Here
MCP3551	MCP355X devices are 2.7V to 5.5V, 22-bit delta-sigma A/D converters. The family exhibit good linearity, high accuracy and low noise performance for applications where sensor measurements such as pressure are performed.	Click Here

Winning Attributes

<< BACK to BLOCK DIAGRAM

Delta-Sigma Analog-to-Digital Converters

- **Attributes:**
  - Resolution: 16 to 22 bits
  - Max sampling rate: up to 240 sps
  - Current consumption: 120 to 155 µA (max.)
  - Single supply voltage: 2.7V to 5.5V
  - Small packages: SOT-23 and MSOP

BACK

Product Support Tools

Devices Supported:
MCP3421, MCP6V07, PIC18F4550

Summary Description:
The MCP3421 Weight Scale Demo Board is designed to evaluate the performance of the low-power consumption, 18-bit ADC in an electronic weight scale design. Next to the MCP3421 there is a low-noise, auto-zero MCP6V07 op amp. This can be used to investigate the impact of extra gain added before the ADC for performance improvement. The PIC18F4550 is controlling the LCD and the USB communication with the PC. The GUI is used to indicate the performance parameters of the design and for calibration of the weight scale.

This Kit Contains:
- MCP3421 Weight Scale Demo Board
- 9V Power adapter
- Mini USB cable
- CD with software and documentation

<< BACK to BLOCK DIAGRAM

Energy Measurement

<< BACK to CONTENTS
NEXT

Microchip's Winning Attributes

- **Industry leading Analog Front End (AFE) accuracy (SINAD, THD, SFDR)**
- **High performance integration**
- **Full solution**
  - Flexible and upgradable solution with AFE+PIC® MCUs and SoC solutions
  - System solution with wireless, memory, analog
- **Great technical support**
  - Numerous reference designs and evaluation boards
  - ACE Metrology Team

NEXT

Energy Meter Block Diagram

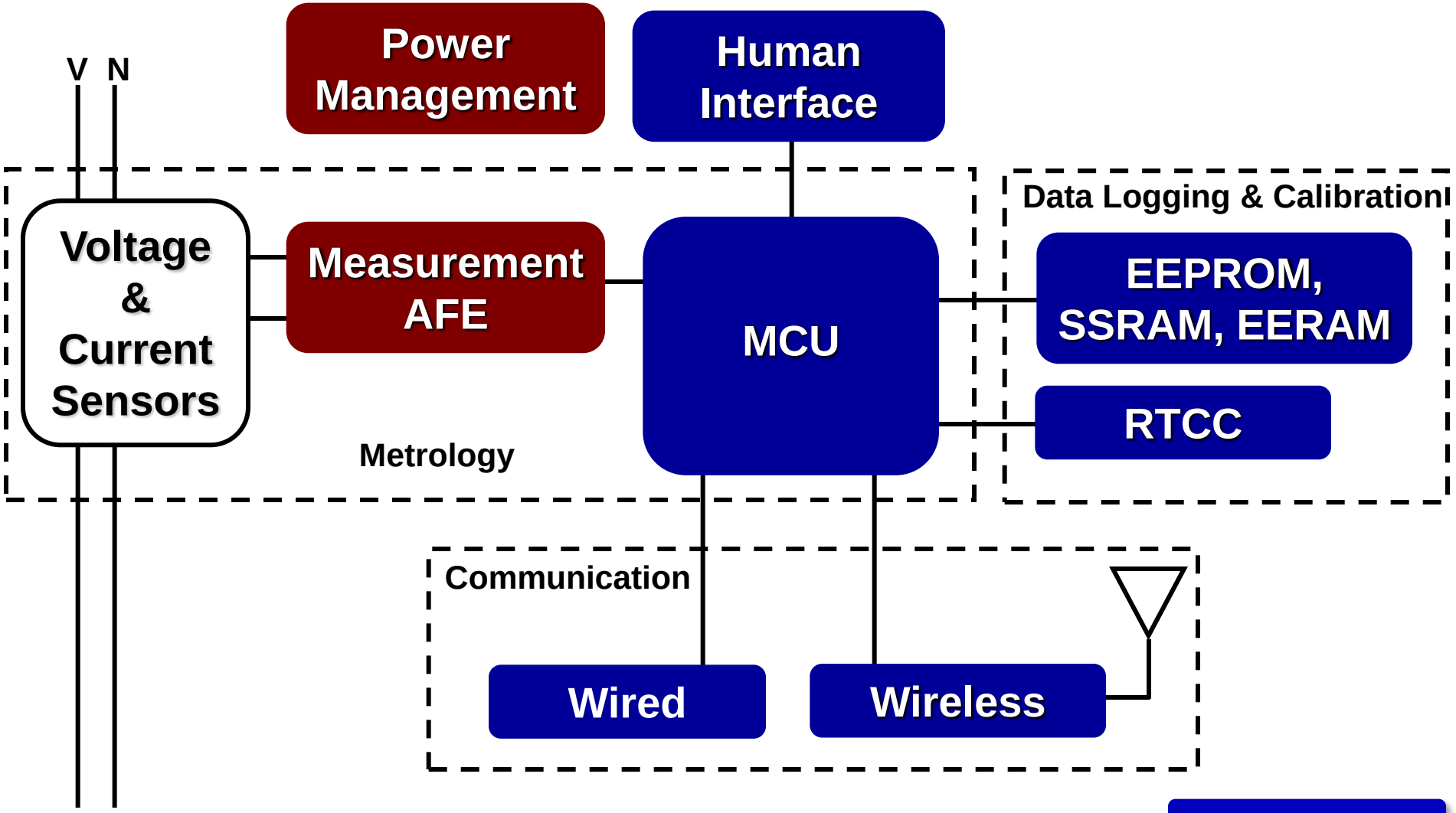

<< BACK to CONTENTS

Power Management

Popular Products	Description	Product Web Page
LDO MCP1700 MCP1703A	The MCP1700/3A are CMOS low dropout positive voltage regulators which can source up to 250mA of current with an extremely low input-output voltage differential The low dropout voltage combined with the low current consumption makes this part ideal for battery operation.	MCP1700 MCP1703A
MCP16311/2	The MCP16311/2 is a compact, high-efficiency, fixed frequency PWM/PFM, synchronous step-down DC-DC converter in a 8-pin MSOP, or 2 x 3 TDFN package that operates from input voltage sources up to 30V. Integrated features include a high-side and a low-side switch, fixed frequency Peak Current Mode Control, internal compensation, peak-current limit and overtemperature protection. The MCP16311/2 provides all the active functions for local DC-DC conversion, with fast transient response and accurate regulation.	Click Here
MIC2851x	MIC28510 is an adjustable frequency, synchronous buck regulator featuring unique adaptive on time control architecture. The MIC28510 operates over an input supply range of 4.5V to 75V and provides a regulated output of up to 4A of output current. The output voltage is adjustable down to 0.8V with a guaranteed accuracy of ±1%.	MIC28510

<< BACK to BLOCK DIAGRAM

Sensing Technologies

- **Voltage**
  - Resistive Divider from line voltage
- **Current: 4 main sensor types**

Current Sensor	Cost	Power Consumption	High Current Capability	Description
Current Shunt	Very Low	Medium	Poor	Accurate resistor, 100µΩ to 500mΩ , non-isolated
Current Transformer	Medium	Low	Good	Winding with magnetic core, isolated
Rogowski Coil	Low-Med	Low	Very Good	Helical coil, output needs to be integrated, isolated
Hall Effect Transformer	High	Medium	Good	Hall plate, isolated

<< BACK to BLOCK DIAGRAM

Energy Measurement Analog Front Ends

- **Energy Measurement AFEs provide the most flexible and highest accuracy solutions**

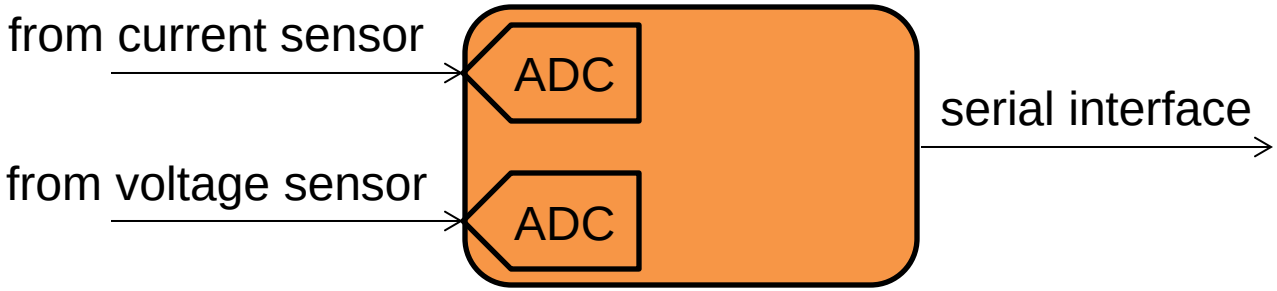

- **Energy Calculation ICs provide energy and power calculations, simplifying design**

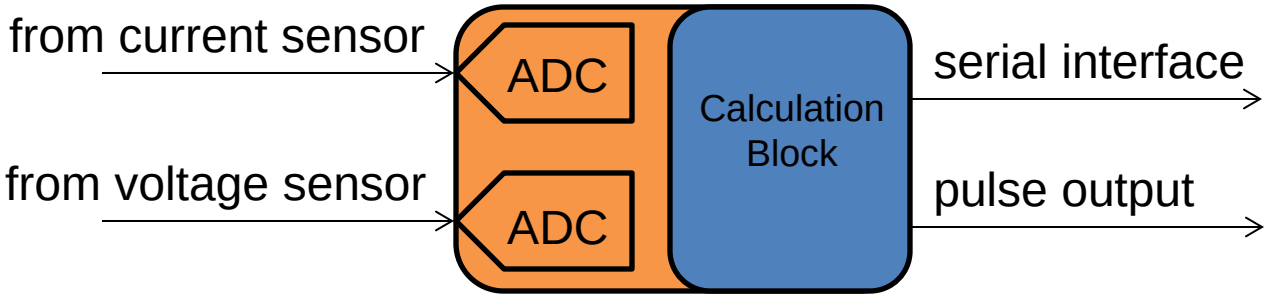

Energy Calculation IC

Analog-Front-End (Companion Chip)

<< BACK to BLOCK DIAGRAM

Energy Measurement Analog Front Ends

Part Number	# of ADCs	Power Measurement
MCP3918	1	1-Phase or 3-Phase (shunt-based)
MCP3910	2	1-Phase or 3-Phase (shunt-based)
MCP3911	2	1-Phase
MCP3919	3	1-Phase w/ Neutral
MCP3912	4	2-Phase (Dual/Split-Phase)
MCP3913	6	3-Phase
MCP3914	8	3-Phase w/ Neutral
ATSENSE101	3	1-Phase w/ Neutral
ATSENSE201(H)	4	2-Phase (Dual/Split-Phase)
ATSENSE301(H)	7	3-Phase w/ Neutral

NEXT

Energy Measurement Analog Front Ends

- **Energy measurement AFEs enables the most flexible and highest accuracy solutions**

Popular Products	Description	Product Web Page
MCP391X	The MCP391X AFE family provide up to eight simultaneously sampling Delta-Sigma Analog-to-Digital Converters (ADC), PGAs, phase delay compensation block, low-drift voltage reference, digital offset and gain errors calibration registers, and high-speed 20 MHz SPI interface. The family enables 0.1% typical active power measurement error over a 10000:1 dynamic range.	Click Here
ATSENSE	The ATSENSE AFE family integrate three, four or seven simultaneously sampled Sigma-Delta ADCs, a high-precision voltage reference a programmable current signal amplification, a temperature sensor and an SPI interface. When used in combination with the ATSAM4C device family and metrology library, the ATSENSE exceeds ANSI C12.20-2002 and IEC 62053-22 metering accuracy classes of up to 0.2% over 3000:1 dynamic range	Click Here

Winning Attributes

<< BACK to AFEs

Energy Measurement AFE Winning Attributes

- **Attributes:**
  - MCP391X industry leading accuracy enables 0.1% active power measurement error (typ.) over a 10000:1 dynamic range, use of smaller shunt sensors, and reduction in calibration requirements
    - Programmable data rate up to 125 ksps allows device to run at low power or at high speed for advanced signal acquisition such as for harmonic analysis
  - ATSENSE ideal companion chip with ATSAM4C dual cortex-M4 MCU family and metrology library

NEXT

Accuracy Comparison

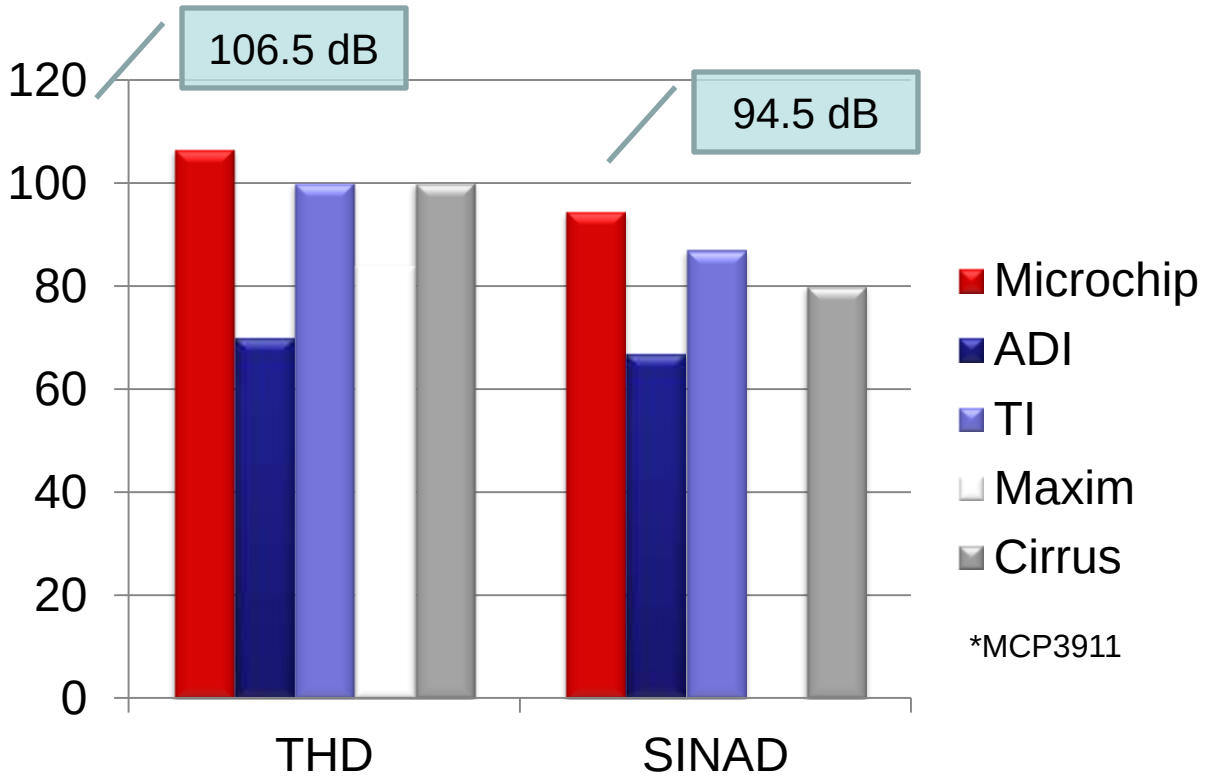

Total Harmonic Distortion and Signal-to-Noise and Distortion Ratio are measures of a device's accuracy

<< BACK to AFEs

Energy Calculation ICs

- **Energy measurement calculation ICs provide energy and power calculations on one device**

Popular Products	Description	Product Web Page
MCP3905A	The MCP3905A is a 1-Φ energy meter IC. The output includes a frequency proportional to the average active (real) power.	Click Here
ATM90E26	The ATM90E26 is an energy metering device for 1-Φ two-wire, 1-Φ three-wire or anti-tampering active and reactive energy meters.	Click Here
ATM90E32AS	The ATM90E32AS is an enhanced energy metering device for 3-Φ four-wire (3P4W, Y0) or 3-Φ three-wire (3P3W, Y or Δ) systems. It contains enhanced functions such as piecewise non-linear compensation, anti-tampering monitoring and expanded event-detecting function.	Click Here
ATM90E36A	The ATM90E36A is a energy metering device for 3-Φ four-wire (3P4W, Y0) or 3-Φ three-wire (3P3W, Y or Δ) systems. It includes Total Harmonic Distortion (THD) and Discrete Fourier Transform (DFT) functions for harmonic component analysis.	Click Here

Winning Attributes

<< BACK to AFEs

Energy Measurement AFE Winning Attributes

- **Attributes:**
  - Fully compliant with IEC62052
  - Accuracy:
    - MCP3905A 500:1 Active Power
    - ATM9026: 0.1% for active energy and 0.2% for reactive energy over 5000:1 dynamic range
    - ATM90E32AS/36A ±0.1% for active energy and ±0.2% for reactive energy over 6000:1 dynamic range
  - MCP3905A pin-to-pin compatible with ADE7755

<< BACK to AFEs

Microcontrollers

- **Function:**
  - Power calculations
  - More powerful MCUs for (wireless) communications
- **Popular products:**
  - ATSAM4Cx, ATSAM4CMx, ATSAM4CPx
  - PIC16F15XX
  - PIC16F182X
  - PIC18F65J90
  - PIC24FJ128GA306, PIC24FJ128GA310
  - PIC32 (advanced smart meters)

<< BACK to BLOCK DIAGRAM

Microchip Calculation Library

MCU	Phase Sensor	Active Power	V & I rms	Apparent Power	Reactive Power	Harmonic Analysis
PIC18 8-bit, 12 MIPS	1Φ-Shunt 3Φ-CT	✔	✔	✔	✔	n/a
PIC24F/H 16b, 16-70 MIPS	1Φ- Shunt/CT 3Φ-Shunt, CT, RGC	✔	✔	✔	✔	TBD
dsPIC33 16b, 40-70 MIPS	1Φ-Shunt 3Φ-CT	✔	✔	✔	✔	✔
PIC32 32-bit, 80MHz	1Φ-Shunt 3Φ-CT	✔	✔	✔	✔	✔

CT = Current Transformer, RGC = Rogowski Coil

- **A.C.E metrology team has developed a library of firmware that is available for customer use and can assist in customization**

<< BACK to BLOCK DIAGRAM

RTCC
Monitoring Time of Usage

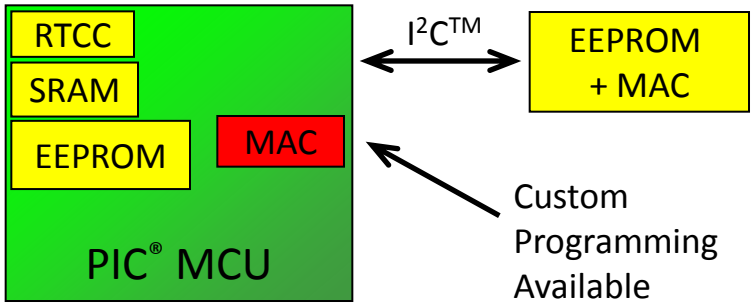

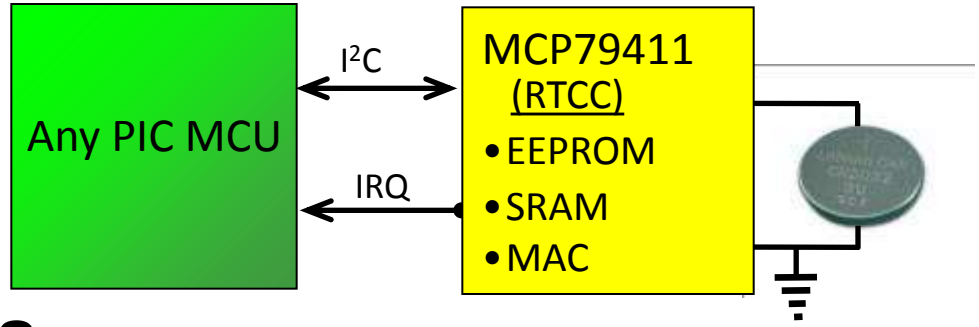

- **Energy billing purposes**
  - Accurate time & energy usage monitored and stored
- **Smart energy communications**
  - Timestamp usually included with messages
  - MAC address loaded in MCU or RTCC with unique ID
- **Periodic system status to validate meter operation**
  - Timestamp logged each time a self diagnostics is performed

<< BACK to BLOCK DIAGRAM

Data Storage & Data Logging in Energy Monitoring

- **Data Logging:**
  - Meter operation is periodically monitored & recorded
  - Energy usage is measured and stored
    - High endurance memory is a requirement

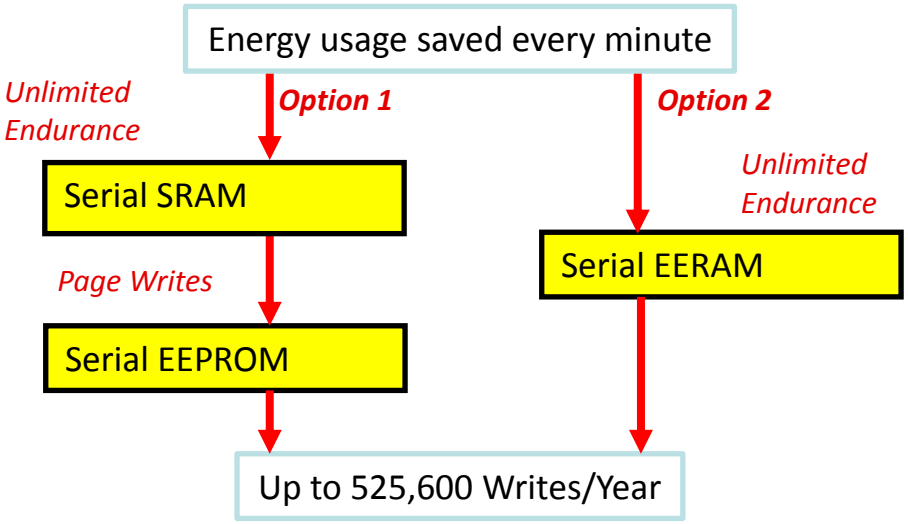

- **Calibration:**
  - Calibration parameters stored in non-volatile memory

<< BACK to BLOCK DIAGRAM

Human Interface Solutions

- **Display**
  - Graphics
  - Segmented LCD
  - Monochrome
  - Full color
- **Touch sense**
  - Capacitive touch
  - Resistive touch screens
  - Tactile buttons
  - Rotary switches
- **Audio and speech**

www.microchip.com/humaninterface

<< BACK to BLOCK DIAGRAM

Data Communication

- **Methods vary based on application requirements**
  - Physical environments
  - Standard protocol interfaces
- **Wireless**
  - ZigBee, WiFi, MiWi, Z-Wave, proprietary
- **Wired**
  - PLC, Ethernet, USB, Home Plug, BACnet, proprietary
- **Protocols**
  - DLMS, COSEM, Smart Energy Profile

NEXT

Microchip Wi-Fi Solution

- Driver incorporated into Microchip TCP/IP stack
- Compatibility across nearly every major Microchip MCU family
- Demo Source Code and Applications
- PICtails and PICtail-based development kits shipping now

NEXT

Microchip Sub-GHz Wireless Solutions

- **Multiple frequency options**
  - 868/915/950 MHz
  - FSK/OOK Modulation
- **Low current operation**
  - Low Rx Current = 3 mA
  - Low Tx Current = 25 mA @ +10 dBm
- **Integrated power amplifier (+12.5 dBm)**
- **High receiver sensitivity**
  - -107 dBm FSK/ -113dBm OOK)
- **Automatic frequency control (AFC)**

- **Module features:**
  - FCC (U.S.A.), IC (Canada), and ETSI (Europe) compliant
  - Surface-mountable PCB

NEXT

Microchip 2.4 GHz Solutions

- **Transceiver Features:**
  - Supports MiWi™, MiWi P2P & ZigBee®
  - 2.4GHz IEEE 802.15.4 compliant
  - In-line/stand-alone encryption
  - Automatic MAC retransmit
  - 18 mA(RX)/22 mA(TX)/2 µA(Sleep)
- **Module Features:**
  - Integrated PCB antenna
  - FCC (U.S.A.), IC (Canada), and ETSI (Europe) certified

ZigBee® Alliance
Wireless Control That Simply Works

NEXT

PLC

	ATPL230A	ATPL250A	SAM4CP16B	SAM4CP16C
Standard	PRIME	G3	PRIME	G3
Band	< 500 kHz	< 500 kHz	< 500 kHz	< 500 kHz
Core	-	-	Dual Cortex-M4	Dual Cortex-M4
CPU Clock	-	-	120 MHz @core	120 MHz @core
Flash	-	-	1 MB	1 MB
SRAM	-	-	128+16+8 KB	128+16+8 KB
Package	LQFP80	LQFP80	LQFP176	LQFP176
Pin to Pin	YES		YES	
Availability	In production	In production	In production	In production

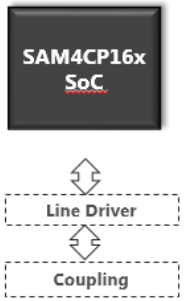

<< BACK to BLOCK DIAGRAM

Analog Products in Automotive: Heating, Ventilation and Air Conditioning (HVAC) system

<< BACK to CONTENTS

NEXT

Automotive HVAC

- **Automotive HVAC control**
  - Automotive heating, ventilation and air conditioning (HVAC) system is designed to provide passengers' desired cabin temperature while keeping the engine from overheating
- **Microchip offers comprehensive solutions to control HVAC applications such as fans, blowers, pumps, condensers and compressors to efficiently achieve such tasks**

NEXT

Automotive - HVAC

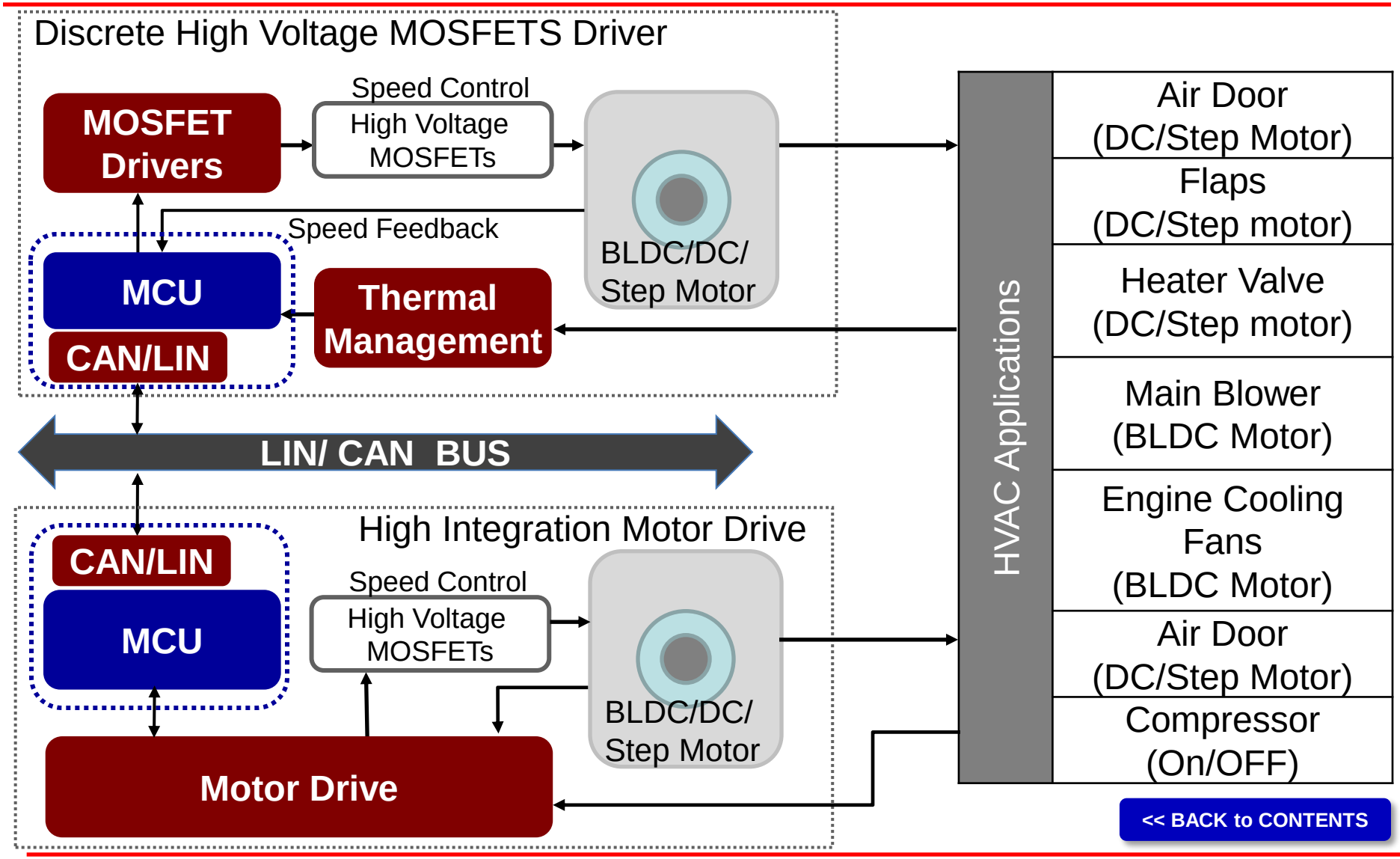

<< BACK to CONTENTS

Motor Drive

Popular Products	Description	Product Web Page
MCP8024/5/6 MTD6501 MCP8063 MTD6505/8 ATA6823/24C	Standalone motor controllers/drivers and MCU companion ICs for BLDC (brushless DC), PMS (Permanent Magnetic Synchronous Motor), brush DC, and stepper motors	Motor Drive Parametric Search table
ATA6826C ATA6831/31C ATA6836/38C	3-fold and 6-fold integrated half bridge drivers for controlling up to 5 DC motors up to 1A each	Motor Driver Parametric Search table

<< BACK to BLOCK DIAGRAM

MOSFET Drivers

Popular Products	Description	Product Web Page
MCP140X MCP141X MCP14628 MAQ4123/4/5	Low-side and low-side/high-side drivers	MOSFET Driver's Parametric Search table

<< BACK to BLOCK DIAGRAM

Thermal Management

Suggested Products	Description	Product Web page
MCP9700/ MCP9800/	Improves control of color temperature and detects disconnected LED channel. MCP9700 outputs analog voltage that is proportional to the temperature (-40C to 150C). MCP9800 outputs temperature data (-55C to 125C) via I²C™/SMBus two-wire interface.	MCP9700 MCP9800
EMC2101	The EMC2101 is an SMBus 2.0 compliant, integrated fan control solution complete with two temperature monitors, one external and one internal. Each temperature channel has programmable high limits that can assert an interrupt.	EMC2101
EMC1412	The EMC1412 is a high accuracy, low cost, System Management Bus (SMBus) temperature sensor. Advanced features such as Resistance Error Correction (REC), Beta Compensation and automatic diode type detection combine to provide a robust solution for complex environmental monitoring applications.	EMC1412

<< BACK to BLOCK DIAGRAM

MCU

Suggested Products	Description	Product Web page
PIC16F1829LIN	8-bit MCU with an integrated LIN transceiver.	PIC16F1829LIN
PIC18FXX31	8-bit MCU with LIN slave support	PIC18FXX31
PIC18F4680	8-bit MCU with enhanced CAN module and LIN master/slave support	PIC18F4680
PIC24/dsPIC33	16-bit MCU and DSC with enhanced CAN controller and LIN master/slave support. Supports Sensorless field-oriented motor control algorithm to achieve stunning performance.	PIC24/dsPIC33

NEXT: CAN/LIN Communication

<< BACK to BLOCK DIAGRAM

CAN/LIN Communication

	Suggested Products	Description	Product Web page
LIN	ATA663203	Stand-alone LIN LDO	LIN Design Center
	ATA663211 ATA6662C/63/4	Globally automotive approved and qualified Stand-alone transceiver	
	ATA6670	Globally automotive approved and qualified Stand-alone Dual LIN transceiver	
	ATA663231/32/54/55 ATA6625, ATA6629/31 MCP2021A/2A/25	Globally automotive approved and qualified Stand-alone transceiver + 3.3V or 5V Voltage Regulator	
	MCP2050, ATA663431/54 ATA6628/30, ATA6622C/24C/26C	Globally automotive approved and qualified Stand-alone transceiver + 3.3V or 5V Voltage Regulator + Window Watchdog Timer	
	ATA663331/54	Globally automotive approved and qualified Stand-alone transceiver + 3.3V or 5V Voltage Regulator + 2x Relay Driver	
	ATA664151	Globally automotive approved and qualified Stand-alone transceiver + 3.3V or 5V Voltage Regulator + 8x HV Switches	
	ATA6612C/13C/ 14Q/16C/17C ATSAMHA1G, PIC16F1829LIN	8-bit MCU with an integrated LIN transceiver + Voltage Regulator	
CAN, CAN FD	MCP2515	External CAN controller supports CAN V2.0B specification Can also interface with MCU with Standard SPI.	CAN Design Center
	MCP25625	CAN 2.0 external Controller + Transceiver	
	MCP2561/2	Globally automotive approved and qualified, High Speed CAN Transceivers	
	MCP2561/2FD, ATA6560/61	Globally automotive approved and qualified CAN Flexible Data-rate (CAN FD) Transceivers	
	MCP25612FD	Dual CAN 2.0 or CAN FD Transceiver	

<< BACK to BLOCK DIAGRAM

Voltage Regulators: Buck Converters

Popular Products	Description	Product Web Page
MIC28511	The MIC28511 is a synchronous step-down switching regulator with integrated high-side and low-side N-channel MOSFETs capable of providing up to 3A output current from a wide input supply range from 4.6V to 60V. The output voltage is adjustable down to 0.8V with a guaranteed accuracy of ±1%. A constant switching frequency can be programmed from 200kHz to 680kHz	Click Here
MIC28512	The MIC28512 is a synchronous step-down switching regulator with integrated high-side and low-side N-channel MOSFETs capable of providing up to 2A output current from a wide input supply range from 4.6V to 70V. The output voltage is adjustable down to 0.8V with a guaranteed accuracy of Â±1%. A constant switching frequency can be programmed from 200kHz to 680kHz.	Click Here
MIC28513	The MIC28513 is a synchronous step-down switching regulator with integrated high-side and low-side N-channel MOSFETs capable of providing up to 4A output current from a wide input supply range from 4.6V to 45V. The output voltage is adjustable down to 0.8V with a guaranteed accuracy of ±1%. A constant switching frequency can be programmed from 200kHz to 680kHz.	Click Here

<< BACK to BLOCK DIAGRAM

Automotive Infotainment

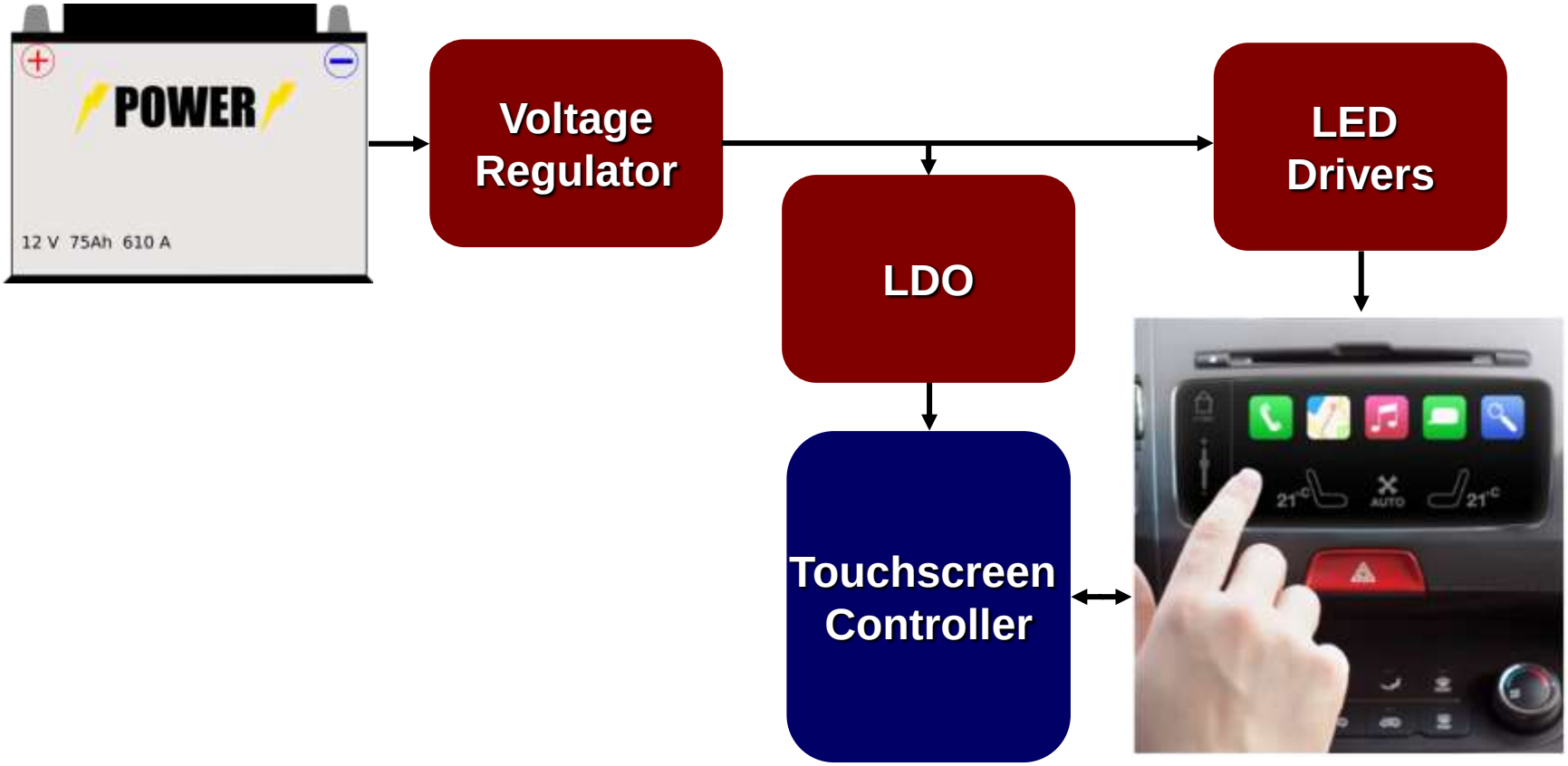

<< BACK to CONTENTS

Low-Dropout Regulators

Popular Products	Description	Product Web Page
MIC5323	The MIC5323 is a high-performance, 300mA LDO regulator, offering extremely high PSRR and very low noise while consuming low ground current. The MIC5323 features 2% accuracy, extremely low dropout voltage (120mV at 300mA), and low ground current at light load (typically 90µA).	Click Here
MCP1824S	The MCP1845S is a 300 mA, ceramic output cap stable, low output voltage, Low Dropout Voltage Regulator. It is a part of the family of LDOs that includes 500 mA MCP1825S, 1A MCP1826S and 1.5A MCP1827S.	Click Here

<< BACK to BLOCK DIAGRAM

LED Driver

Popular Products	Description	Product Web Page
MIC3263	The MIC3263 is a high-efficiency pulse-width modulation (PWM) boost switching regulator that is optimized for constant-current WLED driver backlighting applications. The MIC3263 drives six channels of up to ten WLEDs per channel. Each channel is matched in current to within ±3% for constant brightness across the screen and can be programmed from 15mA to 30mA. The MIC3263 provides a very flexible dimming control scheme with better accuracy and noise immunity.	Click Here

<< BACK to BLOCK DIAGRAM

Touchscreen Controllers

Popular Products	Description	Product Web Page
mXT1665 mXT799	maXTouch® touchscreen controllers use patented charge transfer technology and AVR® microcontroller (MCU) technology to provide unlimited touch (up to 16 touches), fast response time and smart processing of a capacitive touch image, which accurately regenerates and reports the user's interaction with the touchscreen. Multitouch performance identifies and individually tracks touches, while allowing a range of built-in gestures to be reported to the host processor.	Click Here

<< BACK to BLOCK DIAGRAM

Analog Products in Automotive: Interior LED Ambient Module

<< BACK to CONTENTS

NEXT

Automotive LED Lighting

- **Interior Automotive LED ambient Module:**
  - LED ambient module controls an integrated RGB LEDs unit, which enables real-time LEDs color and brightness control. With this design, interior lightings are no longer monotonic. Adjustable multicolor allows passengers for a more personalized ambient lighting experience. The small size of LEDs also makes implementing lighting in small spaces easier.
- **Application examples**
  - Foot well lights, cup holder lights, cluster backlighting, Tell Tale lights, and LCD panel backlighting

NEXT

Automotive: Interior LED Ambient Module

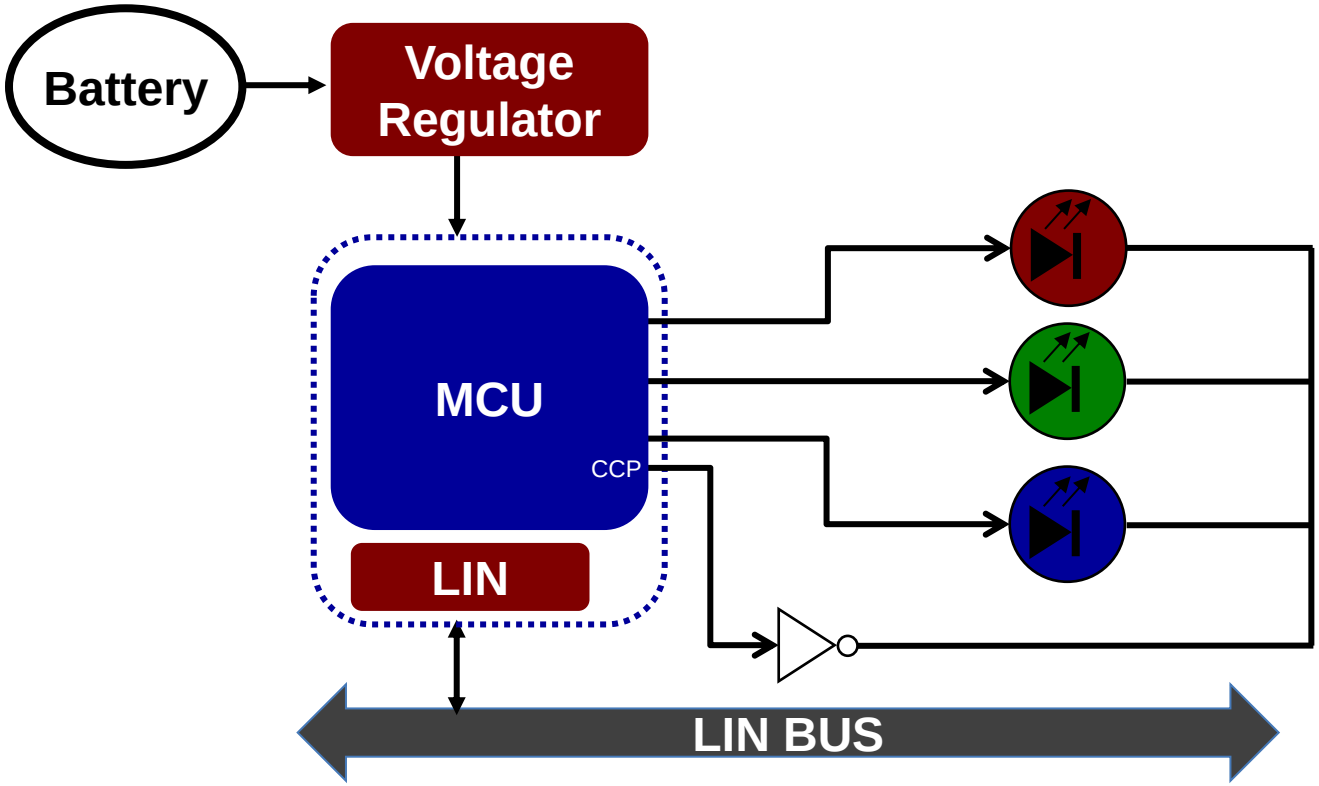

LED ambient module controls an integrated RGB LEDs unit, which enables real-time LEDs color and brightness control

<< BACK to CONTENTS

MCU: RGB LED Controller

Suggested Products	Description	Product Web Page
8-bit PIC12/16/18 MCU	• Integrated DAC or PWM modules are used to control LEDs color or brightness. • The resolution of the DAC or PWM for the selected MCU is directly proportional to the number of color combination capable of being created with the RGB LEDs. • CCP module is used to detect defect. • NanoWatt XLP microcontrollers from the PIC16/ PIC18 families have the industry leading low quiescent current characteristics. • These MCUs further conserve battery life when LEDs are on while ignition is off. • Small MCU footprints are available to support the desired styling factor for various lighting components.	Click Here

<< BACK to BLOCK DIAGRAM

LIN

	Suggested Products	Description	Product Web page
LIN	ATA663203	Stand-alone LIN LDO	LIN Design Center
	ATA663211 ATA6662C/63/4	Globally automotive approved and qualified Stand-alone transceiver	
	ATA6670	Globally automotive approved and qualified Stand-alone Dual LIN transceiver	
	ATA663231/32/54/55 ATA6625, ATA6629/31 MCP2021A/2A/25	Globally automotive approved and qualified Stand-alone transceiver + 3.3V or 5V Voltage Regulator	
	MCP2050, ATA663431/54 ATA6628/30, ATA6622C/24C/26C	Globally automotive approved and qualified Stand-alone transceiver + 3.3V or 5V Voltage Regulator + Window Watchdog Timer	
	ATA663331/54	Globally automotive approved and qualified Stand-alone transceiver + 3.3V or 5V Voltage Regulator + 2x Relay Driver	
	ATA664151	Globally automotive approved and qualified Stand-alone transceiver + 3.3V or 5V Voltage Regulator + 8x HV Switches	
	ATA6612C/13C/ 14Q/16C/17C ATSAMHA1G, PIC16F1829LIN	8-bit MCU with an integrated LIN transceiver + Voltage Regulator	
CAN, CAN FD	MCP2515	External CAN controller supports CAN V2.0B specification Can also interface with MCU with Standard SPI.	CAN Design Center
	MCP25625	CAN 2.0 external Controller + Transceiver	
	MCP2561/2	Globally automotive approved and qualified, High Speed CAN Transceivers	
	MCP2561/2FD, ATA6560/61	Globally automotive approved and qualified CAN Flexible Data-rate (CAN FD) Transceivers	
	MCP25612FD	Dual CAN 2.0 or CAN FD Transceiver	

<< BACK to BLOCK DIAGRAM

Voltage Regulators

Suggested Products	Description	Product Web Page
MCP1790/1	The low power, low dropout regulator is used to reduce battery depletion while the vehicle is in the *ignition off* condition. This product meets the current low power requirements of automakers.	Click Here
MAQ5300	The MAQ5300 is an automotive-qualified, ultra-small, ultra low dropout CMOS regulator (ULDO) that is ideal for today's most demanding automotive applications including infotainment, camera module, image sensors, and anywhere PCB space is limited.	Click Here

<< BACK to BLOCK DIAGRAM

Analog Products in Automotive: Exterior LED Control Module

<< BACK to CONTENTS

NEXT

Automotive LED Lighting

- **Microchip offers broad range of high brightness LED control solutions for automotive exterior lightings. These solutions support flexible power train topologies to support constant LED current regulation, fail-safe monitoring and maximization of LEDs lifetime and efficiency.**
- **Example Applications:**
  - Fog lights, Taillights, Daytime running light, position light High/Low Beam, corner light. Headlamp

NEXT

Automotive: Exterior LED Control Module

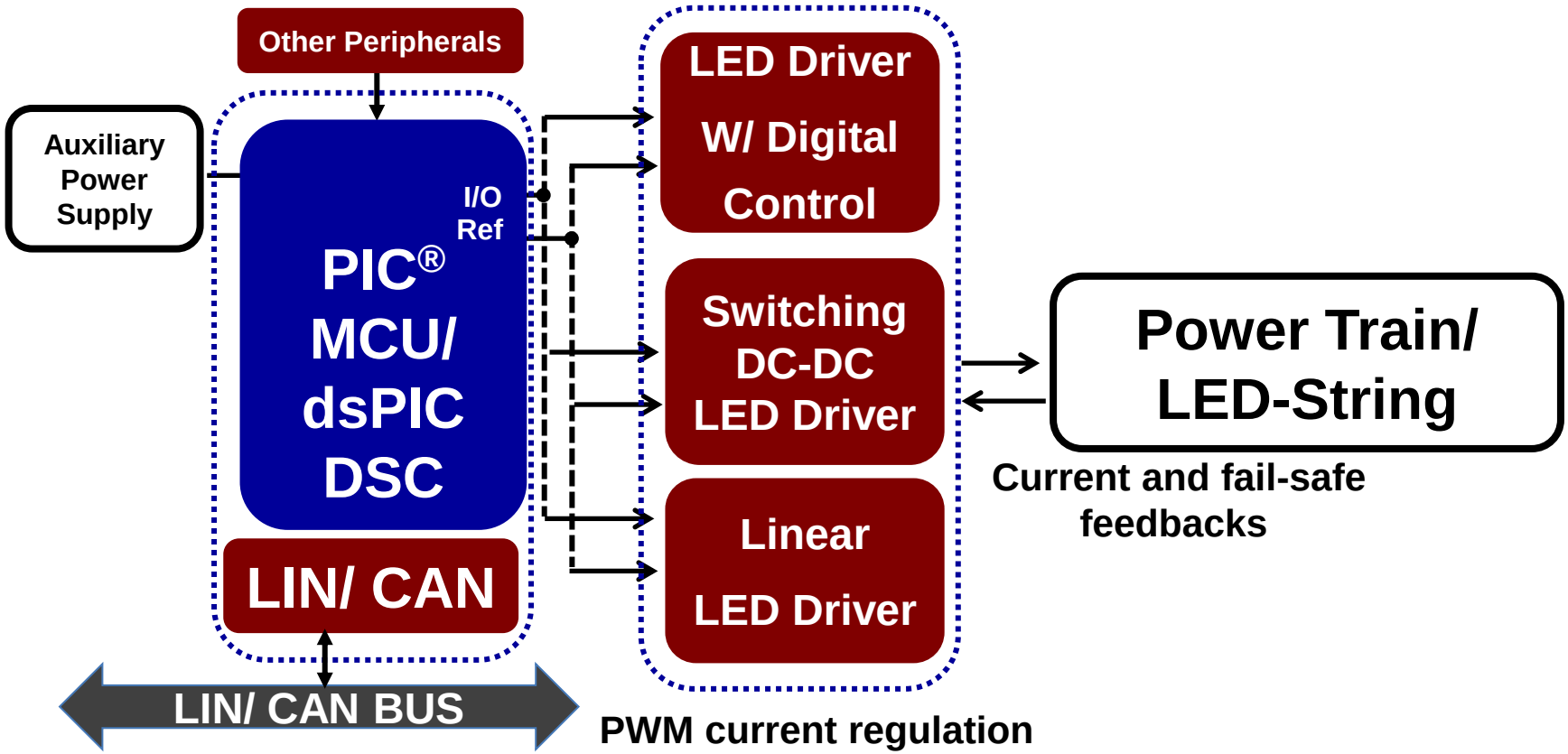

Low- End Single LED String Solution

Mid- Range Mult. LED String Solution

High- End Mult. LED String Solution

<< BACK to CONTENTS

MCU

Suggested Products	Description	Product Web Page
PIC12F683/ PIC12HV752	• Ideal for low-end LED drivers such as fog light/turn light, which has lower stability requirements than most exterior front light units and doesn't require dimming • Hysteretic Current control • Integrated analog peripherals with minimum digital support for low-cost/high performance SMPS applications	PIC12F683
dsPIC33F GS family	• Ideal for High End Multi. LED String Solution • Multi-channel control (up to 18 LED channels) • Up to 18 high-speed PWM channels (1.04ns resolution) • Each PWM output can be individually adjusted in frequency, duty ratio and phase shift. • Each PWM output can be chopped by a lower frequency to support flexible dimming outputs.	dsPIC33F/E
PIC16F1829LIN	8-bit MCU with an integrated LIN transceiver	PIC16F1829 LIN

<< BACK to BLOCK DIAGRAM

Low-End Single LED String Solution

- **For low-end single LED string solution, a low cost 8-bit PIC MCU can be used to provide close-loop single LED string current regulation.**

Suggested Products	Description
PIC12F683/PIC12HV752	• Ideal for low-end LED drivers such as fog light/turn light, which has lower stability requirements than most exterior front light units and doesn't require dimming • Hysteretic Current control • Integrated analog peripherals with minimum digital support for low-cost/high performance SMPS applications

<< BACK to BLOCK DIAGRAM

Mid-Range Mult. LED String Solution

- **More than one discrete PWM controllers can be added to a low cost PIC MCU to support the additional LED strings.**
  - The PWM controller provides additional built-in analog modules and MOSFET driver needed for each LED string control.
  - This approach is also ideal for an existing system that already has a low cost MCU in place. Instead of replacing the MCU, designer can attach the additional PWM controllers to the MCU.

NEXT

Programmable LED Driver

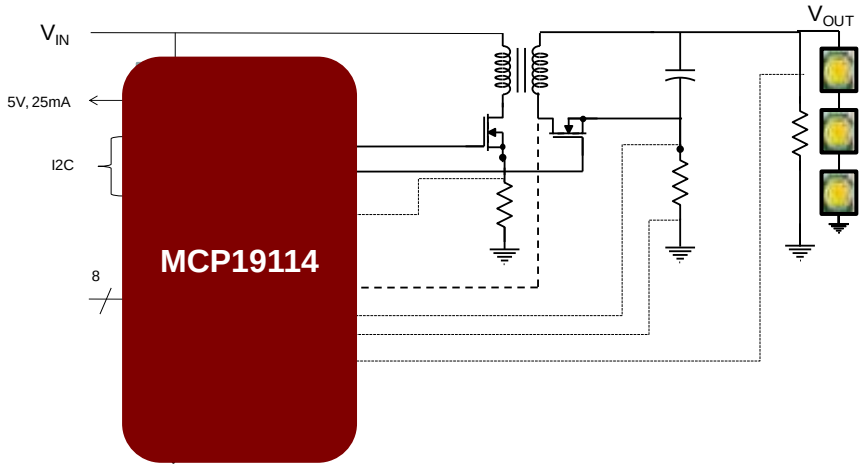

SEPIC Topology

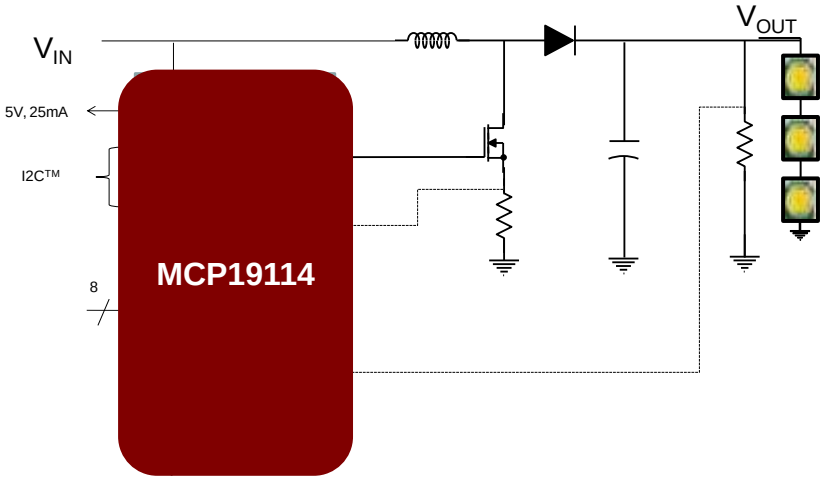

Boost Topology

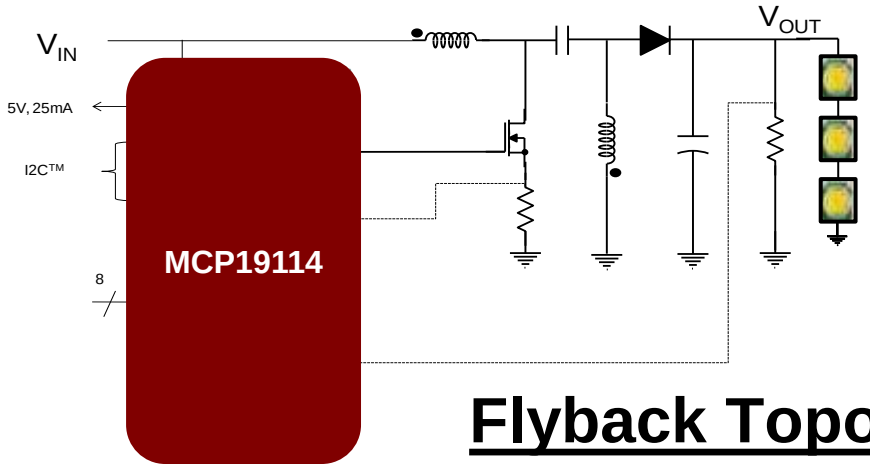

Flyback Topology

(Synchronous)

…and more, including Ćuk and Forward Converters (Broad Topology Support)

<< BACK to BLOCK DIAGRAM

NEXT

MCP19114

Popular Products	Description	Product Web Page
MCP19114/5	The MCP19114 is a mid-voltage (4.5-42V) analog-based PWM controller with an integrated 8-bit PIC™ Microcontroller. This unique product family combines the performance of a high-speed analog solution, including high-efficiency and fast transient response, with the configurability and communication interface of a digital solution. Combining these solution types creates a new family of devices that maximizes the strengths of each technology to create a more cost-effective, configurable, high-performance power conversion solution.	Click Here
MCP19114 Flyback Standalone Evaluation Board: The MCP19114-Flyback Standalone Evaluation Board and Graphical User Interface (GUI) demonstrate the MCP19114 performance in a synchronous Flyback topology. It is configured to regulate load current, and is well suited to drive LED loads.		

<< BACK to BLOCK DIAGRAM

MCU + PWM Controller based LED Driver

Suggested Products	Description	Product Web Page
MCP1630/31/32	• Small footprint discrete high-speed PWM controllers (2MHz), as stand alone (MCP1632) or in conjunction with a MCU (MCP1630/1) • Single MCU attaches multiple PWM controllers for desired number of LED strings control (One LED string per MCP1630/31). • Peak Current Mode Control. • High Voltage Options Operate to +16V Input. • Integrated Overvoltage Comparator and Low Side MOSFET Driver. • Over-temperature Protection and Under-voltage Lockout (UVLO).	MCP1630 MCP1631 MCP1632
App Notes/ Ref. Designs	• Dimming Power LEDs Using a SEPIC Converter and MCP1631 PIC Attach PWM Controller • MCP1630 SEPIC Automotive LED Driver Reference Design • MCP1632 - 300 kHz Boost Converter Demo Board	

<< BACK to BLOCK DIAGRAM

DC-DC LED Driver

Suggested Products	Description	Product Web Page
AT9917	The fixed frequency PWM IC designed to control single-switch, boost, SEPIC, and buck LED drivers in a constant current mode. An internal 40V linear regulator powers the IC eliminating the need for a separate power supply for the IC.	AT9917
AT9919	The PWM controller IC designed to drive high brightness LEDs using a buck topology. Operation at high switching frequency is possible since the hysteretic control maintains accuracy even at high frequencies.	AT9919
AT9932	The controller IC designed to control an LED lamp driver using a boost-buck topology that can step the input voltage up or down automatically. Capacitive isolation protects the LED Lamp from failure of the switching MOSFET.	AT9932
AT9933	The controller IC designed to control an LED lamp driver using a low-noise boost-buck (Ćuk) topology. The AT9933 uses patent-pending hysteretic current-mode control to regulate both the input and the output currents.	AT9933
MAQ3203	The is a hysteretic, step-down, constant-current, High-Brightness LED (HB LED) driver. The hysteretic control gives good supply rejection and fast response during load transients and PWM dimming.	MAQ3203

<< BACK to BLOCK DIAGRAM

Linear LED Driver

Suggested Products	Description	Product Web Page
CL2 / CL25	The is a high voltage, temperature compensated, constant current source and is trimmed to provide a constant current of 20/25mA. The device can be used as a two terminal constant current source or constant current sink.	CL2 CL25
CL320 / CL325 / CL330	The family is designed to drive 3 strings of LEDs at a constant current of 20/30/50mA. Separate enable pins for each channel allow for PWM dimming, 3-step linear dimming, or individual disconnection of faulty LED strings.	CL320 CL325 CL330
CL520 / CL525	This is a fixed, linear current regulator designed for driving LEDs at 20/25mA. The minimum dropout voltage of 1.0V accommodates extra LEDs, permits lower supply voltages, and provides more efficient operation.	CL520 CL525
CL6 / CL7	This is a fixed, linear current regulator designed for driving high brightness LEDs at 100mA from nominal 12V, 24V, or 48V supplies.	CL6 CL7

<< BACK to BLOCK DIAGRAM

High- End Mult. LED String Solution

- For high-end multi LED strings solution, a 16-bit DSC (dsPIC33F GS) is recommended because it has the necessary integrated PWM drivers and analog modules to provide up to 18 LED strings or Matrix control. With this approach, discrete PWM controllers are not needed.

NEXT

dsPIC33F

Suggested Products	Description	Product Web Page
dsPIC33F/E GS family	• Ideal for High End Multi. LED String Solution • Multi-channel control (up to 18 LED channels) • Up to 18 high-speed PWM channels (1.04ns resolution) • Each PWM output can be individually adjusted in frequency, duty ratio and phase shift. • Each PWM output can be chopped by a lower frequency to support flexible dimming outputs.	dsPIC33F/E
App Notes/ Ref. Designs	• High Brightness LEDs by dsPIC® “GS” Series (doc# en550157.pdf) • Digital LED Lighting Development Kit (DM330014)	

<< BACK to BLOCK DIAGRAM

CAN/ LIN Communication

	Suggested Products	Description	Product Web page
LIN	ATA663203	Stand-alone LIN LDO	LIN Design Center
	ATA663211 ATA6662C/63/4	Globally automotive approved and qualified Stand-alone transceiver	
	ATA6670	Globally automotive approved and qualified Stand-alone Dual LIN transceiver	
	ATA663231/32/54/55 ATA6625, ATA6629/31 MCP2021A/2A/25	Globally automotive approved and qualified Stand-alone transceiver + 3.3V or 5V Voltage Regulator	
	MCP2050, ATA663431/54 ATA6628/30, ATA6622C/24C/26C	Globally automotive approved and qualified Stand-alone transceiver + 3.3V or 5V Voltage Regulator + Window Watchdog Timer	
	ATA663331/54	Globally automotive approved and qualified Stand-alone transceiver + 3.3V or 5V Voltage Regulator + 2x Relay Driver	
	ATA664151	Globally automotive approved and qualified Stand-alone transceiver + 3.3V or 5V Voltage Regulator + 8x HV Switches	
	ATA6612C/13C/ 14Q/16C/17C ATSAMHA1G, PIC16F1829LIN	8-bit MCU with an integrated LIN transceiver + Voltage Regulator	
CAN, CAN FD	MCP2515	External CAN controller supports CAN V2.0B specification Can also interface with MCU with Standard SPI.	CAN Design Center
	MCP25625	CAN 2.0 external Controller + Transceiver	
	MCP2561/2	Globally automotive approved and qualified, High Speed CAN Transceivers	
	MCP2561/2FD, ATA6560/61	Globally automotive approved and qualified CAN Flexible Data-rate (CAN FD) Transceivers	
	MCP25612FD	Dual CAN 2.0 or CAN FD Transceiver	

<< BACK to BLOCK DIAGRAM

Other Analog Peripherals

	Suggested Products	Description	Product Web Page
Voltage Regulators	MCP170X family	The low power, low dropout regulator is used to reduce battery depletion while the vehicle is in the *ignition off* condition. This product meets the current low power requirements of automakers.	LDO Parametric Table
Temperature Sensors	MCP9700/ MCP9800/	Improves control of color temperature and detects disconnected LED channel. MCP9700 outputs analog voltage that is proportional to the temperature (-40C to 150C). MCP9800 outputs temperature data (-55C to 125C) via I²C™/SMBus two-wire interface.	MCP9700 MCP9800
	EMC2101	The EMC2101 is an SMBus 2.0 compliant, integrated fan control solution complete with two temperature monitors, one external and one internal. Each temperature channel has programmable high limits that can assert an interrupt.	EMC2101
	EMC1412	The EMC1412 is a high accuracy, low cost, System Management Bus (SMBus) temperature sensor. Advanced features such as Resistance Error Correction (REC), Beta Compensation and automatic diode type detection combine to provide a robust solution for environmental monitoring applications.	EMC1412

<< BACK to BLOCK DIAGRAM

Analog Products in Automotive: Smart Actuators in Turbo Charger

<< BACK to CONTENTS

NEXT

Automotive: Smart Actuators in Turbo Charger

- **Smart Actuators are actuators that use microcontrollers to perform intelligent tasks. They are being utilized more and more in the automotive engine environment to enhance fuel efficiency.**

- **Example Applications:**
  - Turbo Charger Waste Gate; the Electrical Turbo Charger Bypass, and the Air/Exhaust Bypassing Valves.

NEXT

Turbo Charger Waste Gate w/Smart Actuator Controller

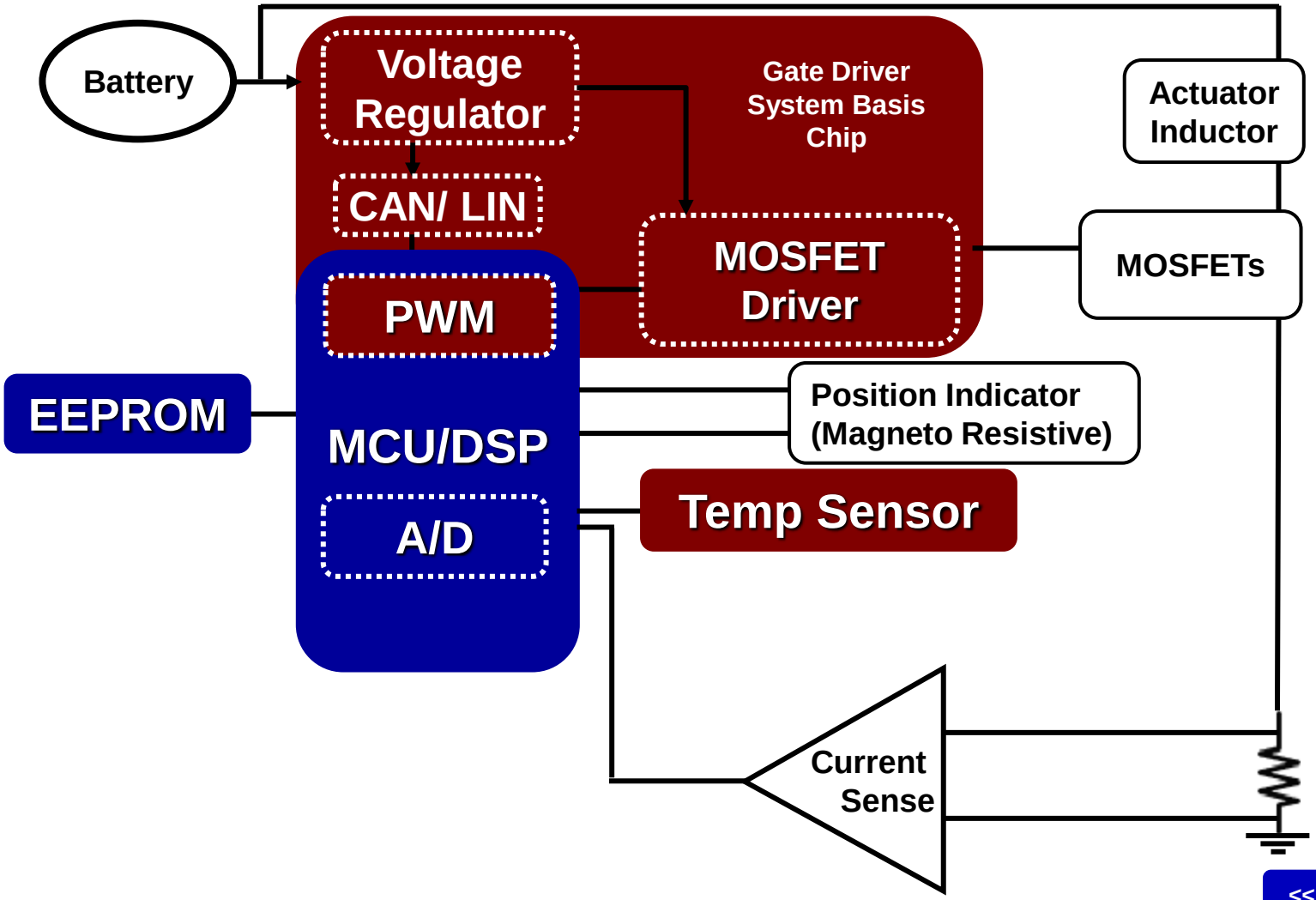

<< BACK to CONTENTS

CAN/ LIN Communication

	Suggested Products	Description	Product Web page
LIN	MCP2003B	Globally automotive approved and qualified Stand-alone transceiver	LIN Design Center
	MCP2021A/2A MCP2025	Globally automotive approved and qualified Stand-alone transceiver + 3.3V or 5V Voltage Regulator	
	MCP2050	Globally automotive approved and qualified Stand-alone transceiver + 3.3V or 5V Voltage Regulator + Window Watchdog Timer	
	PIC16F1829LIN	8-bit MCU with an integrated LIN transceiver.	
CAN, CAN FD	MCP2515	External CAN controller supports CAN V2.0B specification Can also interface with MCU with Standard SPI.	CAN Design Center
	MCP25625	CAN 2.0 external Controller + Transceiver	
	MCP2561/2	Globally automotive approved and qualified High Speed CAN Transceivers	
	MCP2561/2FD	Globally automotive approved and qualified CAN Flexible Data-rate (CAN FD) Transceivers	
	MCP25612FD	Dual CAN 2.0 or CAN FD Transceiver	

<< BACK to BLOCK DIAGRAM

Motor Drive

Popular Products	Description	Product Web Page
MCP8024/5/6 MTD6501 MCP8063 MTD6505/8 ATA6823/24C	Standalone motor controllers/drivers and MCU companion ICs for BLDC (brushless DC), PMS (Permanent Magnetic Synchronous Motor), brush DC, and stepper motors	Motor Drive Parametric Search table
ATA6826C ATA6831/31C ATA6836/38C	3-fold and 6-fold integrated half bridge drivers for controlling up to 5 DC motors up to 1A each	Motor Driver Parametric Search table

<< BACK to BLOCK DIAGRAM

Thermal Management

Suggested Products	Description	Product Web page
MCP9700/ MCP9800/	Improves control of color temperature and detects disconnected LED channel. MCP9700 outputs analog voltage that is proportional to the temperature (-40C to 150C). MCP9800 outputs temperature data (-55C to 125C) via I²C™/SMBus two-wire interface.	MCP9700 MCP9800
EMC2101	The EMC2101 is an SMBus 2.0 compliant, integrated fan control solution complete with two temperature monitors, one external and one internal. Each temperature channel has programmable high limits that can assert an interrupt.	EMC2101
EMC1412	The EMC1412 is a high accuracy, low cost, System Management Bus (SMBus) temperature sensor. Advanced features such as Resistance Error Correction (REC), Beta Compensation and automatic diode type detection combine to provide a robust solution for complex environmental monitoring applications.	EMC1412
MIC280	The MIC280 is a digital thermal supervisor capable of measuring its own internal temperature and that of a remote PN junction. The remote junction may be an inexpensive commodity transistor, e.g., 2N3906, or an embedded thermal diode.	MIC280

<< BACK to BLOCK DIAGRAM

MOSFET Drivers

Popular Products	Description	Product Web Page
MCP140X, MCP141X, MCP14628, MCP14700, MIC441X, MIC442X, MAQ412X	Low-side and low-side/high-side drivers. Used as a low-to-high voltage bridge to allow an MCU with a low voltage output to drive a motor that requires higher voltage	MOSFET Driver's Parametric Search table

<< BACK to BLOCK DIAGRAM

Voltage Regulators

Suggested Products	Description	Product Web Page
MCP1790/1	The low power, low dropout regulator is used to reduce battery depletion while the vehicle is in the *ignition off* condition. This product meets the current low power requirements of automakers.	MCP1790
MAQ528X	The MAQ5280/5282/5283 high-performance linear regulators offers a very-wide input operating voltage range, up to 120V DC, and supplies an output current of up to 25mA, 50mA, and 150mA, respectively..	MAQ5283

<< BACK to BLOCK DIAGRAM

PWM Controller

Suggested Products	Description	Product Web Page
MCP1630/31	• Small footprint discrete high-speed PWM controllers (2MHz) in conjunction with a MCU. • Single MCU attaches multiple PWM controllers for desired number of LED strings control (One LED string per MCP1630/31). • Peak Current Mode Control. • High Voltage Options Operate to +16V Input. • Integrated Overvoltage Comparator and Low Side MOSFET Driver. • Over-temperature Protection and Under-voltage Lockout (UVLO).	MCP1630 MCP1631

<< BACK to BLOCK DIAGRAM

EEPROM

Suggested Products	Description	Product Web Page
24LCxxx Family 25LCxxx Family	A standalone serial data EEPROM is used to provide cost-effective data storage options for position logging or position calibration.	Serial EEPROM
11LCxxx Family	Microchip's new UNI/O™ serial EEPROM uses only one connection to the host microcontroller. This compares to two or three pins for I2C™ and three to six pins for Microwire or SPI buses. This new, proprietary bus offers advanced features like a status register and write protection on demand, along with all I/O, memory array and command functions through a single pin.	

<< BACK to BLOCK DIAGRAM

MCU

Suggested Products	Description	Product Web Page
8-bit PIC12/PIC16 MCU	Provides simple control for rotary or linear switches, such as for use in relays and valves. Acts as a gateway between a specific position indicator interface such as SENT and a standard serial interface such as SPI/I2C. Controls the BLDC motor.	Click Here
16-bit PIC24 MCU / dsPIC33 DSC	Used in applications that require digital filtering and high-end algorithms, such as the calculation of actuator positions from real-time analog Sine and Cosine signals. Controls BLDC motor. Supports AUTOSAR.	Click Here
PIC16F1829LIN	8-bit MCU with an integrated LIN transceiver	Click Here

<< BACK to BLOCK DIAGRAM

Analog Products in Automotive: In-Vehicle Network Communication

<< BACK to CONTENTS

NEXT

In-Vehicle Network Communication

LIN Application Diagram

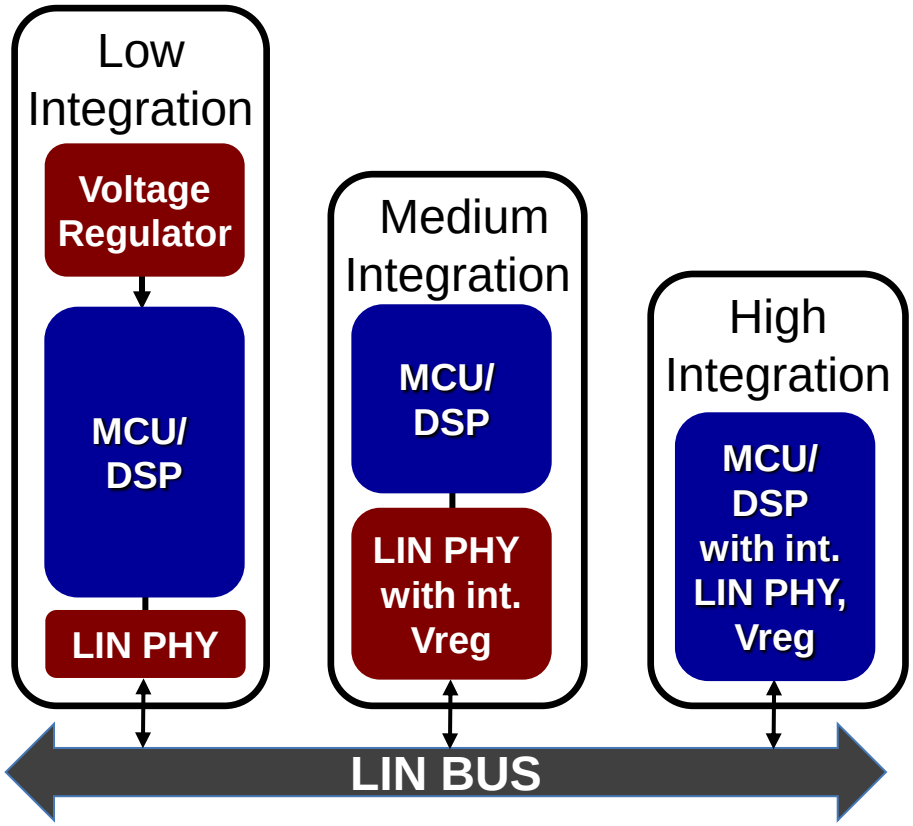

CAN Application Diagram

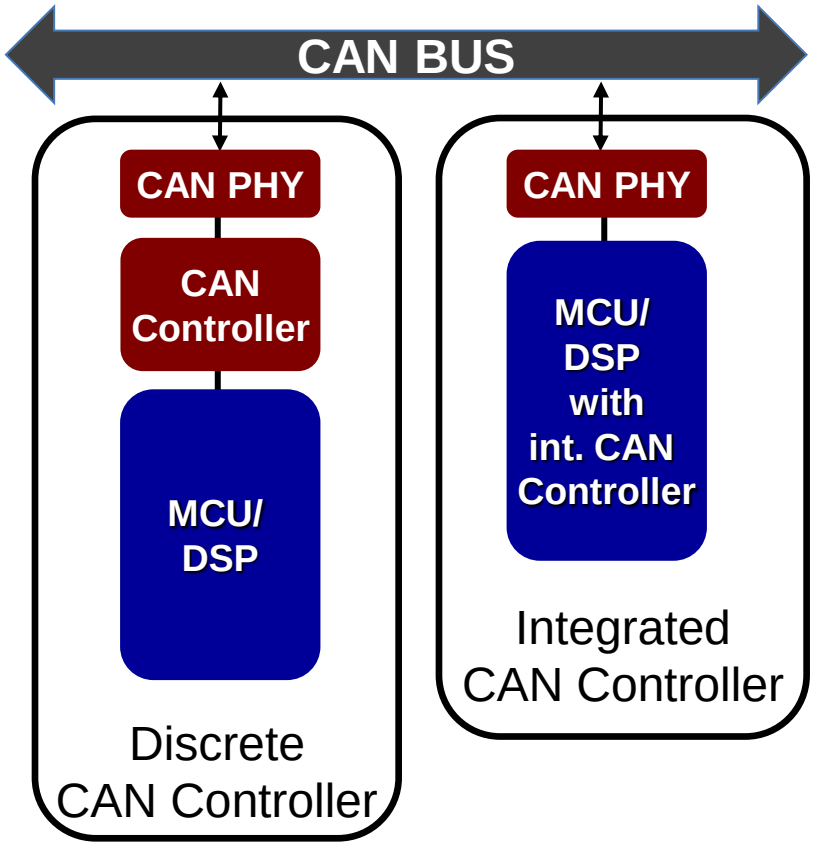

<< BACK to CONTENTS

Low Integration LIN Communication

Microchip Solutions	Suggested Products	Description
LIN	ATA663211 ATA6663/4 ATA6662C	LIN Transceiver LIN Design Center
	ATA6670	Dual LIN Transceiver
MCU and DSC with CAN/LIN Controller integrated	PIC16F690/PIC16F182x	8-bit MCU with LIN slave support
	PIC18F4680	8-bit MCU with enhanced CAN module and LIN master/slave support
	dsPIC30F4012	16-bit DSC with standard CAN module and LIN master/slave support
	PIC24/dsPIC33	16-bit MCU and DSP with enhanced CAN controller and LIN master/slave support
	PIC32Mx5xx/PIC32Mx7x	32-bit MCU with 32-bit CAN module and LIN master/slave support
Voltage Regulation	MCP1790/1 family	Fast transient response, Power Good, Shutdown Click Here
	MCP1824/5/6/7 family	Fixed & Adjustable, Power Good, Shutdown Click Here
	MAQ5280/1/2/3	120V, 25mA, 50mA, 150mA LDO Click Here
	MAQ5300	5.5V, 300mA LDO Click Here

<< BACK to BLOCK DIAGRAM

Medium Integration LIN Communication

Microchip Solutions	Suggested Products	Description
LIN	ATA663231/54 ATA663232/55 ATA6625 ATA6629/31 MCP2021A/2A MCP2025	LIN Transceiver + 3.3V or 5V LDO LIN Design Center
	ATA663431/54 ATA6628/30 ATA6622C/24C/26C MCP2050	LIN Transceiver + 3.3V or 5V LDO + Windowed Watchdog Timer LIN Design Center
	ATA663331/54	LIN Transceiver + 3.3V or 5V Voltage Regulator + 2x Relay Driver
	ATA664151	LIN Transceiver + 3.3V or 5V Voltage Regulator + 8x HV Switches
MCU and DSC with CAN/LIN Controller Integrated	PIC16F690/PIC16F182x	8-bit MCU with LIN slave support
	PIC18F4680	8-bit MCU with enhanced CAN module and LIN master/slave support
	dsPIC30F4012	16-bit DSC with standard CAN module and LIN master/slave support
	PIC24/dsPIC33	16-bit MCU and DSP with enhanced CAN controller and LIN master/slave support
	PIC32MX5XX/PIC32MX7X	32-bit MCU with 32-bit CAN module and LIN master/slave support

<< BACK to BLOCK DIAGRAM

High Integration LIN Communication

Microchip Solutions	Suggested Products	Description
LIN	ATA6612C/13C ATA6614Q ATA6616C/17C ATSAMHA1G PIC16F1829LIN	Small footprint 8-bit MCU + LIN Transceiver + Voltage Regulator LIN Design Center
	ATSAMHA1G	32-bit MCU + LIN Transceiver + Voltage Regulator
MCU and DSC with Integrated CAN/LIN Controller	PIC16F690/PIC16F182x	8-bit MCU with LIN slave support
	PIC18F4680	8-bit MCU with enhanced CAN module and LIN master/slave support
	dsPIC30F4012	16-bit DSC with standard CAN module and LIN master/slave support
	PIC24/dsPIC33	16-bit MCU and DSP with enhanced CAN controller and LIN master/slave support
	PIC32MX5XX/PIC32MX7X	32-bit MCU with 32-bit CAN module and LIN master/slave support

<< BACK to BLOCK DIAGRAM

Discrete CAN Controller

Microchip Solutions	Suggested Products	Description
CAN	MCP2515, MCP25625	External CAN Controller Products CAN Design Center
	ATA6560/61/62/63/64/65/66/70 MCP2561/2, MCP2561/2(FD), MCP25612FD	CAN and CAN FD Transceivers CAN Design Center
MCU and DSC with Integrated CAN Controller	PIC18F4680	8-bit MCU with enhanced CAN module and LIN master/slave support
	dsPIC30F4012	16-bit DSC with standard CAN module and LIN master/slave support
	PIC24/dsPIC33	16-bit MCU and DSP with enhanced CAN controller and LIN master/slave support
	PIC32MX5XX/PIC32MX7X	32-bit MCU with 32-bit CAN module and LIN master/slave support

<< BACK to BLOCK DIAGRAM

Integrated CAN Controller

Microchip Solutions	Suggested Products	Description
MCU and DSC with Integrated CAN/LIN Controller	PIC18F4680	8-bit MCU with enhanced CAN module and LIN master/slave support
	dsPIC30F4012	16-bit DSC with standard CAN module and LIN master/slave support
	PIC24/dsPIC33	16-bit MCU and DSP with enhanced CAN controller and LIN master/slave support
	PIC32MX5XX/PIC32MX7X	32-bit MCU with 32-bit CAN module and LIN master/slave support

<< BACK to BLOCK DIAGRAM

Analog Products in Home Security Alarm Systems

<< BACK to CONTENTS

NEXT

Home Security Alarm System

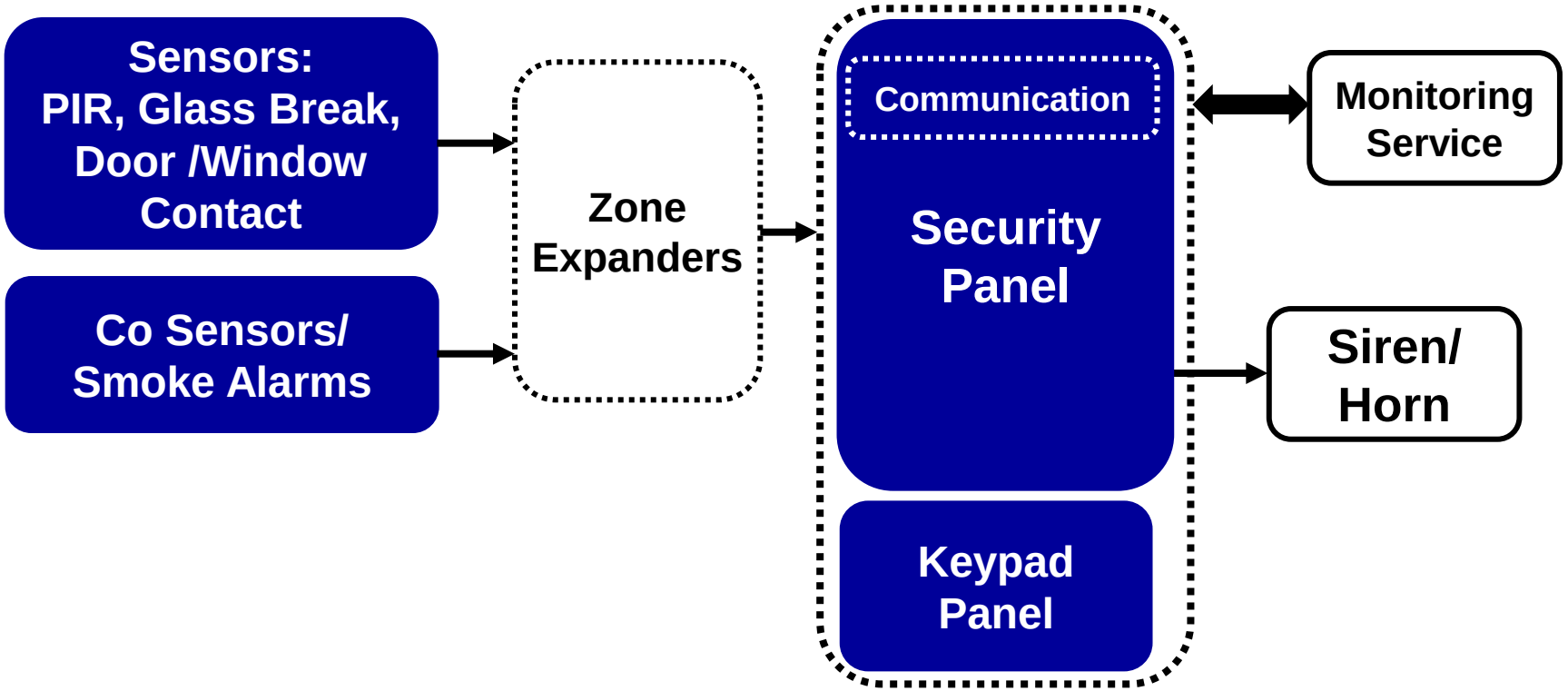

<< BACK to CONTENTS

Security Panel Block Diagram

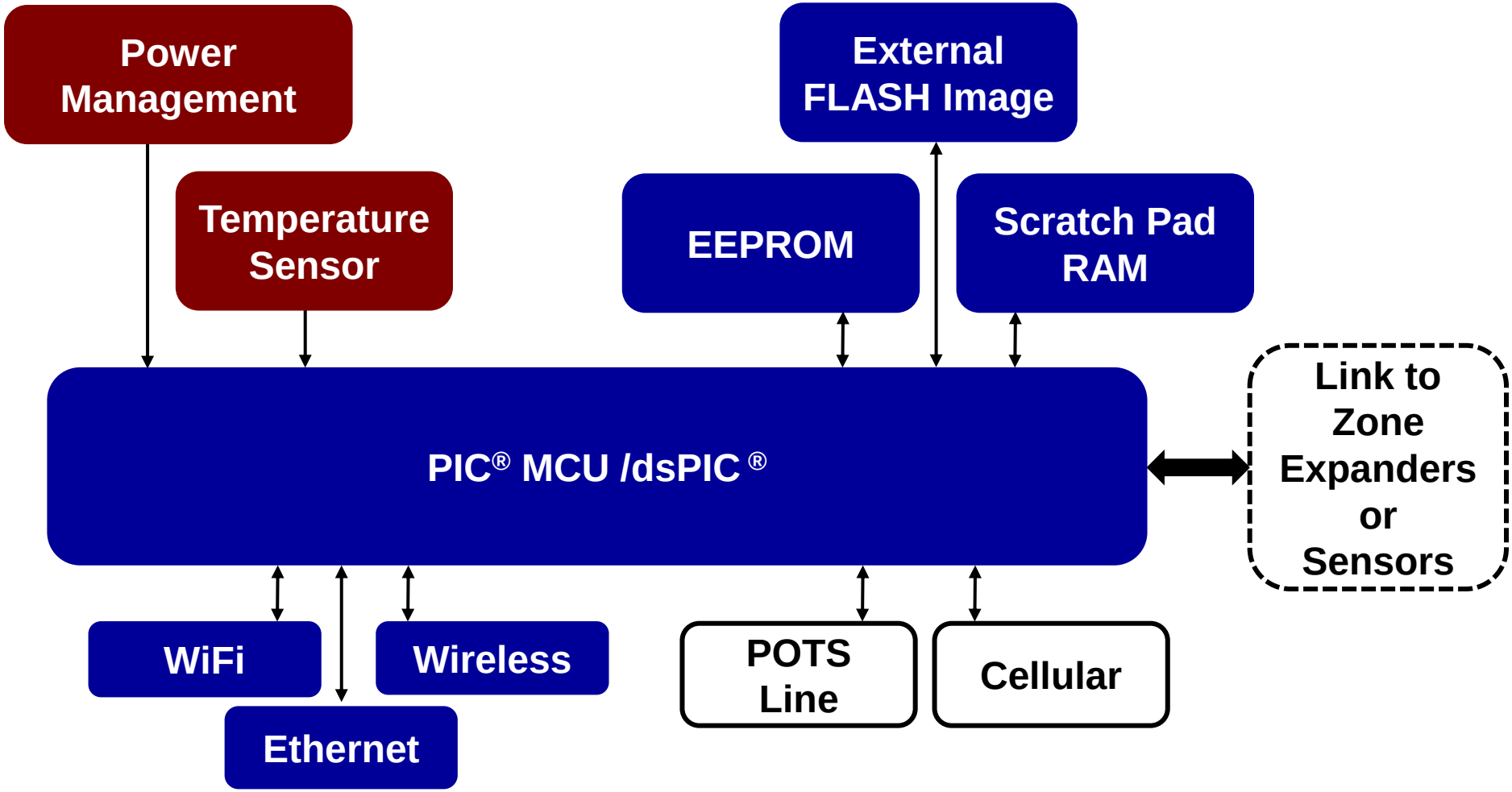

<< BACK to CONTENTS
<< BACK to Home Alarm System BLOCK DIAGRAM

Keypad Panel Block Diagram

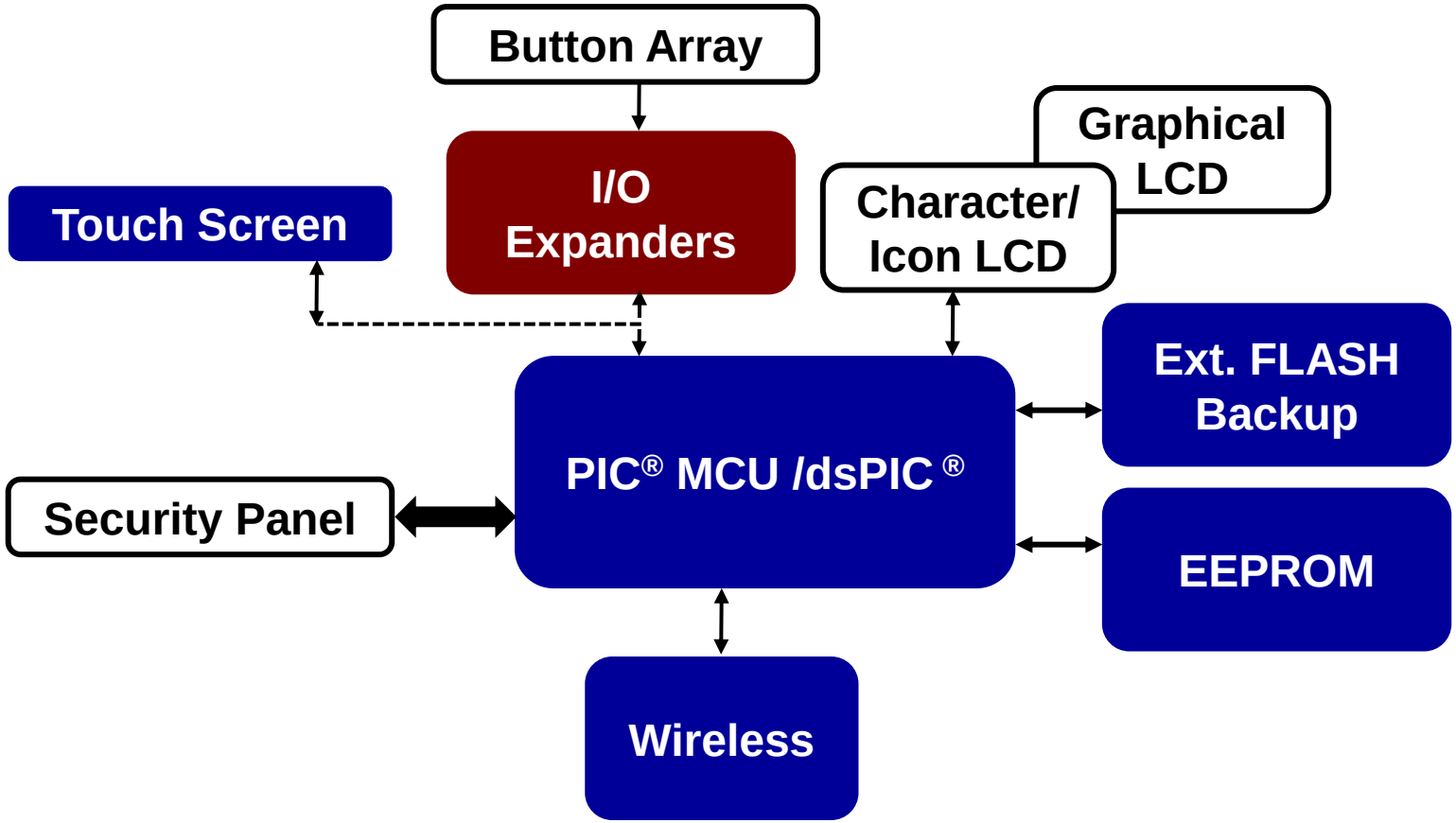

<< BACK to CONTENTS
<< BACK to Home Alarm System BLOCK DIAGRAM

Sensor Block Diagram

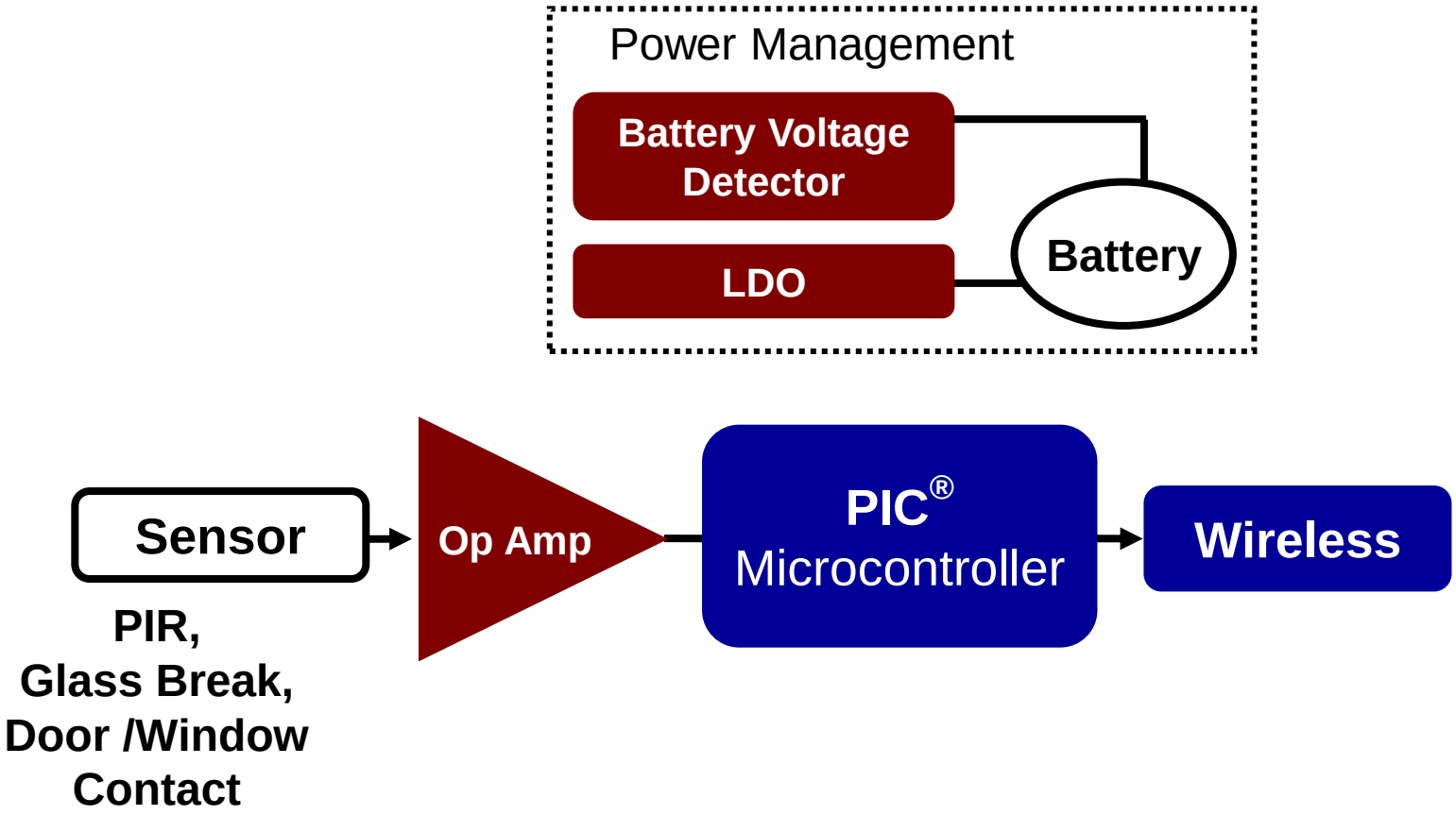

<< BACK to CONTENTS
<< BACK to Home Alarm System BLOCK DIAGRAM

16/32-Bit Microcontroller

Suggested Products	Description	Product Web Page
PIC32M	MIPS M4K Core • Up to 80 MHz, 1.65 DMIPS/MHz • 5 Stage Pipeline devices • Temperature Range: -40C to 105C • AEC-Q100 qualified Date and Code • Up to 512 KB Flash • Up to 128 KB SRAM • Separate Buses for Instructions and Data Connected Peripherals with DMA • Full-speed USB Host/Device/OTG • 10/100 Ethernet MAC with MII/RMII Interfaces • 2x CAN 2.0B Ports • Up to 6 UART, 5 I²C™, 4 SPI Ports, CTMU and I²S • Up to 8 Additional Channels of General Purpose DMA	Click Here
PIC24F	The PIC24F microcontroller family features cost effective, 16 MIPS 16-bit MCU performance and many devices with Microchip's eXtreme Low Power Technology	Click Here

<< BACK to Keypad Panel Blk Diagram
<< BACK to Security Panel Blk Diagram

8-Bit Microcontroller

Suggested Products	Description			Product Web Page
	Flexible Intelligence	Innovative Integration	eXtreme Low Power	
PIC12/16/18	▪ Continuous re-investment in 8-bit portfolio ▪ Industry's most robust offering ▪ Pin and code compatible across families ▪ 6 pin DFN to 100 pin TQFP ▪ 375B to 128KB Flash ▪ 16B to 4KB RAM ▪ Onboard EEPROM ▪ 1.8V to 5.5V+ Operation	▪ Core Independent Peripherals ▪ Complementary Output Generator ▪ Configurable Logic Cell ▪ Numerically Controlled Oscillator ▪ Rail to Rail Op-Amps, Fast Comparators ▪ Programmable Switch Mode Controller ▪ High Resolution PWM, ADC, DAC ▪ I2C, SPI, UART, USB, Ethernet	▪ Lowest power sleep modes with flexible wake-up sources ▪ Active currents down to 35 uA/MHz ▪ Sleep current as low as 20nA ▪ Battery lifetime ≥ 20 years ▪ Operation down to 1.8V ▪ Single cell operation ▪ Special low power BOR, WDT, RTC	Click Here

<< BACK to BLOCK DIAGRAM

Temperature Sensors

- **Function: Measuring and providing Temperature information**

Popular Products	Description	Product Web Page
MCP9808 Digital temperature sensor	The MCP9808 converts temperatures between -20°C and +100°C to a digital word with ±0.5°C (max.) accuracy	Click Here
MCP9700 Linear Active Thermistor™ ICs	The output voltage of this device is directly proportional to measured temperature. The MCP9700 can accurately measure temperature from -40C to +150C with the output calibrated to a slope of 10mV/°C and has a DC offset of 500mV.	Click Here

<< BACK to BLOCK DIAGRAM

Operational Amplifiers

Popular Products	Description	Product Web Page
MCP603x	The MCP6031/2/3/4 op amps have a gain bandwidth of 10 kHz with a low typical operating current of 0.9 µA and an offset voltage that is less than 150 µV.	Click Here
MCP6444	The MCP6444 is a quad general purpose op amp offering rail-to-rail input and output over the 1.8 to 6V operating range. This amplifier has a typical GBWP of 9 kHz with typ. quiescent current of 450 nA .	Click Here
MCP60x	MCP601/2/3/4 (op amp) has a gain bandwidth product of 2.8 MHz with low typical operating current of 230 µA and an offset voltage that is less than 2 mV.	Click Here
MCP6Vxx Family of Zero-Drift Amplifiers	The MCP6Vxx provides high DC precision, including an offset voltage as low as 2µV and offset drift as low as 15nV/°C maximum. They have low quiescent current, no 1/f noise and offer superior CMRR/PSRR performance. The family has an operating voltage as low as 1.6V and are available in small packages (SC-70 and DFN)	Zero-Drift Amplifiers Parametric Table
MCP6Nxx Family of Instrumentation Amplifiers	Microchip expanded its portfolio of amplifiers by first introducing the MCP6N11 the industry's first instrumentation amplifier featuring mCal technology and most recently introducing the MCP6N16 Zero-Drift instrumentation amplifier. • Rail-to-Rail Input and Output • Gain Set by two (2) External Resistors • Enable/Vos Calibration Pin (MCP6N11) • Zero-Drift Architecture (MCP6N16) • Operating Voltage Range: 1.8V to 5.5V	Instrumentation Amplifiers Parametric Table

<< BACK to BLOCK DIAGRAM

I/O Expanders

- **Function: Provide general purpose parallel I/O expansion for I²C™ or SPI applications**

Popular Products	Description	Product Web Page
MCP23018/S18	MCP23018/S18 is a 16-bit I/O expander for high speed I²C™Compatible interface. MCP23018 is available in the following packages: 28-pin PDIP (300 mil,)28-pin SOIC (300 mil), 24-pin SSOP, 24-pin QFN (4x4	Click Here

<< BACK to BLOCK DIAGRAM

Power Management

Popular Products	Description	Product Web Page
MCP13xx	The MCP13xx are voltage supervisor devices designed to keep a microcontroller in reset until the system voltage has reached and stabilized at a proper level for reliable system operation.	Click Here
MCP111/2	The MCP111/112 voltage detectors have extremely low 1uA operating current and small form factor. They hold the microcontroller in reset until the supply voltage reaches a predetermined operating level. These devices also protect against brownout conditions	Click Here
MCP1711	The MCP1711 is a 150mA LDO that has ultra low Iq of 0.6uA typ. The MCP1711 is packaged in 1x1mm DFN package with capless capability to minimize the PCB space for battery operated applications	Click Here
MCP16301/H	The MCP16301 is a highly integrated, high-efficiency, fixed frequency, step-down DC-DC converter in a popular SOT-23 package that operates from input voltage sources up to 36V	Click Here

<< BACK to Sensors Blk Diagram
<< BACK to Keypad Panel Blk Diagram
<< BACK to Security Panel Blk Diagram

Touch and Input Sensing Solutions

Popular Products	Description	Product Web Page
AR10xx	The Microchip mTouch™ AR1000 Series Resistive Touch Screen Controller is a complete, easy to integrate, cost-effective and universal touch screen controller chip solution. The AR1000 Series has sophisticated proprietary touch screen decoding algorithms to fully process all touch data and save the host from this overhead. More than the usual "preprocessing" features of other low cost devices, the AR1000 delivers reliable, validated and calibrated touch	Click Here
MTCH6301	The MTCH6301 is a turnkey projected capacitive touch controller that allows easy integration of multi-touch and gestures to create a rich user interface in your design.	Click Here

<< BACK to BLOCK DIAGRAM

Memory

Function Block	Popular Products	Description	Product Web Page
External Flash Image	SST39V	The SST39 Series MPF™ (Multi-Purpose Flash) products, including MPF+ and Advanced MPF+, provide fast read and program times with features such as Erase-Suspend/Erase-Resume, Boot Block, Security ID, Hardware Reset and heightened protection features.	Click Here
	SST25	The SST25xx family of Serial FLASH is among the industry's lowest power 3.0V and 1.8V products.	Click Here
EEPROM	24LC 25LC	Microchip offers the broadest range of Serial EEPROM devices (from 128 bits to 1 Mbit) over the widest operating voltage range (1.7 to 5.5V). Microchip Serial EEPROMs are compatible with the I²C®, SPI, Microwire, as well as the new single-I/O UNI/O® bus.	Click Here
Scratch Pad RAM	23LC		

<< BACK to Sensors Blk Diagram
<< BACK to Keypad Panel Blk Diagram
<< BACK to Security Panel Blk Diagram

Industry-Leading Wireless Portfolio

Technology	Protocol	Network Stack	Frequency
Wi-Fi®	IEEE 802.11	TCP/IP	2.4/5 GHz
Bluetooth®	IEEE 802.15.1	BT v2.1, BT Audio, BTLE v4.1	2.4 GHz
Wireless One Way	Proprietary	MiWi™ + KEELOQ® Technology	Sub-1 GHz
Wireless Two Way	Proprietary or IEEE 802.15.4	MiWi, BT, ZigBee®, RF4CE, LoRa® Technology	Sub-1 GHz and 2.4 GHz

Visit the Wireless Connectivity Design Center

The LoRa name and associated logo are registered trademarks of Semtech Corporation or its subsidiaries.

<< BACK to Sensors Blk Diagram
<< BACK to Keypad Panel Blk Diagram
<< BACK to Security Panel Blk Diagram

Fitness Equipment

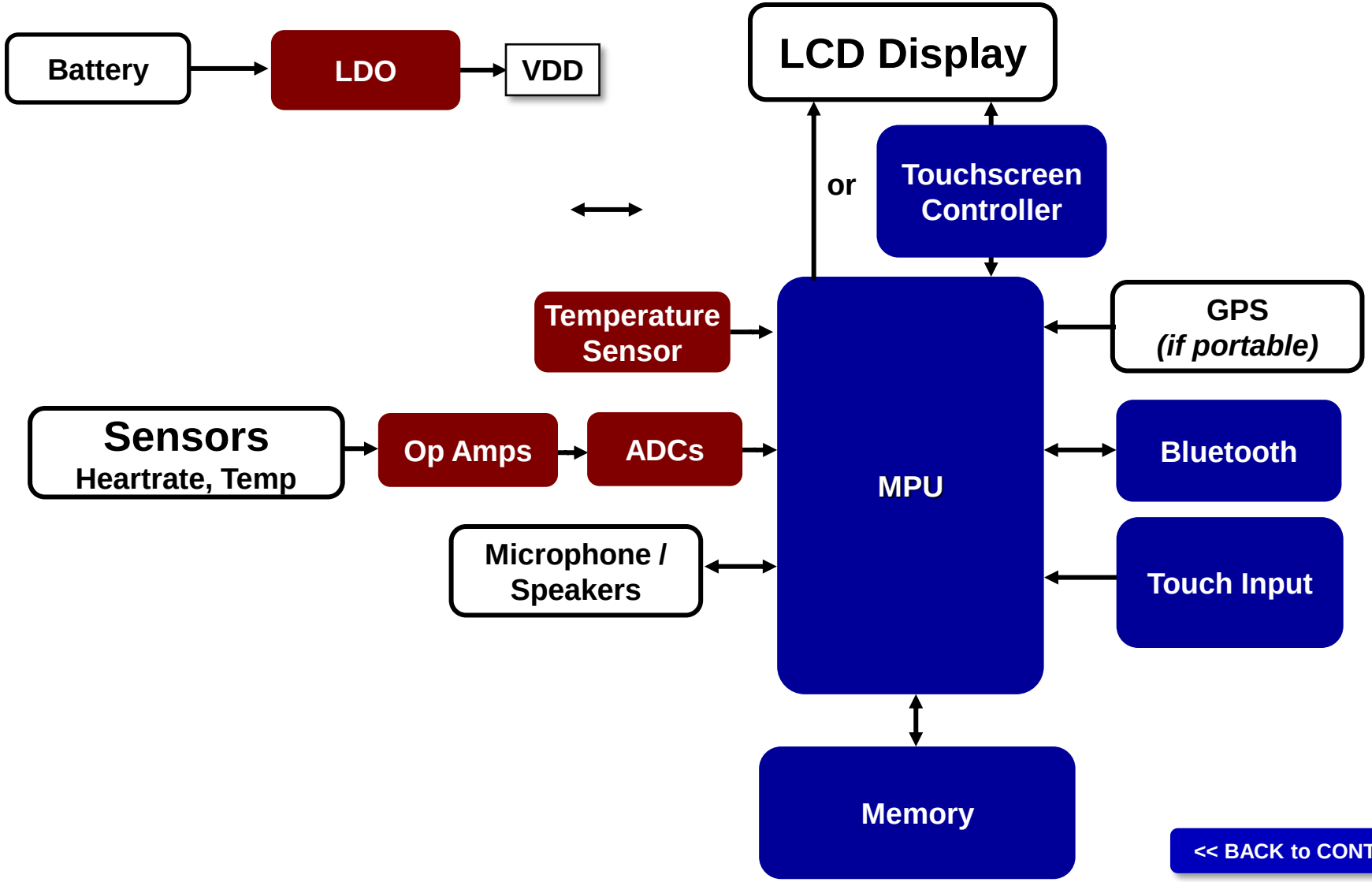

<< BACK to CONTENTS

MPU

- **Function: System control and decision making**

Popular Products	Description	Product Web Page
SAMA5D	Operating at 850DMIPS at under 150mW, the Atmel SMART SAMA5D3 MPU is ideal for any high-performance, low-power and cost-sensitive industrial application.	Click Here

<< BACK to BLOCK DIAGRAM

Bluetooth

- **Function: Low power wireless connectivity to user's smart phone**

Popular Products	Description	Product Web Page
ATSAMB11	The ATSAMB11 is an ultra-low power Bluetooth® SMART (BLE 4.1) System on a Chip with Integrated MCU, Transceiver, Modem, MAC, PA, TR Switch, and Power Management Unit (PMU). It is a standalone ARM® Cortex®-M0 applications processor with embedded Flash memory and BLE connectivity.	Click Here

<< BACK to BLOCK DIAGRAM

LDO

- **Function: Provides regulated, low-noise supply voltages for the system**

Popular Products	Description	Product Web Page
MIC5353	The MIC5353 is a 500 mA, ceramic output cap stable, low output voltage, Low Dropout Regulator. The MIC5353 is packaged in very small 1.6x1.6mm DFN package. This part has high PSRR of 60dB with low output noise of 30 uVrms for noise sensitive applications	Click Here
MCP1703A	With 250 mA maximum output, MCP1703 works with input voltage of up to 16V and in combination with its low current consumption of 2 µA	Click Here

<< BACK to BLOCK DIAGRAM

Digital Temperature Sensor

- **Function: Temperature measurement with digital output (body, system, etc)**

Popular Products	Description	Product Web Page
MCP9808	The MCP9808 converts temperatures between -20°C and +100°C to a digital word with ±0.5°C (max.) accuracy	Click Here

<< BACK to BLOCK DIAGRAM

Analog-to-Digital Converter

- **Function: Convert analog signals from sensors to digital code**

Popular Products	Description	Product Web Page
MCP3421	The MCP3421 is a single channel low-noise, high accuracy Delta-Sigma A/D converter with differential inputs and up to 18 bits of resolution in a small SOT-23-6 package. The device uses a two-wire I2C™ compatible serial interface and operates from a single power supply ranging from 2.7V to 5.5V.	Click Here
MCP3551	MCP355X devices are 2.7V to 5.5V, 22-bit delta-sigma A/D converters. The family exhibit good linearity, high accuracy and low noise performance for applications where sensor measurements such as pressure are performed.	Click Here

<< BACK to BLOCK DIAGRAM

Operational Amplifiers

Popular Products	Description	Product Web Page
MCP603x	The MCP6031/2/3/4 op amps have a gain bandwidth of 10 kHz with a low typical operating current of 0.9 µA and an offset voltage that is less than 150 µV.	Click Here
MCP6444	The MCP6444 is a quad general purpose op amp offering rail-to-rail input and output over the 1.8 to 6V operating range. This amplifier has a typical GBWP of 9 kHz with typ. quiescent current of 450 nA .	Click Here
MCP60x	MCP601/2/3/4 (op amp) has a gain bandwidth product of 2.8 MHz with low typical operating current of 230 µA and an offset voltage that is less than 2 mV.	Click Here
MCP6Vxx Family of Zero-Drift Amplifiers	The MCP6Vxx provides high DC precision, including an offset voltage as low as 2µV and offset drift as low as 15nV/°C maximum. They have low quiescent current, no 1/f noise and offer superior CMRR/PSRR performance. The family has an operating voltage as low as 1.6V and are available in small packages (SC-70 and DFN)	Click Here
MCP6Nxx Family of Instrumentation Amplifiers	Microchip expanded its portfolio of amplifiers by first introducing the MCP6N11 the industry's first instrumentation amplifier featuring mCal technology and most recently introducing the MCP6N16 Zero-Drift instrumentation amplifier. • Rail-to-Rail Input and Output • Gain Set by two (2) External Resistors • Enable/Vos Calibration Pin (MCP6N11) • Zero-Drift Architecture (MCP6N16) • Operating Voltage Range: 1.8V to 5.5V	Click Here

<< BACK to BLOCK DIAGRAM

Memory

Popular Products	Description	Product Web Page
24AA256	The 24AA256 is a 256Kb (32K x 8) Serial Electrically Erasable PROM (EEPROM), capable of operation across a broad voltage range (1.7V to 5.5V) and functional up to 125C. This ultra-reliable EEPROM has been developed for advanced, low-power applications and offers the benefit of over 1M Erase/Write cycles.	Click Here
23K256	The 23K256 is a standalone Serial SRAM that offers designers an easy and inexpensive way to add more RAM to their application. These 8-pin low power, high performance SRAM devices have unlimited endurance and zero write times, making them ideal for applications involving continuous data transfer, buffering, data logging, audio, video, internet, graphics, and other math and data-intensive functions.	Click Here
SST26VF032B	The SST26VF032B Serial Quad I/O (SQI) flash device utilizes a 4-bit multiplexed I/O serial interface to boost performance while maintaining the compact form factor of standard serial flash devices. Operating at frequencies reaching 104 MHz, the SST26VF032B enables minimum latency execute-in-place (XIP) capability without the need for code shadowing on an SRAM.	Click Here

<< BACK to BLOCK DIAGRAM

Capacitive Touch Solutions

- **Function: Adds touch input functionality**

Popular Products	Description	Product Web Page
maxTouch® Touchscreen Controllers	The maXTouch touch controller family provides a leading projected capacitive technology for touchscreens and touch pads. It supports single-finger, multi-fingers and gloved-finger operation. Regardless of the operating environment—hot or cold, dry or wet, noisy power supply or strong radiating surrounding devices—maXTouch controllers are designed for robust and reliable operation without compromising touch performance.	Click Here
1D Touch	Touch turnkey products for buttons, sliders, wheels and proximity.	Click Here

<< BACK to BLOCK DIAGRAM

Power Tools

<< BACK to CONTENTS
NEXT

Professional Power Tools

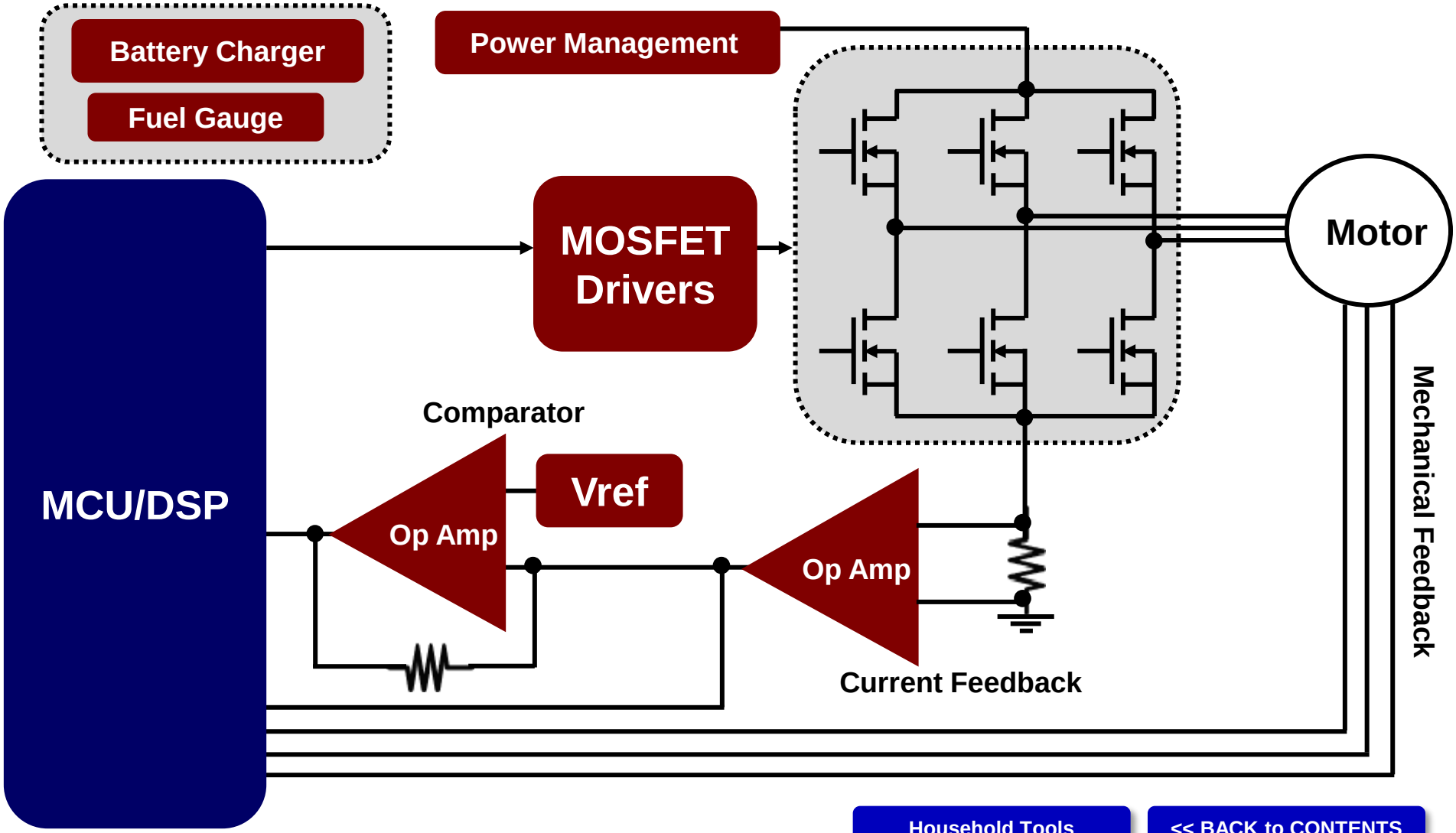

Household Tools
<< BACK to CONTENTS

Household Power Tools

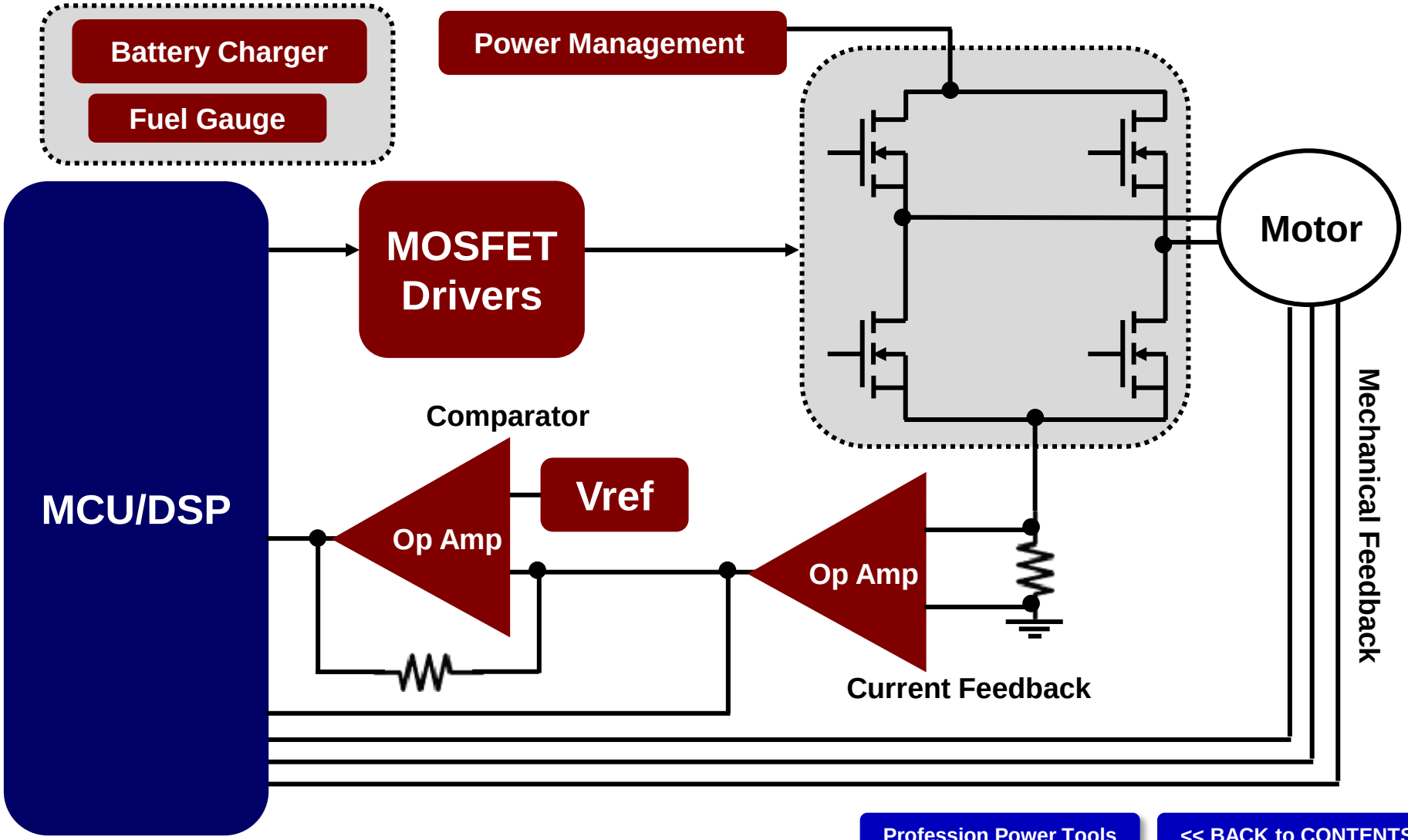

Profession Power Tools
<< BACK to CONTENTS

Battery Charger

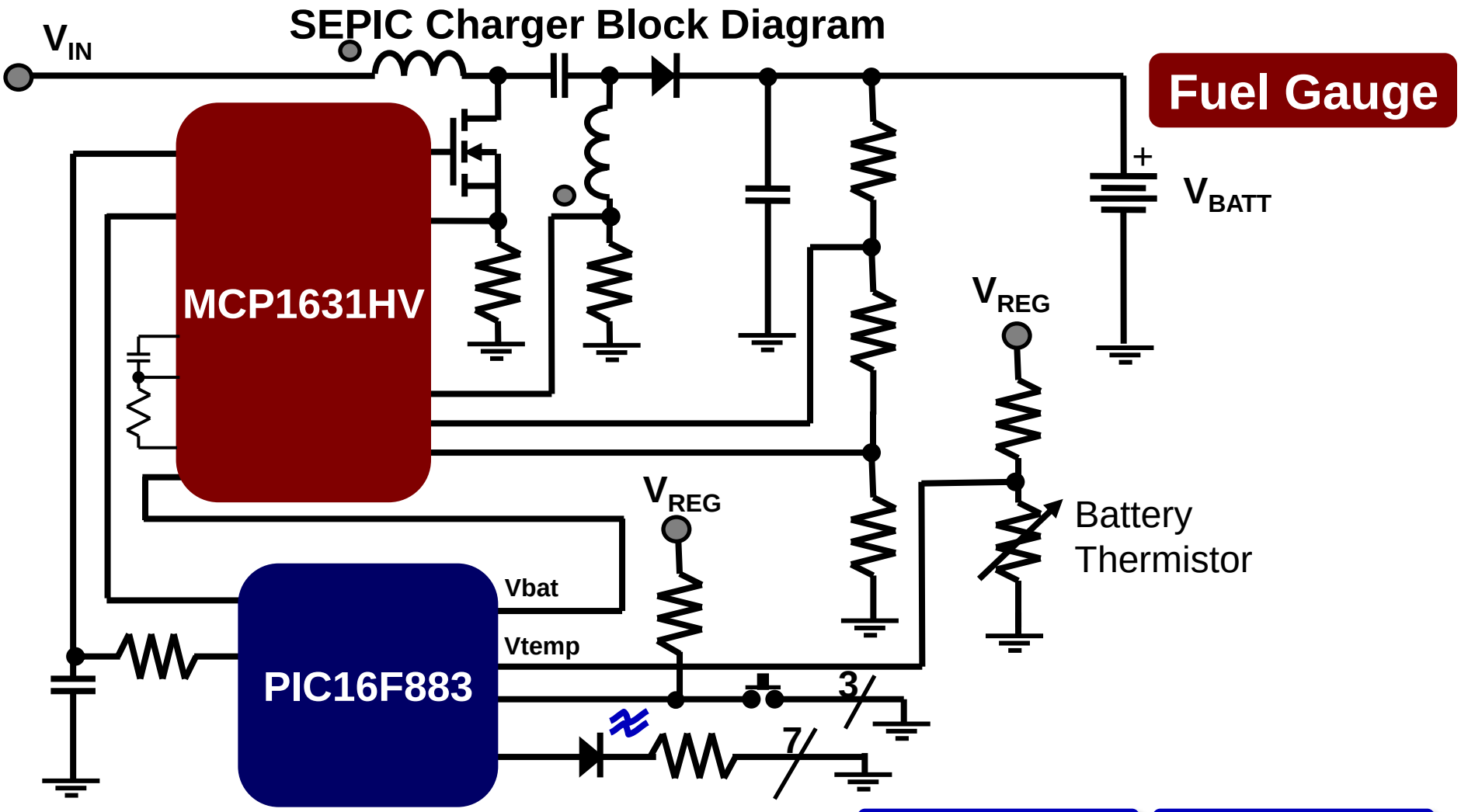

Profession Power Tools

Household Tools

PWM Controller

Suggested Products	Description	Product Web Page
MCP1630/1	• Small footprint discrete high-speed PWM controllers (2MHz) in conjunction with a MCU. • Peak Current Mode Control. • High Voltage Options Operate to +16V Input. • Integrated Overvoltage Comparator and Low Side MOSFET Driver. • Over-temperature Protection and Under-voltage Lockout (UVLO).	MCP1630 MCP1631
MCP1631RD-MCC2: MCP1631HV Multi-Chemistry Battery Charger Reference Design		Click Here
MCP1631RD-DCPC1: MCP1631HV Digitally Controlled Programmable Current Source Reference Design		Click Here

<< BACK

PIC Microcontrollers

- **Function: coordinating all the control and monitor functions - the brain of the system**
- **Popular products: PIC16F182X, 178X, 75X, 15XX, 193X**
- **Attributes:**
  - Upwards of 32MHz internal OSC
  - 4 channel Programmable Switch Mode Controller (PSMC)
  - Integrated high performance comparators, op-amp, 10/12 bit ADC, 5/8/9 bit DAC, CCP, COG, NCO, CLC
  - Slope compensation
  - 256 bytes of EEPROM
  - Available in various packages

Microcontroller

Suggested Products	Description	Product Web Page
PIC16F883	• This powerful yet easy-to-program (only 35 single word instructions) CMOS FLASH-based 8-bit microcontroller in a 28 pin package. • The PIC16F883 features 256 bytes of EEPROM data memory, 2 Comparators, 11 channels of 10-bit ADC, 1 capture/compare/PWM and 1 Enhanced capture/compare/PWM functions, a synchronous serial port that can be configured as either 3-wire Serial Peripheral Interface (SPI™) or the 2-wire Inter-Integrated Circuit (I²C™) bus and an Enhanced Universal Asynchronous Receiver Transmitter (EUSART).	PIC16F833

<< BACK

Fuel Gauge

- **Function: To track remaining battery level or charging status**

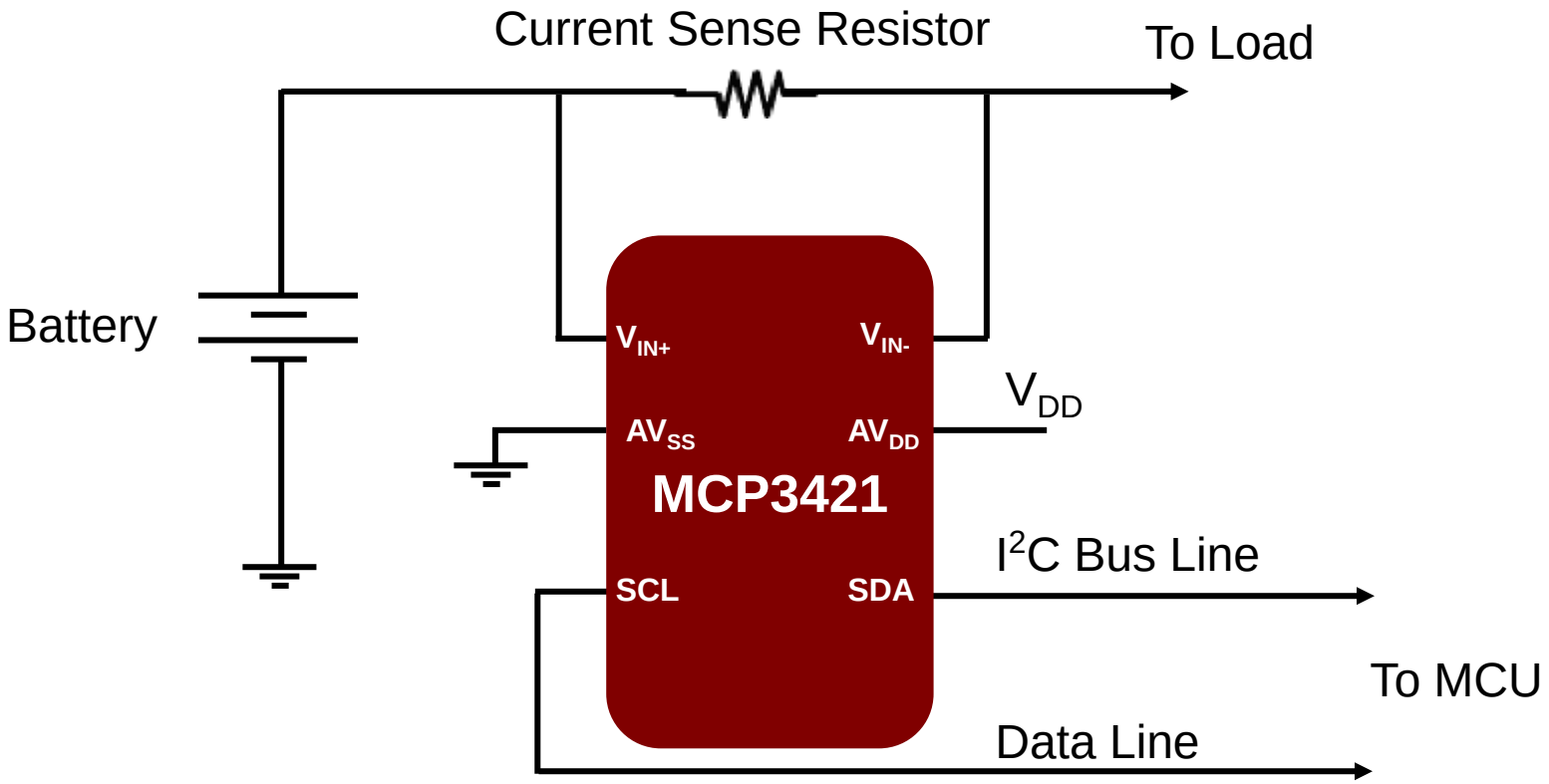

Profession Power Tools | Household Tools

Analog-to-Digital Convertor

- **Function: Converting analog voltage or current signal (pressure) into digital data**

Popular Products	Description	Product Web Page
MCP3421	The MCP3421 is a single channel low-noise, high accuracy Delta-Sigma A/D converter with differential inputs and up to 18 bits of resolution in a small SOT-23-6 package. The device uses a two-wire I2C™ compatible serial interface and operates from a single power supply ranging from 2.7V to 5.5V.	Click Here
AN1156: Application Note on Battery Fuel Measurement Using Delta-Sigma ADC Devices		Click Here
MCP3421DM-BFG: Battery Fuel Gauge Demo Board		Click Here

Linear Products

Function	Popular Products	Description	Product Web Page
Sense and gain up output current. Low offset voltage required for minimizing measurement error	MCP62x	The MCP62x mCAL op amps have a gain bandwidth of 20 MHz with a low typical operating current of 2.5 mA and an offset voltage that is less than 200 µV. They feature on-chip Input offset voltage calibration	Click Here
Provide feedback compensation by sensing O/P voltage and comparing it with ref. voltage	MCP60x	MCP601/2/3/4 (op amp) has a gain bandwidth product of 2.8 MHz with low typical operating current of 230 µA and an offset voltage that is less than 2 mV.	Click Here
Compares voltage output of the amplifier to a reference to determine over current condition	MCP65xx	These comparators are optimized for low power, single-supply operation with greater than rail-to-rail input operation. Available in push-pull and Open drain outputs, the MCP656x family supports rail-to-rail output swing. The output limits supply current surges, and dynamic power consumption while switching.	Click Here

85V MOSFET Drivers

- **Function: driving the high power devices**

Popular Products	Description	Product Web Page
MIC4605 85V Half-Bridge MOSFET Driver With Adaptive Dead Time (ADT)	The MIC4605 is an 85V half-bridge MOSFET driver that features adaptive-dead-time and shoot-through protection. The adaptive-dead-time circuitry actively monitors the half-bridge outputs to minimize the time between high-side and low-side MOSFET transitions, thus maximizing power efficiency.	Click Here
MIC4607 85V 3-Phase MOSFET Driver With Adaptive Dead Time (ADT)	The MIC4607 is an 85V, three-phase MOSFET driver. The MIC4607 features a fast (35ns) propagation delay time and 20ns driver rise/fall times for a 1nF capacitive load. TTL inputs can be separate high- and low-side signals or a single PWM input with high and low drive generated internally. High- and low-side outputs are guaranteed to not overlap in either mode. The MIC4607 includes overcurrent protection as well as a high-voltage internal diode that charges the high-side gate drive bootstrap capacitor.	Click Here

Power Management

Popular Products	Description	Product Web Page
MCP16311/2	The MCP16311/2 is a compact, high-efficiency, fixed frequency PWM/PFM, synchronous step-down DC-DC converter that operates from input voltage sources up to 30V. Integrated features include a high-side and a low-side switch, fixed frequency Peak Current Mode Control, internal compensation, peak-current limit and over temp. protection.	Click Here
MIC24046	The MIC24046 is a pin-programmable, high-efficiency, wide input range, 5A synchronous step-down regulator. The MIC24046 is perfectly suited for multiple-voltage rail application environments typically found in computing and telecommunication systems. It can be programmed by pin strapping various parameters, such as output voltage, switching frequency, and current-limit values. The pin-selectable switching frequency, valley-current mode control technique, high-performance error amplifier, and external compensation allow for the best trade-offs between high efficiency and the smallest possible solution size.	Click Here

Voltage Reference

- **Function: providing the system with an accurate analog voltage for comparison**

Popular Products	Description	Product Web Page
MCP1525/41	MCP1525/41 is a low power, high precision voltage reference. It provides a precise output voltage of 4.096V which is then compared to other voltages in the system.	Click Here
MCP1501	The MCP1501 is a high-precision buffered voltage reference with an initial accuracy of 0.10% and is available in 8 voltage options. The MCP1501 is a low-drift bandgap-based reference and uses chopper-based amplifiers which significantly reduces the drift and provides high current output.	Click Here

USB Breakout Box

<< BACK to CONTENTS
NEXT

USB Breakout Box

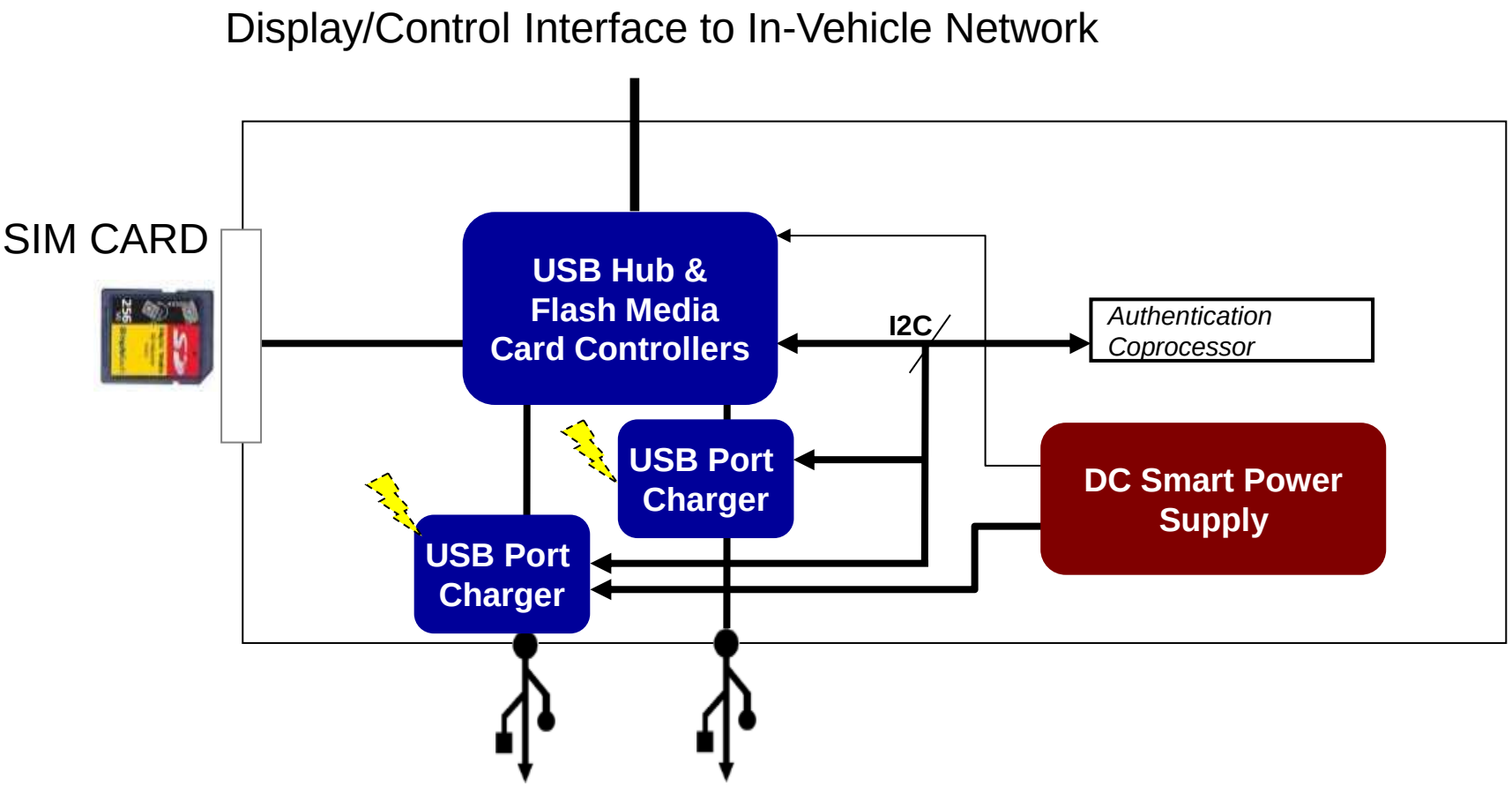

<< BACK to CONTENTS

USB Hub & Flash Media Card Controllers

Popular Products	Description	Product Web Page
USB5744	4 port Smart hub, SuperSpeed (SS)/Hi-Speed (HS), low power, low pin count configurable and fully compliant with the USB 3.1 Gen 1 specification. The USB5744 also supports Full Speed (FS) and Low Speed (LS) USB signaling, offering complete coverage of all defined USB operating speeds	Click Here
USB84602	USB 2.0 hub controller with 2 downstream ports and advanced features for embedded USB applications. FlexConnect technology allows for easy port reversals or “role swapping.”	Click Here
USB224x	USB 2.0 Flash Media Card Controller with Integrated Card Power FETs	Click Here
USB264x	USB 2.0 Flash Media Controller with Integrated Card Power FETs and HS Hub	Click Here

<< BACK to BLOCK DIAGRAM

USB Port Charger

Suggested Products	Description	Product Web Page
UCS81003	The UCS81003 is a USB port power controller with charging emulation. It highlights nine pre-loaded charger emulation profiles and is compatible with BC1.2 CDP, DCP, YD/T-1591 as well as most Apple® and RIM® portable devices, e-books and tablets. Capable of up to 2.7A of continuous current and integrates a USB 2.0 compatible switch. I2C/SMBus communication allowing customer charge emulation profiles. The '8' USC81003 represents automotive part ordering number. Standard part is USC1003.	UCS81003
UCS2112	The UCS2112 is a dual USB port power switch configuration which can provide 3.0A continuous current (3.4A maximum) per V_{BUS} port with precision overcurrent limiting (OCL), port power switch enables, auto-recovery fault handling, undervoltage and overvoltage lockout, back-drive protection and back-voltage protection, and dynamic thermal management	UCS2112

<< BACK to BLOCK DIAGRAM

DC Smart Power Supply

Suggested Products	Description	Product Web Page
MCP19119	The MCP19111 is a mid-voltage (4.5-40V) analog-based PWM controller family with an integrated 8-bit PIC(R) Microcontroller. This unique product combines the performance of a high-speed analog solution, including high-efficiency and fast transient response, with the configurability and communication interface of a digital solution. Combining these solution types creates a new family of devices that maximizes the strengths of each technology to create a more cost-effective, configurable, high-performance power conversion solution.	MCP19119

<< BACK to BLOCK DIAGRAM

High End Beverage Machine

<< BACK to CONTENTS
NEXT

High End Beverage Machine

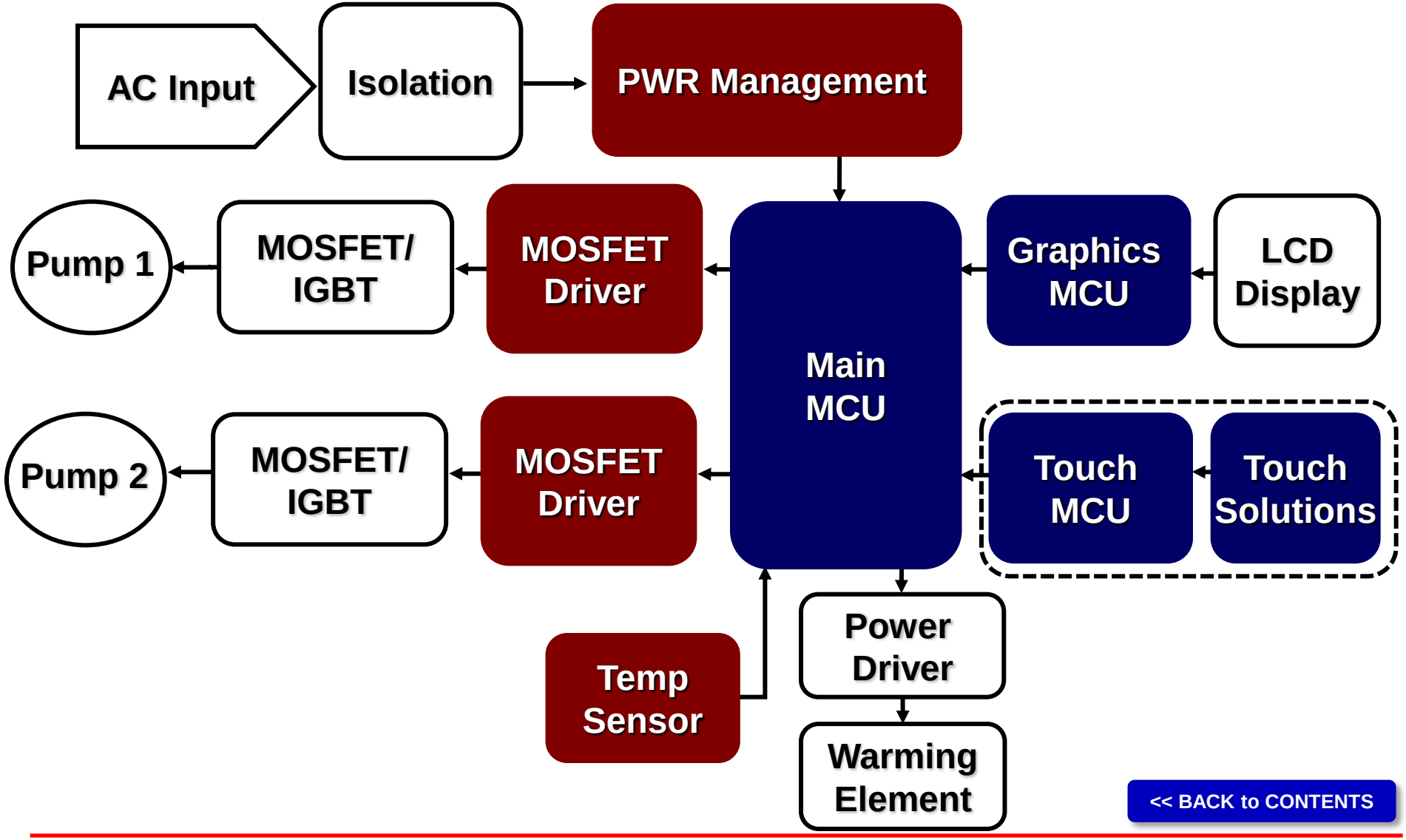

<< BACK to CONTENTS

Temperature Sensors

- **Function: Measuring and providing Temperature information**

Popular Products	Description	Product Web Page

MCP9800
Digital temperature sensor
	• 2-wire I²C™/SMBus Compatible Interface
	• User Selectable 9- to 12-Bit Resolution
	  • ±1°C Accuracy from -10°C to +85°C
	  • ±2°C Accuracy from +85°C to +125°C
	• Low Operating Current: 220 µA (typical)
	• Shutdown Mode: 1 µA (max)
		Click Here

MCP9700 Linear Active Thermistor™ ICs	The output voltage of this device is directly proportional to measured temperature. The MCP9700 can accurately measure temperature from -40C to +150C with the output calibrated to a slope of 10mV/°C and has a DC offset of 500mV.	Click Here

Winning Attributes

<< BACK to BLOCK DIAGRAM

Temperature Sensors Winning Attributes

- **Attributes:**
  - Small SC70, SOT-23 and DFN leadless packages
  - Very low operating current: 35 to 250µA (typ)
  - Very low shutdown current: 1µA (max)
  - High temp accuracy: ±0.25°C
  - Simple operation: no need for external components
  - Analog and digital (SPI™, I2C™, SMBus™) devices
  - High temperature resolution

BACK

Low-Power LDOs

- **Function: providing regulated, low-noise supply voltages for the system**

Popular Products	Description	Product Web Page
MCP1700	The MCP1700 can source up to 250mA of current with an extremely low input-output voltage differential of 178mV at 250mA. with the low current consumption of only	Click Here
MCP1703A	With 250 mA maximum output, MCP1703 works with input voltage of up to 16V and in combination with its low current consumption of 2 µA	Click Here

Winning Attributes

<< BACK to BLOCK DIAGRAM

Low-Power LDOs Winning Attributes

- **Attributes:**
  - Extremely low operating current: as low as 1µA
  - High output voltage accuracy
  - Stability with ceramic capacitors
  - Wide range of output voltage options
  - Space-saving SC70 and SOT-23 packages
  - Wide range of features: shutdown mode

BACK

RESET Monitors

- **Function:** System supervisor circuits designed to monitor VCC in digital systems and provide a reset signal to the host processor when needed

Popular Products	Description	Product Web Page
TCM809	The reset output is driven active within 20 µsec of VCC falling through the reset voltage threshold. Reset is maintained active for a minimum of 140msec after VCC rises above the reset threshold.	Click Here
MCP1xx	The MCP1xx are a family of voltage supervisory devices which also operates as protection from brown-out conditions when the supply voltage drops below a safe operating level	Click Here

Winning Attributes

<< BACK to BLOCK DIAGRAM

RESET Monitors Winning Attributes

- **Attributes:**
  - Tiny SOT-23 and SC-70 packages
  - Very low operating current: as low as 1µA (max)
  - High threshold voltage accuracy: ±2.8% (max)
  - V_{DD} transient immunity
  - Many available options: push-pull output, open-drain output and internal pull-up resistor

BACK

Synchronous Buck MOSFET Drivers

- **Function: driving the high power devices (MOSFETs in synch. Buck configuration**

Popular Products	Description	Product Web Page
MCP14628 Dual Output MOSFET Driver for Synchronous Applications	The MCP14628 is a synchronous MOSFET driver used for driving MOSFETs in a rectified bridge arrangement. There are two separate drivers contained in the MCP14628. The low-side driver output drives a non-floating or ground reference N-Channel MOSFET. The high-side driver is designed to drive a floating N-Channel MOSFET. An external bootstrap capacitor is used to provide the additional voltage.	Click Here
MCP14700 Synchronous MOSFET Driver w/separate High/Low side control	The MCP14700 is a high-speed synchronous MOSFET driver designed to optimally drive a high-side and low-side N-Channel MOSFET. The MCP14700 has two PWM inputs to allow independent control of the external N-Channel MOSFETs.	Click Here

<< BACK to BLOCK DIAGRAM

Synchronous Buck MOSFET Drivers

- **Attributes:**
  - Operating voltage range: 5V to 30V
  - Peak current capability: 2A source, 4A sink
  - Internal Bootstrap Blocking Device
  - Low Supply Current: 80 µA (typical)
  - Space Saving Packages: SOIC, DFN

BACK

Operational Amplifiers

- **Function: buffering and filtering sensor feedback**

Popular Products	Description	Product Web Page
MCP6004	The MCP6004 is a quad general purpose op amp offering rail-to-rail input and output over the 1.8 to 6V operating range. This amplifier has a typical GBWP of 1 MHz with typical quiescent current of 100 microamperes.	Click Here
MCP6H04	MCP6H04 has a wide supply voltage range of 3.5V to 16V and rail-to-rail output operation. This device has a gain bandwidth product of 1.2 MHz (typical), while only drawing 135 µA/amplifier (typical) of quiescent current.	Click Here
MCP6294	MCP6294 provide wide bandwidth of 10 MHz Gain Bandwidth Product. This family also operates from a single supply voltage as low as 2.4V to 6V, while drawing 1 mA (typical) quiescent current.	Click Here

Winning Attributes

<< BACK to BLOCK DIAGRAM

Operational Amplifiers

- **Attributes:**
  - Small SC-70, TDFN and SOT-23 packages
  - GBWP: 9 kHz to 60MHz
  - Excellent operating current-to-GBWP ratio
  - Mostly rail-to-rail inputs and outputs
  - Offset voltage: as low as 2µV (MCP6V0x)
  - Chip Select capability for power savings

BACK

Analog-to-Digital Converters

- **Function: converting analog feedback signals from motor to digital signals for MCU**

Popular Products	Description	Product Web Page
MCP3221	The MCP3221 is a 12-bit SAR A/D converter. Available in the SOT-23 package, the MCP3221 provides a low max. conversion current and standby current of 250 µA and 1 µA respectively. Communication to the MCP3221 is performed using a 2-wire I2C™ Compatible interface. The MCP3221 runs on a single supply voltage range of 2.7 V to 5.5 V.	Click Here
MCP3201	The MCP3201 12-bit Analog-to-Digital Converter (ADC) combines high performance and low power consumption in a small package, making it ideal for embedded control applications. The MCP3201 features SAR architecture and a SPI serial interface, allowing 12-bit ADC capability to be added to any PIC® microcontroller. The MCP3201 features 100k samples/second, 1 input channel, low power consumption (5nA typical standby, 400µA max. active).	Click Here

Winning Attributes

<< BACK to BLOCK DIAGRAM

Analog-to-Digital Converters

- **SAR ADC Attributes:**
  - Resolution: 8 to 13 bits
  - Max sampling rate: up to 200 ksps
  - Linearity: ±1LSB DNL, ±1LSB INL
  - Current consumption: 175 to 500µA (max.)
  - Single supply voltage: 2.7V to 5.5V
  - Small packages: SOT-23 and MSOP

BACK

Voltage References

- **Function: providing the system with an accurate analog voltage for comparison (needed for ADC)**

Popular Products	Description	Product Web Page
MCP1525/41	MCP1525/41 is a low power, high precision voltage reference. It provides a precise output voltage of 4.096V which is then compared to other voltages in the system.	Click Here
MCP1501	The MCP1501 is a high-precision buffered voltage reference with an initial accuracy of 0.10% and is available in 8 voltage options. The MCP1501 is a low-drift bandgap-based reference and uses chopper-based amplifiers which significantly reduces the drift and provides high current output.	Click Here

Winning Attributes

<< BACK to BLOCK DIAGRAM

Voltage References

- **Attributes:**
  - 1.2V (TC1070), 2.5V or 4.096V output
  - Initial accuracy: ±1% (max)
  - Temperature coefficient: 50ppm/°C (max)
  - Output current: ±2mA
  - Operating current: 100µA (max)
  - Industrial temperature range: -40°C to +85°C
  - SOT-23 and TO-92 packages

BACK

PIC Microcontrollers

Function	Popular Products	Description	Product Web Page
Main MCU (Including Touch & Color Graphics)	PIC32MX	Microchip's 32-bit portfolio with the MIPS microAptiv or M4K core offer high performance microcontrollers, and all the tools needed to develop your embedded projects. With MPLAB® Harmony software framework, low cost development tools, and pin/peripheral compatibility from 16-bit product lines, PIC32 MCUs shorten time to market and allow your designs to grow.	Click Here
Main MCU (Including Touch & Simple Graphics)	PIC16F193x	This versatile 40-pin MCU is also a member of Microchip's extreme low power microcontroller family featuring nanoWatt XLP technology. Debug and Programming support is available via PICkit™ 3, and MPLAB® ® ICD 3	Click Here

<< BACK to BLOCK DIAGRAM

Capacitive Touch Solutions

Function	Popular Products	Description	Product Web Page
Capacitive Touch Solutions	CAP11/12xx	SMSC's capacitive touch sensor products, featuring RightTouch® technology, set a new standard in simplifying development, improving noise immunity, and lowering BOM costs in PC, LCD monitors, white goods and consumer electronic designs. These devices have been carefully designed to filter for common noise sources such as backlight inverters, DC-DC switching regulators and wireless frequencies. They support a wide variety of interfaces such as I2C, SMBus, SMSC BC-Link™ and SPI and also provide world-class ESD protection of ±8kV HBM with no external ESD protection circuits required.	Click Here

<< Next: mTouch Solutions

mTouch and Input Sensing Solutions

Popular Products	Description	Product Web Page
AR10xx	The Microchip mTouch™ AR1000 Series Resistive Touch Screen Controller is a complete, easy to integrate, cost-effective and universal touch screen controller chip solution. The AR1000 Series has sophisticated proprietary touch screen decoding algorithms to fully process all touch data and save the host from this overhead. More than the usual "preprocessing" features of other low cost devices, the AR1000 delivers reliable, validated and calibrated touch	Click Here
MTCH6301	The MTCH6301 is a turnkey projected capacitive touch controller that allows easy integration of multi-touch and gestures to create a rich user interface in your design.	Click Here

<< BACK to BLOCK DIAGRAM

Robot Vacuum Cleaner

<< BACK to CONTENTS
NEXT

Robot Vacuum Cleaner

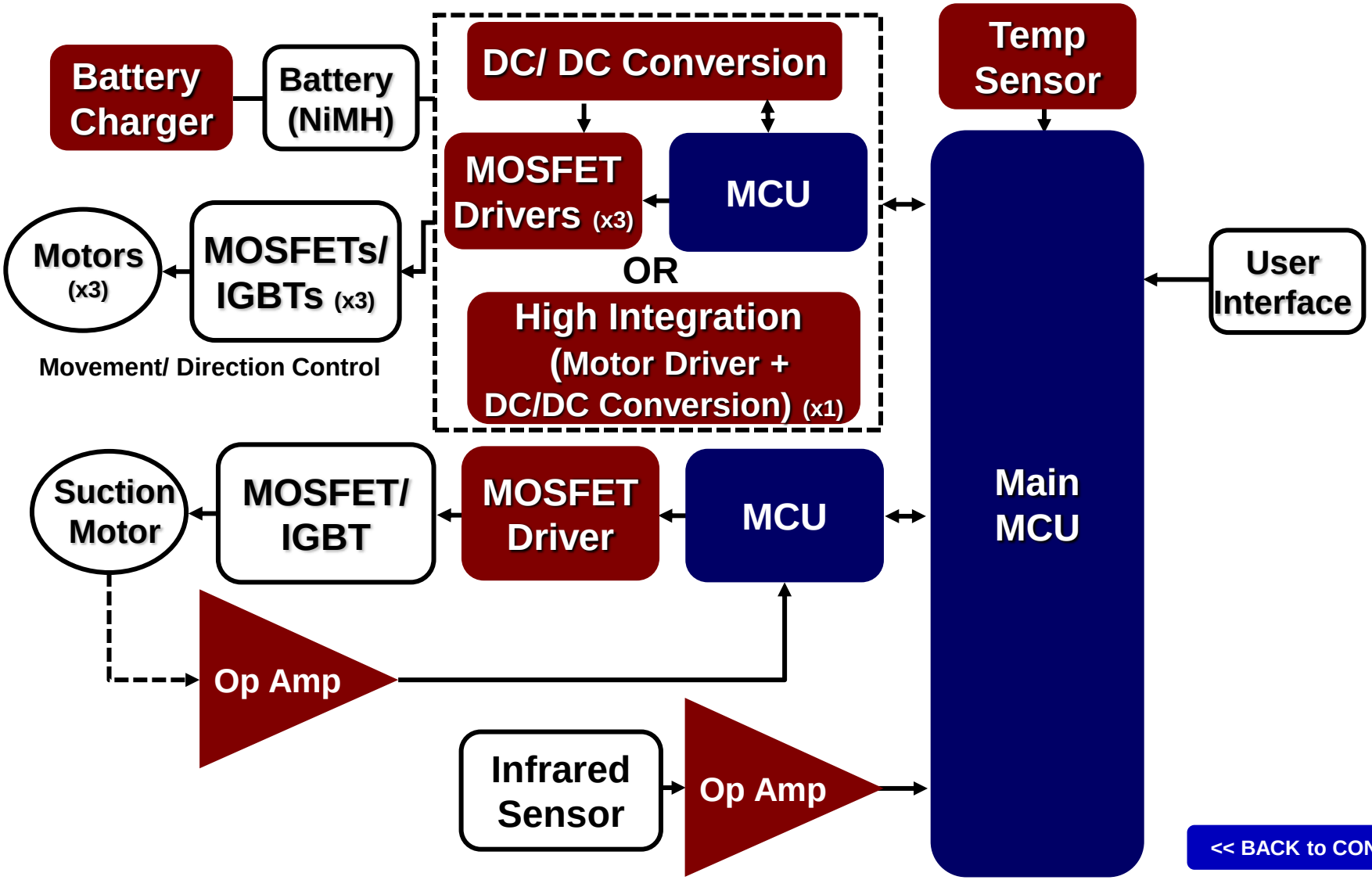

<< BACK to CONTENTS

High Integration Motor Control/ Drive

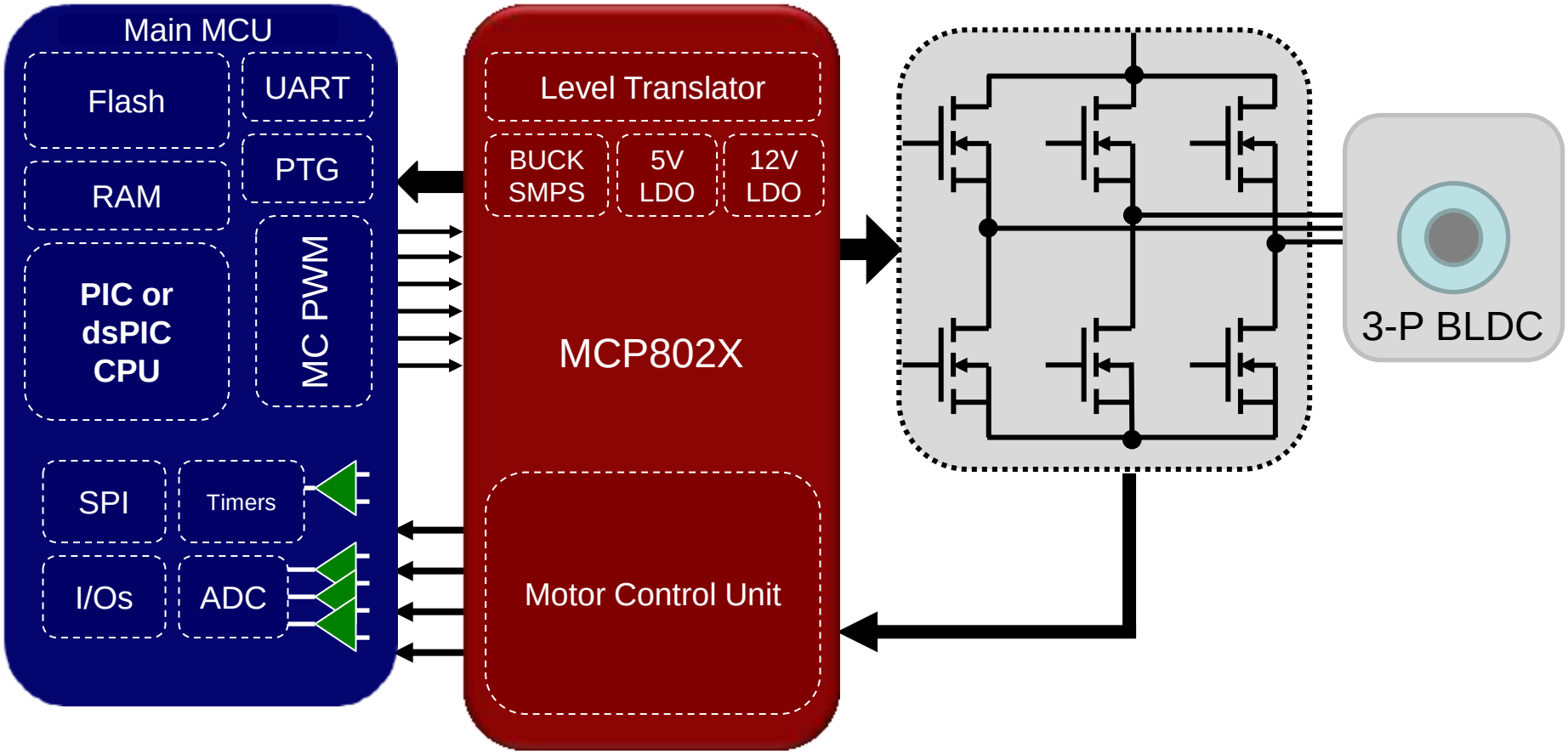

<< BACK to BLOCK DIAGRAM

Motor Control MOSFET Gate Driver

- **Function: power MCU/DSC, sense current, drive MOSFETs and provide housekeeping functions**

Popular Products	Description	Product Web Page
MCP8024/6	The three integrated op-amps allows MCP8024/6 provide motor current feedback to broad range of MCUs/DSCs in FOC applications. Both devices operates up to 28V and withstand 48V voltage spikes.	MCP8024 MCP8026
MCP8025	MCP8025 offers six N-Ch MOSFET drivers to drive MOSFETs efficiently. With zero-crossing output , a standalone op-amp and voltage regulators, it simplifies BLDC design and	Click Here

BACK

Low-Power LDOs

- **Function: providing regulated, low-noise supply voltages for the system**

Popular Products	Description	Product Web Page
MIC29302A	The MIC29302A is a high-current, low-cost, low-dropout voltage regulator which uses Micrel's proprietary Super βeta PNP® process with a PNP pass element. The 3A LDO regulator features 450mV (full load) dropout voltage and very low ground current.	Click Here
MCP1703A	With 250 mA maximum output, MCP1703 works with input voltage of up to 16V and in combination with its low current consumption of 2 µA	Click Here

<< BACK to BLOCK DIAGRAM

Operational Amplifiers for Sensor Signal Conditioning

Popular Products	Description	Product Web Page
MCP600x	The MCP600x is a quad general purpose op amp offering rail-to-rail input and output over the 1.8 to 6V operating range. This amplifier has a typical GBWP of 1 MHz with typical quiescent current of 100 microamperes/ amp.	Click Here
MCP64xx	MCP64xx family of Low Power Op Amps are designed with Microchip's advanced CMOS process. The MCP64xx Op Amps have low Quiescent Current, Input Offset Voltage and GBWP ranging from 9Khz to 7.5 MHz (typ.). Low power and small form factor make these devices ideal of many portable applications.	Click Here
MCP6294	MCP6294 provide wide bandwidth of 10 MHz Gain Bandwidth Product. This family also operates from a single supply voltage as low as 2.4V to 6V, while drawing 1 mA (typical) quiescent current.	Click Here

<< BACK to BLOCK DIAGRAM

Operational Amplifiers in the Control Loop

Popular Products	Description	Product Web Page
MCP63x	The MCP63x family of operational amplifiers features high gain bandwidth product (24 MHz)and high output short circuit current. Some devices also provide a Chip Select pin that supports a low power mode of operation. These amplifiers are optimized for high speed, low noise and distortion, single-supply operation with rail-to-rail output and an input that includes the negative rail.	Click Here
MCP66x	The MCP66x family of operational amplifiers features high gain bandwidth product, and high output short circuit current. High Gain Bandwidth of 60 MHz, Short Circuit Current of 90 mA, Noise: 6.8nV/rtHz, Rail-to-Rail Output, Slew Rate: 27 V/us	Click Here
MCP629x	MCP629x family provides wide bandwidth of 10 MHz Gain Bandwidth Product. This family also operates from a single supply voltage as low as 2.4V to 6V, while drawing 1 mA (typical) quiescent current.	Click Here

<< BACK to BLOCK DIAGRAM

MOSFET Drivers

Popular Products	Description	Product Web Page
MIC4605 85V Half-Bridge MOSFET Driver With Adaptive Dead Time (ADT)	The MIC4605 is an 85V half-bridge MOSFET driver that features adaptive-dead-time and shoot-through protection. The adaptive-dead-time circuitry actively monitors the half-bridge outputs to minimize the time between high-side and low-side MOSFET transitions, thus maximizing power efficiency.	Click Here
MIC4607 85V 3-Phase MOSFET Driver With Adaptive Dead Time (ADT)	The MIC4607 is an 85V, three-phase MOSFET driver. The MIC4607 features a fast (35ns) propagation delay time and 20ns driver rise/fall times for a 1nF capacitive load. TTL inputs can be separate high- and low-side signals or a single PWM input with high and low drive generated internally. High- and low-side outputs are guaranteed to not overlap in either mode. The MIC4607 includes overcurrent protection as well as a high-voltage internal diode that charges the high-side gate drive bootstrap capacitor.	Click Here

<< BACK to BLOCK DIAGRAM

Battery Charger

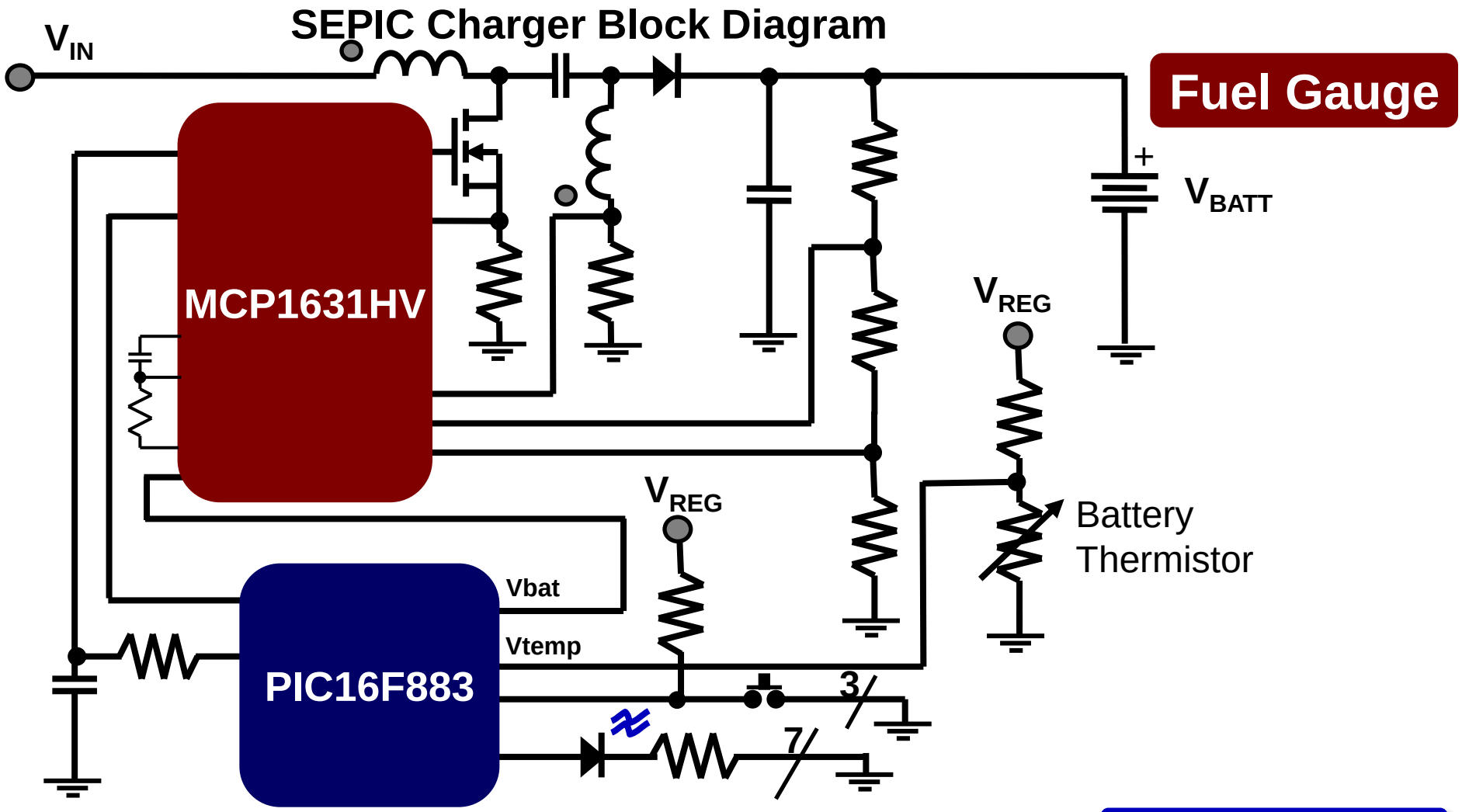

<< BACK to BLOCK DIAGRAM

PWM Controller

Suggested Products	Description	Product Web Page
MCP1630/1	• Small footprint discrete high-speed PWM controllers (2MHz) in conjunction with a MCU. • Peak Current Mode Control. • High Voltage Options Operate to +16V Input. • Integrated Overvoltage Comparator and Low Side MOSFET Driver. • Over-temperature Protection and Under-voltage Lockout (UVLO).	MCP1630 MCP1631
MCP1631RD-MCC2: MCP1631HV Multi-Chemistry Battery Charger Reference Design		Click Here
MCP1631RD-DCPC1: MCP1631HV Digitally Controlled Programmable Current Source Reference Design		Click Here

<< BACK

Microcontroller

Suggested Products	Description	Product Web Page
PIC16F883	• This powerful yet easy-to-program (only 35 single word instructions) CMOS FLASH-based 8-bit microcontroller in a 28 pin package. • The PIC16F883 features 256 bytes of EEPROM data memory, 2 Comparators, 11 channels of 10-bit ADC, 1 capture/compare/PWM and 1 Enhanced capture/compare/PWM functions, a synchronous serial port that can be configured as either 3-wire Serial Peripheral Interface (SPI™) or the 2-wire Inter-Integrated Circuit (I²C™) bus and an Enhanced Universal Asynchronous Receiver Transmitter (EUSART).	PIC16F833

<< BACK

Fuel Gauge

- **Function: To track remaining battery level or charging status**

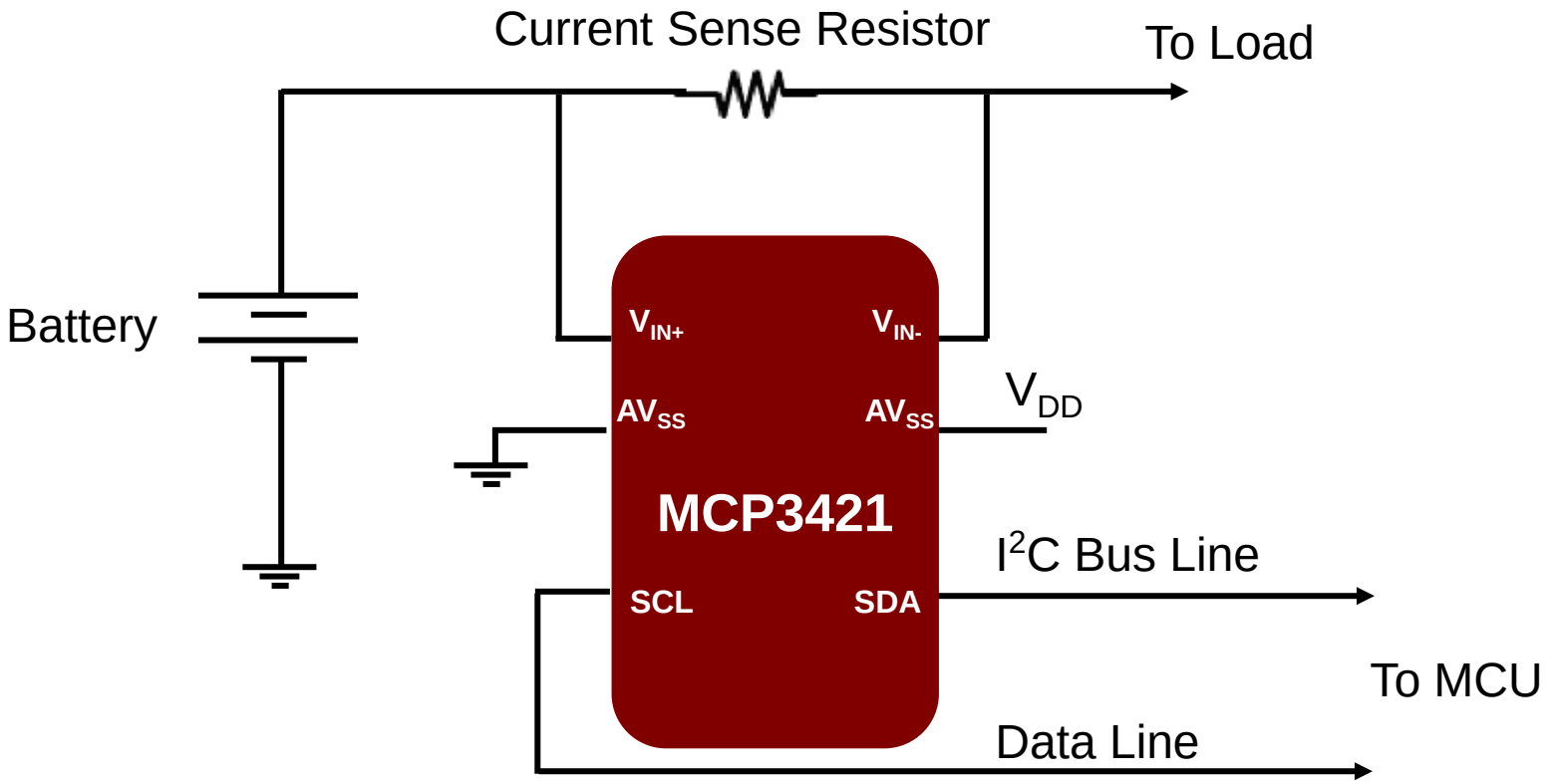

<< BACK

Analog to Digital Convertor

- **Function: Converting analog voltage or current signal (pressure) into digital data**

Popular Products	Description	Product Web Page
MCP3421	The MCP3421 is a single channel low-noise, high accuracy Delta-Sigma A/D converter with differential inputs and up to 18 bits of resolution in a small SOT-23-6 package. The device uses a two-wire I2C™ compatible serial interface and operates from a single power supply ranging from 2.7V to 5.5V.	Click Here
AN1156: Application Note on Battery Fuel Measurement Using Delta-Sigma ADC Devices		Click Here
MCP3421DM-BFG: Battery Fuel Gauge Demo Board		Click Here

<< BACK

Temperature Sensors

- **Function: Measuring and providing Temperature information**

Popular Products	Description	Product Web Page

MCP9800
Digital temperature sensor
	• 2-wire I²C™/SMBus Compatible Interface
	• User Selectable 9- to 12-Bit Resolution
	  • ±1°C Accuracy from -10°C to +85°C
	  • ±2°C Accuracy from +85°C to +125°C
	• Low Operating Current: 220 µA (typical)
	• Shutdown Mode: 1 µA (max)
		Click Here

MCP9700 Linear Active Thermistor™ ICs	The output voltage of this device is directly proportional to measured temperature. The MCP9700 can accurately measure temperature from -40C to +150C with the output calibrated to a slope of 10mV/°C and has a DC offset of 500mV.	Click Here

<< BACK to BLOCK DIAGRAM

PIC Microcontrollers

- **Function: coordinating all the control and monitor functions - the brain of the system**
- **Popular products: PIC16F182X, 178X, 75X, 15XX, 193X**
- **Attributes:**
  - Upwards of 32MHz internal OSC
  - 4 channel Programmable Switch Mode Controller (PSMC)
  - Integrated high performance comparators, op-amp, 10/12 bit ADC, 5/8/9 bit DAC, CCP, COG, NCO, CLC
  - Slope compensation
  - 256 bytes of EEPROM
  - Available in various packages

<< BACK to BLOCK DIAGRAM

Lighting

<< BACK to CONTENTS
NEXT

LED Lighting

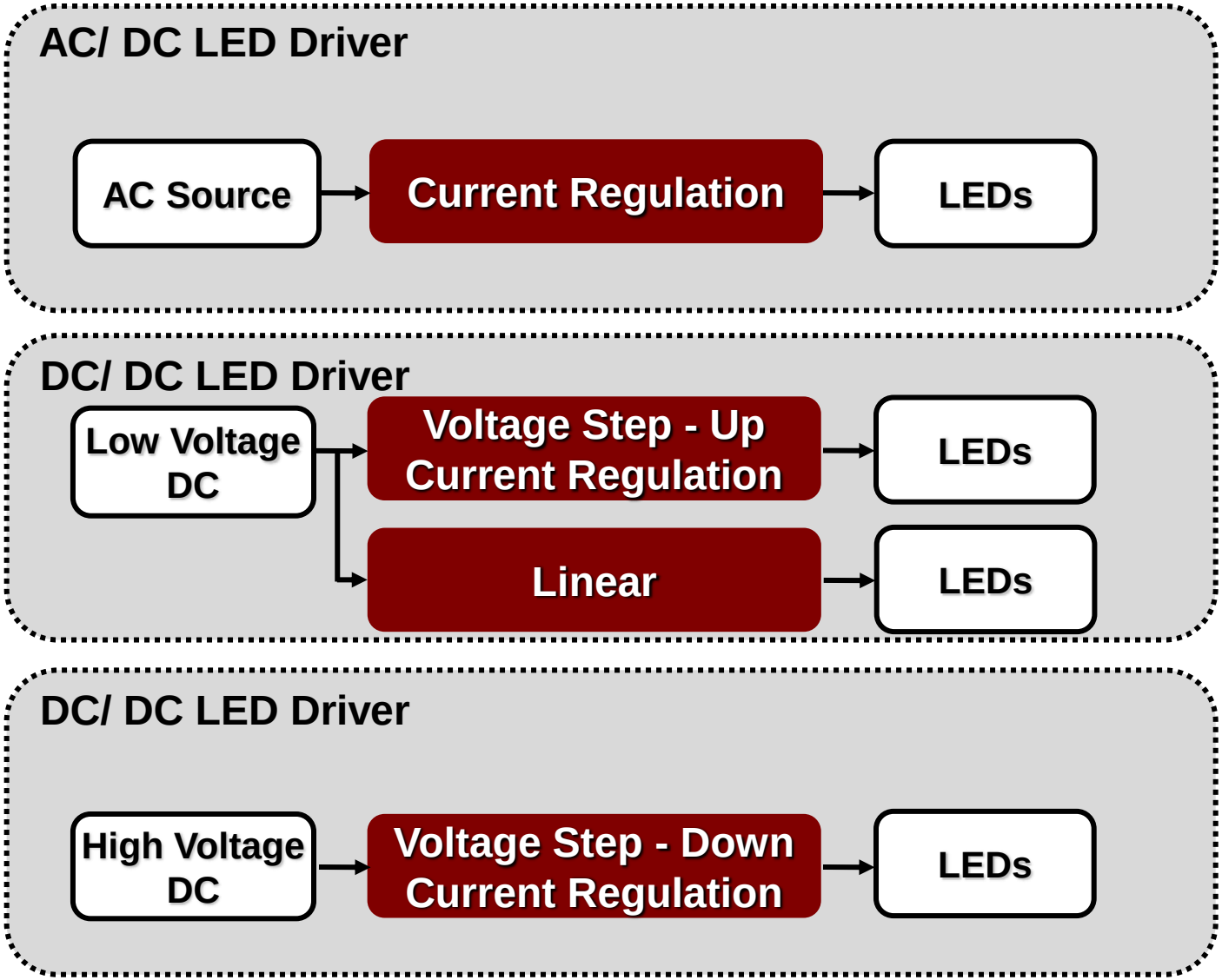

<< BACK to Ethernet Switch

<< BACK to CONTENTS

AC/ DC LED Driver-Current Regulation

Solutions	Description	
MCU + MOSFET Driver	This solution is implemented using a PIC12F752 and MOSFET drivers	Reference Circuit
Universal Offline Linear Sequential LED Driver	**Pros for Linear Solutions:** • Inherently high PF (over 90% at 220V) • No EMI (linear solution) • Very few external components • Small form	Reference Circuit
Universal Offline Switching LED Driver	**Pros for Switching Solutions** • No flicker • Higher LED utilization • More uniform brightness between channels/strings • Switching solutions generate less heat	Reference Circuit Product List

<< BACK to BLOCK DIAGRAM

AC-DC LED Driver for SSL

Suggested Products	Description	Product Web Page
CL220	CL220 operates at up to 220V, and is accurate to ±10% over a 5.0 - 160V range. The device can be used as a two terminal constant current source or constant current sink.	CL220
HV9801A	The HV9801A LED driver is ideally suited for switch dimmable applications using LED bulbs and fixtures. Through switch dimming, the lamp can be adjusted to four discrete brightness levels by rapid cycling of the light switch.	HV9801A
HV9805	The HV9805 driver IC is targeted at general LED lighting products. A two-stage topology provides true constant current drive for the LED load while drawing mains power with high power factor.	HV9805
HV9861A / HV9961	The HV9861A / HV9961 are the patented, average-mode, constant current control LED driver IC operating in a constant off-time mode. The output LED current accuracy is ±3%.	HV9861A HV9961
HV9910B / HV9910C	The HV9910B/C is an open loop, current mode, control LED driver IC. The HV9910B/C can be programmed to operate in either a constant frequency or constant off-time mode.	HV9910B HV9910C

AC-DC LED Driver for SSL Continued

Suggested Products	Description	Product Web Page
HV9911	The HV9911 is a current mode control LED driver IC designed to control single switch PWM converters (buck, boost, buck-boost, or SEPIC), in a constant frequency or constant off-time mode.	HV9911
HV9921/3/5	The HV992x family is a PWM high-efficiency LED driver control ICs. It allows efficient operation of LED strings from voltage sources ranging up to 400VDC.	HV9921/2/3 HV9925
HV9930	The HV9930 is a variable frequency PWM controller IC, designed to control an LED lamp driver using a low-noise boost-buck (Ćuk) topology.	HV9930
HV9931	The HV9931 is a fixed frequency PWM controller IC designed to control an LED lamp driver using a single-stage PFC buckboost-buck topology.	HV9931
HV9980	The HV9980 is a fully integrated 3-channel peak-current PWM controller for driving buck converters in constant output current mode.	HV9980

BACK

<< BACK to BLOCK DIAGRAM

Step-Up Current Regulation

Solutions	Description	
Programmable LED Driver	MCP19114 capable of high efficiency, high current drive in a minimal component count. Highly customizable, to maximize design flexibility, and can be implemented in flyback, SEPIC, and boost topologies.	Reference Circuit
Inductive Boost Converter LED Drive Solutions	MCP1643 is a constant current drive circuit with a low component count, up to 550 mA output current, up to 90% efficient, with a low 1.2 uA shutdown current, and dimmable with a PWM signal. Also, HV99xx for High Voltage and MIC32xx for High Power applications to meet different requirements.	Reference Circuit Product List
Portable & High Brightness Family	The MIC287x family is a high-current, high-efficiency flash LED driver for one or two high-brightness camera flash LEDs.	Reference Circuit
Charge Pump LED Drive Circuit	MCP125x family generates a high accuracy 3.3V output from a 1.8 to 3.6V input, which can be used to supply up to 100mA of output current for LED drive from a variety of battery or DC power sources	Reference Circuit

<< BACK to BLOCK DIAGRAM

DC-DC Boost

Suggested Products	Description	Product Web Page
HV9912	The HV9912 is a current mode control LED driver IC designed to control single switch PWM converters (buck, boost, buck-boost or SEPIC) in a constant frequency mode. Internal 90V regulator.	HV9912
HV9963	The HV9963 is a current mode control LED driver IC designed to control single switch PWM converters (buck, boost, buck-boost or SEPIC) in a constant frequency mode. Internal 40V regulator.	HV9963
HV9985	The HV9985 is a three-channel peak current mode PWM controller for driving single switch converters in a constant output current mode. It can be used for driving either RGB LEDs or multiple channels of white LEDs.	HV9985
MIC3223	The MIC3223 is a constant current boost LED driver capable of driving a series string of high power LEDs. The MIC3223 can be used in general lighting, bulb replacement, garden pathway lighting, and other solid state illumination application.	MIC3223
MIC3230/31/32	The MIC3230/1/2 are constant current boost switching controllers specifically designed to power one or more strings of high power LEDs. The MIC3230/1/2 have an input voltage range from 6V to 45V and are ideal for a variety of solid state lighting applications.	MIC3230/1/2

BACK

MIC2873/4 1.2A High Brightness Flash LED Driver

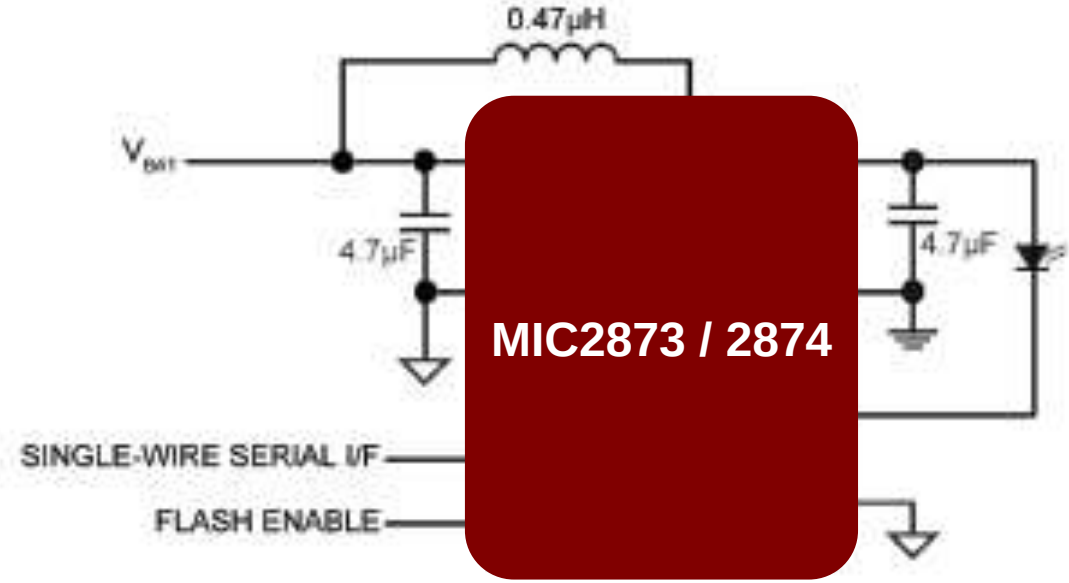

- Best-in-class efficiency (up to 92%)
- High-accurate LED current control
- High switching frequency up to 4MHz
- Requires only three external components
- Total solution size < 10mm2

BACK

MIC2874

Popular Products	Description	Product Web Page
MIC2874	The MIC2874 is a high-current, high-efficiency flash LED driver. The LED driver current is generated by an integrated inductive boost converter with a 4MHz switching frequency which allows for the use of very small inductor and output capacitor. These features make the MIC2874 an ideal solution for high-resolution camera phone LED flash light driver applications. MIC2874 operates in either flash or torch modes that can be controlled through the single-wire serial interface and/or external control pin. A robust single-wire serial interface allows the host processor to control the LED current and brightness. The MIC2874 is available in a 9-bump 1.30mm x 1.30mm WLCSP package.	Click Here

BACK

Step-Down Current Regulation

Solutions	Description	
LDO+MCU+ MOSFET Driver	Digitally controlled, high brightness LED drive circuit implemented using a discrete buck circuit controlled with a PIC12F752 MCU	Reference Circuit
Buck Current Mode LED Drive circuit	HV9967B is a compact buck LED drive solution with tight (3%) current regulation, short circuit protection, and capable of 60V DC input with the integrated low side MOSFET. Also, Other HV99xx for High Voltage and MIC32xx for High Power applications to meet different requirements.	Reference Circuit Product List
Buck Voltage Mode LED Drive Circuit	MCP16312 is a constant current source to drive one or more LEDs using a buck implementation. Low component count, with integrated MOSFETs and control logic	Reference Circuit
Ćuk Converter LED Drive Circuit	MCP16301 is compact, low component count, 300 mA constant current regulation circuit capable of driving up to 15V of LEDs in series	Reference Circuit

<< BACK to BLOCK DIAGRAM

DC-DC Buck

Suggested Products	Description	Product Web Page
HV9967B	The HV9967B is an average-mode current control LED driver IC operating in a constant off-time mode. The IC features an integrated 60V, 0.8Ω MOSFET that can be used as a stand-alone buck converter switch, or connected as a source driver for driving an external high-voltage depletion-mode MOSFET.	HV9967B
HV9918 / HV9919B	The HV9918 is a PWM controller IC designed to drive HB LEDs using a buck topology. It operates from an input voltage of 4.5 to 40VDC and employs hysteretic control with a high-side current sense resistor to set the constant output current up to 700mA.	HV9918 HV9919B
MIC3201 MIC3202/3202-1	The MIC3201/2 are hysteretic, step-down, constant-current, HB LED drivers. It provides an ideal solution for interior/exterior lighting, architectural and ambient lighting, LED bulbs, and other general illumination applications.	MIC3201 MIC3202
MIC3203/3203-1	The MIC3203 is a hysteretic, step-down, constant-current, HB LED driver. A high-frequency switching operation up to 1.5MHz allows the use of smaller external components minimizing space and cost.	MIC3203
MIC3205	The MIC3205 is a hysteretic, step-down, HB LED driver with a patent pending frequency regulation scheme that maintains a constant operating frequency over input voltage range.	MIC3205

BACK

DC-DC Linear

Suggested Products	Description	Product Web Page
MIC2841A/42A/ 43A/44A/46A	The MIC284x family is a group of high efficiency White LED drivers, greatly extending battery life for portable display backlighting, keypad backlighting and camera flash in mobile devices.	MIC2841A /42A MIC2843A MIC2844A/46A
MIC2860-2D/2P	The MIC2860-2D/2P architecture provides the highest possible efficiency by eliminating switching losses present in traditional charge pumps or inductive boost circuits.	MIC2860-2D MIC2860-2P
MIC4801/02	The MIC4801/2 is a high efficiency White LED (WLED) driver designed to drive a single LED up to 600mA. The constant current driver is designed to drive high power LEDs in various lighting applications.	MIC4801 MIC4802
MIC4811/12	The MIC4811 features Dynamic Average Matching™ (DAM™) which is specifically designed to provide optimum matching across all WLEDs. The high accuracy (±1% typical) current regulated WLED channels ensure uniform display illumination under all conditions.	MIC4811 MIC4812
MM5450/51 MIC5400	The MM545x are monolithic MOS ICs fabricated in an N-Channel, metal-gate process for LED Display.	MM5450/51 MIC5400

<< BACK to BLOCK DIAGRAM

DC/ DC MCU Based LED Driver

<< BACK to CONTENTS

NEXT

DC/ DC MCU Based LED Driver

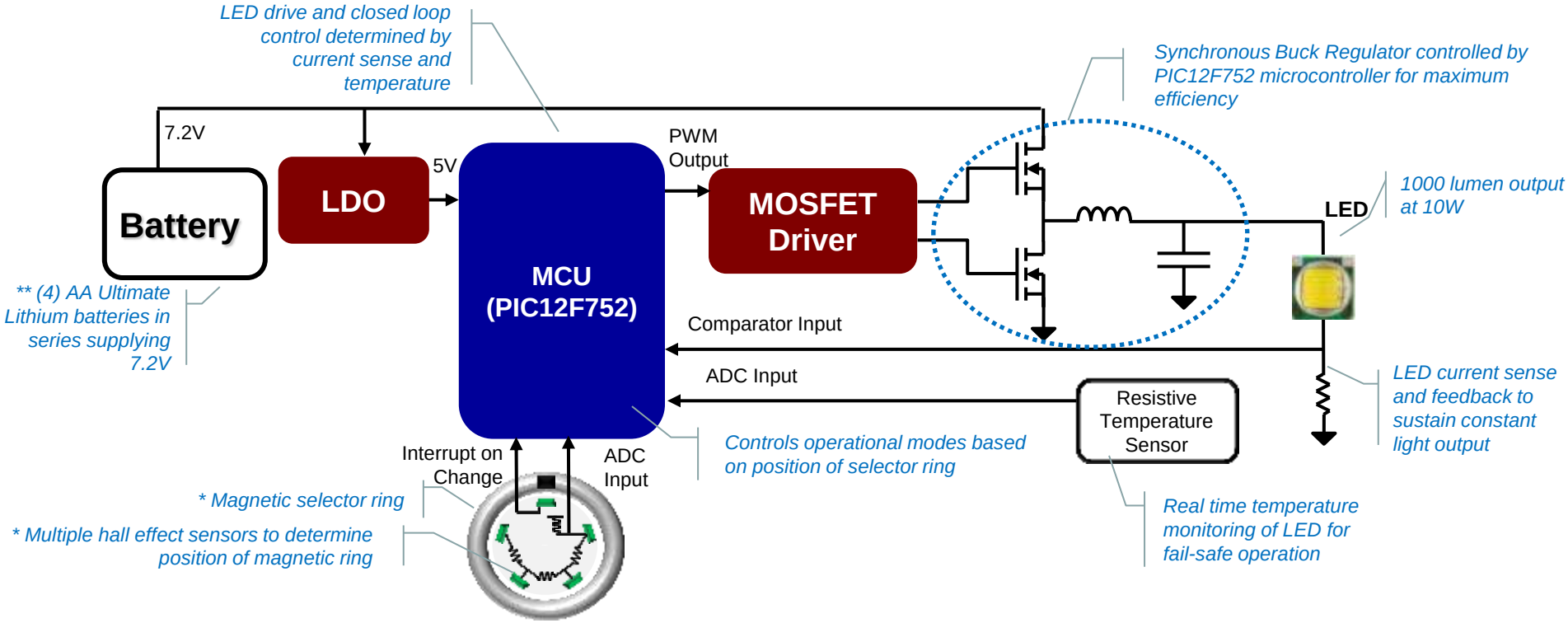

** Magnetic selector ring design can be replaced to accommodate mechanical push-buttons and switches*
*** Battery capacity can be scaled to accommodate specific mechanical capacity and desired run-times*

<< BACK

PIC12F752

- **LED drive and closed loop control determined by current sense and temperature**
- **Controls operational modes based on position of selector ring**

5b Digital Analog Converter (DAC)
Allows the use of smaller current sense resistor
High resolution eliminates external Op-amp
Less power consumption and better efficiency

High Performance Comparators
40ns response time

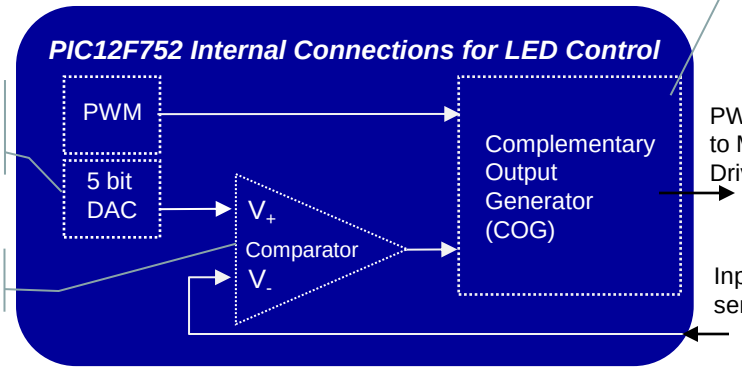

Complementary Output Generator (COG)
1 of 2 available outputs utilized I
Frequency determined by PWM
Provides dead-band control for the synchronous switches
Provides blanking control to prevent transient behavior

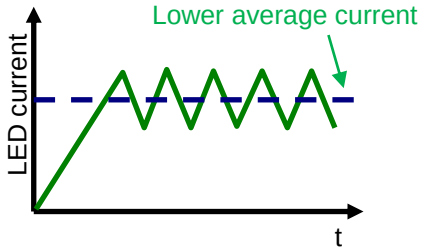

Click Here for the Product Page

<< BACK to BLOCK DIAGRAM

Synchronous Buck MOSFET Drivers

- **Function: driving the high power devices (MOSFETs in synch. Buck configuration**

Popular Products	Description	Product Web Page
MCP14628 Dual Output MOSFET Driver for Synchronous Applications	The MCP14628 is a synchronous MOSFET driver used for driving MOSFETs in a rectified bridge arrangement. There are two separate drivers contained in the MCP14628. The low-side driver output drives a non-floating or ground reference N-Channel MOSFET. The high-side driver is designed to drive a floating N-Channel MOSFET. An external bootstrap capacitor is used to provide the additional voltage.	Click Here
MCP14700 Synchronous MOSFET Driver w/separate High/Low side control	The MCP14700 is a high-speed synchronous MOSFET driver designed to optimally drive a high-side and low-side N-Channel MOSFET. The MCP14700 has two PWM inputs to allow independent control of the external N-Channel MOSFETs.	Click Here

<< BACK to BLOCK DIAGRAM

Low Power LDOs

- **Function: providing regulated, low-noise supply voltages for the system**

Popular Products	Description	Product Web Page
MCP1700	The MCP1700 can source up to 250mA of current with an extremely low input-output voltage differential of 178mV at 250mA. with the low current consumption of only	Click Here
MCP1703A	With 250 mA maximum output, MCP1703 works with input voltage of up to 16V and in combination with its low current consumption of 2 µA	Click Here

<< BACK to BLOCK DIAGRAM

AC/DC LED Driver System

<< BACK to CONTENTS
NEXT

AC/DC MCU Based LED Driver System

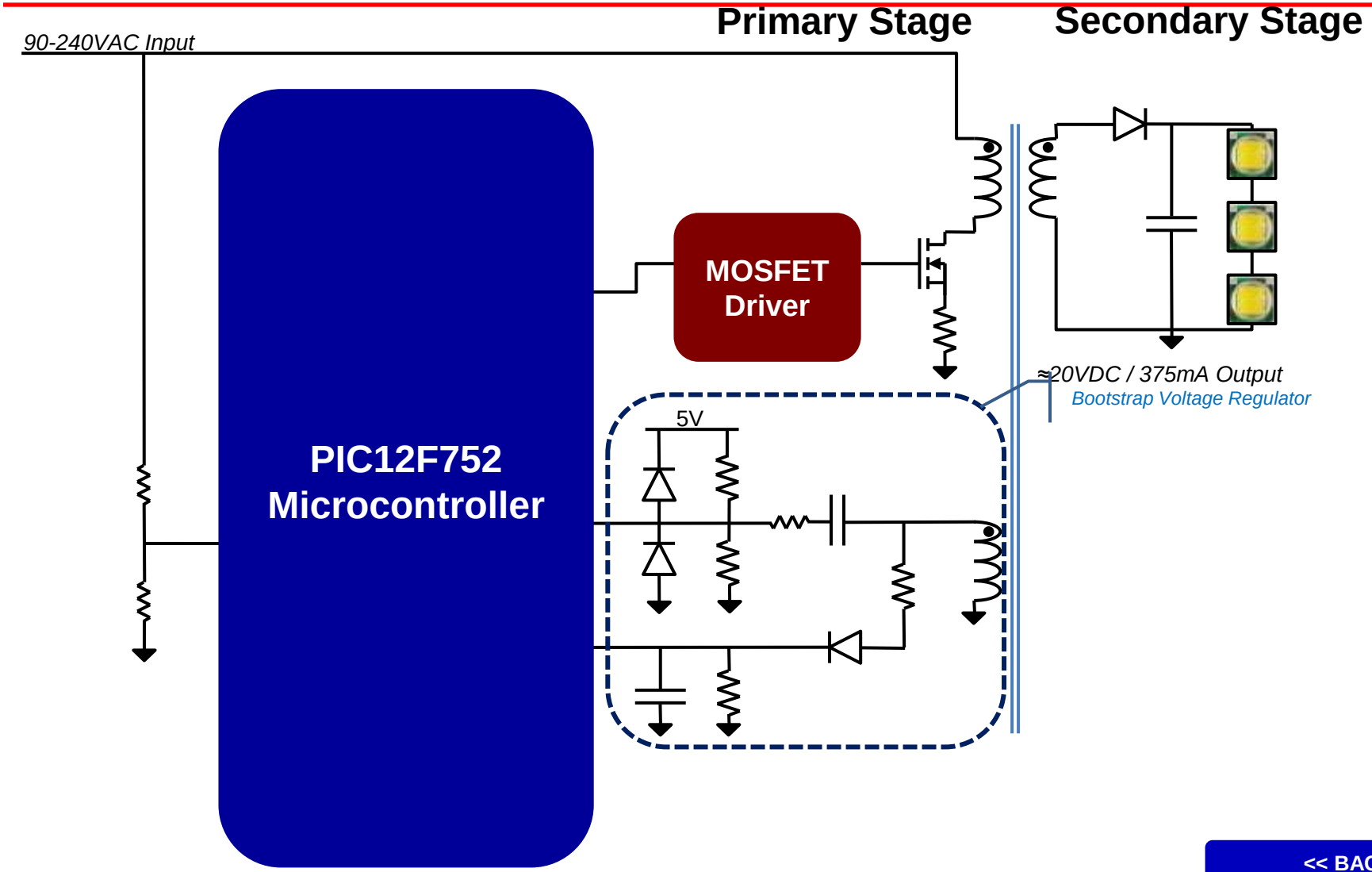

<< BACK

PIC12F752

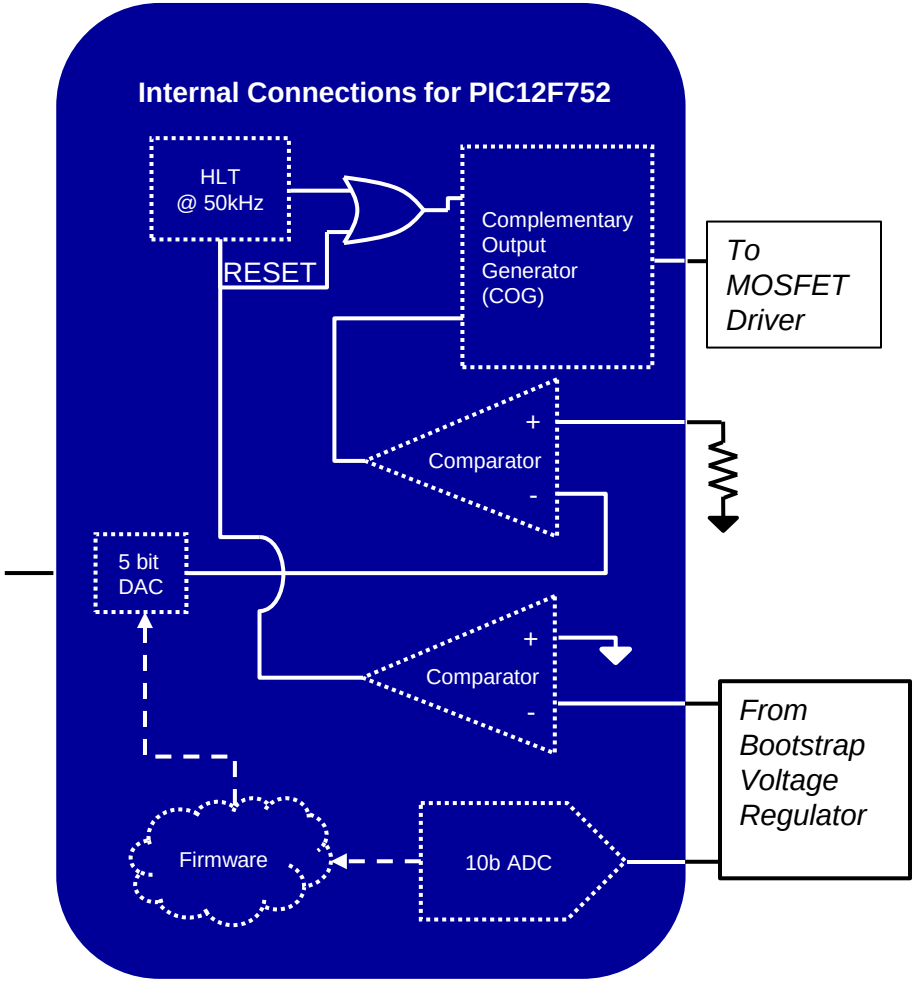

- 8-Pin Flash-Based, 8-Bit CMOS MCU
- Flash Program Memory with self read/write capability
- Mid-Range Core, Internal 8MHz oscillator
- 2 x High Speed Analog Comparators (50nS)
- 1 x Capture-Compare-PWM (CCP)
- 4 x 10-bit Analog-to-Digital Converter (ADC) with voltage reference,
- 1 x Dual Range 5-bit Digital-to-Analog Converter (DAC)
- Complementary Output Generator (COG): Complementary Waveforms from selectable sources
- Watchdog Timer (WDT)
- Power-On/Off-Reset, Brown-Out Reset (BOR)
- In Circuit Serial Programming (ICSP)
- Wide Operating Voltage of PIC12F752 variant
- High Voltage PIC12HV752 variant (2.0V – user defined) with internal shunt regulator

Click Here for the Product Page

<< BACK to BLOCK DIAGRAM

MOSFET Drivers

- **Function: driving the high power devices (MOSFETs, bipolar transistors, IGBTs)**

Popular Products	Description	Product Web Page
TC4427A	Supply Voltage Range: 2.5V to 5.5V Wide Temperature Measurement Range: -40°C to +125°C High Temperature Converter Accuracy: ± 2°C, Max, at 25°C Linear Temperature Slope: 10mV/°C Very Low Supply Current: 35µA Typical	Click Here
MCP1415/16	The MCP1415/16 devices are small footprint Low-Side MOSFET drivers capable of supplying 1.5A peak output current in a SOT23 5L package.	Click Here
MCP14E3/E4/E5	The MCP14E3/E4/E5 devices are a family of 4.5A,dual output buffers/MOSFET drivers with seperate enable functions for each output. As MOSFET drivers, the MCP14E3/E4/E5 can easily charge 2200 pF gate capacitance in under 28 nsec (max)	Click Here

<< BACK to BLOCK DIAGRAM

LED Driver System using MCP19114

<< BACK to CONTENTS

NEXT

Programmable LED Driver

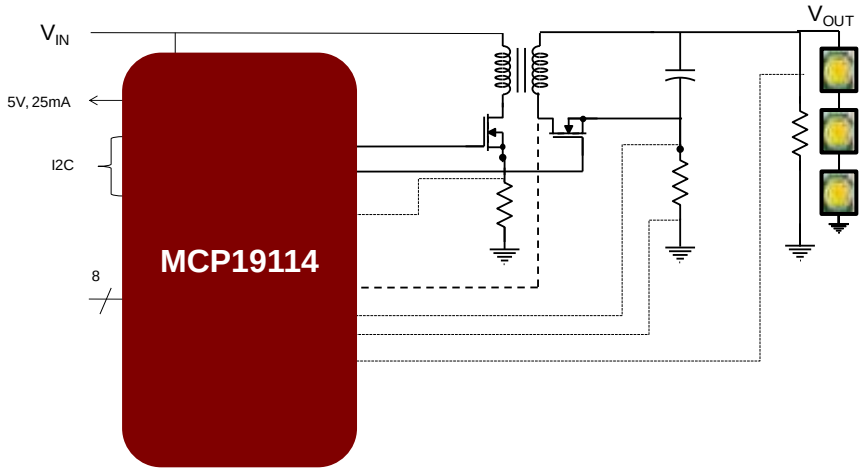

SEPIC Topology

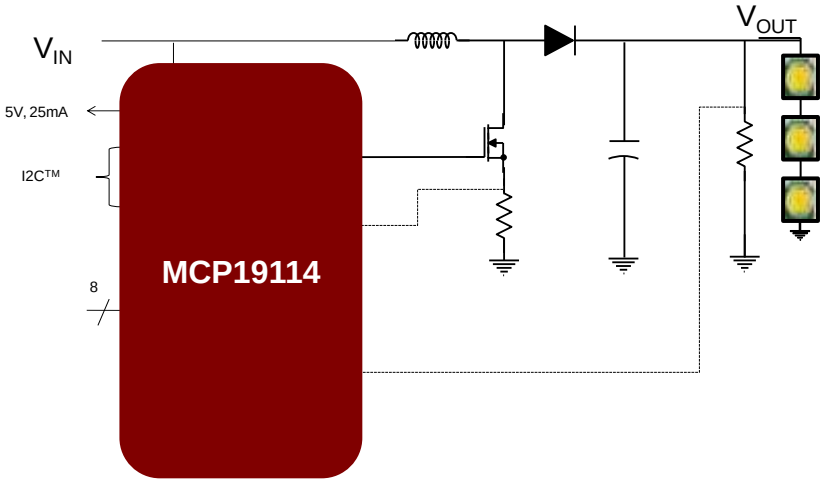

Boost Topology

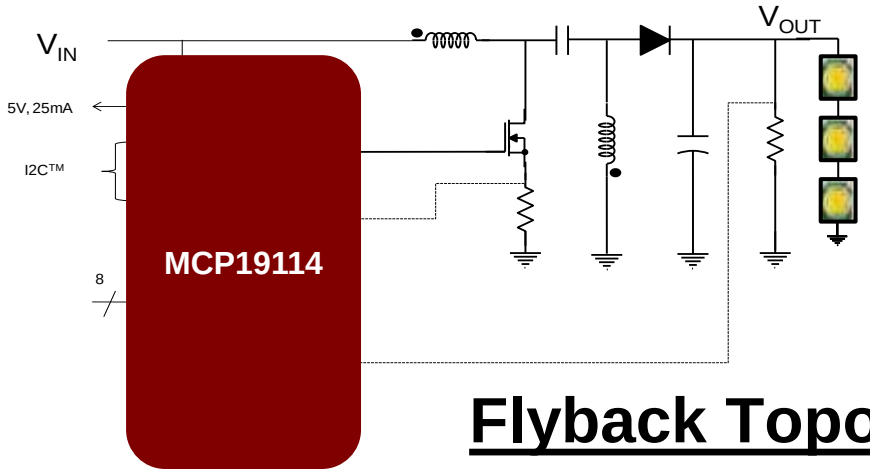

Flyback Topology

(Synchronous)

…and more, including Ćuk and Forward Converters (Broad Topology Support)

<< BACK

MCP19114

Popular Products	Description	Product Web Page
MCP19114/5	The MCP19114 is a mid-voltage (4.5-42V) analog-based PWM controller with an integrated 8-bit PIC™ Microcontroller. This unique product family combines the performance of a high-speed analog solution, including high-efficiency and fast transient response, with the configurability and communication interface of a digital solution. Combining these solution types creates a new family of devices that maximizes the strengths of each technology to create a more cost-effective, configurable, high-performance power conversion solution.	Click Here
MCP19114 Flyback Standalone Evaluation Board The MCP19114-Flyback Standalone Evaluation Board and Graphical User Interface (GUI) demonstrate the MCP19114 performance in a synchronous Flyback topology. It is configured to regulate load current, and is well suited to drive LED loads.		

<< BACK to BLOCK DIAGRAM

Supertex LED Drivers

<< BACK to CONTENTS
NEXT

Sequential Linear LED drivers (120V/ 230VAC)

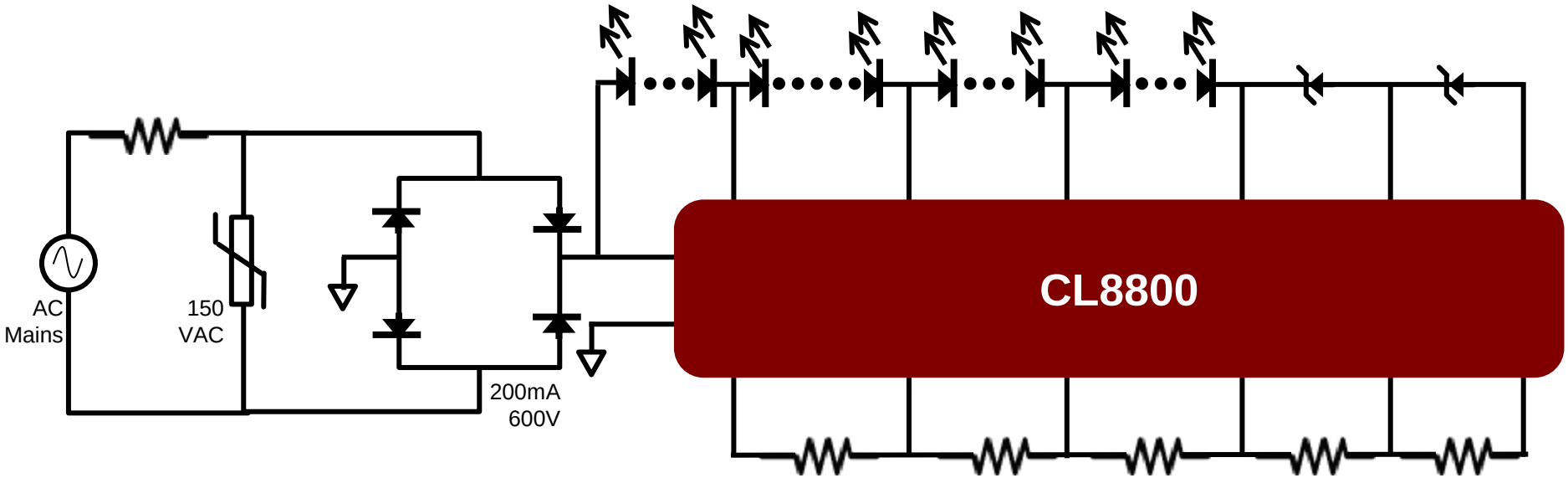

- Up to 1000 Lumens at 100Lm/W
- Direct AC Operation at 120VAC / 230VAC
- Inherently Quiet — No EMI Filters Needed
- Inherent Dimmer Compatibility

Switching LED Driver Solution
<< BACK

CL8800

Popular Products	Description	Product Web Page
CL8800	CL8800 and CL8801, sequential, linear LED drivers designed to drive long strings of low cost, low current LEDs in solid-state replacements for fluorescent tubes, incandescent bulbs and CFL bulbs. Both ICs minimize driver circuit component counts, requiring just four or six resistors and a diode bridge in addition to the IC. Two to four additional components in the circuit provide transient protection, and neither capacitors nor magnetic components are required. Because the ICs are multi-stage linear current regulators, there are no high frequency switching currents and, thus, no need for a front-end EMI filter. CL8800 is intended for 230VAC input, while CL8801 is for 120VAC input. Luminous efficiencies of greater than 115lm/W are achievable with both ICs.	Click Here

<< BACK

Universal Offline Switching LED driver Solution

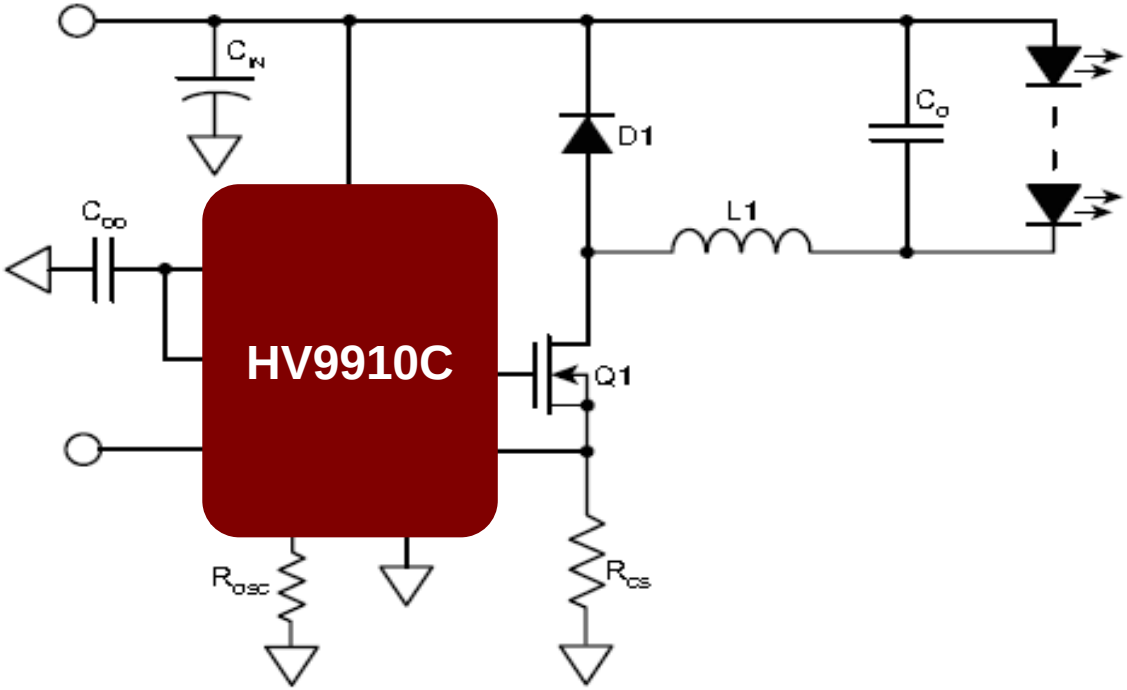

- Universal Inputs – 110 to 240Vac
- High Power Factor – 0.94 or higher
- High Efficiency – 88%@110Vac & 85%@230Vac
- Example Application: 20W LED tube

Sequential Linear Solution

<< BACK

HV9910C

Popular Products	Description	Product Web Page
HV9910C	HV9910C is designed to convert high voltage supplies (85V – 265VAC rectified) or (15V – 450VDC) to a constant current source for powering a string or a combination of strings of high brightness LEDs. It can be programmed to operate in either a constant frequency or constant off-time mode and includes a 15 – 450V linear regulator which allows it to work from a wide range of input voltages without the need for an external low voltage supply. HV9910C requires only three external components (apart from the power stage) to produce a controlled LED current making it an ideal solution for low system cost. Furthermore, the low component count allows for higher reliability and minimum board space.	Click Here

<< BACK

HV9912 Based LED Driver

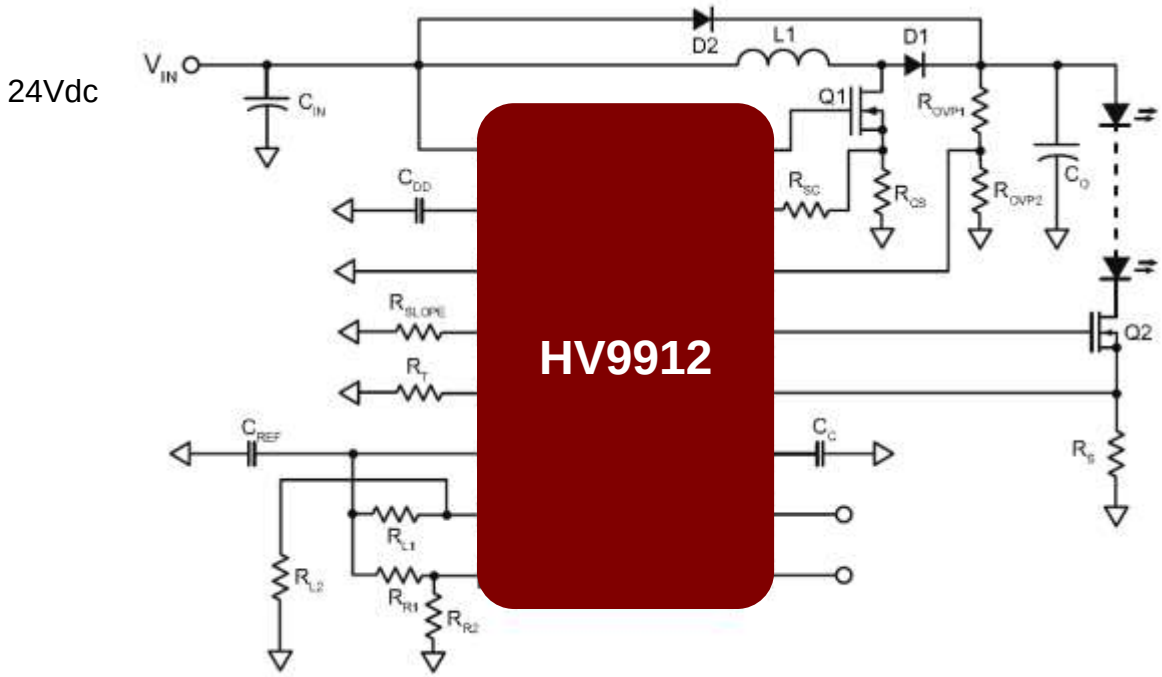

90Vdc (max)
Ex. 20pcs 1W LED in series

- **High Efficiency – greater than 90%**
- **High output current accuracy - Closed loop control**
- **High Boost – 10x from Vin of 9V to V_{out} of 90V**
- **Example Application: 20W LED Strip**

<< BACK

HV9912

Popular Products	Description	Product Web Page
HV9912	The HV9912 is a current mode control LED driver IC designed to control single switch PWM converters (buck, boost, buck-boost or SEPIC) in a constant frequency mode. The controller uses a peak current-mode control scheme with programmable slope compensation and includes an internal transconductance amplifier to control the output current in closed loop enabling high output current accuracy. In the constant frequency mode, multiple HV9912 ICs can by synchronized to each other or to an external clock using the SYNC pin. Programmable MOSFET current limit enables current limiting during input under voltage and output overload conditions. The IC also includes a 0.2A source and 0.4A sink gate driver that makes the HV9912 suitable for high power applications	Click Here

<< BACK to BLOCK DIAGRAM

HV9967B based Buck LED Driver

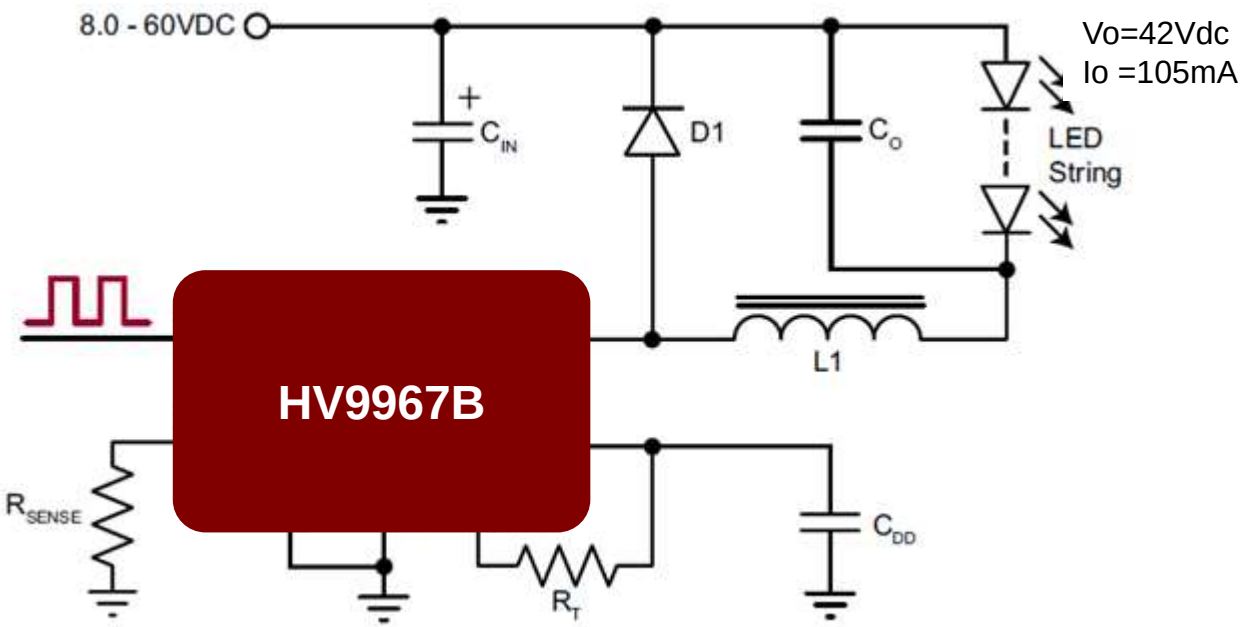

- High current accuracy – 3% LED Current control
- Space saving – integrated 60V MOSFET
- Output short circuit & over-temp protection
- Example Application: Cove Lights

<< BACK

HV9967B

Popular Products	Description	Product Web Page
HV9967B	The HV9967B is an average-mode current control LED driver IC operating in a constant off-time mode. The IC features an integrated 60V, 0.8Ω MOSFET that can be used as a stand-alone buck converter switch, or connected as a source driver for driving an external high-voltage depletion-mode MOSFET. The HV9967B is powered through its switching output when the integrated switch is off. Hence, the same external MOSFET can be used as a high-voltage linear regulator for powering the IC. The LED current is programmed with one external resistor. The average-mode current control method does not produce a peak-to-average error, and therefore greatly improves current accuracy and line and load regulation of the LED current without any need for loop compensation or direct sensing of the LED current at a high-voltage potential. The auto-zero circuit cancels the effects of the input offset voltage and of the propagation delay of the current sense comparator.	Click Here

<< BACK to BLOCK DIAGRAM

LED Driver System using Regulators

<< BACK to CONTENTS
NEXT

MCP16301 Cuk LED Drive Circuit

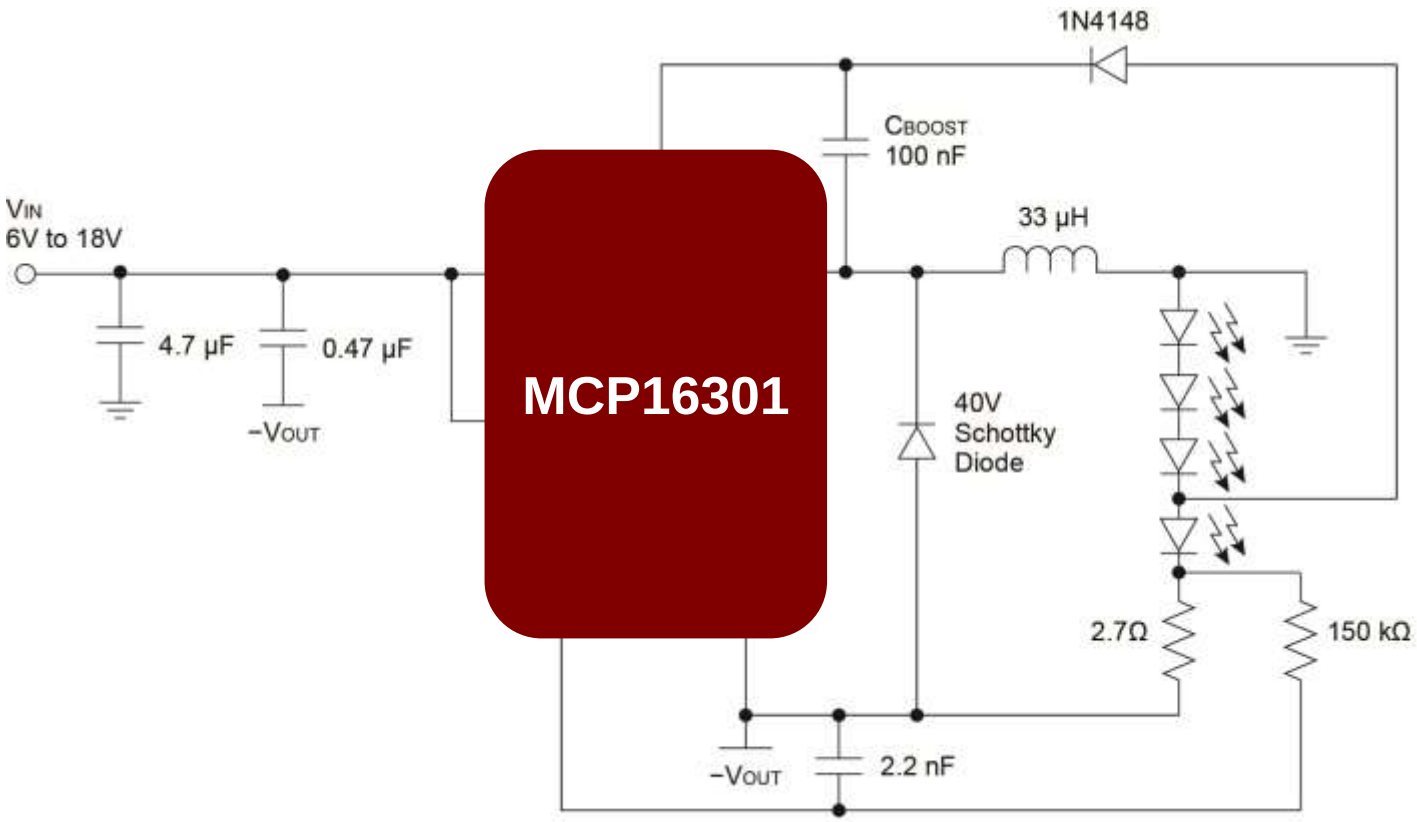

<< BACK

MCP16301

Popular Products	Description	Product Web Page
MCP16301	The MCP16301 is a high-input voltage step-down regulator, capable of supplying 600 mA to a regulated output voltage from 2.0V to 15V. •Operation from 6V to 18V input voltage •Capable of supplying 300 mA of current •Drives up to 15V of LEDs in series •Implemented with only 11 components •Demo board available on Microchip direct	Click Here

<< BACK to BLOCK DIAGRAM

MCP1259 Charge Pump LED Lighting Circuit

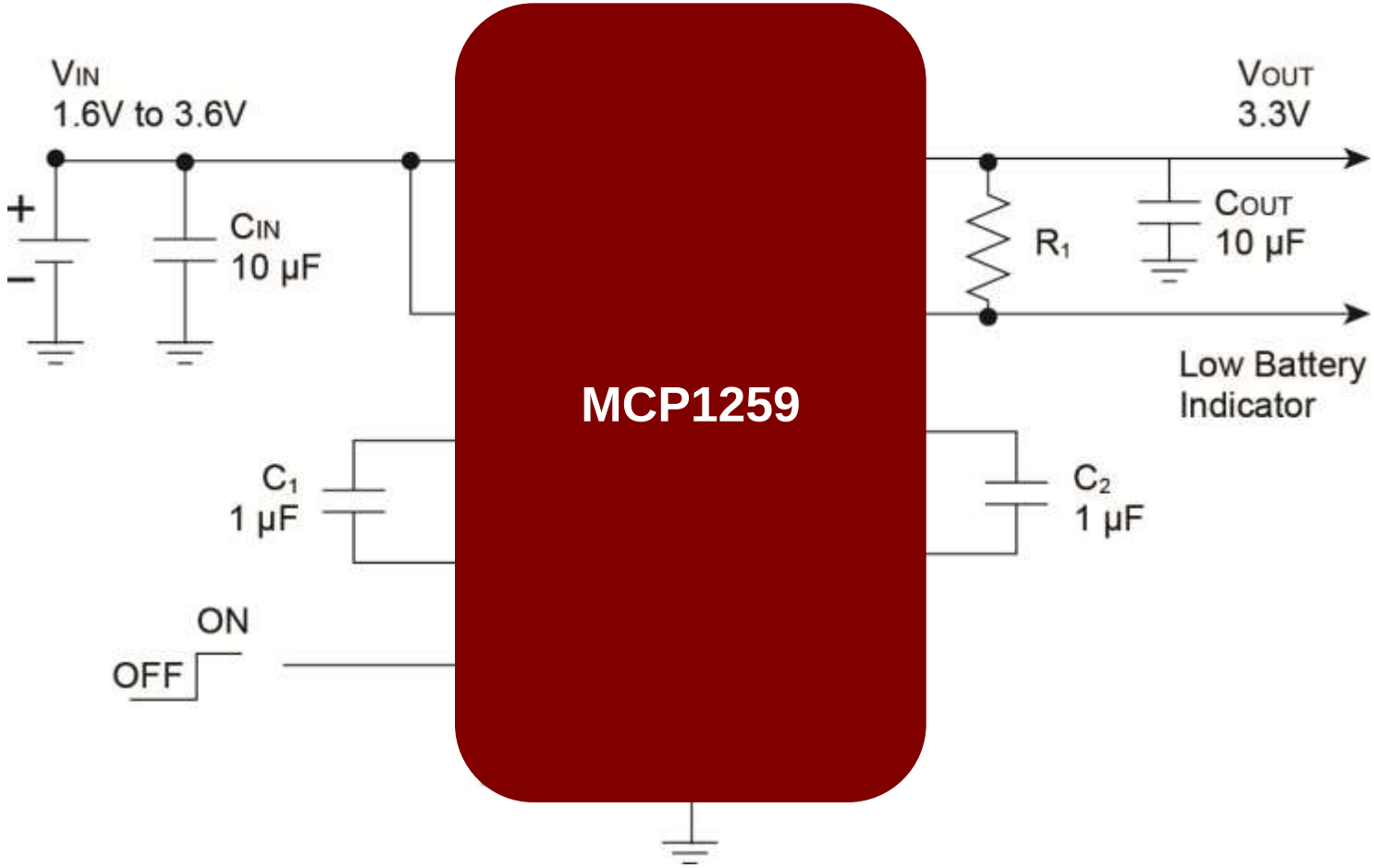

<< BACK

MCP1259

Popular Products	Description	Product Web Page
MCP1259	The MCP1256-9 family of inductorless, positive regulated charge pump DC/DC converters, generate a regulated 3.3 V output voltage from a 1.8 V to 3.6 V input. They are specifically designed for applications operating from 2 cell alkaline, 2 cell Ni-Cd, 2 cell Ni-MH, or one primary lithium coin cell battery. These devices automatically switch from 1.5x to 2x boost operation modes to maintain high efficiency. In addition, at light output loads, the MCP1256 and MCP1257 can be placed in a sleep mode, lowering the quiescent current while maintaining the regulated output voltage.	Click Here

<< BACK to BLOCK DIAGRAM

MCP16312 Buck Converter LED Drive Application

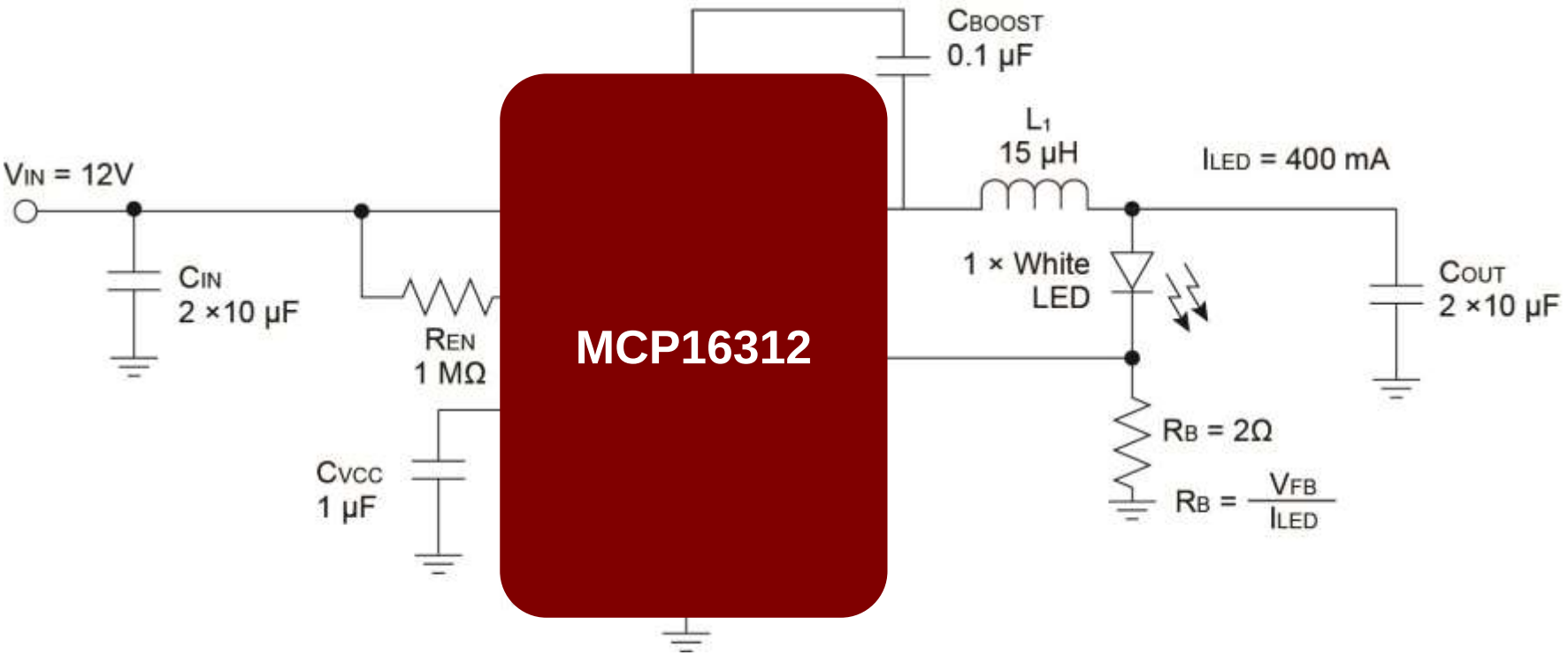

<< BACK

MCP16312

Popular Products	Description	Product Web Page
MCP16312	Up to 95% Efficiency Input Voltage Range: 4.4V to 30V 1A Output Current Capability Output Voltage Range: 2.0V to 24V Integrated N-Channel Low and High-Side Switches Low Device Shutdown Current: 3 µA typical Low Device Quiescent Current: 44 µA Internal Compensation Internal Soft-Start: 300 µs (EN low to high) Peak Current Mode Control Cycle-by-Cycle Peak Current Limit Undervoltage Lockout (UVLO) Overtemperature Protection MSOP-8 or 2x3 TDFN-8 package	Click Here

<< BACK to BLOCK DIAGRAM

MCP1643 Boost Converter LED Drive Solutions

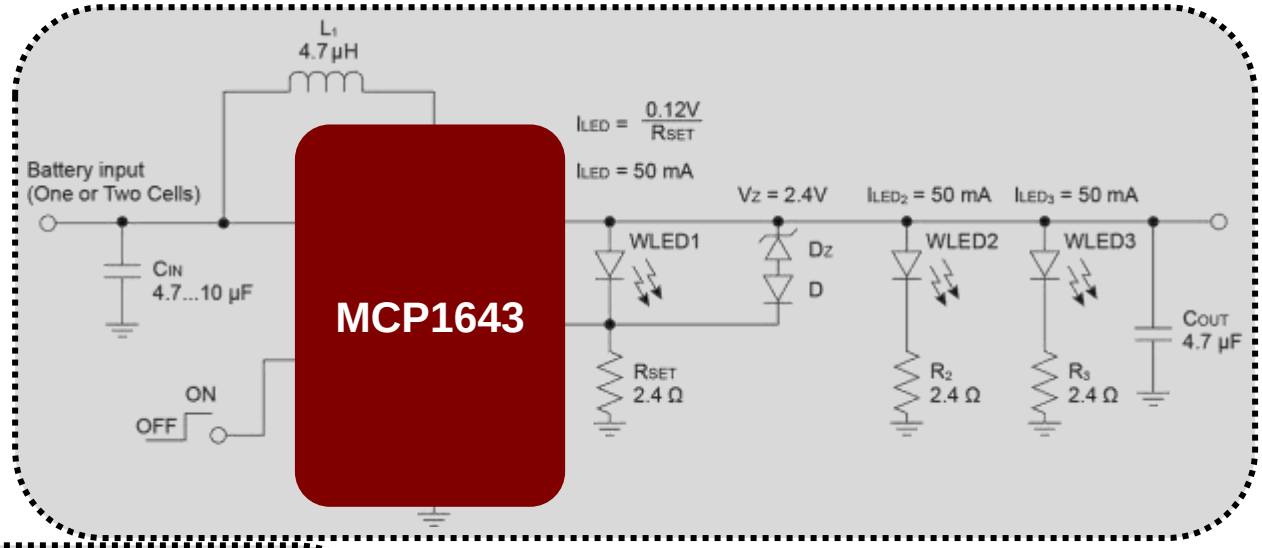

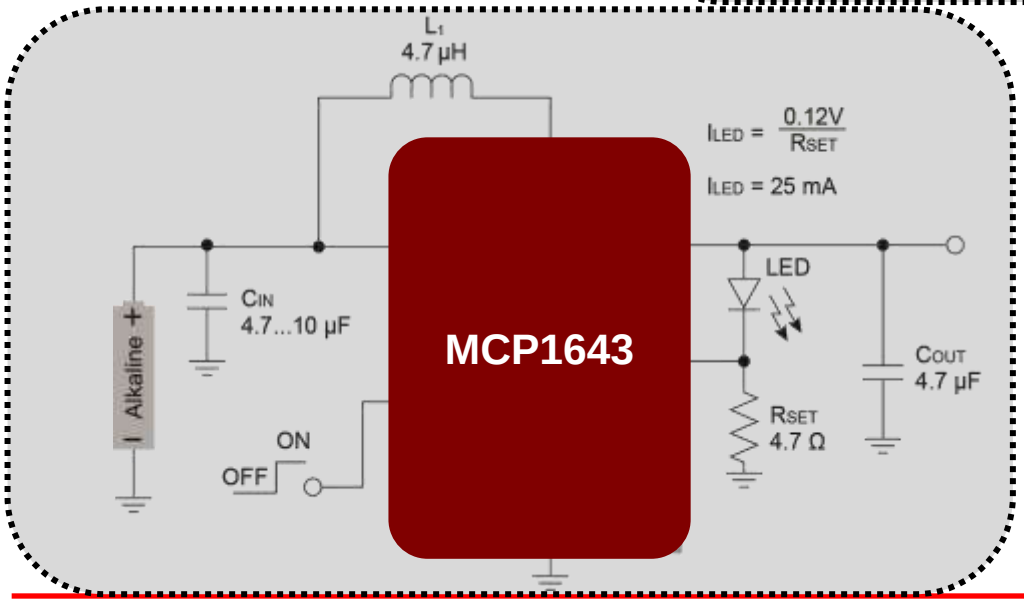

<< BACK

MCP1643

Popular Products	Description	Product Web Page
MCP1643	MCP1643 is a compact, high-efficiency, fixed frequency, synchronous step-up LED driver, that operates from one and two-cell alkaline and NiMH/NiCd batteries and can also drive two red/green/yellow series connection LEDs. - Constant current drive capability with a low component count, area-efficient circuit - 1 MHz PWM synchronous boost operation with up to 550 mA output current - Low-voltage reference input to maximize LED efficiency conversion (VFB = 120 mV) - Capable of start up with only 0.65V input, and continuous operation with an input above 0.5V - Low 1.2 µA shutdown current - Over-voltage protection halts device operation (floating output) if the LED fails or is disconnected - Up to 90% efficiency - 240 µs soft start time - Available in tiny footprint 8-lead 2×3 DFN or 8-pin MSOP packages	Click Here

<< BACK to BLOCK DIAGRAM

Multifunction Compact Keyboard
(using AVR MCU)

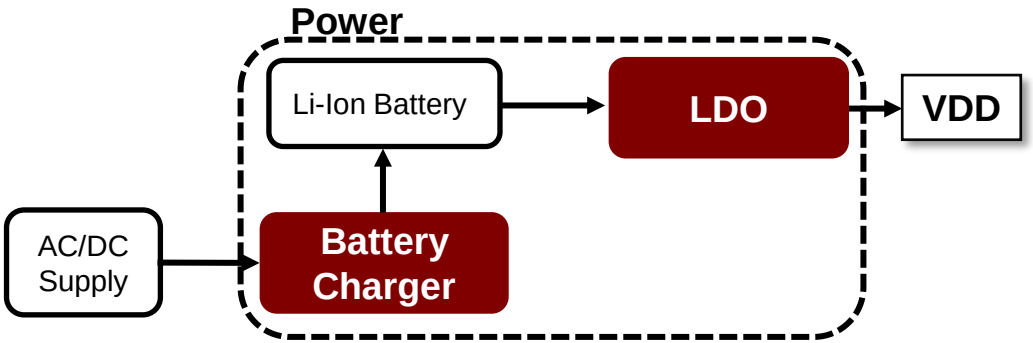

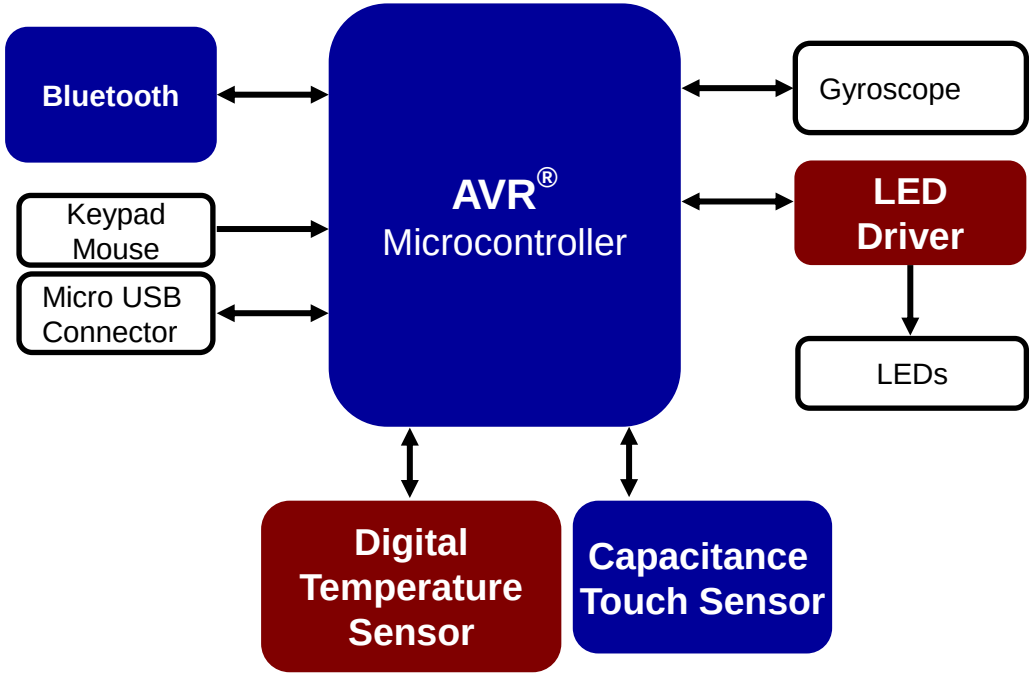

<< BACK to CONTENTS

AVR 8-bit Microcontroller

- **Function: System control and decision making**

Popular Products	Description	Product Web Page
ATmega32L	The high-performance, low-power 8-bit AVR RISC-based microcontroller combines 32KB ISP flash memory with read-while-write capabilities, 1KB EEPROM, 2KB SRAM, 54/69 general purpose I/O lines, 32 general purpose working registers, a JTAG interface for boundary-scan and on-chip debugging/programming, three flexible timer/counters with compare modes, internal and external interrupts, serial programmable USART, a universal serial interface (USI) with start condition detector, an 8-channel 10-bit A/D converter, programmable watchdog timer with internal oscillator, SPI serial port, and five software selectable power saving modes. The device operates between 2.7-5.5V.	Click Here

<< BACK to BLOCK DIAGRAM

Battery Chargers

- **Function: Charge & monitor Lithium battery**

Popular Products	Description	Product Web Page
MCP731xx	The MCP73811/2 devices are linear charge management controllers that are designed to provide specific charge algorithms for single cell Li-Ion or Li-Polymer battery to achieve optimal capacity in the shortest charging time possible.	Click Here

<< BACK to BLOCK DIAGRAM

LDO

- **Function: Provides regulated, low-noise supply voltages for the system**

Popular Products	Description	Product Web Page
MIC5353	The MIC5353 is a 500 mA, ceramic output cap stable, low output voltage, Low Dropout Regulator. The MIC5353 is packaged in very small 1.6x1.6mm DFN package. This part has high PSRR of 60dB with low output noise of 30 uVrms for noise sensitive applications	Click Here
MCP1703A	With 250 mA maximum output, MCP1703 works with input voltage of up to 16V and in combination with its low current consumption of 2 µA	Click Here

<< BACK to BLOCK DIAGRAM

Digital Temperature Sensor

- **Function: Temperature measurement with digital output**

Popular Products	Description	Product Web Page
MCP9808	The MCP9808 converts temperatures between -20°C and +100°C to a digital word with ±0.5°C (max.) accuracy	Click Here

<< BACK to BLOCK DIAGRAM

LED Driver

Function: Drive LEDs for backlighting

Popular Products	Description	Product Web Page
MIC3263	The MIC3263 is a high-efficiency pulse-width modulation (PWM) boost switching regulator that is optimized for constant-current WLED driver backlighting applications. The MIC3263 drives six channels of up to ten WLEDs per channel. Each channel is matched in current to within ±3% for constant brightness across the screen and can be programmed from 15mA to 30mA. The MIC3263 provides a very flexible dimming control scheme with better accuracy and noise immunity.	Click Here

<< BACK to BLOCK DIAGRAM

Capacitive Touch Solutions

- **Function: Adds touch input functionality**

Popular Products	Description	Product Web Page
maxTouch® Touchscreen Controllers	The maXTouch touch controller family provides a leading projected capacitive technology for touchscreens and touch pads. It supports single-finger, multi-fingers and gloved-finger operation. Regardless of the operating environment—hot or cold, dry or wet, noisy power supply or strong radiating surrounding devices—maXTouch controllers are designed for robust and reliable operation without compromising touch performance.	Click Here

<< BACK to BLOCK DIAGRAM

Bluetooth

- **Function: Low power wireless connectivity**

Popular Products	Description	Product Web Page
ATSAMB11	The ATSAMB11 is an ultra-low power Bluetooth® SMART (BLE 4.1) System on a Chip with Integrated MCU, Transceiver, Modem, MAC, PA, TR Switch, and Power Management Unit (PMU). It is a standalone ARM® Cortex®-M0 applications processor with embedded Flash memory and BLE connectivity.	Click Here

<< BACK to BLOCK DIAGRAM

Notebook Computing
Main board

<< BACK to CONTENTS
NEXT

Notebook Computing Main board

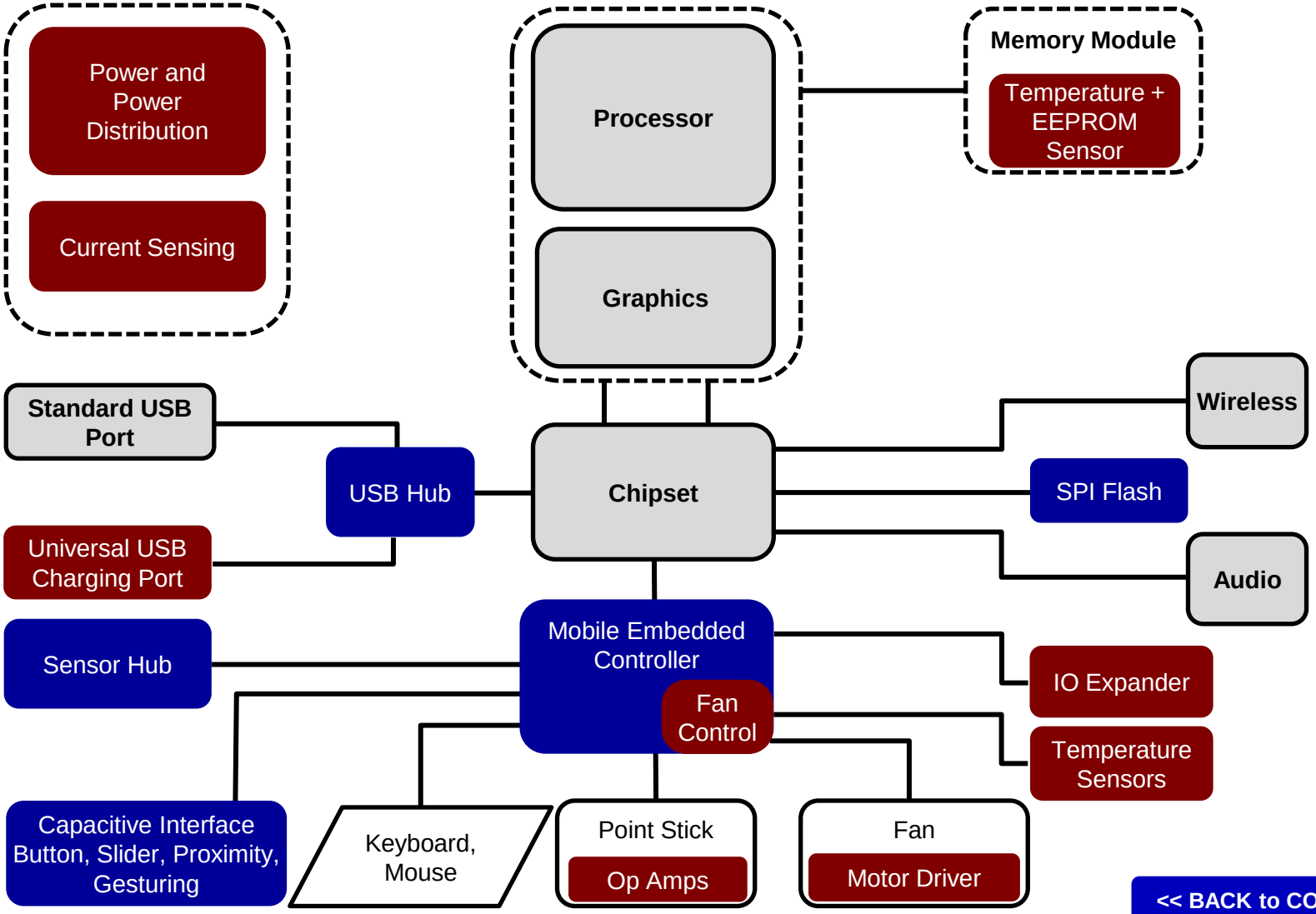

<< BACK to CONTENTS

Temperature Sensor

Function	Popular Products	Description	Product Web Page
Temperature Sensor	EMC141x	1°C Multi-Remote Temperature Sensors with Automatic Beta Compensation (3.3V SMBus) These sensors can monitor temperature up to 8 inches (24cm) away from the IC	Click Here
Temperature Sensor	EMC118x	1°C Multi-Remote Temperature Sensors with Automatic Beta Compensation (1.8V SMBus) These sensors can monitor temperature up to 8 inches (24cm) away from the IC	Click Here

<< BACK to BLOCK DIAGRAM

Fan Control

While some systems control fans from the embedded controller, other systems use stand-alone fan controller such as these.

Function	Popular Products	Description	Product Web Page
Fan Controller	EMC2103-1	The EMC2103-1 is a complete system thermal management system. It contains a single closed loop PWM fan driver with tachometer input, 2 temperature monitors, a shutdown and alert output, and an 8 entry fan speed look up table.	Click Here
Fan Controller	EMC2113	The EMC2113 is a complete system thermal management system. It contains a single closed loop PWM fan driver with tachometer input, 4 temperature monitors, a shutdown and alert output, and an 8 entry fan speed look up table.	Click Here

<< BACK to BLOCK DIAGRAM

Temperature Sensor with EEPROM for SPD

JEDEC DIMM module specifications have defined temperature sensors with EEPROM. The devices below can be used for this purpose or for data logging

Function	Popular Products	Description	Product Web Page
Temperature Sensor with EEPROM	MCP98243	The MCP98243 meets JEDEC's JC42.4-TSE2002B3 with 2K bit serial EEPROM. Along with a wide operating voltage range of 1.8V - 5.5V, this device meets class B accuracy with ±0.2°C/±1°C (typ./max.) from +75°C to +95°C	Click Here
Temperature Sensor with EEPROM	MCP98244	The MCP98244 meets JC42.4-TSE2004B1 with 4K bit serial EEPROM. Along with a wide operating voltage range of 1.8V -5.5V, this device meets class B accuracy with ±0.2°C/±1°C (typ./max.) from +75°C to +95°C	Click Here

<< BACK to BLOCK DIAGRAM

Universal USB Charging Port

USB charging is becoming more complicated as it becomes more ubiquitous. The device below can be uniquely configure for a discovery phase for new products, measure current, and be implemented in a system to allow for charging profile updates

Function	Popular Products	Description	Product Web Page
USB Port Power Controller	UCS1003	This USB port power controller turns USB ports into universal charging ports. The UCS1003 uniquely combines a power switch and high speed switch with programmability and current measurement. Using the 9 built-in charging profiles and 1 programmable profile, a system designer can create an updateable USB charging port for new products yet to come. The current measurement function can be used to search for the highest charging current on unknown devices.	Click Here

<< BACK to BLOCK DIAGRAM

Op Amps

Point sticks on notebooks send analog signals through mulitiple Op Amps for signal conditioning before the signal reaches a controller. The devices below have been used for this function

Function	Popular Products	Description	Product Web Page
Op Amp for point stick or joy stick	MCP6L4T-E/ST	The MCP6L4 quad operational amplifier (op amp) has a gain bandwidth product of 2.8 MHz with low typical operating current of 200 µA. This device has a low input offset voltage of 3 mV.	Click Here
Op Amp for point stick or joy stick	MCP6L2T-E/MS	The MCP6L2 dual operational amplifier (op amp) has a gain bandwidth product of 2.8 MHz with low typical operating current of 200 µA. This device has a low input offset voltage of 3 mV.	Click Here

<< BACK to BLOCK DIAGRAM

IO Expanders

IO Expanders are often used to insert additional functionality laptops that have an additional function version of a base model

Function	Popular Products	Description	Product Web Page
IO Expander	MCP23017-E/ML	This is a 16-bit I/O port consisting of two 8-bit ports. The system master can enable the I/Os as either inputs or outputs over the I^2C. The data for each input or output is kept in the corresponding input or output register. All data is readable over the I^2C with 2 configurable interrupts to limit the need for polling registers.	Click Here
IO Expander	ECE1088 ECE1099 ECE1105	ECE1088 has 20 GPIOs ECE1099 has 32 GPIOs and 23:8 keyscan ECE1105 has 40 GPIOs, 23:8 keyscan, & 2 PS/2	Click Here

<< BACK to BLOCK DIAGRAM

Current Sensing

Current is normally measured using one of two types of devices. First is via an inexpensive op amp with a feedback loop configured for the sense resistor and range possible currents. Second is with a high-side current sensor. Microchip offers this second type of device with an SMBus/I2C interface.

Function	Popular Products	Description	Product Web Page
Op Amps for Current Sensing	MCP6021/3 MCP6291/3	Theses op amps have a gain bandwidth of 10 MHz with a low typical operating current of 1mA and an offset voltage that is less than 150 µV	MCP602x MCP629x
High Side Current Sensing	EMC170x PAC1710 PAC1720 PAC1921	Exceptionally well-qualified for the task of measuring dynamic power Longer Sampling Intervals than the industry norm Sensors excel at collecting and reporting all available data Sensors also include alert outputs to safe guard systems from out of limit and transient events	Parametric Table

<< BACK to BLOCK DIAGRAM

Motor Driver

Function	Popular Products	Description	Product Web Page
Motor Driver	MTD6505	The MTD6505 is a 3-phase full-wave sensorless driver for brushless DC (BLDC) motors. It features 180° sinusoidal drive, high torque output and silent drive. With the adaptive features, parameters and wide range of power-supplies (2V to 5.5V), the MTD6505 is intended to cover a broad range of motor characteristics, while requiring minimum external components. Speed control can be achieved through either power supply modulation (PSM) or pulse-width modulation (PWM). The frequency generator (FG) output enables precision speed control in closed-loop applications. The MTD6505 device includes Lockup Protection mode to turn off the output current when the motor is in a lock condition, with an automatic recovery feature.	Click Here

<< BACK to BLOCK DIAGRAM

Mobile Embedded Controllers

Function	Popular Products	Description	Product Web Page
Mobile Embedded Controller	MEC1308	8-bit embedded controller with 64k bytes SRAM, 2 SMBus, 4 PWMs, 2 tachs, 1 serial, ADC, 55 GPIOs, RC-6, 1SMSC BC-Link, 4 PS/2, SPI Flash Memory interface	Click Here
Mobile Embedded Controller	MEC1312	8-bit embedded controller with 96k bytes SRAM,3 SMBus, PECI, 4 PWMs, 2 tachs, 1 serial, ADC,63 GPIOs, 1SMS CBC-Link, 4 PS/2, SPI Flash Memory interface	Click Here
Mobile Embedded Controller	MEC1620	32-bit embedded controller with 192k bytes of embedded flash, 1k bytes EEPROM, 16k bytes SRAM, 16 ADC, connected standby, 3 SMBus, 2 SPI, 16 PWM, 6 tachs, 1 serial, HDMI-CEC, 153 GPIOs	Click Here

<< BACK to BLOCK DIAGRAM

Sensor Hub

Function	Popular Products	Description	Product Web Page
Sensor Hub	SSC7102	The SSC7102 sensor fusion hub is a Windows 8.1 certified, HID over I^2C, low-power, flexible, turnkey solution. SSC7102 makes implementing sensor fusion easy for ultrabooks, tablets, and smartphones. Microchip partnered with multiple industry-leading sensor manufacturers and sensor-fusion specialists to create this solution, enabling faster time to market without the need for sensor-fusion expertise. The SSC7102 consumes only ~4mA while running complex sensor-fusion algorithms, resulting in longer battery life for Windows 8.1 tablet, laptop, ultrabook, and smart phone applications.	Click Here

<< BACK to BLOCK DIAGRAM

USB 2.0 and 3.0 Hubs

Function	Popular Products	Description	Product Web Page
USB 3.0 Hub	USB553xB	These are 2/3/4/7-porthub controllers are SuperSpeed /Hi-Speed, configurable and compliant with USB 3.0. USB 3.0 traffic can also operate in parallel with a USB 2.0 traffic without being not affected by slower data.	Click Here
USB 2.0 Hub	USB251xB	These 2/3/4 port USB 2.0 hub controllers excel at data throughput in mixed-speed USB environments. Programmable features include PortMap, PortSwap, and PHYBoost to simplify PCB layout & optimize BOM cost.	Click Here
USB 2.0 Hub	USB2534	This 4 port hub is compliant with the USB 2.0 and Link Power Management. It provides an additional USB endpoint for use as a USB to I2C interface, allowing external devices to be monitored, controlled, or configured via USB.	Click Here
USB2.0 or HSIC	USB4604	This is an OEM configurable USB 2.0 hub controller with 4 downstream ports. It is compliant with the USB 2.0, USB 2.0 Link Power Management & High-Speed Inter-Chip	Click Here

<< BACK to BLOCK DIAGRAM

Capacitive Sensing and Gesturing

Function	Popular Products	Description	Product Web Page
Proximity, Buttons, and Sliders	Various	Microchip offers both turnkey products for a no code development plug-and-play solution, as well as a proven robust firmware solution that leverage our vast PIC microcontroller portfolio. Our broad range of solutions include high sensitivity proximity detection, keys, sliders, Metal-over-Capacitive (MoC) touch sensing and more	Click Here
Gesturing	Various	Microchip's patented GestIC technology unleashes the 3rd dimension for the realization of revolutionary new User Interfaces. Our E-field sensing technology detects the proximity of a human hand and gives accurate X-Y-Z coordinates and recognized 3D gestures.	Click Here

<< BACK to BLOCK DIAGRAM

SPI Flash

Function	Popular Products	Description	Product Web Page
SPI Flash	Various	Microchip's Serial Quad Interface (SQI™) and SPI flash memories are manufactured with our proprietary, high performance CMOS SuperFlash® Technology, significantly improving performance (erase any block in less than 25ms) and reliability (100 years data retention) while lowering power consumption. • 512Kb-64Mb in 3V and multiple densities in 1.8V • SQI™ flash – Up to 104MHz and includes advanced security features	Click Here

<< BACK to BLOCK DIAGRAM

Servers
Main board

<< BACK to CONTENTS
NEXT

Servers

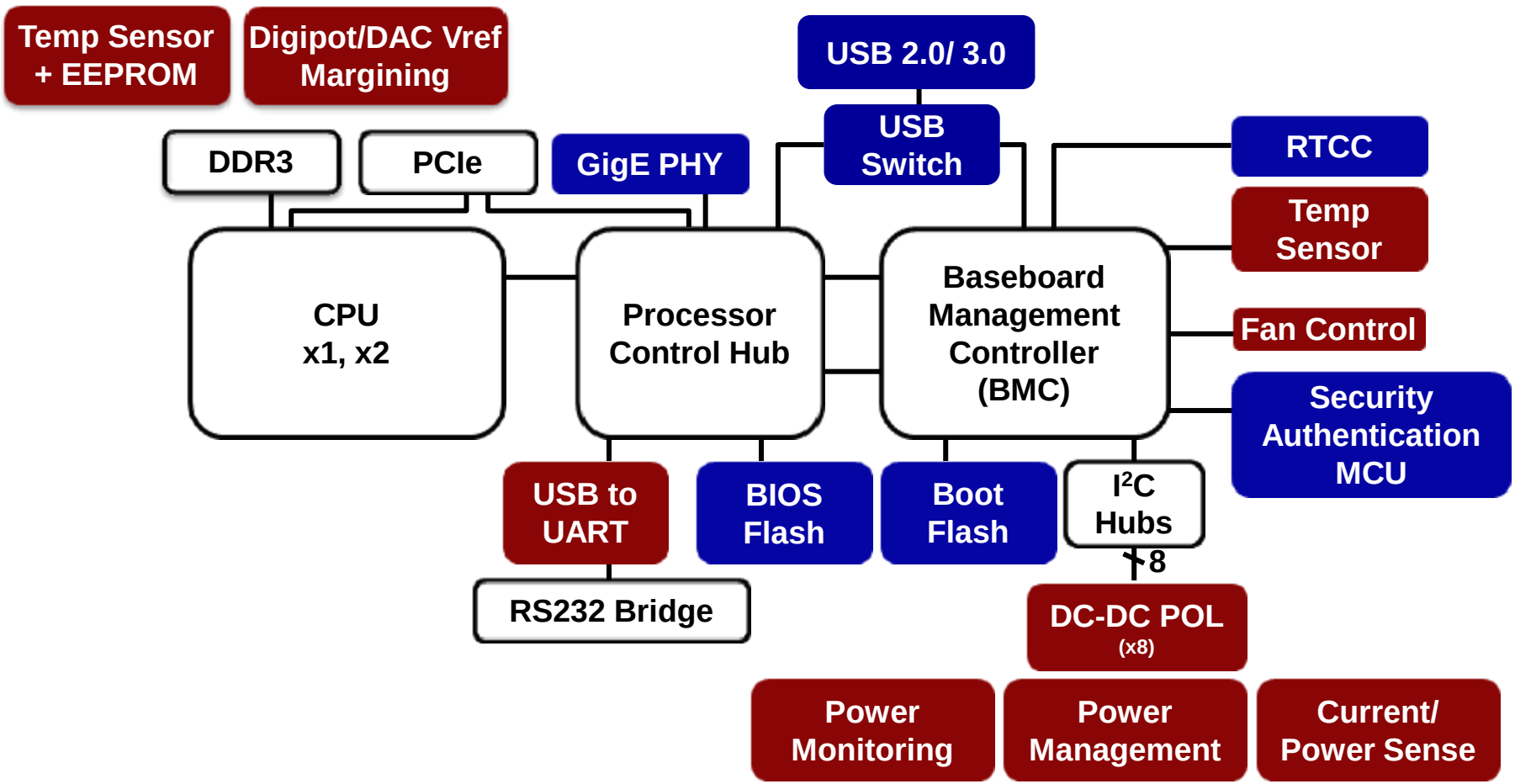

<< BACK to CONTENTS

Temperature Sensor

Popular Products	Description	Product Web Page
EMC141x	1°C Multi-Remote Temperature Sensors with Automatic Beta Compensation (3.3V SMBus) These sensors can monitor temperature up to 8 inches (24cm) away from the IC	Click Here
EMC1428	The EMC1428 is a high accuracy, low cost, System Management Bus (SMBus) temperature sensor. Each device provides ±1° accuracy for external diode temperatures and ±2°C accuracy for the internal diode temperature. The EMC1428 monitors up to eight temperature channels (up to seven external and one internal).	Click Here

<< BACK to BLOCK DIAGRAM

Fan Control

While some systems control fans from the embedded controller, other systems use stand-alone fan controller such as these.

Popular Products	Description	Product Web Page
EMC230x	The EMC230x is an SMBus compliant fan controller with up to five independently controlled PWM fan drivers. Each fan driver is controlled by a programmable frequency PWM driver and Fan Speed Control algorithm that operates in either a closed loop fashion or as a directly PWM-controlled device. The closed loop Fan Speed Control algorithm (FSC) has the capability to detect aging fans and alert the system. It will likewise detect stalled or locked fans and trigger an interrupt. Additionally, the EMC230x offers a clock output so that multiple devices may be chained and slaved to the same clock source for optimal performance in large distributed systems.	Click Here

<< BACK to BLOCK DIAGRAM

Current Sensor

Popular Products	Description	Product Web Page
PAC1710	The PAC1710 is a high-side bi-directional current sensing monitor with precision voltage measurement capabilities. The power monitor measures the voltage developed across an external sense resistor to represent the high-side current of a battery or voltage regulator.	Click Here
PAC1720	The PAC1720 is a dual high-side bi-directional current sensing monitor with precision voltage measurement capabilities. Each sensor measures the voltage developed across an external sense resistor to represent the high-side current of a battery or voltage regulator.	Click Here
PAC1921	The PAC1921 is a dedicated power-monitoring device with a configurable analog output that can present power, current or voltage. The PAC1921 is designed for power measurement and diagnostic systems that cannot allow for latency when performing high-speed power management.	Click Here

<< BACK to BLOCK DIAGRAM

Temperature Sensor with EEPROM

JEDEC DIMM module specifications have defined temperature sensors with EEPROM. The devices below can be used for this purpose or for data logging

Function	Popular Products	Description	Product Web Page
Temperature Sensor with EEPROM	MCP98243	The MCP98243 meets JEDEC's JC42.4-TSE2002B3 with 2K bit serial EEPROM. Along with a wide operating voltage range of 1.8V - 5.5V, this device meets class B accuracy with ±0.2°C/±1°C (typ./max.) from +75°C to +95°C	Click Here
Temperature Sensor with EEPROM	MCP98244	The MCP98244 meets JC42.4-TSE2004B1 with 4K bit serial EEPROM. Along with a wide operating voltage range of 1.8V -5.5V, this device meets class B accuracy with ±0.2°C/±1°C (typ./max.) from +75°C to +95°C	Click Here

<< BACK to BLOCK DIAGRAM

Digital Potentiometers/ DAC

Function	Popular Products	Description	Product Web Page
DAC	MCP47DA1	The MCP47DA1 devices are volatile, 6-Bit digital Digital-to-Analog converter(DAC)with a windowed output for server voltage margining applications. The MCP47DA1 has a windowed output (1/3 to 2/3 of VREF). The DAC setting is controlled through an I2C™Compatible serial interface. The I2C™Compatible slave addresses of “010 1110” and “011 1110” are supported.	Click Here
Digital Potentiometer	MCP40D18	The MCP40D17/8/9 devices offer a wide range of product offerings using an I2C™Compatible interface. This family of devices support a 7-bit resistor network, volatile memory configuration, and potentiometer and rheostat pinouts. This device family is offered in miniature 5 and 6 lead SC-70 packaging.	Click Here

<< BACK to BLOCK DIAGRAM

USB to UART

Popular Products	Description	Product Web Page
MCP2200	The MCP2200 is a USB-to-UART serial converter which enables USB connectivity in application that have a UART interface. The device reduces external components by integrating the USB termination resistors. The MCP2200 also has 256-bytes of integrated user EEPROM. The MCP2200 has eight general purpose input / output pins. Four of the pins have alternate functions to indicate USB and communication status.	Click Here

<< BACK to BLOCK DIAGRAM

USB Hubs

Function	Popular Products	Description	Product Web Page
USB 3.0 Hub	USB553xB	These are 2/3/4/7-porthub controllers are SuperSpeed /Hi-Speed, configurable and compliant with USB 3.0. USB 3.0 traffic can also operate in parallel with a USB 2.0 traffic without being not affected by slower data.	Click Here
USB 2.0 Hub	USB251xB	These 2/3/4 port USB 2.0 hub controllers excel at data throughput in mixed-speed USB environments. Programmable features include PortMap, PortSwap, and PHYBoost to simplify PCB layout & optimize BOM cost.	Click Here
USB 2.0 Hub	USB2534	This 4 port hub is compliant with the USB 2.0 and Link Power Management. It provides an additional USB endpoint for use as a USB to I2C interface, allowing external devices to be monitored, controlled, or configured via USB.	Click Here
USB2.0 or HSIC	USB4604	This is an OEM configurable USB 2.0 hub controller with 4 downstream ports. It is compliant with the USB 2.0, USB 2.0 Link Power Management & High-Speed Inter-Chip	Click Here

<< BACK to BLOCK DIAGRAM

USB3740

Features:

- High-bandwidth USB 2.0 Switch with Dual Enables
  - For high-speed USB 2.0 data
- Multiplex differential outputs from a USB host device to one of two corresponding outputs
  - Enable DP/DM multiplexing
  - Flexible solution for embedded applications
- Ultra-low Current Consumption
  - Active (switch ON) = 5 uA (Vcc = 3V)
  - Standby (switch OFF) = 0.01 uA (Vcc = 3V)
- Competitive USB 2.0 Switch Specifications
  - Designed to pass USB signals from 0 to 3.3V
  - USB Mux on resistance < 6 ohms
  - USB Mux off leakage < 0.5 uA
  - Off isolation < -40 dB
  - On capacitance < 6 pF
  - High bandwidth: 1 GHz
- Extreme ESD Protection ± 15 kV (IEC)
- Package:
  - 10-lead 1.3 mm x 1.8 mm QFN with 0.4 mm pitch
  - 10-lead 1.6 mm x 2.1 mm QFN with 0.5 mm pitch

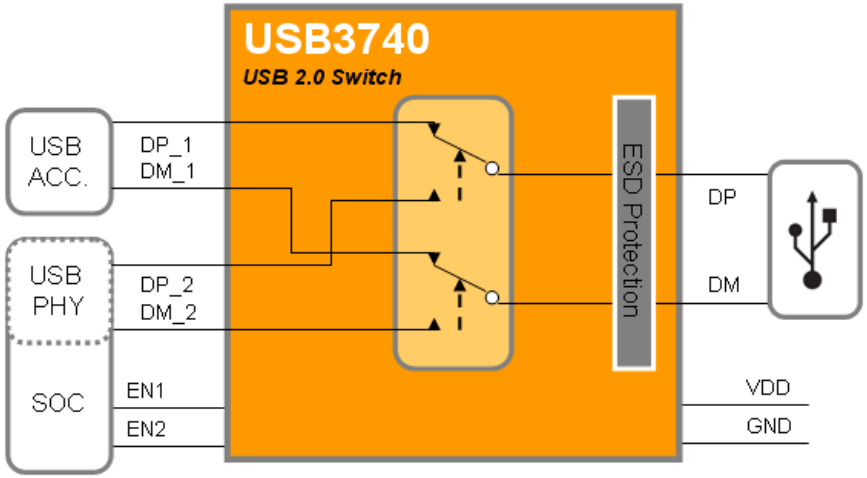

<< BACK to BLOCK DIAGRAM

Gigabit Ethernet

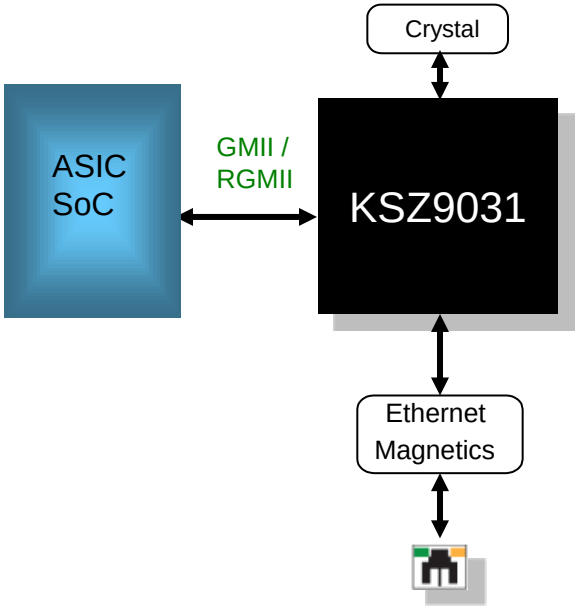

KSZ9031 Features

- Small Footprint, Low Power
- Auto-MDIX support with IEEE 802.3 specs at 10/100/1000 Mbps operation
- Supports CAT-5 unshielded twisted pair (UTP)
- On-chip termination resistors
- Flexible configurations for LED status indicators
- Features Energy Efficient Ethernet (802.3az)
- Wake on LAN support (WOL)
- Link status change and wake-up detection
- Lead free ROHS compliant packages:
  - KSZ9031RNX: 48QFN 7x7mm (RGMII)
  - KSZ9031MNX: 64QFN 8x8mm (GMII)
- Temperature Range:
  - Commercial 0°C to +70°C
  - Industrial -40°C to +85°C
  - Automotive -40°C to +105°C

<< BACK to BLOCK DIAGRAM

PIC24F128GB204 Product Family with Security

- **What's new:**
  - AES / DES HW encryption
  - OTP key storage
  - Random Number Generator
  - UART with ISO7816
- **Highlights**
  - 64 to128KB Flash
  - 8KB RAM
  - 28 to 44pins
  - XLP low power with Vbat
- **Peripherals**
  - USB OTG
  - 4 UARTs w/ ISO7816
  - 3 SPI w/ I^2S, 2 I^2C™
  - 12-bit ADC, 12ch
  - CTMU
  - 5 16-bit Timer
  - 6 IC, 6 OC

<< BACK to BLOCK DIAGRAM

RTCC

Popular Products	Description	Product Web Page
MCP79410	The MCP79410 general purpose I2C™Compatible real-time clock/calendar (RTCC) is highly integrated with nonvolatile memory and advanced features normally found in higher priced devices. These features include a battery switchover circuit for backup power, a timestamp to log power failures and digital trimming for accuracy. In addition, non-volatile memory is included along with a Unique ID in a locked section of EEPROM that can be unlocked and programmed by the End User.	Click Here

<< BACK to BLOCK DIAGRAM

BIOS and BOOT Flash

Popular Products	Description	Product Web Page
SST26VF032B	The SST26VF032B/032BA Serial Quad I/O (SQI) flash device utilizes a 4-bit multiplexed I/O serial interface to boost performance while maintaining the compact form factor of standard serial flash devices. SST26VF032B/032BA also support full command-set compatibility to traditional Serial Peripheral Interface (SPI) protocol. Operating at frequencies reaching 104 MHz, the SST26VF032B/032BA enables minimum latency execute-in-place (XIP) capability without the need for code shadowing on an SRAM. The device's high performance and reliability make it the ideal choice for Network Appliance, DSL and Cable Modems, Wireless Lan, Computing, Digital TV, Smart Meter, Server, Set Top Box, Automotive and other Industrial applications.	Click Here

<< BACK to BLOCK DIAGRAM

Power Monitoring

<< BACK to CONTENTS
NEXT

Power Monitoring

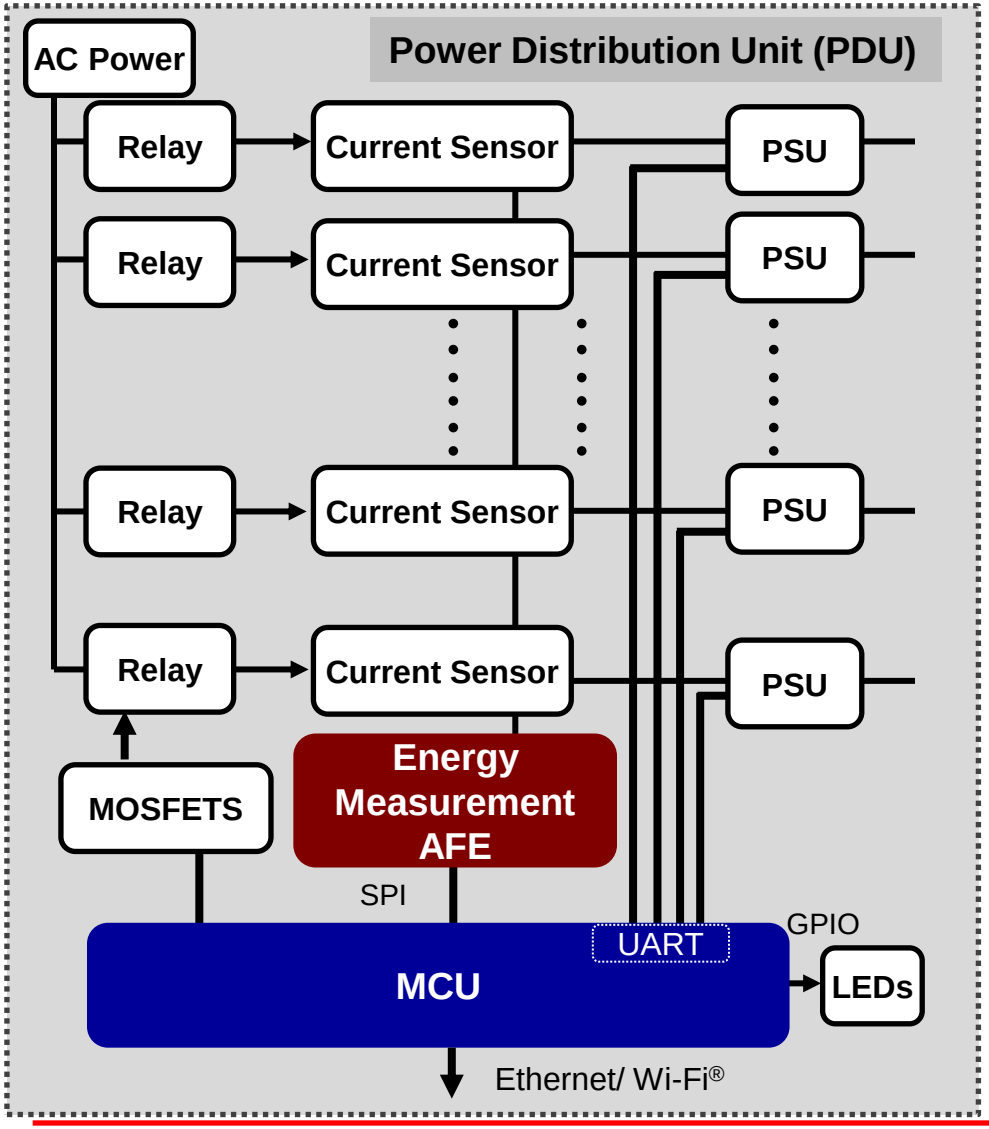

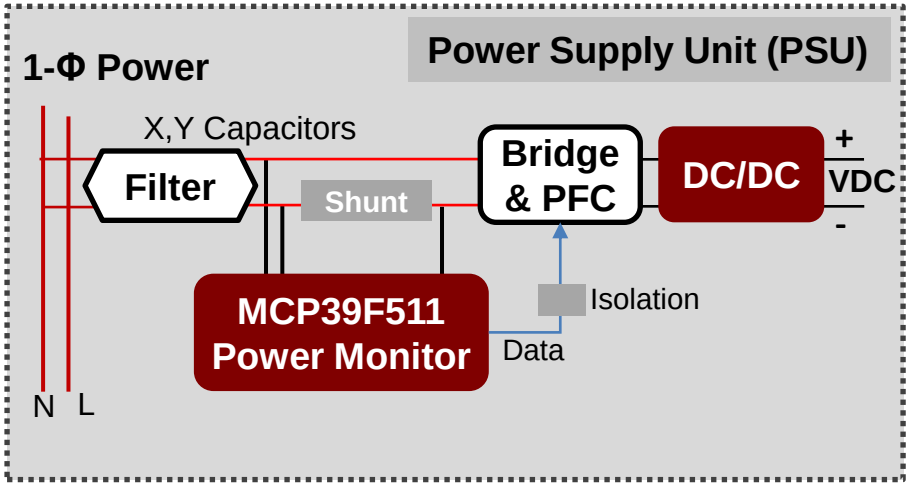

<< BACK to Servers

<< BACK to CONTENTS

MCP39F511

Popular Products	Description	Product Web Page
MCP39F511	The MCP39F511 is a highly integrated, single-phase power-monitoring IC designed for real-time measurement of input power for AC/DC power supplies, providing power and energy values, as well as zero-crossing and event monitoring. It includes dual-channel delta sigma ADCs, a 16-bit calculation engine, EEPROM and a flexible 2-wire interface. An integrated low-drift voltage reference in addition to the 94.5 dB of SINAD performance on each measurement channel allows for better than 0.1% accurate designs across a 4000:1 dynamic range.	Click Here

<< BACK to BLOCK DIAGRAM

MCP3913/4

Popular Products	Description	Product Web Page
MCP3913/14	The MCP3913/4 device is a 6 and 8-Ch Analog Front End (AFE), containing six synchronous sampling delta-sigma ADCs, six PGAs, phase delay compensation block, low-drift internal voltage reference, digital offset and gain error calibration registers, and high-speed 20 MHz SPI compatible serial interface. The MCP3913/4 AFEs include advanced security features to secure the communications and the configuration settings, such as a CRC-16 checksum on both serial data outputs and static register map configuration. It also includes a register-map lock through an 8-bit secure key to stop unwanted write commands from processing. The MCP3913/14 AFEs are capable of interfacing with a variety of voltage and current sensors, including shunts, current transformers, Rogowski coils and Hall-effect sensors.	Click Here

<< BACK to BLOCK DIAGRAM

Microcontroller

Popular Products	Description	Product Web Page
PIC32MX	32-bit Microcontrollers (up to 512 KB Flash and 128 KB SRAM) with Graphics Interface, USB, CAN, and Ethernet.	Click Here
PIC24F	The PIC24F microcontroller family features cost effective, 16 MIPS 16-bit MCU performance and many devices with Microchip's eXtreme Low Power Technology. Unique features include USB-OTG, to act as a USB Device or Host, a Charge Time Measurement Unit (CTMU) that allows precision time measurement, capacitive measurement for mTouch™ applications and an integrated graphics or segmented display controller. The PIC24 Lite family (PIC24FxxKxxx) features lowest cost and lowest power in small pin count options, with integrated EEPROM, Op Amps, DACs, flexible PWMs and Configurable Logic Cell (CLC) for real time logic control.	Click Here

<< BACK to BLOCK DIAGRAM

Ethernet Switch

<< BACK to CONTENTS
NEXT

Ethernet Switch

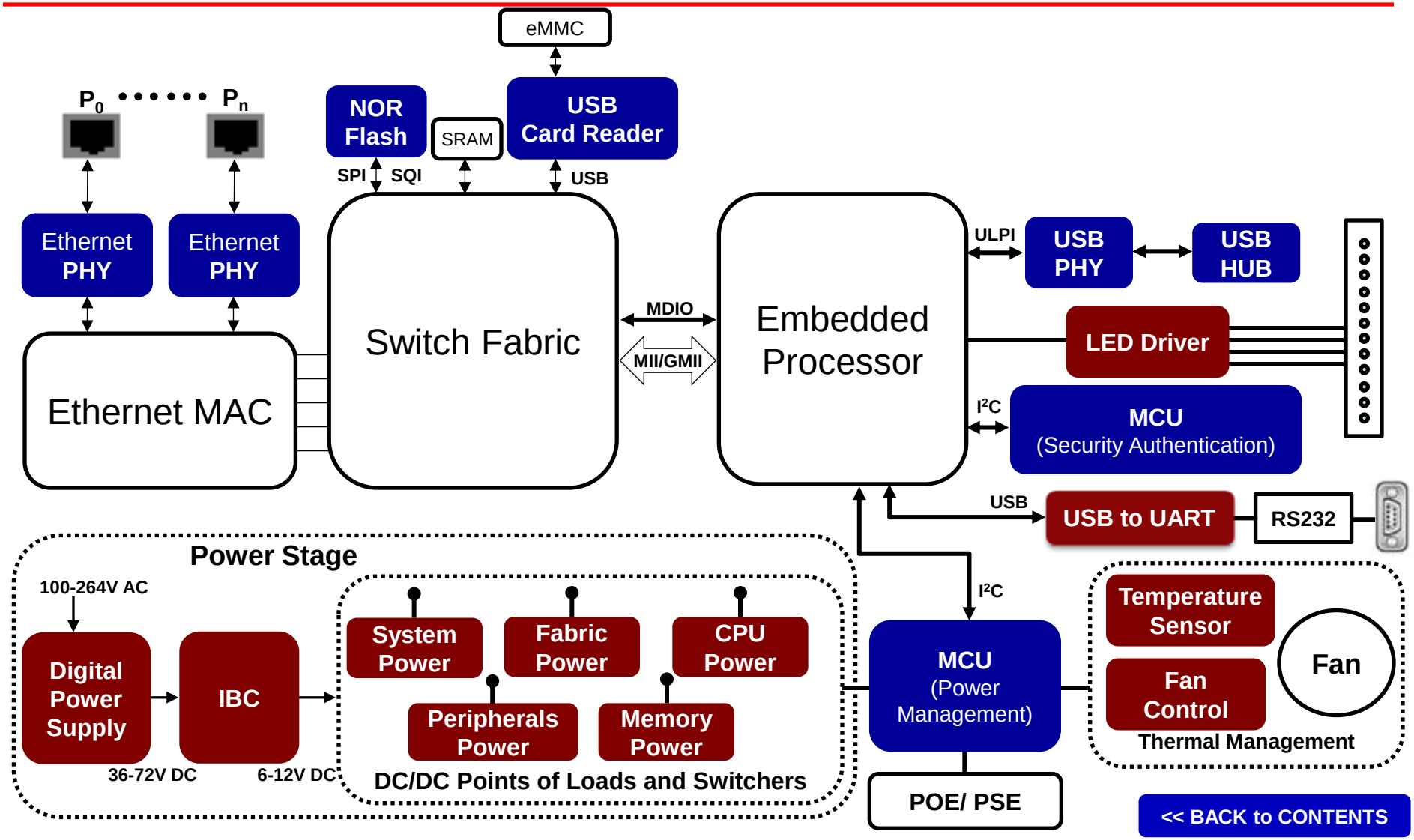

Power Stage (Ethernet Switch)

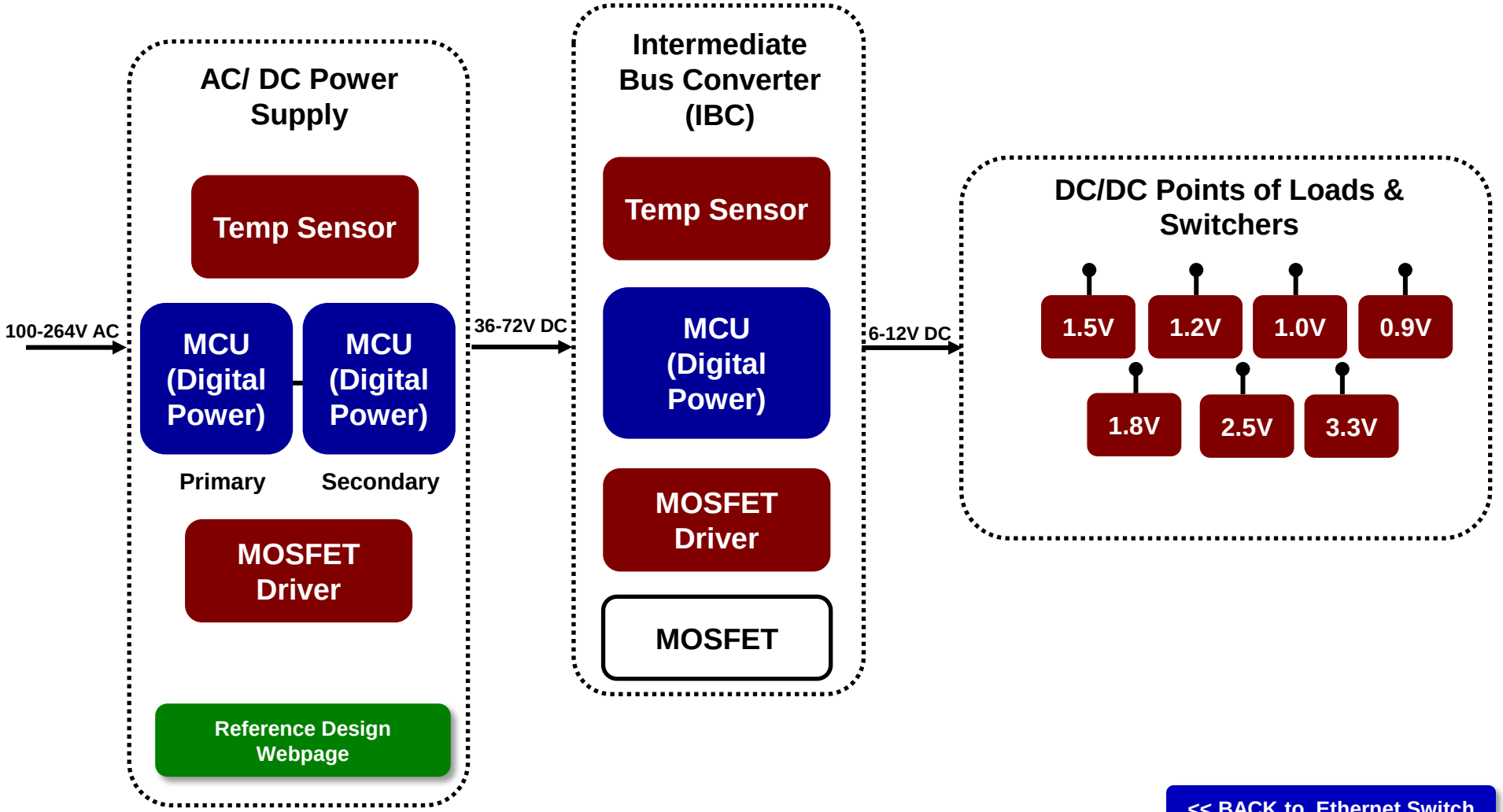

<< BACK to Ethernet Switch

720W AC/DC Power Supply Reference Design

High-Level Block Diagram

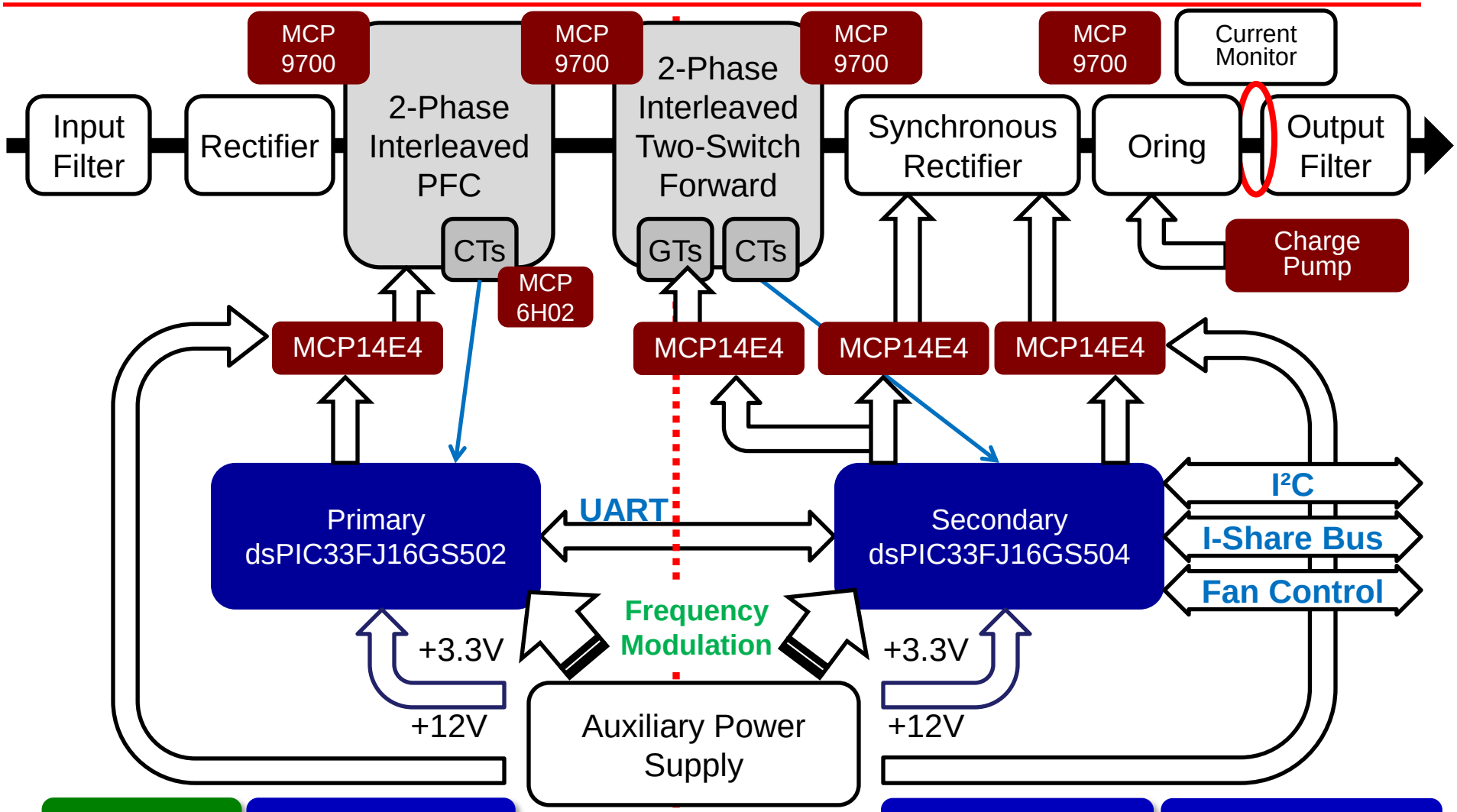

Reference Design Webpage

PIC® MCU Compatible MOSFET Drivers

<< BACK to Ethernet Switch Power Stage

<< BACK to Main End Equipment Page

USB 2.0 and 3.0 Hubs

Function	Popular Products	Description	Product Web Page
USB 3.0 Hub	USB553xB	These are 2/3/4/7-porthub controllers are SuperSpeed /Hi-Speed, configurable and compliant with USB 3.0. USB 3.0 traffic can also operate in parallel with a USB 2.0 traffic without being not affected by slower data.	Click Here
USB 2.0 Hub	USB251xB	These 2/3/4 port USB 2.0 hub controllers excel at data throughput in mixed-speed USB environments. Programmable features include PortMap, PortSwap, and PHYBoost to simplify PCB layout & optimize BOM cost.	Click Here
USB 2.0 Hub	USB2534	This 4 port hub is compliant with the USB 2.0 and Link Power Management. It provides an additional USB endpoint for use as a USB to I2C interface, allowing external devices to be monitored, controlled, or configured via USB.	Click Here
USB2.0 or HSIC	USB4604	This is an OEM configurable USB 2.0 hub controller with 4 downstream ports. It is compliant with the USB 2.0, USB 2.0 Link Power Management & High-Speed Inter-Chip	Click Here

<< BACK to BLOCK DIAGRAM

USB-to-UART/SPI

- **Function: Enables USB connectivity in applications that have UART/SPI interface**

Popular Products	Description	Product Web Page
MCP2200	The MCP2200 is a USB-to-UART serial converter. The device reduces external components by integrating the USB termination resistors. The MCP2200 also has 256-bytes of integrated user EEPROM. The MCP2200 has eight general purpose input / output pins. Four of the pins have alternate functions to indicate USB and communication status.	Click Here
MCP2210	The MCP2210 is a USB-to-SPI Master converter. The device reduces external components by integrating the USB termination resistors. The MCP2210 also has 256 bytes of integrated user EEPROM. The MCP2210 has nine general purpose input/output pins. Seven pins have alternate functions to indicate USB and communication status.	Click Here

<< BACK to BLOCK DIAGRAM

USB Transceiver Product Overview

USB PHY Products	USB3450	USB3500	USB3280 USB3290	USB3300	USB334x	USB333x
PHY Interface	UTMI+ (Device or Host)	UTMI+ (Device, Host, or OTG)	UTMI (Device)	ULPI (Device, Host, or OTG)	ULPI (Device, Host, or OTG)	ULPI (Device, Host, or OTG)
HS & FS USB	Yes	Yes	Yes	Yes	Yes	Yes
LS USB	Yes	Yes	No	Yes	Yes	Yes
Data Interface	8 bit Bidir	8 bit Bidir	8 bit Bidir	8 bit Bidir	8 bit Bidir	8 bit Bidir
Internal Reg	Yes	Yes	Yes	Yes	Yes	Yes
Package Body size (mm)	40 QFN (6x 6 x 0.9)	56 QFN (8 x 8 x 0.9)	36 QFN (6 x 6 x 0.9) 40 VFBGA (4 x 4 x 0.9)	32 QFN (5 x 5 x 0.9)	24 QFN (4 x 4 x 0.9) 25 BGA (3 x 3 x 0.8)	25 WLCSP (1.9 x 1.9 x 0.5)

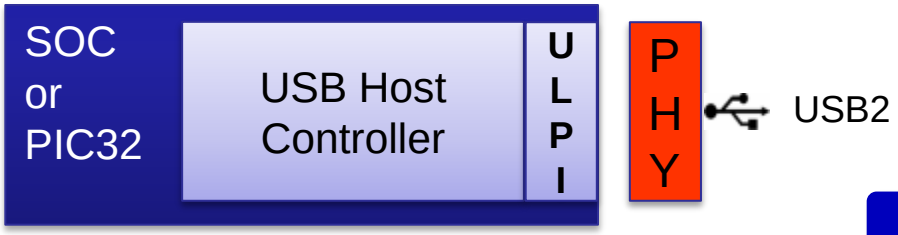

<< BACK to BLOCK DIAGRAM

USB Flash Media Controller Overview

USB Card Reader Products	USB2244	USB2250	USB2640	USB2660	USB4640
Up Stream Interface	USB 2.0	USB 2.0	USB 2.0	USB 2.0	HSIC (USB 2.0)
Down Stream Output	SD, MMC	SD, MMC, CF, MS, xD	SD, MMC, MS, xD	2xSD, 2xMMC, MS, xD	SD, MMC, MS, xD
Down Stream USB Ports	None	None	2	2	2
Logical Units	1	1	1	1	1
Package Body size (mm)	36 QFN (6 x 6 x 0.9)	128 VTQDP (14 x 14 x 1.1)	48 QFN (7 x 7 x 0.9)	64 QFN (9 x 9 x 0.9)	48 QFN (7 x 7 x 0.9)

SD – SecureDigital, MMC – MultiMediaCard, CF – Compact Flash, MS – Memory Stick, xD – xD Picture Card

- **Ultra-fast flash media reader/writer for external memory card storage or embedded flash memory**
  - SD, MMC/eMMC, MS / MS-Pro / MS-Pro-HG, xD
- **USB interface for design ease and flexibility on placement**
- **USB port expansion options**

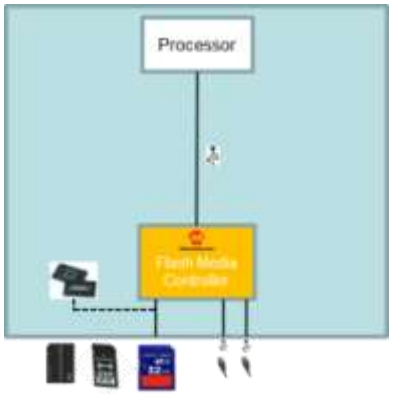

<< BACK to BLOCK DIAGRAM

Ethernet Physical Layer

Popular Products	Description	Product Web Page
LAN8710A/20A	Excellent ESD Protection levels without any external protection devices. Integrated DSP with adaptive equalizer. Integrated 1.2V Linear Regulator. Incorporates SMSC flexPWR. Uses a low cost 25MHz xtal for RMII. Lead free ROHS compliant packages: Commercial (0 to +70C) and Industrial (-40 to +85C) temperature supported	Click Here
LAN8740A/1A/2A	Energy Efficient Ethernet 802.3az, Wake On LAN support (WoL), Cable Diagnostics, HP Auto-MDIX, Compliant with IEEE 802.3/802.3u, Integrated DSP with adaptive equalizer, Integrated 1.2V Linear Regulator, Uses a low cost 25MHz xtal for RMII Lead free ROHS compliant packages	Click Here

<< BACK to BLOCK DIAGRAM

NOR Flash Product Offerings

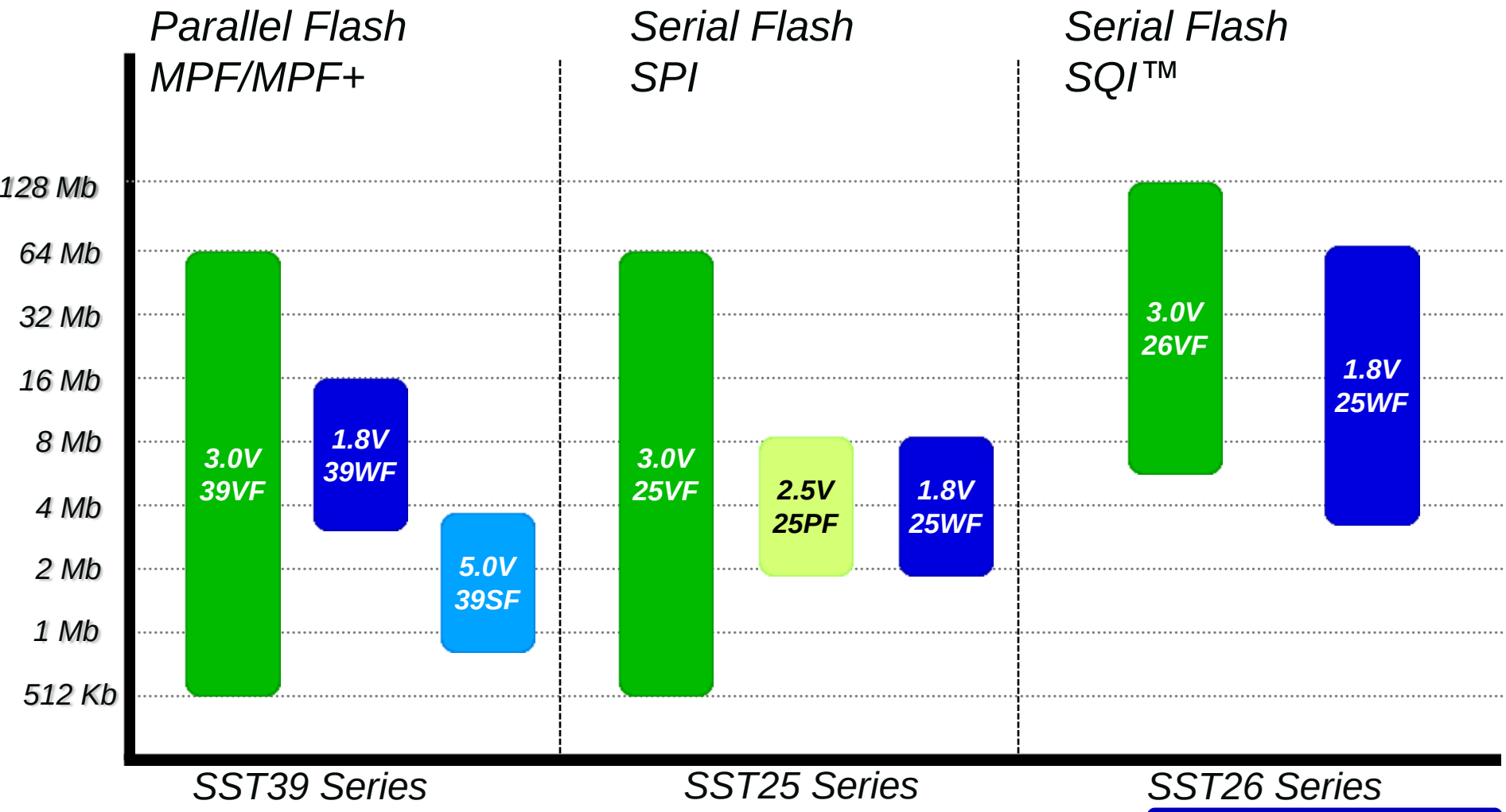

<< BACK to BLOCK DIAGRAM

PIC24F128GB204 Product Family with Security

- **What's new:**
  - AES / DES HW encryption
  - OTP key storage
  - Random Number Generator
  - UART with ISO7816
- **Highlights**
  - 64 to128KB Flash
  - 8KB RAM
  - 28 to 44pins
  - XLP low power with Vbat
- **Peripherals**
  - USB OTG
  - 4 UARTs w/ ISO7816
  - 3 SPI w/ I^2S, 2 I^2C™
  - 12-bit ADC, 12ch
  - CTMU
  - 5 16-bit Timer
  - 6 IC, 6 OC

<< BACK to BLOCK DIAGRAM

Thermal Management

Suggested Products	Description	Product Web page
MCP9700/ MCP9800/	Improves control of color temperature and detects disconnected LED channel. MCP9700 outputs analog voltage that is proportional to the temperature (-40C to 150C). MCP9800 outputs temperature data (-55C to 125C) via I²C™/SMBus two-wire interface.	MCP9700 MCP9800
EMC2301	The EMC2301 is an SMBus compliant fan controller with a PWM fan driver. The fan driver is controlled by a programmable frequency PWM driver and Fan Speed Control algorithm that operates in either a closed loop fashion or as a directly PWM-controlled device and has the capability to detect aging fans and alert the system. It will likewise detect stalled or locked fans and trigger an interrupt.	EMC2301
EMC1412	The EMC1412 is a high accuracy, low cost, System Management Bus (SMBus) temperature sensor. Advanced features such as Resistance Error Correction (REC), Beta Compensation and automatic diode type detection combine to provide a robust solution for complex environmental monitoring applications.	EMC1412

<< BACK to Ethernet Switch
<< BACK to Power Stage

dsPIC33 GS Architecture

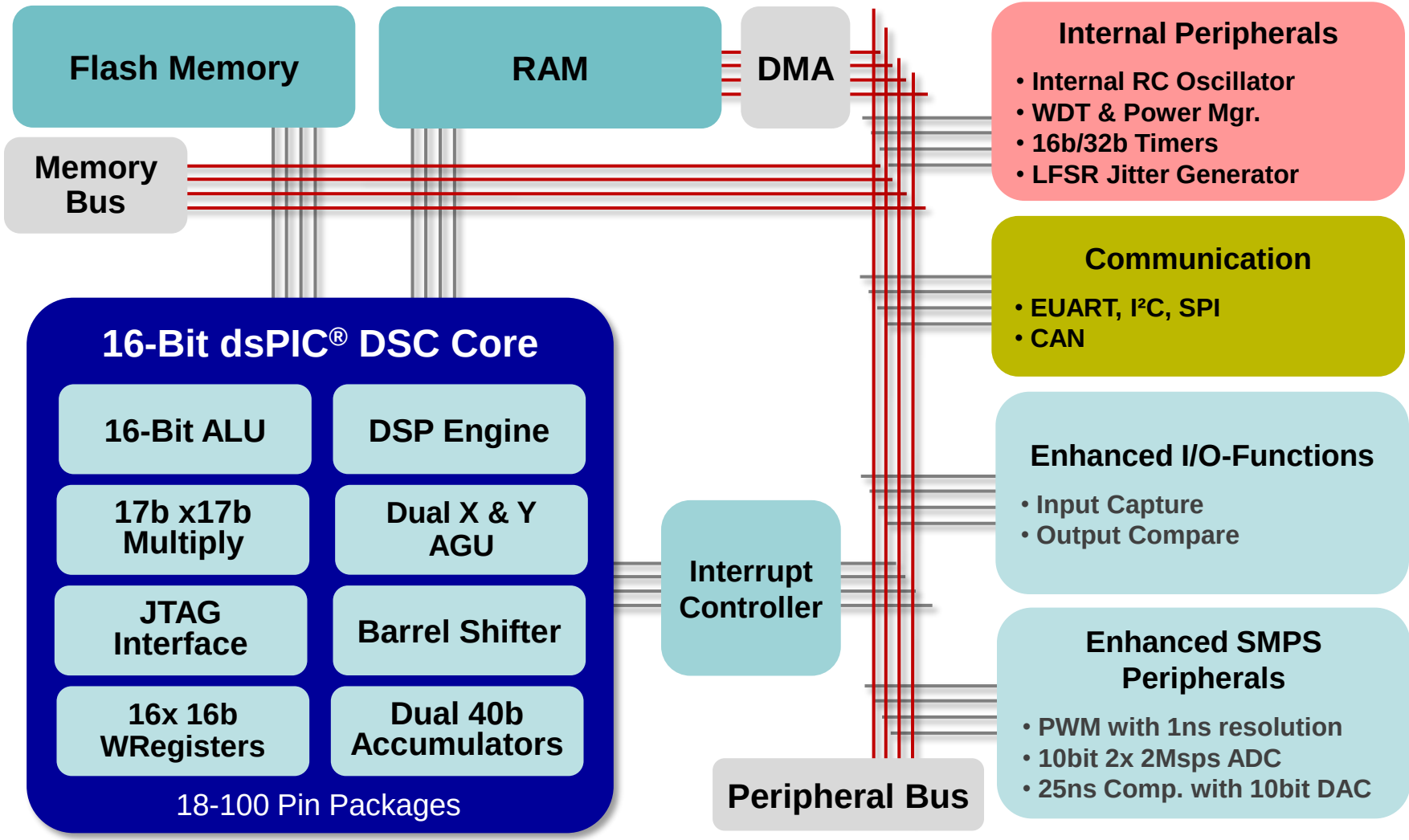

dsPIC® DSC webpage

<< BACK to Ethernet Switch

<< BACK to Power Stage

Operational Amplifiers

Suggested Products	Description	Product Web page
MCP6H02	The MCP6H02 operational amplifier (op amp) has a wide supply voltage range of 3.5V to 16V and rail-to-rail output operation. This device is unity gain stable and has a gain bandwidth product of 1.2 MHz (typical), while only drawing 135 µA/amplifier (typical) of quiescent current. The MCP6H02 family is fully specified from -40°C to +125°C and is available in 8L-SOIC and 8L- 2x3 TDFN	Click Here
MCP6H92	The MCP6H92 operational amplifier (op amp) has a wide supply voltage range of 3.5V to 12V and rail-to-rail output operation. This device is unity gain stable and has a gain bandwidth product of 10 MHz (typical), while only drawing 2 mA/amplifier (typical) of quiescent current. The MCP6H92 is fully specified from -40°C to +125°C and is available in 8L-SOIC and 8L- 2x3 TDFN	Click Here

<< BACK to BLOCK DIAGRAM

MOSFET Drivers

- **Function: driving the high power devices (MOSFETs, bipolar transistors, IGBTs)**

Popular Products	Description	Product Web Page
TC4427A	Supply Voltage Range: 2.5V to 5.5V Wide Temperature Measurement Range: -40°C to +125°C High Temperature Converter Accuracy: ± 2°C, Max, at 25°C Linear Temperature Slope: 10mV/°C Very Low Supply Current: 35µA Typical	Click Here
MCP14A0151/2	The MCP14A0151 and MCP14A0152 are inverting and non-inverting, 1.5 A MOSFET drivers in 2x2 DFN and SOT-23 packages. The small package sizes allow the gate driver to be positioned close to the MOSFET's physical gate connection, which minimizes gate bounce caused by the parasitic effects of PCB layout and reduces EMI. These devices feature a unique architecture with low input thresholds, ideally suited for use with a low-voltage MCU to minimize power losses within the system.	Click Here
MCP14E3/E4/E5	The MCP14E3/E4/E5 devices are a family of 4.5A,dual output buffers/MOSFET drivers with separate enable functions for each output. As MOSFET drivers, the MCP14E3/E4/E5 can easily charge 2200 pF gate capacitance in under 28 ns (max)	Click Here

<< BACK to BLOCK DIAGRAM

Charge Pumps

- **Function: powering white LEDs, providing negative DC bias for LCD or GaAs transmit power amplifier, converting Li-Ion voltage to DC voltage level required by the system**

Popular Products	Description	Product Web Page
MCP1252/3	The MCP1252/3 are inductorless, positive-regulated charge pump DC/DC converters. The devices generate a regulated fixed (3.3V or 5.0V) or adjustable output voltage. They are specifically designed for applications requiring low noise and high efficiency and are able to deliver up to 120 mA output current. The devices allow the input voltage to be lower or higher than the output voltage, by automatically switching between buck/ boost operation.	Click Here

<< BACK to BLOCK DIAGRAM

PIC® MCU Compatible MOSFET Drivers

- **Function: Interfaces low voltage PIC® MCU and dsPIC® DSC devices to high capacitance MOSFETs**

Popular Products	Description	Product Web Page
MCP14A0151/2	1.5 A single, low side MOSFET drivers small package sizes allow the gate driver to be positioned close to the MOSFET's physical gate connection, which minimizes gate bounce caused by the parasitic effects of PCB layout and reduces EMI. Rise time, fall time, propagation delay and cross-conduction current are all minimized. In addition, these devices feature a unique architecture with low input thresholds, ideally suited for use with a low-voltage MCU to minimize power losses within the system.	Click Here
MCP14A0153/4/5	Dual output versions of the fast, compact MCP14A0151/2 drivers.	Click Here
MIC4103/4	High frequency, 100V Half Bridge MOSFET drivers, featuring fast 24ns propagation delay times and 6ns driver fall times. The low-side and high-side gate drivers are independently controlled and matched to within 3ns typical. These include a high voltage internal diode that charges the high-side gate drive bootstrap capacitor, and . a robust, high-speed, and low power level shifter for clean level transitions to the high side output.	Click Here
MIC4608	600V half bridge driver, with a 450ns propagation delay including a 200ns input filtering time to prevent unwanted pulses. The low-side and high-side gate drivers are independently controlled (with shoot thru protection) or controlled with a single PWM signal.	Click Here
MCP14700	The MCP14700 is a high-speed synchronous MOSFET driver designed to optimally drive a high-side and low-side N-Channel MOSFET. The MCP14700 has two PWM inputs to allow independent control of the external N-Channel MOSFETs. Since there is no internal cross condition protection circuitry the external MOSFET dead time can be tightly controlled allowing for more efficient systems or unique motor control algorithms.	Click Here

<< BACK to BLOCK DIAGRAM

Temperature Sensing Solutions

Solutions	Description	
Thermocouple	Thermocouple Reference Design	Reference Circuit
	Thermocouple EMF to Degrees Celsius Converter	Reference Circuit
Voltage Output	Thermistor Vs. MCP9700 Temperature Sensing Solutions	Reference Circuit
Logic Output	TC62x and MCP950x Temperature Switches	Reference Circuit
Serial Output	MCP980x I^2C/SMBus Temperature Sensors	Reference Circuit
Remote Temperature Monitoring	Temperature Sensors with Multiple Remote Diode Monitors	Reference Circuit
Fan Management	Closed Loop Fan Controllers	Reference Circuit

Visit Thermal Management on Microchip.com for more information

<<Back to 2D Barcode Scanner << BACK to CONTENTS

Thermocouple Reference Design

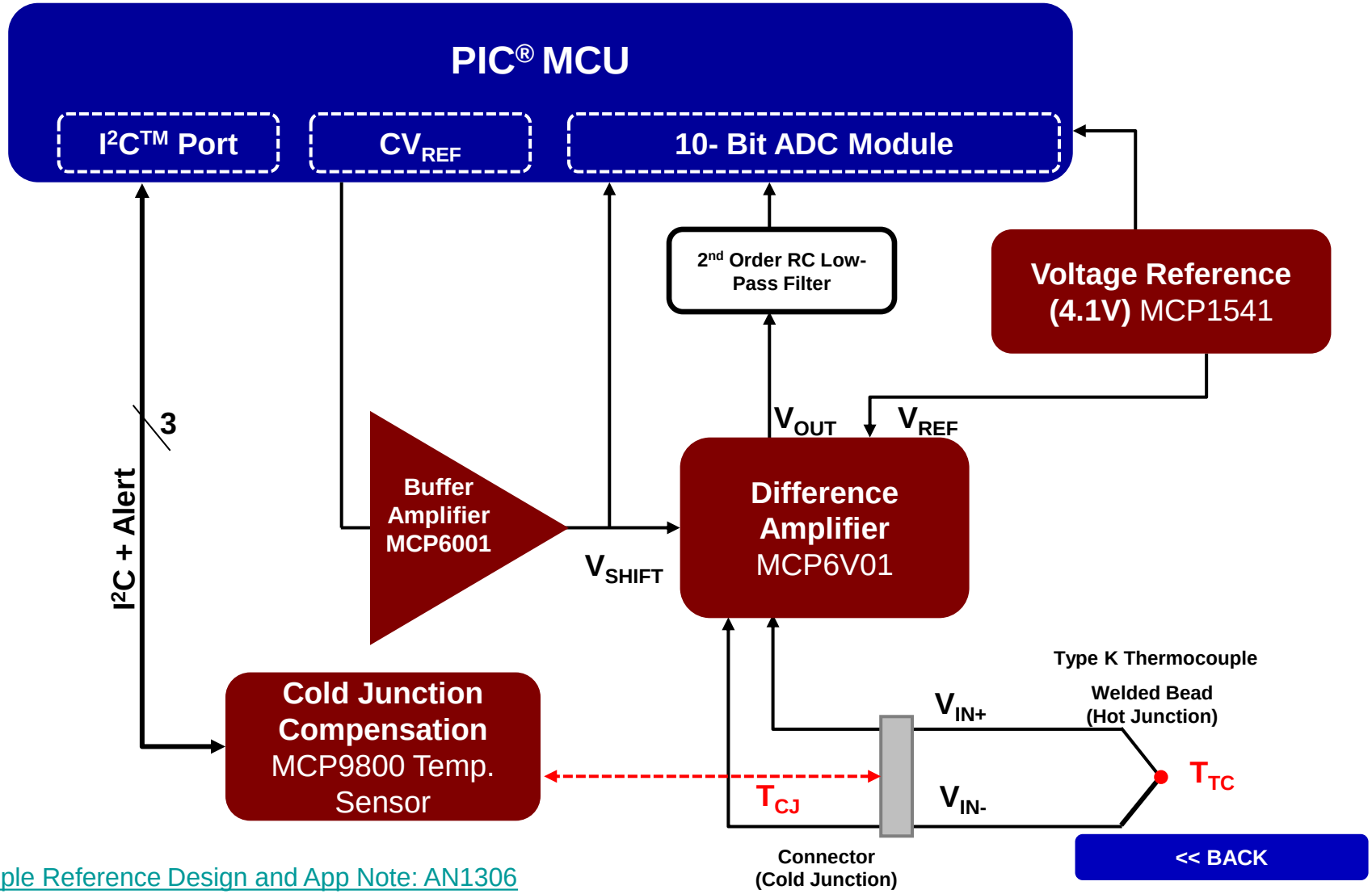

Thermocouple Reference Design and App Note: AN1306

Voltage Reference

Popular Products	Description	Product Web Page
MCP1525/41	MCP1525/41 is a low power, high precision voltage reference. It provides a precise output voltage of 4.096V which is then compared to other voltages in the system.	Click Here
MCP1501	The MCP1501 is a high-precision buffered voltage reference with an initial accuracy of 0.10% and is available in 8 voltage options. The MCP1501 is a low-drift bandgap-based reference and uses chopper-based amplifiers which significantly reduces the drift and provides high current output.	Click Here

<< BACK to BLOCK DIAGRAM

Operational Amplifier

Function	Popular Products	Description	Product Web Page
Difference Amplifier	MCP6V01/2/3	The MCP6V01/2/3 family of operational amplifiers has input offset voltage correction for very low offset and offset drift. These devices have a wide bandwidth product and strongly reject switching noise. They are unity gain stable, have no 1/f noise, and have good PSRR and CMRR	Click Here
Buffer Amplifier	MCP6001	The MCP6001 is a single general purpose op amp offering rail-to-rail input and output over the 1.8 to 6V operating range. This amplifier has a typical GBWP of 1 MHz with typical quiescent current of 100 microamperes. The MCP6001 is available in SC-70 and SOT-23 packages.	Click Here

<< BACK to BLOCK DIAGRAM

Temperature Sensors

- **Function: Measuring and providing temperature information**

Popular Products	Description	Product Web Page
MCP9800	The MCP9800 is a digital temperature sensor capable of reading temperatures from -55°C to +125°C. Temperature data is measured from an integrated temperature sensor and converted to digital word with a user selectable 9 to 12-bit Sigma Delta Analog to Digital Converter. The MCP9800 notifies the host controller when the ambient temperature exceeds a user programmed set point.	Click Here

<< BACK to BLOCK DIAGRAM

PIC18F2550

Popular Products	Description	Product Web Page
PIC18F2550	Ideal for low power (nanoWatt) and connectivity applications that benefit from the availability of three serial ports: FS-USB (12 Mbit/s), I²C™ and SPI™ (up to 10Mbit/s) and an asynchronous (LIN capable) serial port (EUSART). Large amounts of RAM memory for buffering and Enhanced FLASH program memory make it ideal for embedded control and monitoring applications that require periodic connection with a (legacy free) Personal Computer via USB for data upload/download and/or firmware updates. While operating up to 48 MHz, the PIC18F2550 is also mostly software and hardware compatible with the PIC16C745 Low-Speed USB OTP devices.	Click Here

<< BACK to BLOCK DIAGRAM

Thermocouple EMF to DegC Converter

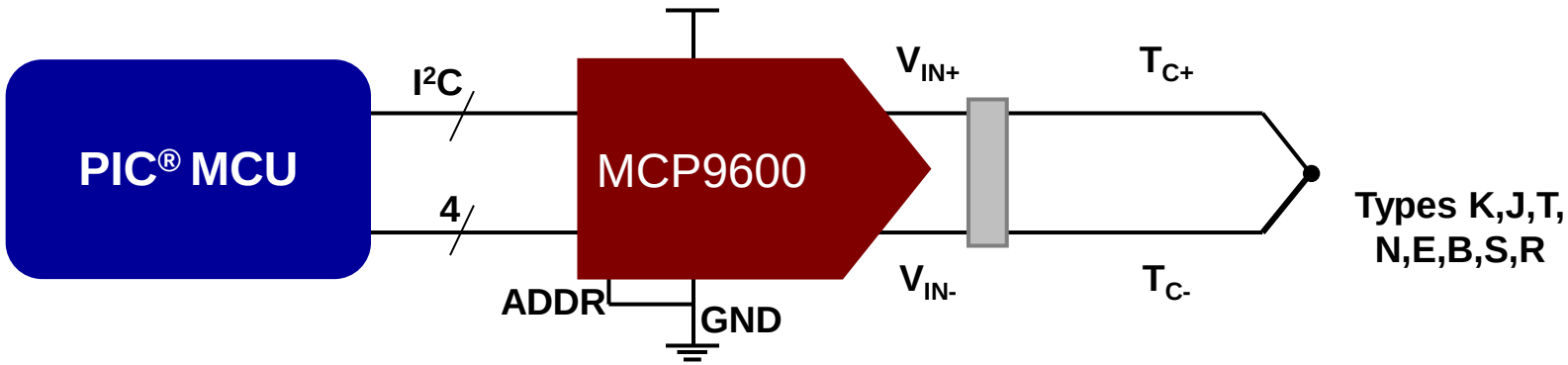

The MCP9600 provides a complete thermocouple EMF to degree Celsius solution with a maximum accuracy of 1.5°C across the entire thermocouple temperature range, with no calibration required.

<< BACK

MCP9600

Integrates:

- Precision Instrumentation
- Precision Temperature Sensor
- Precision, High-Resolution ADC
- Math Engine with Firmware to Support: Type K, J, T, N, S, E, B and R Thermocouples

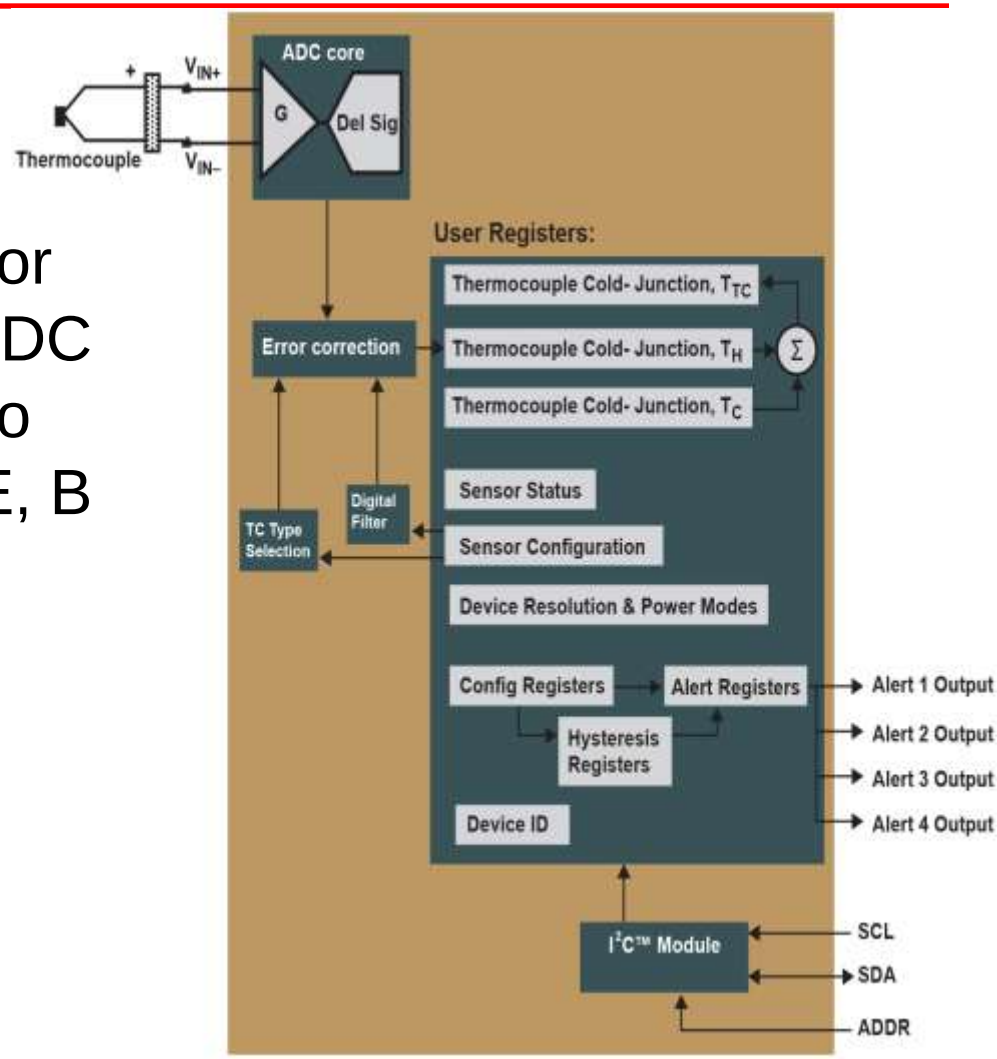

[MCP9600 Demo Board]
[MCP9600 Product Page]

<< BACK to BLOCK DIAGRAM

PIC Microcontrollers

- **Function: providing all the control and some peripheral functions**
- **Popular products: PIC16F627/8, PIC12F675, PIC16C781/2**
- **Attributes:**
  - 20MHz operating speed
  - PWM output (PIC16F627/8)
  - Integrated comparators, op-amp, ADC, DAC
  - 128 bytes of EEPROM
  - Available in PDIP, SOIC, and TSSOP packages
  - 8-pin solutions (PIC12F675)

<< BACK to BLOCK DIAGRAM

MCP9700 and Thermistor Solutions

App Note, AN685: Thermistors in Single Supply Temperature Sensing Circuits

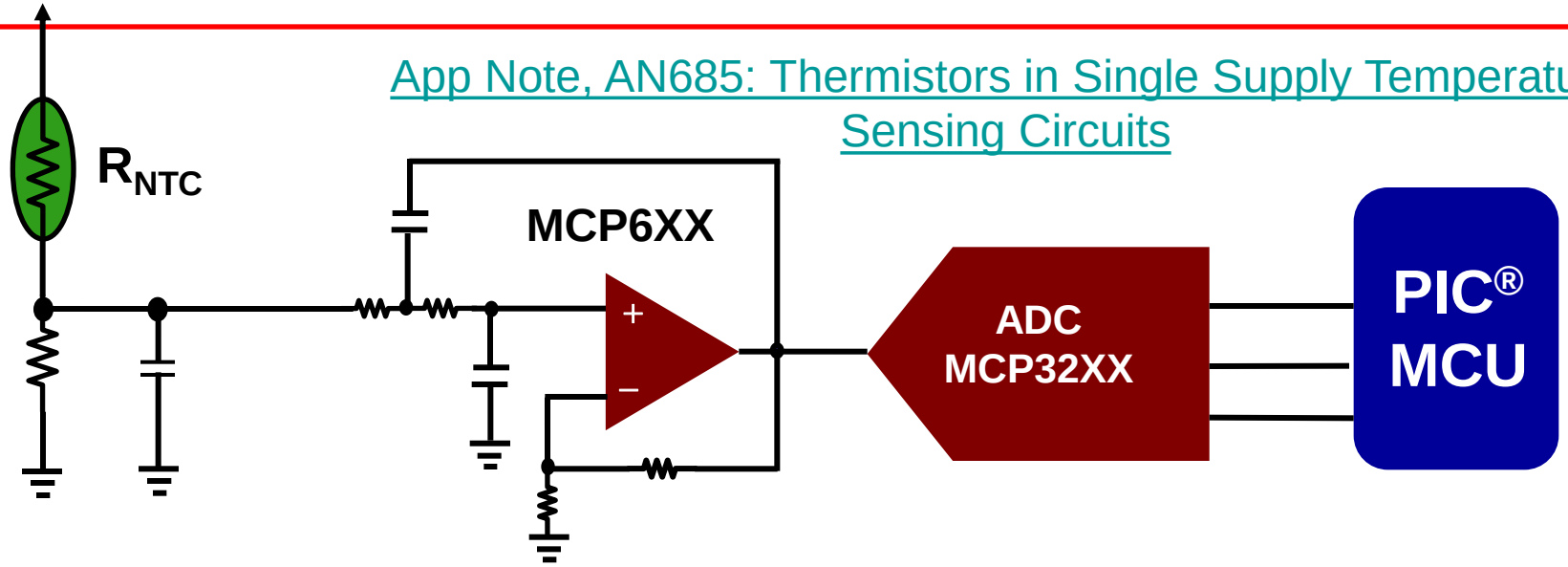

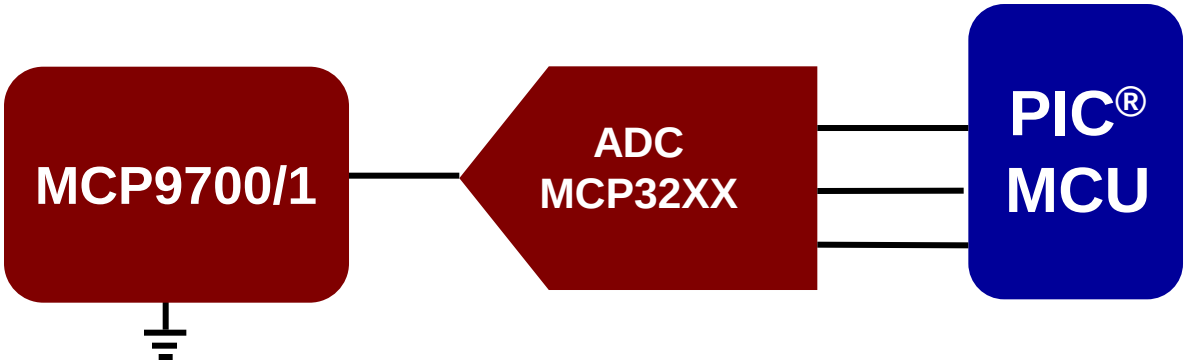

App Note, AN1001: IC Temperature Sensor Accuracy Compensation with a PIC Microcontroller

<< BACK

Temperature Sensors

- **Function: Measuring and providing temperature information**

Popular Products	Description	Product Web Page
MCP9700 Linear Active Thermistor™ ICs	The output voltage of this device is directly proportional to measured temperature. The MCP9700 can accurately measure temperature from -40C to +150C with the output calibrated to a slope of 10mV/°C and has a DC offset of 500mV.	Click Here
Demo Boards:		
MCP9700 Temperature-to-Voltage Converter PICtail™ Demo Board	The MCP9700 Temperature-to-Voltage Converter PICtail™ Demo Board demonstrates how to interface the MCP9700 to a microcontroller. This can be used by the system designer as an example of how to integrate an analog temperature sensor into systems	Click Here

<< BACK to BLOCK DIAGRAM

Analog to Digital Converter

Popular Products	Description	Product Web Page
MCP3221	The MCP3221 is a 12-bit SAR A/D converter. Available in the SOT-23 package, the MCP3221 provides a low max. conversion current and standby current of 250 µA and 1 µA respectively. Communication to the MCP3221 is performed using a 2-wire I2C™ Compatible interface. The MCP3221 runs on a single supply voltage range of 2.7 V to 5.5 V.	Click Here
MCP3201	The MCP3201 12-bit Analog-to-Digital Converter (ADC) combines high performance and low power consumption in a small package, making it ideal for embedded control applications. The MCP3201 features SAR architecture and a SPI serial interface, allowing 12-bit ADC capability to be added to any PIC® microcontroller. The MCP3201 features 100k samples/second, 1 input channel, low power consumption (5nA typical standby, 400µA max. active).	Click Here

<< BACK to BLOCK DIAGRAM

Operational Amplifiers

Popular Products	Description	Product Web Page
MCP6001/2/4	The MCP6004 is a quad general purpose op amp offering rail-to-rail input and output over the 1.8 to 6V operating range. This amplifier has a typical GBWP of 1 MHz with typical quiescent current of 100 microamperes.	Click Here
MCP6H01/2/4	MCP6H04 has a wide supply voltage range of 3.5V to 16V and rail-to-rail output operation. This device has a gain bandwidth product of 1.2 MHz (typical), while only drawing 135 µA/amplifier (typical) of quiescent current.	Click Here
MCP6291/2/4	MCP6294 provide wide bandwidth of 10 MHz Gain Bandwidth Product. This family also operates from a single supply voltage as low as 2.4V to 6V, while drawing 1 mA (typical) quiescent current.	Click Here

<< BACK to BLOCK DIAGRAM

Logic-Output Temperature Sensor

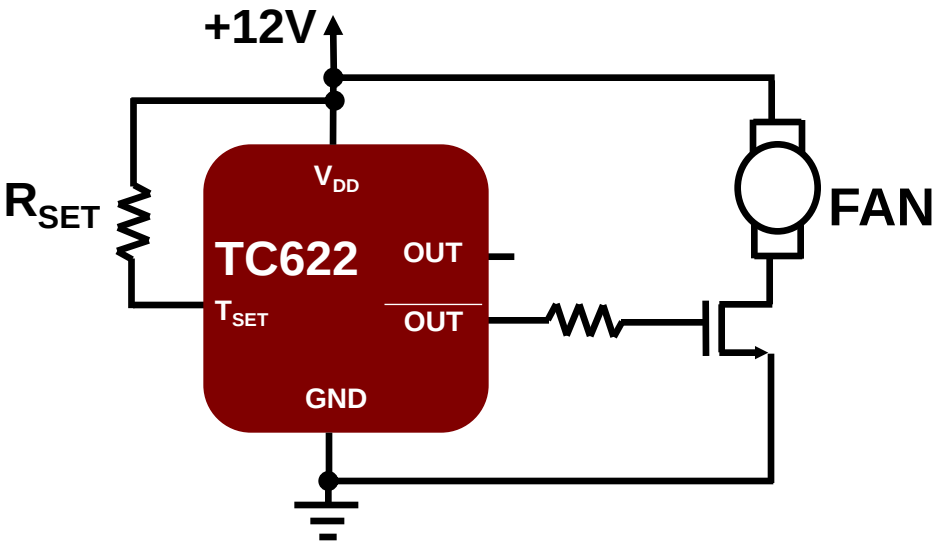

Fan on/off Control

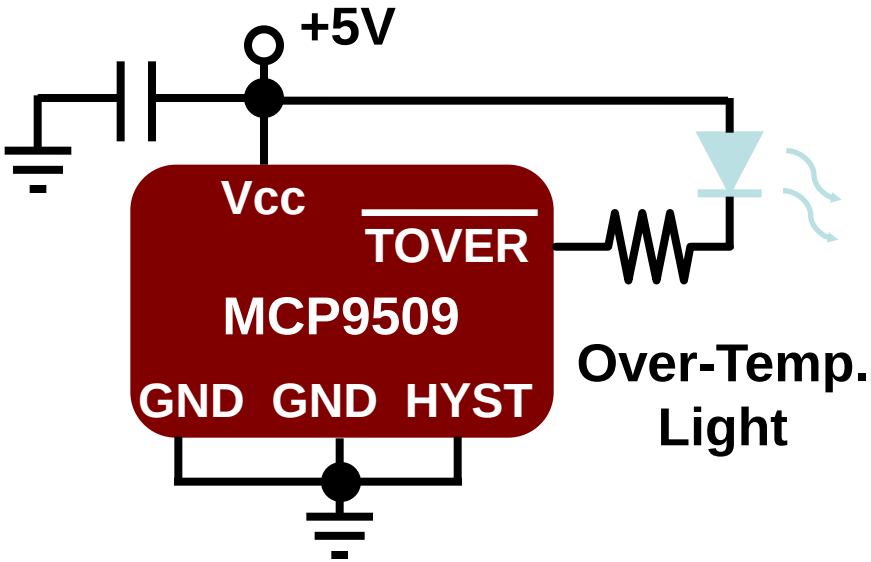

Over-temperature Indication

<< BACK

Logic Output Temperature Sensor

Popular Products	Description	Product Web Page
TC622/4	TC622 and TC624 are programmable solid state temperature sensors designed to replace mechanical switches in sensing and control applications. Both devices integrate the temperature sensor with a voltage reference and all required detector circuitry. The desired temperature set point is set by the user with a single external resistor. Ambient temperature is sensed and compared to the programmed setpoint.	Click Here
MCP9501/2/3/4	MCP9501/2/3/4 family of devices are temperature switches with ±1°C (typical) accurate factory set output thresholds. These devices are ideal for high power supply systems where an overtemperature protection circuit is needed. These devices do not require external components, consume 25 µA (typical), and the factory set thresholds provide simplicity	Click Here

<< BACK to BLOCK DIAGRAM

Serial-Output Temperature Sensor

- **Advantages**
  - Direct communication
  - Save PCB space
  - Minimize design time
  - Low power
- **Applications**
  - Computers
  - Set-top boxes
  - Office equipment
  - Wireless handsets

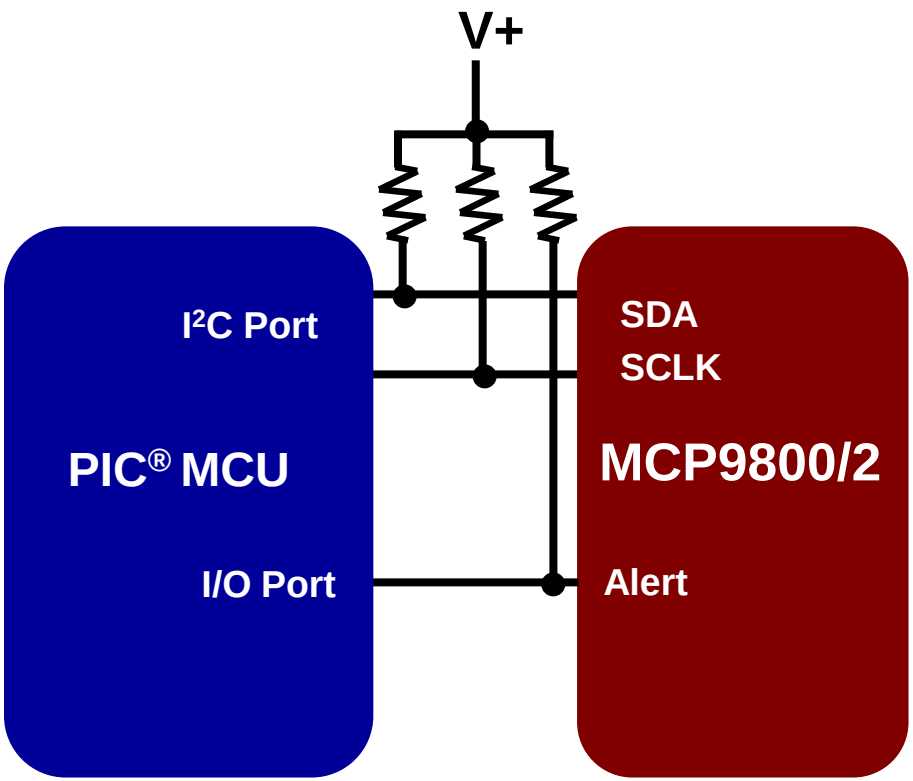

MCP9800DM-DL2 development tool

<< BACK

Temperature Sensors

- **Function: Measuring and providing temperature information**

Popular Products	Description	Product Web Page
MCP9800/02 Digital temperature sensor	Features • 2-wire I²C™/SMBus Compatible Interface • User Selectable 9- to 12-Bit Resolution • ±1°C Accuracy from -10°C to +85°C • ±2°C Accuracy from -10°C to +125°C • Low Operating Current: 220 µA (typical) • Shutdown Mode: 1 µA (max) • Power Saving One-Shot Temperature Conversion Measurement • Space Saving SOT-23 Package	Click Here
Visit Thermal Management on Microchip.com for more information		

<< BACK to BLOCK DIAGRAM

Temperature Sensors with Remote Diode Monitors

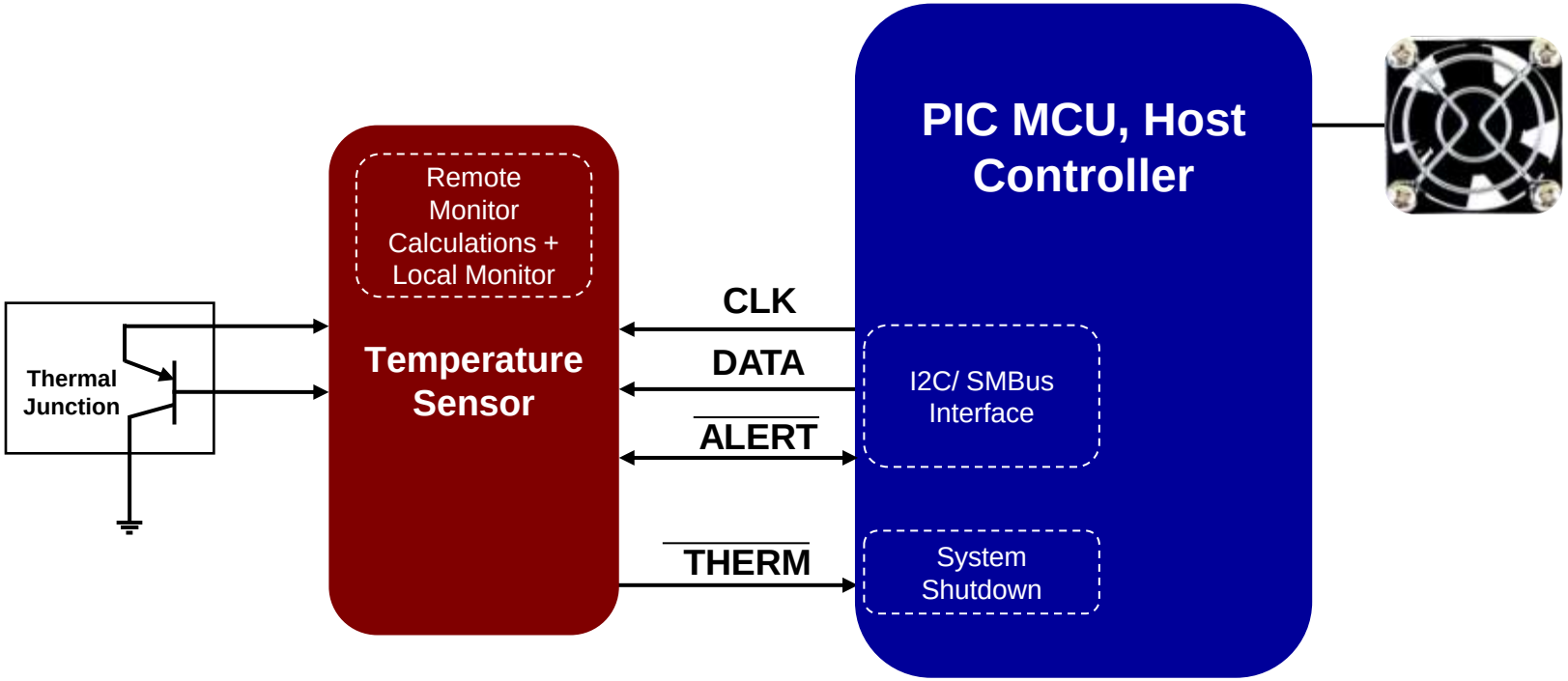

AN12.14 Remote Thermal Sensing Diode Selection Guide

AN10.14 Using Temperature-Sensing Diodes with Remote Thermal Sensors

<< BACK

A Wide Selection for Any Number of Temperatures

Device	External Sensors	Local Monitor	Alert/ THERM	SYS SHDN	Package	Comments*
EMC1072	1	1	2		MSOP 8	
EMC1073	2	1	2		MSOP 10	
EMC1074	3	1	2		MSOP 10	APD
EMC1412	1	1	2		MSOP 8	REC
EMC1413	2	1	2		MSOP 10	REC
EMC1414	3	1	2		MSOP 10	REC, APD
EMC1422	1	1	1	1	MSOP 8	REC
EMC1423	2	1	1	1	MSOP 10	REC
EMC1043	2	1			MSOP 8	REC, Hottest
EMC1053	2	1			MSOP 8	REC, Hottest
EMC1424	3	1	1	1	MSOP 10	REC, APD
MCP9902	1	1	2		WDFN 8	REC, APD
MCP9903	2	1	2		TDFN 10	REC, APD
MCP9904	2	1	2		TDFN 10	REC, APD
EMC1046	5	1			MSOP 10	REC, APD, Hottest
EMC1047	6	1			MSOP 10	REC, APD, Hottest
EMC1428	7	1	1	1	QFN 16	REC, APD, Hottest
EMC1438	7	1	1	1	QFN 16	REC, APD, Hottest, Block RD

REC – Resistance Error Correction / APD- Anti-parallel Diodes / Hottest- Can report hottest temp

<< BACK to BLOCK DIAGRAM

Closed Loop Fan Controllers

- Closed-Loop: Fan speed checked & adjusted
- Fan diagnostics: aging, dust, blocked air path
- Most have built in thermal management

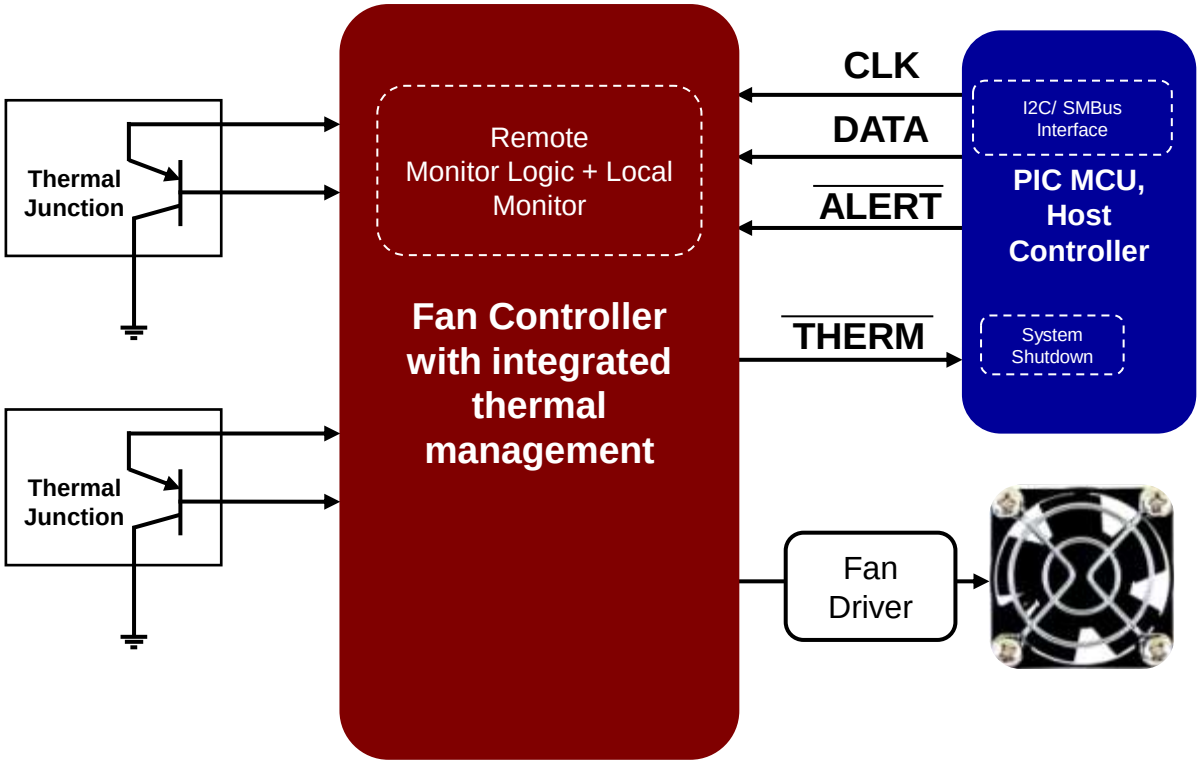

<< BACK

Better Control and Quick Time to Market

- **Technologies**
  - Remote temperature monitoring
  - Multi-zone control and mapping
    - Up to 4 temps control one fan
    - 8 entry lookup tables (speed vs temp)
  - Fan ramp rate and Spin-up Control
    - Minimizes acoustic annoyances in fan speed
  - Linear drivers connect directly to 5V fan (600mA)

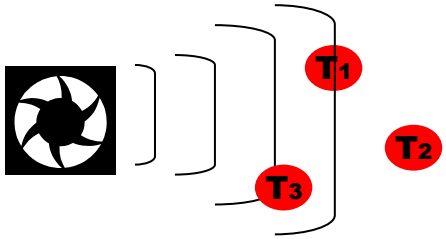

NEXT >>

Fan Controllers for Driving Up to Five Fans

Device	PWM Output	Linear Outputs	Algorithm	Sensors	Hardware MGT	Pkg
EMC2112		1	▪ RPM Closed Loop	1 int, 3 ext	◆	20 QFN
EMC2301	1		▪ RPM Closed Loop	0	◆	MSOP8
EMC2302	2		▪ RPM Closed Loop	0	◆	MSOP10
EMC2303	3		▪ RPM Closed Loop	0	◆	12 QFN
EMC2305	5		▪ RPM Closed Loop	0	◆	16 QFN
EMC2101	1	PWM or DAC Linear	▪ Open Loop Temp / PWM	1 int, 1 ext	◆	MSOP8
EMC2103	1		▪ RPM Closed Loop	1 int, 3 ext	◆	12 QFN 16 QFN
EMC2113	1		▪ RPM Closed Loop	1 int, 3 ext	◆	16 QFN
EMC2104	2		▪ RPM Closed Loop	1 int, 3 ext	◆	28 QFN
EMC2105		1	▪ RPM Closed Loop	1 int, 3 ext	◆	20 QFN
EMC2106	4	1	▪ RPM Closed Loop	1 int, 3 ext	◆	28 QFN

<< BACK to BLOCK DIAGRAM

2D Barcode Scanner

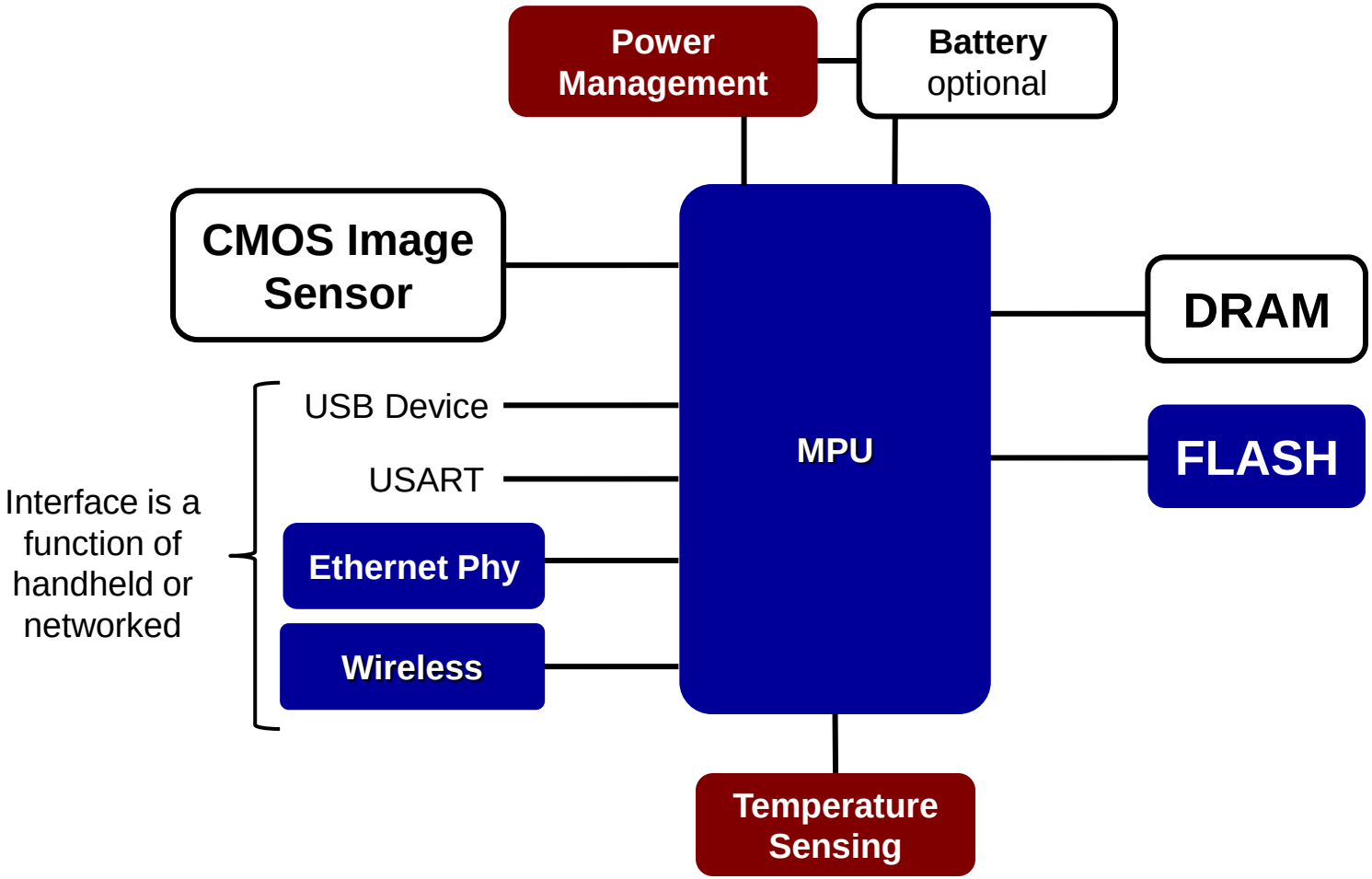

<< BACK to CONTENTS

MPU

Popular Products	Description	Product Web Page
SAM9G20	SMART® ARM®-based SAM9G20 is a 400MHz ARM926-based processor with an extensive range of communication peripherals. It embeds Full Speed USB host and device interfaces, a 10/100 Ethernet MAC and an image sensor interface, as well as standard peripherals such as a multimedia card interface (MCI), I2S, USART, master/slave SPIs, 16-bit timers, TWI and four-channel 10-bit ADC.	Click Here
SAMA5D2	SMART SAMA5D2 series is a high-performance, ultra-low-power ARM Cortex-A5 processor based MPU. The Cortex A5 processor runs up to 500MHz and features the ARM NEON SIMD engine a 128kB L2 cache and a floating point unit.	Click Here

<< BACK to BLOCK DIAGRAM

FLASH

Popular Products	Description	Product Web Page
SST26VF064B	The SST26VF064B Serial Quad I/O (SQI) flash device utilizes a 4-bit multiplexed I/O serial interface to boost performance while maintaining the compact form factor of standard serial flash devices. Operating at frequencies reaching 104 MHz, the SST26VF064B enables minimum latency execute-in-place (XIP) capability without the need for code shadowing on an SRAM. SST's proprietary, high-performance CMOS SuperFlash® technology, which significantly improves performance and reliability for robust, low-power operation.	Click Here

<< BACK to BLOCK DIAGRAM

Ethernet Physical Layer

Popular Products	Description	Product Web Page
LAN8710A/20A	Excellent ESD Protection levels without any external protection devices. Integrated DSP with adaptive equalizer. Integrated 1.2V Linear Regulator. Incorporates SMSC flexPWR. Uses a low cost 25MHz xtal for RMII. Lead free ROHS compliant packages: Commercial (0 to +70C) and Industrial (-40 to +85C) temperature supported	Click Here
LAN8740A/1A/2A	Energy Efficient Ethernet 802.3az, Wake On LAN support (WoL), Cable Diagnostics, HP Auto-MDIX, Compliant with IEEE 802.3/802.3u, Integrated DSP with adaptive equalizer, Integrated 1.2V Linear Regulator, Uses a low cost 25MHz xtal for RMII Lead free ROHS compliant packages	Click Here

<< BACK to BLOCK DIAGRAM

Industry-Leading Wireless Portfolio

Technology	Protocol	Network Stack	Frequency
Wi-Fi®	IEEE 802.11	TCP/IP	2.4/5 GHz
Bluetooth®	IEEE 802.15.1	BT v2.1, BT Audio, BTLE v4.1	2.4 GHz
Wireless One Way	Proprietary	MiWi™ + KEELOQ® Technology	Sub-1 GHz
Wireless Two Way	Proprietary or IEEE 802.15.4	MiWi, BT, ZigBee®, RF4CE, LoRa® Technology	Sub-1 GHz and 2.4 GHz

Visit the Wireless Connectivity Design Center

The LoRa name and associated logo are registered trademarks of Semtech Corporation or its subsidiaries.

<< BACK to BLOCK DIAGRAM

Metering Concentrator

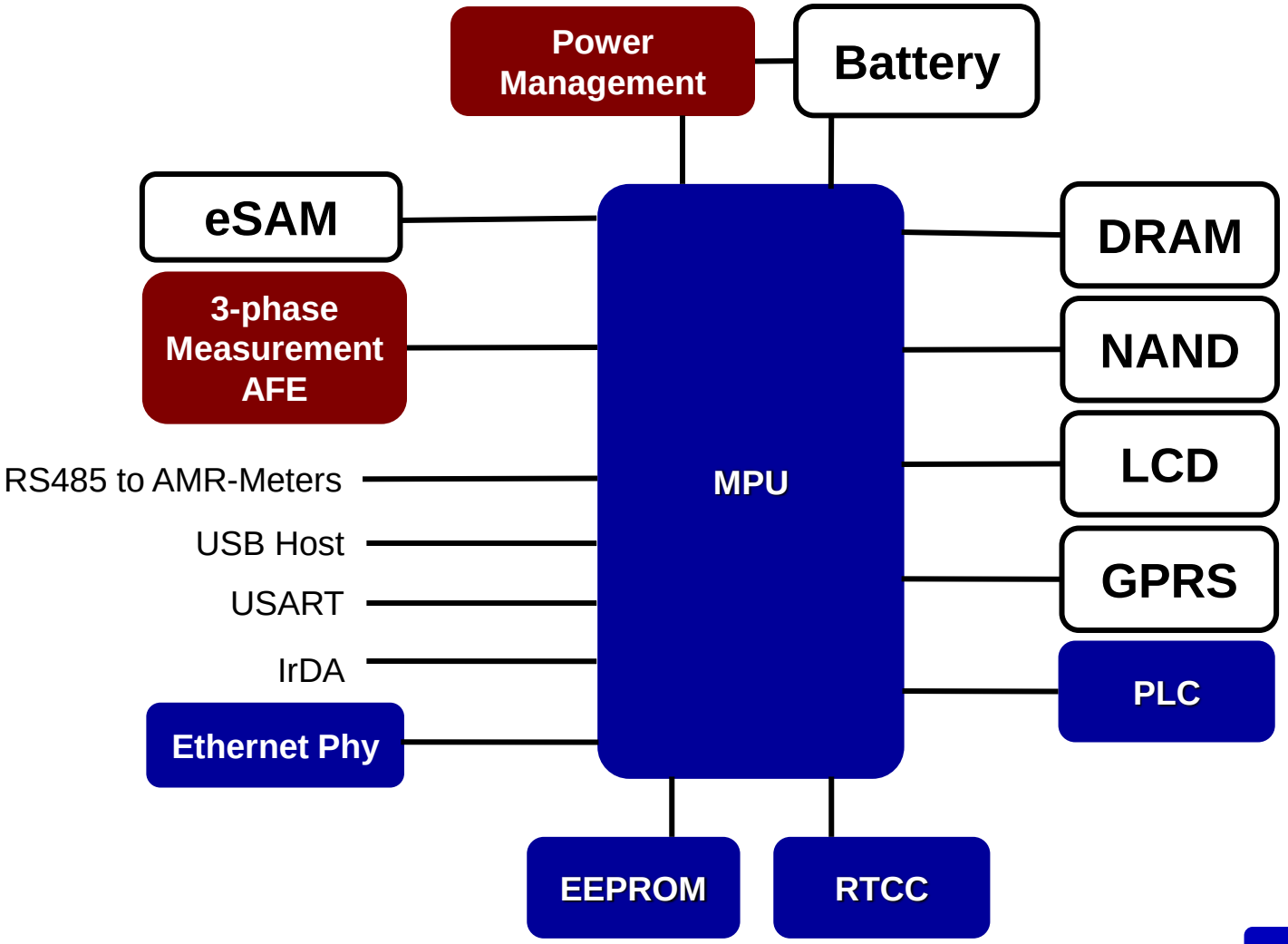

<< BACK to CONTENTS

MPU/MCU

- **Function:**
  - Power calculations
  - More powerful MCUs for (wireless) communications
- **Popular products:**
  - PIC16F15XX
  - PIC16F182X
  - PIC18F65J90
  - PIC24FJ128GA306, PIC24FJ128GA310
  - PIC32 (advanced smart meters)
  - ATSAM4Cx, ATSAM4CMx, ATSAM4CPx

<< BACK to BLOCK DIAGRAM

Energy Measurement Analog Front Ends

- **Energy Measurement AFEs provide the most flexible and highest accuracy solutions**

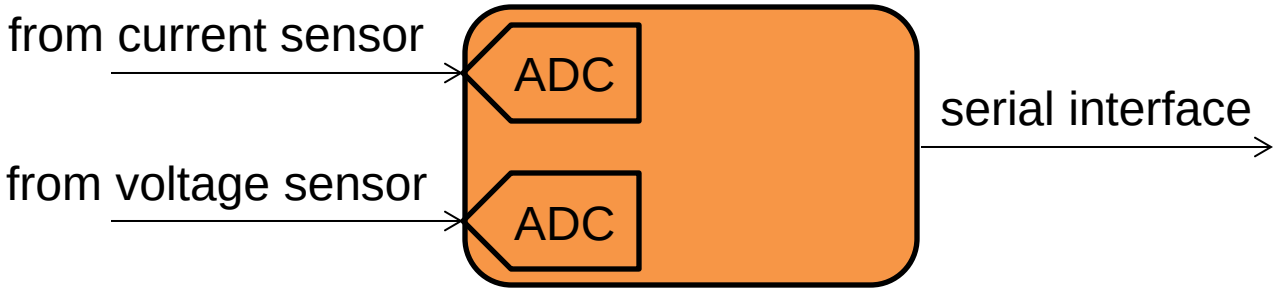

- **Energy Calculation ICs provide energy and power calculations, simplifying design**

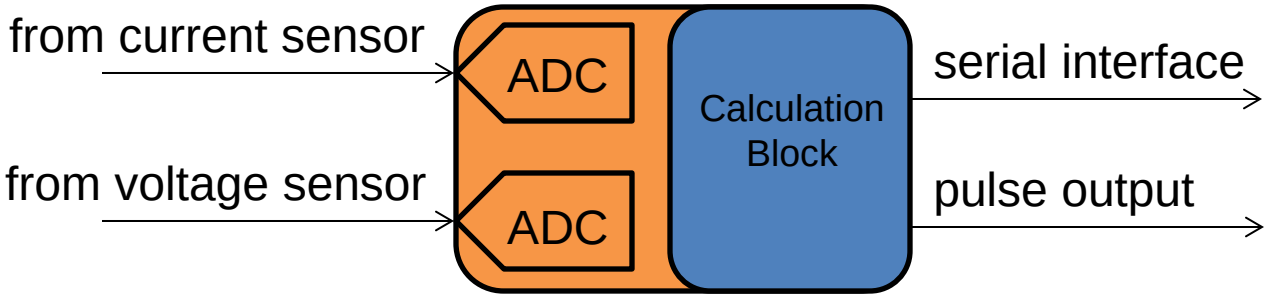

NEXT

Energy Measurement Analog Front Ends

Part Number	# of ADCs	Power Measurement
MCP3918	1	1-Phase or 3-Phase (shunt-based)
MCP3910	2	1-Phase or 3-Phase (shunt-based)
MCP3911	2	1-Phase
MCP3919	3	1-Phase w/ Neutral
MCP3912	4	2-Phase (Dual/Split-Phase)
MCP3913	6	3-Phase
MCP3914	8	3-Phase w/ Neutral
ATSENSE101	3	1-Phase w/ Neutral
ATSENSE201(H)	4	2-Phase (Dual/Split-Phase)
ATSENSE301(H)	7	3-Phase w/ Neutral

NEXT

Energy Measurement Analog Front Ends

- **Energy measurement AFEs enables the most flexible and highest accuracy solutions**

Popular Products	Description	Product Web Page
MCP391X	The MCP391X AFE family provide up to eight simultaneously sampling Delta-Sigma Analog-to-Digital Converters (ADC), PGAs, phase delay compensation block, low-drift voltage reference, digital offset and gain errors calibration registers, and high-speed 20 MHz SPI interface. The family enables 0.1% typical active power measurement error over a 10000:1 dynamic range.	Click Here
ATSENSE	The ATSENSE AFE family integrate three, four or seven simultaneously sampled Sigma-Delta ADCs, a high-precision voltage reference a programmable current signal amplification, a temperature sensor and an SPI interface. When used in combination with the ATSAM4C device family and metrology library, the ATSENSE exceeds ANSI C12.20-2002 and IEC 62053-22 metering accuracy classes of up to 0.2% over 3000:1 dynamic range	Click Here

Winning Attributes

<< BACK to Block Diagram

Energy Measurement AFE Winning Attributes

- **Attributes:**
  - MCP391X industry leading accuracy enables 0.1% active power measurement error (typ.) over a 10000:1 dynamic range, use of smaller shunt sensors, and reduction in calibration requirements
    - Programmable data rate up to 125 ksps allows device to run at low power or at high speed for advanced signal acquisition such as for harmonic analysis
  - ATSENSE ideal companion chip with ATSAM4C dual cortex-M4 MCU family and metrology library

BACK

EEPROM and RTCC

Popular Products	Description	Product Web Page
24AA512	The 24AA512 is a 512Kb (64K x 8) Serial Electrically Erasable PROM (EEPROM), capable of operation across a broad voltage range (1.7V to 5.5V) and functional up to 125C. This ultra-reliable EEPROM has been developed for advanced, low-power applications and offers the benefit of over 1M Erase/Write cycles. This device also has a page write capability of up to 128 bytes of data. This 24AA512 is capable of both random and sequential reads up to the 512K boundary.	Click Here
MCP79410	The MCP79410 I^2C™Compatible real-time clock/calendar (RTCC) is highly integrated with nonvolatile memory and advanced features that include a battery switchover circuit for backup power, a timestamp to log power failures and digital trimming for accuracy. Using a low-cost 32.768 kHz crystal or other clock source, time is tracked in either a 12-hour or 24-hour format with an AM/PM indicator and timing to the second, minute, hour, day of the week, day, month and year. In addition, non-volatile memory is included along with a Unique ID in a locked section of EEPROM.	Click Here

<< BACK to BLOCK DIAGRAM

Ethernet Physical Layer

Popular Products	Description	Product Web Page
LAN8710A/20A	Excellent ESD Protection levels without any external protection devices. Integrated DSP with adaptive equalizer. Integrated 1.2V Linear Regulator. Incorporates SMSC flexPWR. Uses a low cost 25MHz xtal for RMII. Lead free ROHS compliant packages: Commercial (0 to +70C) and Industrial (-40 to +85C) temperature supported	Click Here
LAN8740A/1A/2A	Energy Efficient Ethernet 802.3az, Wake On LAN support (WoL), Cable Diagnostics, HP Auto-MDIX, Compliant with IEEE 802.3/802.3u, Integrated DSP with adaptive equalizer, Integrated 1.2V Linear Regulator, Uses a low cost 25MHz xtal for RMII Lead free ROHS compliant packages	Click Here

<< BACK to BLOCK DIAGRAM

PLC

	ATPL230A	ATPL250A	SAM4CP16B	SAM4CP16C
Standard	PRIME	G3	PRIME	G3
Band	< 500 kHz	< 500 kHz	< 500 kHz	< 500 kHz
Core	-	-	Dual Cortex-M4	Dual Cortex-M4
CPU Clock	-	-	120 MHz @core	120 MHz @core
Flash	-	-	1 MB	1 MB
SRAM	-	-	128+16+8 KB	128+16+8 KB
Package	LQFP80	LQFP80	LQFP176	LQFP176
Pin to Pin	YES		YES	
Availability	In production	In production	In production	In production

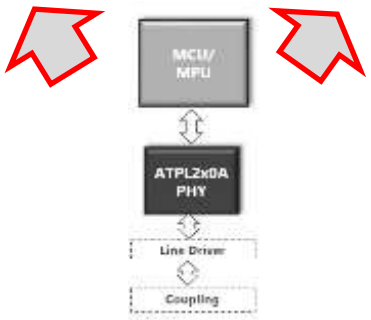

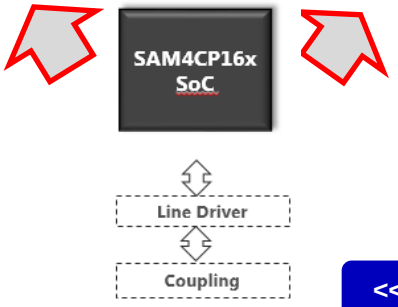

<< BACK to BLOCK DIAGRAM

Industrial Control Panel

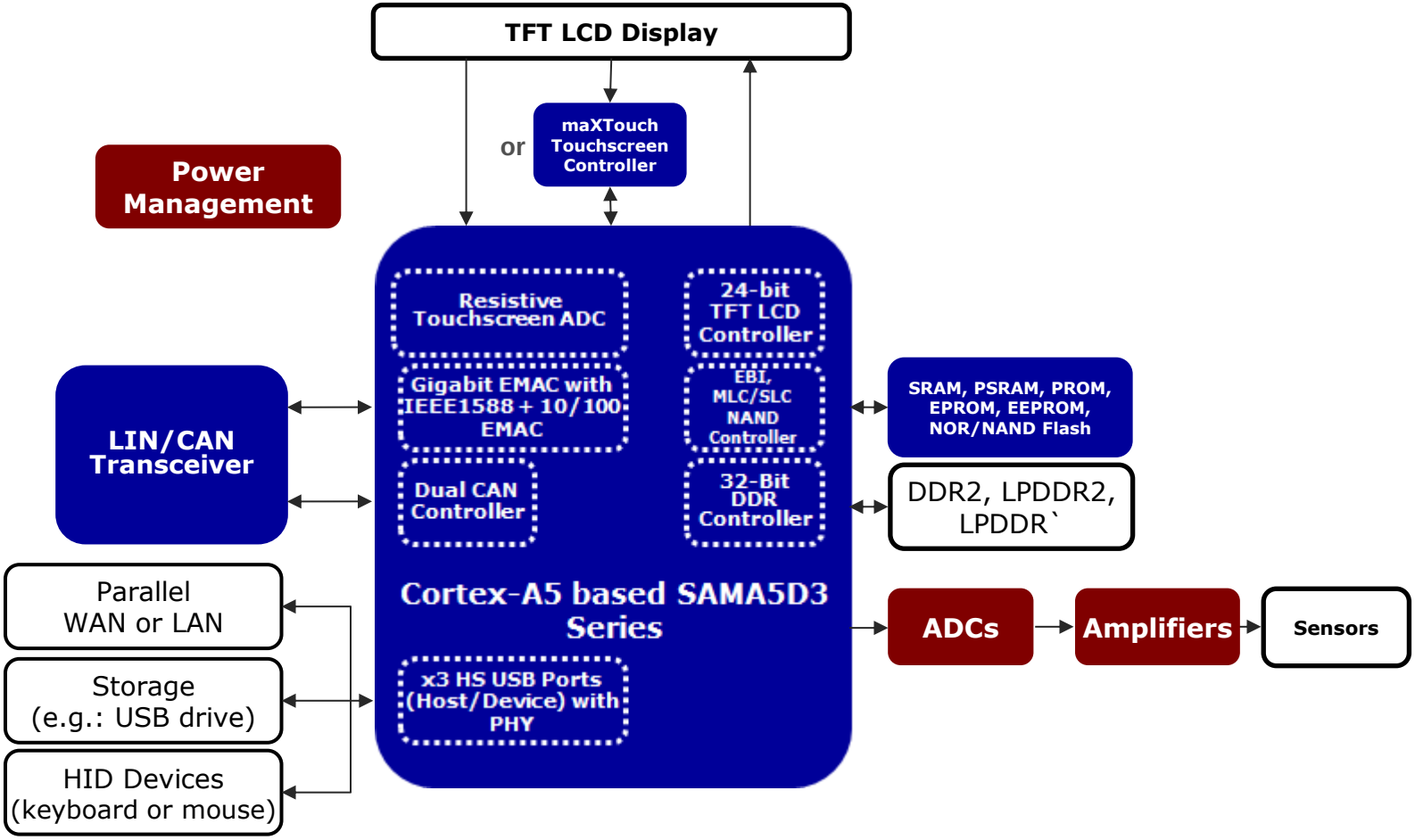

<< BACK to CONTENTS

Capacitive Touch Solutions

- **Function: Adds touch input functionality**

Popular Products	Description	Product Web Page
maxTouch® Touchscreen Controllers	The maXTouch touch controller family provides a leading projected capacitive technology for touchscreens and touch pads. It supports single-finger, multi-fingers and gloved-finger operation. Regardless of the operating environment—hot or cold, dry or wet, noisy power supply or strong radiating surrounding devices—maXTouch controllers are designed for robust and reliable operation without compromising touch performance.	Click Here

<< BACK to BLOCK DIAGRAM

LIN/ CAN

	Suggested Products	Description	Product Web page
LIN	ATA663203	Stand-alone LIN LDO	LIN Design Center
	ATA663211 ATA6662C/63/4	Globally automotive approved and qualified Stand-alone transceiver	
	ATA6670	Globally automotive approved and qualified Stand-alone Dual LIN transceiver	
	ATA663231/32/54/55 ATA6625, ATA6629/31 MCP2021A/2A/25	Globally automotive approved and qualified Stand-alone transceiver + 3.3V or 5V Voltage Regulator	
	MCP2050, ATA663431/54 ATA6628/30, ATA6622C/24C/26C	Globally automotive approved and qualified Stand-alone transceiver + 3.3V or 5V Voltage Regulator + Window Watchdog Timer	
	ATA663331/54	Globally automotive approved and qualified Stand-alone transceiver + 3.3V or 5V Voltage Regulator + 2x Relay Driver	
	ATA664151	Globally automotive approved and qualified Stand-alone transceiver + 3.3V or 5V Voltage Regulator + 8x HV Switches	
	ATA6612C/13C/ 14Q/16C/17C ATSAMHA1G, PIC16F1829LIN	8-bit MCU with an integrated LIN transceiver + Voltage Regulator	
CAN, CAN FD	MCP2515	External CAN controller supports CAN V2.0B specification Can also interface with MCU with Standard SPI.	CAN Design Center
	MCP25625	CAN 2.0 external Controller + Transceiver	
	MCP2561/2	Globally automotive approved and qualified, High Speed CAN Transceivers	
	MCP2561/2FD, ATA6560/61	Globally automotive approved and qualified CAN Flexible Data-rate (CAN FD) Transceivers	
	MCP25612FD	Dual CAN 2.0 or CAN FD Transceiver	

<< BACK to BLOCK DIAGRAM

Memory

Popular Products	Description	Product Web Page
24AA256	The 24AA256 is a 256Kb (32K x 8) Serial Electrically Erasable PROM (EEPROM), capable of operation across a broad voltage range (1.7V to 5.5V) and functional up to 125C. This ultra-reliable EEPROM has been developed for advanced, low-power applications and offers the benefit of over 1M Erase/Write cycles.	Click Here
23K256	The 23K256 is a standalone Serial SRAM that offers designers an easy and inexpensive way to add more RAM to their application. These 8-pin low power, high performance SRAM devices have unlimited endurance and zero write times, making them ideal for applications involving continuous data transfer, buffering, data logging, audio, video, internet, graphics, and other math and data-intensive functions.	Click Here
SST26VF032B	The SST26VF032B Serial Quad I/O (SQI) flash device utilizes a 4-bit multiplexed I/O serial interface to boost performance while maintaining the compact form factor of standard serial flash devices. Operating at frequencies reaching 104 MHz, the SST26VF032B enables minimum latency execute-in-place (XIP) capability without the need for code shadowing on an SRAM.	Click Here

<< BACK to BLOCK DIAGRAM

MPU

Popular Products	Description	Product Web Page
SAMA5D	Operating at 850DMIPS at under 150mW, the Atmel SMART SAMA5D3 MPU is ideal for any high-performance, low-power and cost-sensitive industrial application.	Click Here

<< BACK to BLOCK DIAGRAM

Analog-to-Digital Converter

- **Function: Convert analog signals from sensors to digital code**

Popular Products	Description	Product Web Page
MCP3421	The MCP3421 is a single channel low-noise, high accuracy Delta-Sigma A/D converter with differential inputs and up to 18 bits of resolution in a small SOT-23-6 package. The device uses a two-wire I2C™ compatible serial interface and operates from a single power supply ranging from 2.7V to 5.5V.	Click Here
MCP3551	MCP355X devices are 2.7V to 5.5V, 22-bit delta-sigma A/D converters. The family exhibit good linearity, high accuracy and low noise performance for applications where sensor measurements such as pressure are performed.	Click Here

<< BACK to BLOCK DIAGRAM

Amplifiers

Popular Products	Description	Product Web Page
MCP603x	The MCP6031/2/3/4 op amps have a gain bandwidth of 10 kHz with a low typical operating current of 0.9 µA and an offset voltage that is less than 150 µV.	Click Here
MCP6444	The MCP6444 is a quad general purpose op amp offering rail-to-rail input and output over the 1.8 to 6V operating range. This amplifier has a typical GBWP of 9 kHz with typ. quiescent current of 450 nA .	Click Here
MCP60x	MCP601/2/3/4 (op amp) has a gain bandwidth product of 2.8 MHz with low typical operating current of 230 µA and an offset voltage that is less than 2 mV.	Click Here
MCP6Vxx Family of Zero-Drift Amplifiers	The MCP6Vxx provides high DC precision, including an offset voltage as low as 2µV and offset drift as low as 15nV/°C maximum. They have low quiescent current, no 1/f noise and offer superior CMRR/PSRR performance. The family has an operating voltage as low as 1.6V and are available in small packages (SC-70 and DFN)	Click Here
MCP6Nxx Family of Instrumentation Amplifiers	Microchip expanded its portfolio of amplifiers by first introducing the MCP6N11 the industry's first instrumentation amplifier featuring mCal technology and most recently introducing the MCP6N16 Zero-Drift instrumentation amplifier. • Rail-to-Rail Input and Output • Gain Set by two (2) External Resistors • Enable/Vos Calibration Pin (MCP6N11) • Zero-Drift Architecture (MCP6N16) • Operating Voltage Range: 1.8V to 5.5V	Click Here

<< BACK to BLOCK DIAGRAM

Unmanned Aerial Vehicle (UAV)

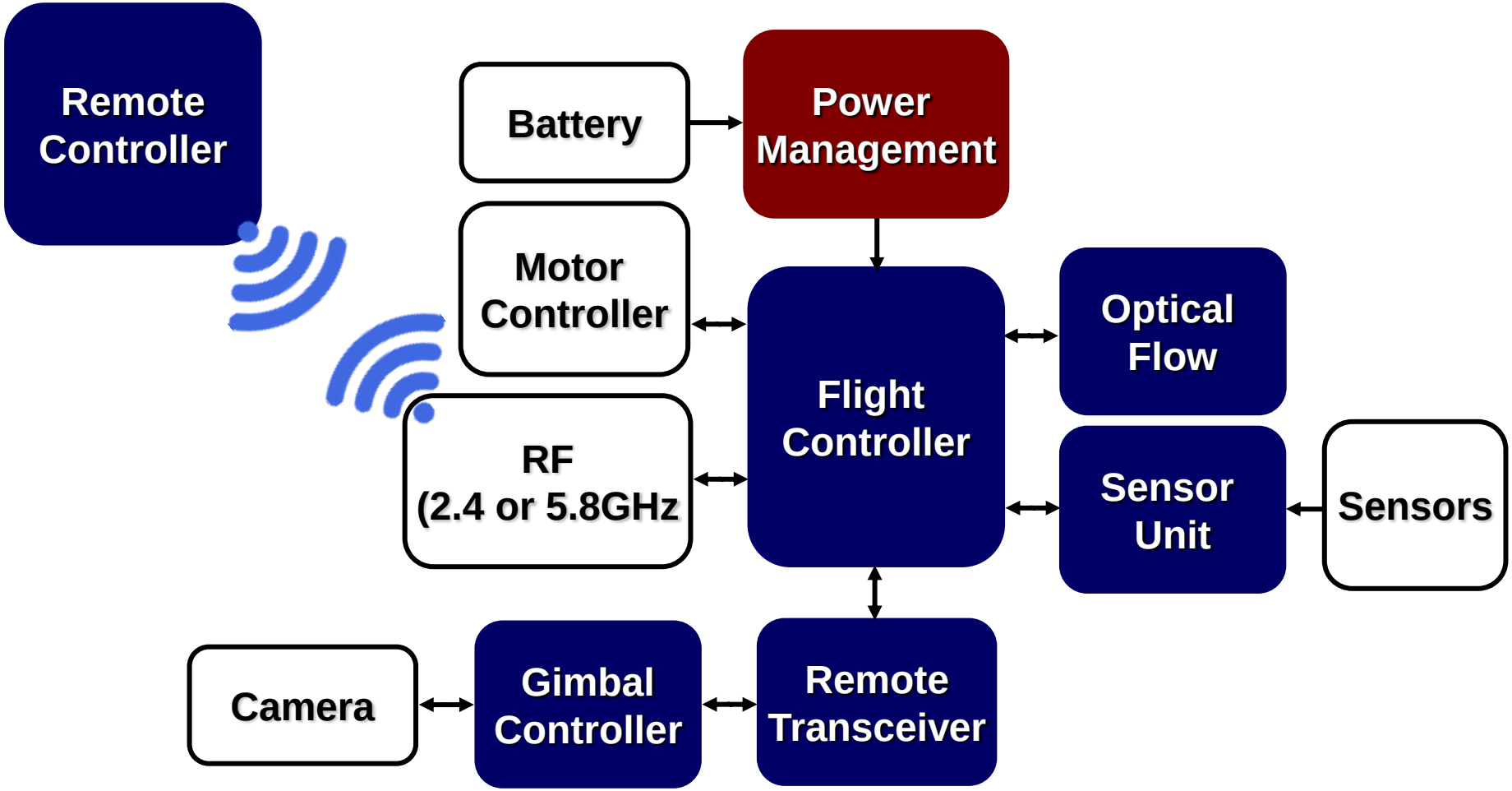

<< BACK to CONTENTS

UAV
Flight Controller

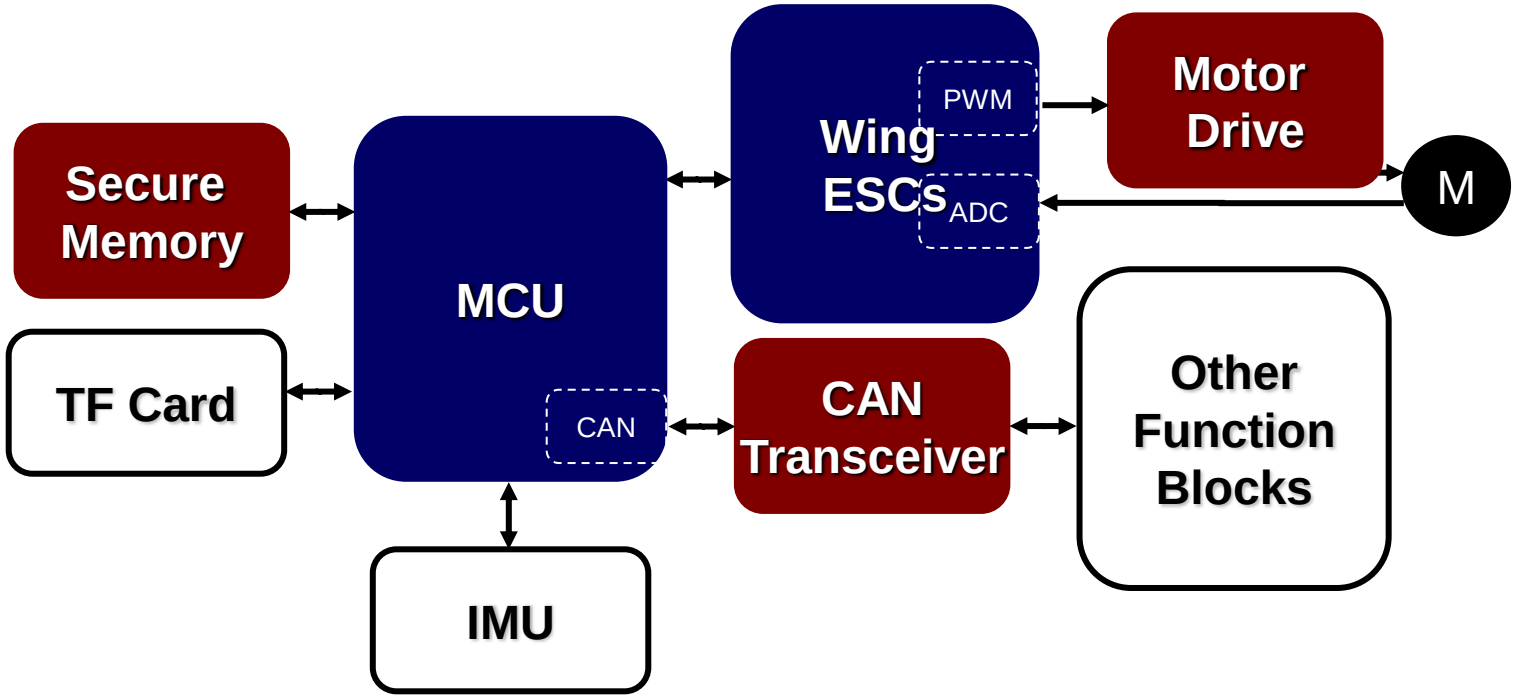

<< BACK to BLOCK DIAGRAM

UAV
Optical Flow

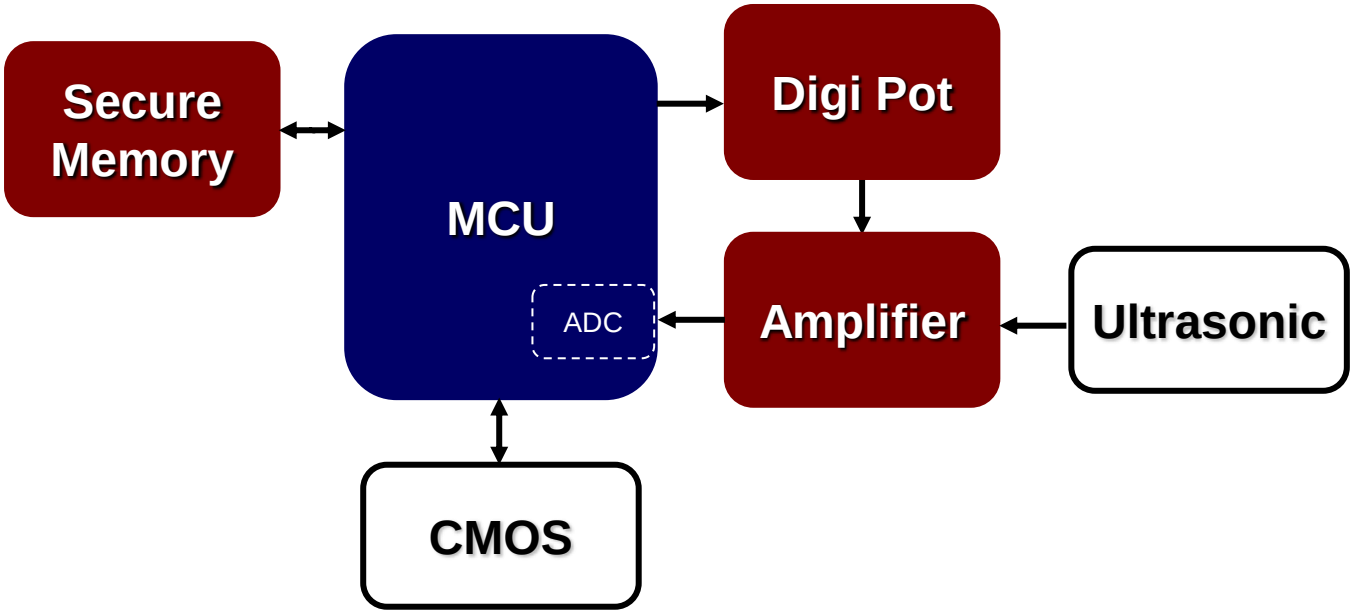

<< BACK to BLOCK DIAGRAM

UAV
Gimbal Controller

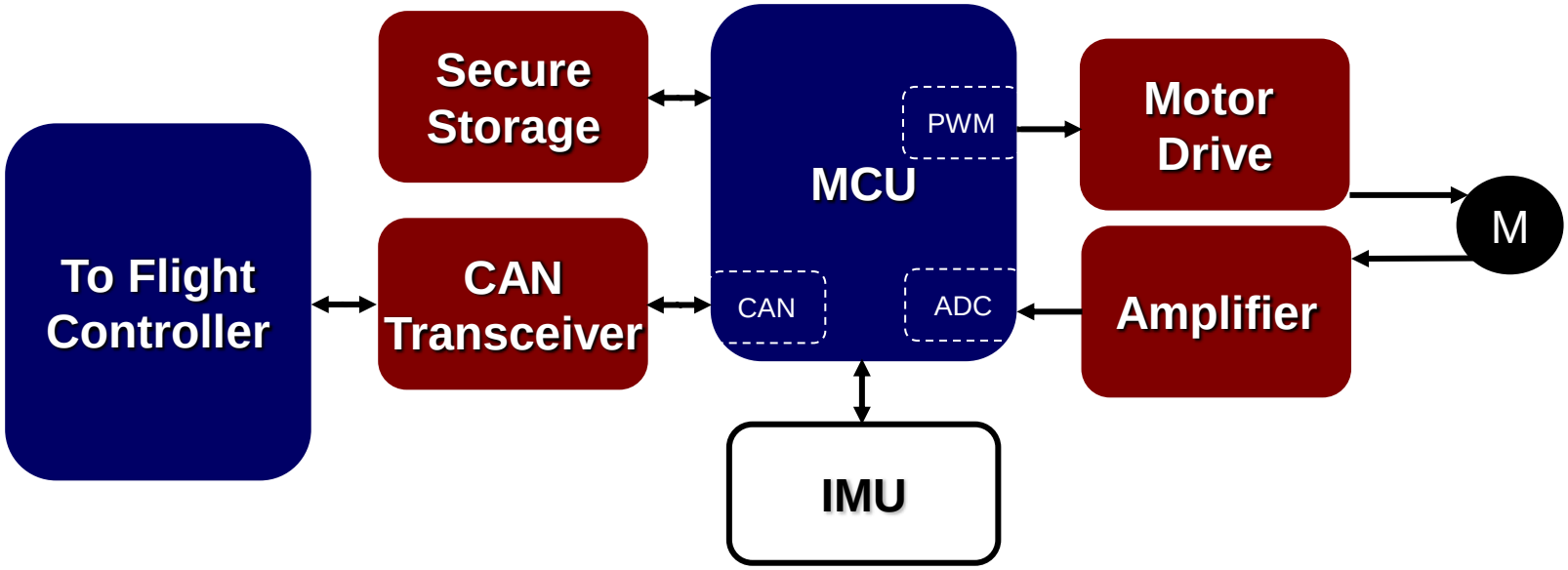

<< BACK to BLOCK DIAGRAM

UAV
Remote Controller

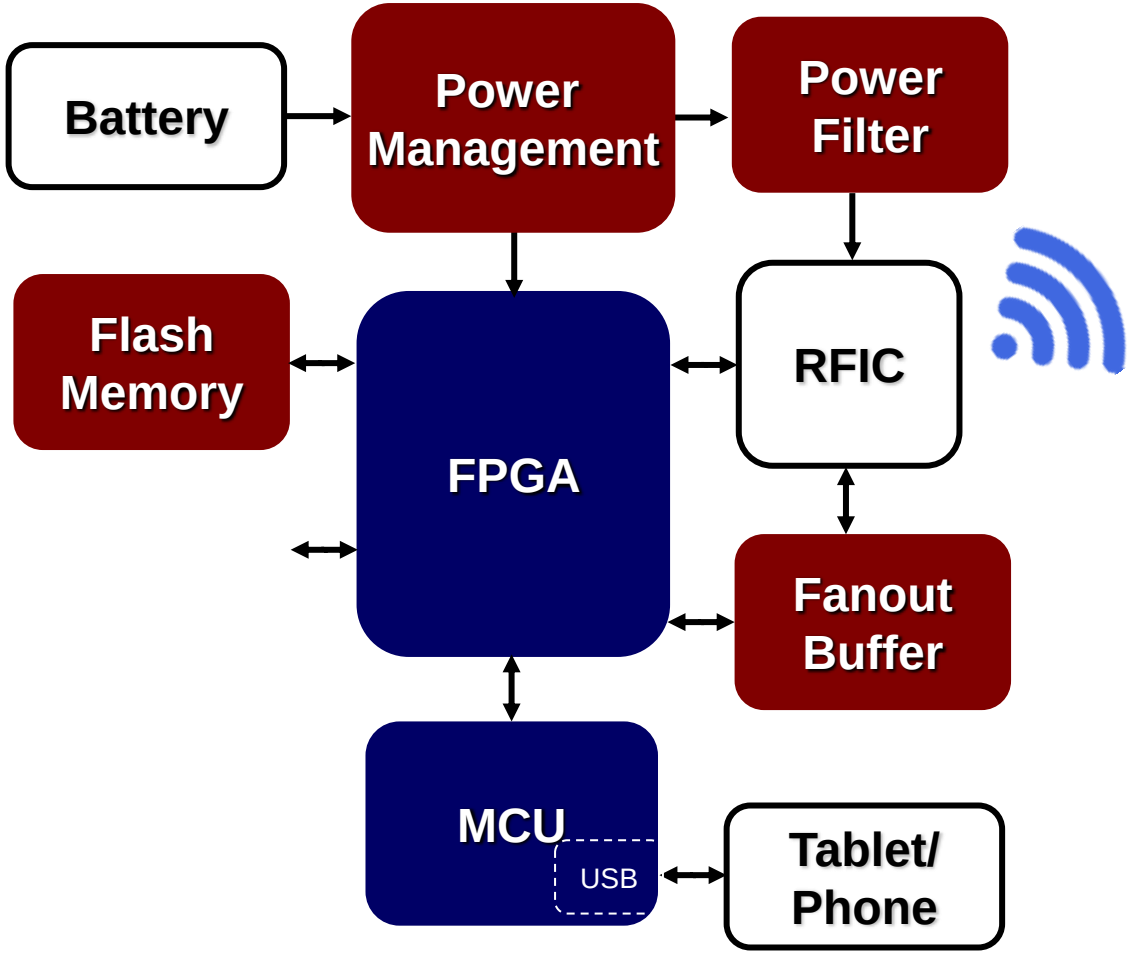

<< BACK to CONTENTS

UAV Power Management

Popular Products	Description	Product Web Page
MIC26601	The MIC26601 is a 600kHz constant-frequency, synchronous buck regulator featuring a unique adaptive on-time control architecture. The MIC26601 operates over an input supply range of 4.5V to 28V and provides a regulated output of up to 6A of output current. The output voltage is adjustable down to 0.8V with a guaranteed accuracy of ±1%.	Click Here
MIC26400	The MIC26400 is a 300kHz constant-frequency, synchronous buck regulator featuring a unique digitally modified adaptive ON-time control architecture. The MIC26400 operates over an input supply range of 4.5V to 26V and provides a regulated output at up to 5A of output current. The output voltage is adjustable down to 0.8V with a typical accuracy of ±1%.	Click Here

<< BACK to BLOCK DIAGRAM

Secure Storage

Popular Products	Description	Product Web Page
ATAES132A	The ATAES132A crypto element with hardware-based key storage is a very fast high-security serial 32K EEPROM device that enables authentication and confidential nonvolatile data storage. It is a direct drop-in for industry standard Serial EEPROMS, and supports the Advanced Encryption Standard (AES) cryptography standard. The AES-128 cryptographic engine operates in AES-CCM mode to provide authentication, stored data encryption/decryption, and Message Authentication Codes (MACs)	Click Here

<< BACK to BLOCK DIAGRAM

Flight Controller MCU

Popular Products	Description	Product Web Page
ATSAME70Q21A	The Atmel | SMART SAME70Q21 devices are members of a flash microcontrollers family based on the high-performance 32-bit ARM Cortex-M7 processor with Floating Point Unit (FPU). These devices operate at up to 300MHz and feature up to 2048 Kbytes of Flash, up to 384 Kbytes of multi-port SRAM and configurable Instruction and Data Tightly Couple Memories to leverage the advanced DSP capabilities of the core. SAME70Q21 features multiple networking/connectivity peripherals, including CAN-FD interface and one 1O/100Mbps Ethernet MAC with specific hardware support for Audio Video Bridging (AVB). Additional communication interfaces include a HS USB Host and Device, a HS SDCard/SDIO/MMC interface, USARTs, SPIs and multiple TWIs. Analog features include dual 2Msps 12-bit ADCs with analog front end offering offset and gain error correction, and 2Msps 12-bit DAC.	Click Here

<< BACK to BLOCK DIAGRAM

Wing ESCs MCU

Popular Products	Description	Product Web Page
ATMEGAxx8	Ideal for Sensorless BLDC, megaAVR 8-bit AVR microcontrollers offer substantial program and data memories with performance up to 20 MIPS. Meanwhile, innovative Atmel picoPower® technology minimizes power consumption.	Click Here
dsPIC33EP32MC204	Ideal for Sensorless FOC/BLDC, Microchip's dsPIC33E family of digital signal controllers (DSCs) features a 70 MIPS dsPIC® DSC core with integrated DSP and enhanced on-chip peripherals. These DSCs enable the design of high-performance, precision motor control systems that are more energy efficient, quieter in operation, have a great range and extended life. They can be used to control brushless DC, permanent magnet synchronous, AC induction and stepper motors.	Click Here

<< BACK to BLOCK DIAGRAM

Motor Drive

Popular Products	Description	Product Web Page
MIC4607	The MIC4607 is an 85V, three-phase MOSFET driver. The MIC4607 features a fast (35ns) propagation delay time and 20ns driver rise/fall times for a 1nF capacitive load. TTL inputs can be separate high- and low-side signals or a single PWM input with high and low drive generated internally. High- and low-side outputs are guaranteed to not overlap in either mode.	Click Here
MCP87050	The MCP87000 family of high-speed MOSFETs have been designed to optimize the trade-off between ultra-low On-state resistance (Rds-on) and Gate Charge (Qg) to maximize power conversion efficiency in switched mode power supplies.	Click Here

<< BACK to BLOCK DIAGRAM

CAN Transceiver

Popular Products	Description	Product Web Page
ATA6570	The ATA6570 is a standalone high speed CAN-FD transceiver that interfaces a Controller Area Network (CAN) protocol controller and the physical two wire CAN bus designed for high speed CAN applications in the automotive environment. It provides local and enhanced remote wake-up capabilities.	Click Here

<< BACK to BLOCK DIAGRAM

Secure Storage

Popular Products	Description	Product Web Page
ATSHA204A	The ATSHA204A is a full turnkey security device. It includes a 4.5Kb EEPROM divided into 16 slots. This array can be used for storage of keys, miscellaneous read/write, read-only, password or secret data, and consumption tracking. Access to the various sections of memory can be restricted in a variety of ways and then the configuration locked to prevent changes.	Click Here

<< BACK to BLOCK DIAGRAM

Digital Potentiometer

Popular Products	Description	Product Web Page
MCP4017	Used to adjust gain and trim, the MCP4017/8/9 devices are volatile, 7-bit (128 wiper steps) digital potentiometers with an I2C™Compatible interface. This family offers 5kΩ, 10kΩ, 50kΩ and 100kΩ end-to-end resistance values and is available in miniature 5 or 6 lead SC-70 packaging with potentiometer or rheostat pinouts.	Click Here

<< BACK to BLOCK DIAGRAM

Operational Amplifier

Popular Products	Description	Product Web Page
MCP607x	The MCP607x op amps have low input offset voltage (±150 µV max) and rail-to-rail input and output operation. They are unity gain stable and with a gain bandwidth product of 1.2 MHz (typical). These devices operates with a single supply voltage as low as 1.8V, while drawing low quiescent current per amplifier (110 µA typical).	Click Here
MCP6V6x	The MCP6V6x family of operational amplifiers provides input offset voltage correction for very low offset (±150 µV, max) and offset drift (15 nV/°C) with enhanced EMI rejection. These devices provide a gain bandwidth product of 1 MHz, are unity gain stable, have no 1/f noise, and provide superior CMRR and PSRR performance. These products operate with a single supply voltage as low as 1.8V with a quiescent current per amplifier of only 130 uA max.	Click Here

<< BACK to BLOCK DIAGRAM

Sensor Unit
MCU & Op Amps

Popular Products	Description	Product Web Page
ATSAMD20	A rich set of peripherals, flexibility and ease-of-use combined with low power consumption define the SAM D20 ARM Cortex-M0+ based microcontroller series, which run up to 48MHz with up to 256KB Flash and 32KB SRAM.	Click Here
MCP607x	The MCP607x op amps have low input offset voltage (±150 µV max) and rail-to-rail input and output operation. They are unity gain stable and with a gain bandwidth product of 1.2 MHz (typical). These devices operates with a single supply voltage as low as 1.8V, while drawing low quiescent current per amplifier (110 µA typical).	Click Here
MCP6V6x	The MCP6V6x family of operational amplifiers provides input offset voltage correction for very low offset (±150 µV, max) and offset drift (15 nV/°C) with enhanced EMI rejection. These devices provide a gain bandwidth product of 1 MHz, are unity gain stable, have no 1/f noise, and provide superior CMRR and PSRR performance. These products operate with a single supply voltage as low as 1.8V with a quiescent current per amplifier of only 130 uA max.	Click Here

<< BACK to BLOCK DIAGRAM

Remote Transceiver MCU

Popular Products	Description	Product Web Page
ATATSAMC21	A rich set of peripherals, flexibility and ease-of-use combined with 2.7V – 5.5V operating voltage define the SAM C21 ARM Cortex-M0+ based microcontroller series, which run up to 48MHz with up to 256KB Flash and 32KB SRAM.	Click Here

<< BACK to BLOCK DIAGRAM

Gimbal Controller MCU

Popular Products	Description	Product Web Page
ATSAME70N19A	The SMART SAME70N19 devices are members of a flash microcontrollers family based on the high-performance 32-bit ARM Cortex-M7 processor with Floating Point Unit (FPU). These devices operate at up to 300MHz and feature up to 512 Kbytes of Flash, up to 256 Kbytes of multi-port SRAM and configurable Instruction and Data Tightly Couple Memories to leverage the advanced DSP capabilities of the core. SAME70N19 features multiple networking/connectivity peripherals, including CAN-FD interface and one 1O/100Mbps Ethernet MAC with specific hardware support for Audio Video Bridging (AVB). Additional communication interfaces include a HS USB Host and Device, a HS SDCard/SDIO/MMC interface, USARTs, SPIs and multiple TWIs. Analog features include dual 2Msps 12-bit ADCs with analog front end offering offset and gain error correction, and 2Msps 12-bit DAC.	Click Here
dsPIC33EP32MC5 04/128MC504	dsPIC33E family of digital signal controllers (DSCs) features a 70 MIPS dsPIC® DSC core with integrated DSP and enhanced on-chip peripherals. These DSCs enable the design of high-performance, precision motor control systems that are more energy efficient, quieter in operation, have a great range and extended life. They can be used to control brushless DC, permanent magnet synchronous, AC induction and stepper motors. These devices are also ideal for high-performance general purpose applications.	Click Here

<< BACK to BLOCK DIAGRAM

Secure Storage

Popular Products	Description	Product Web Page
ATSHA204A	The ATSHA204A is a full turnkey security device. It includes a 4.5Kb EEPROM divided into 16 slots. This array can be used for storage of keys, miscellaneous read/write, read-only, password or secret data, and consumption tracking. Access to the various sections of memory can be restricted in a variety of ways and then the configuration locked to prevent changes.	Click Here

<< BACK to BLOCK DIAGRAM

Operational Amplifier

Popular Products	Description	Product Web Page
MCP607x	The MCP607x op amps have low input offset voltage (±150 µV max) and rail-to-rail input and output operation. They are unity gain stable and with a gain bandwidth product of 1.2 MHz (typical). These devices operates with a single supply voltage as low as 1.8V, while drawing low quiescent current per amplifier (110 µA typical).	Click Here
MCP6V6x	The MCP6V6x family of operational amplifiers provides input offset voltage correction for very low offset (±150 µV, max) and offset drift (15 nV/°C) with enhanced EMI rejection. These devices provide a gain bandwidth product of 1 MHz, are unity gain stable, have no 1/f noise, and provide superior CMRR and PSRR performance. These products operate with a single supply voltage as low as 1.8V with a quiescent current per amplifier of only 130 uA max.	Click Here

<< BACK to BLOCK DIAGRAM

Motor Drive

Popular Products	Description	Product Web Page
MIC4607	The MIC4607 is an 85V, three-phase MOSFET driver. The MIC4607 features a fast (35ns) propagation delay time and 20ns driver rise/fall times for a 1nF capacitive load. TTL inputs can be separate high- and low-side signals or a single PWM input with high and low drive generated internally. High- and low-side outputs are guaranteed to not overlap in either mode.	Click Here
MCP87050	The MCP87000 family of high-speed MOSFETs have been designed to optimize the trade-off between ultra-low On-state resistance (Rds-on) and Gate Charge (Qg) to maximize power conversion efficiency in switched mode power supplies.	Click Here

<< BACK to BLOCK DIAGRAM

CAN Transceiver

Popular Products	Description	Product Web Page
ATA6570	The ATA6570 is a standalone high speed CAN-FD transceiver that interfaces a Controller Area Network (CAN) protocol controller and the physical two wire CAN bus designed for high speed CAN applications in the automotive environment. It provides local and enhanced remote wake-up capabilities.	Click Here

<< BACK to BLOCK DIAGRAM

Remote Controller Power Management

Popular Products	Description	Product Web Page
MIC45205	The MIC45205 is a synchronous step-down regulator module, featuring a unique adaptive ON-time control architecture. The module incorporates a DC-to-DC controller, power MOSFETs, bootstrap diode, bootstrap capacitor, and an inductor in a single package; simplifying the design and layout process for the end user.	Click Here
MIC33153	The MIC33153 is a high-efficiency 4MHz 1.2A synchronous buck regulator with an internal inductor, HyperLight Load® mode, Power Good (PG) output indicator, and programmable soft start. HyperLight Load® provides very high efficiency at light loads and ultra-fast transient response which makes the MIC33153 perfectly suited for supplying processor core voltages.	Click Here
MIC94305	The MIC94305 is an integrated load switch that incorporates Ripple Blocker™ active filter technology. The MIC94305 provides high-frequency ripple attenuation (switching noise rejection) for applications where switching noise cannot be tolerated by sensitive downstream circuits, such as RF applications.	Click Here

<< BACK to BLOCK DIAGRAM

Remote Controller Power Filter

Popular Products	Description	Product Web Page
MIC94305	The MIC94305 is an integrated load switch that incorporates Ripple Blocker™ active filter technology. The MIC94305 provides high-frequency ripple attenuation (switching noise rejection) for applications where switching noise cannot be tolerated by sensitive downstream circuits, such as RF applications.	Click Here

<< BACK to BLOCK DIAGRAM

Remote Controller Flash Memory

Popular Products	Description	Product Web Page
SST26VF032B	The SST26VF032B 32 Mbit Serial Quad I/O (SQI) flash device utilizes a 4-bit multiplexed I/O serial interface to boost performance while maintaining the compact form factor of standard serial flash devices	Click Here

<< BACK to BLOCK DIAGRAM

Remote Controller MCU

Popular Products	Description	Product Web Page
ATSAMS70	The SMART SAM S series of general-purpose Flash microcontrollers (MCUs) are based on the high-performance 32-bit ARM® Cortex®-M7 RISC processors with floating point unit (FPU). They operate at a maximum speed of 300MHz and feature up to 2048KB of Flash, dual 16KB of cache memory and up to 384KB of SRAM. An extensive peripheral set includes High Speed USB Host and Device plus phy, up to 8 UARTs, I2S, SD/MMC interface, a CMOS camera interface, system control and analog interfaces.	Click Here

<< BACK to BLOCK DIAGRAM

Remote Controller Fanout Buffer

Popular Products	Description	Product Web Page
PL133-XX	The PL133 are a family ofan advanced fanout buffers designed for high performance, low-power, small form-factor applications. The PL133-XX accepts a reference clock input of 1MHz to 150MHz and produces multipleoutputs of the same frequency. Reference clock inputs may be LVCMOS or sine-wave signals (the inputs are internally AC-coupled).	Click Here

<< BACK to BLOCK DIAGRAM